CONSTRUCTION AND SAFETY NOTES

SEQUENCE OF CONSTRUCTION

TO MINIMIZE DISRUPTIONS TO AIRPORT OPERATIONS, CONSTRUCTION OPERATIONS MUST BE CONTROLLED THROUGHOUT THE PROJECT'S DURATION AND WORK MUST BE COMPLETED EXPEDITIOUSLY. THE CONTRACTOR IS TO EITHER FOLLOW THE CONSTRUCTION STAGING PLAN PROVIDED OR PREPARE AND FOLLOW AN ALTERNATIVE STAGING PLAN THAT MEETS PLAN REQUIREMENTS. THE ALTERNATE STAGING PLAN MUST BE SATISFACTORY TO THE PROJECT ENGINEER AND THE AIRPORT OWNER. THE CONTRACTOR SHALL EXPEDITE WORK AT THOSE STAGES OR PORTIONS OF STAGES WHEN ACTIVE RUNWAYS, TAXIWAYS, APRONS, ROADWAYS OR PARKING LOTS MUST BE CLOSED OR REDUCED IN SIZE TO MINIMIZE THE LENGTH OF TIME THAT AIRPORT OPERATIONS ARE RESTRICTED.

LATHING AND WARNING TAPE

THE PROJECT WILL REQUIRE THE PLACEMENT OF LATHING AND WARNING TAPE TO DELINEATE THE CONSTRUCTION AREA. IT SHALL BE THE CONTRACTOR'S RESPONSIBILITY TO PROVIDE, PLACE AND MAINTAIN LATHING AND WARNING TAPE AS SHOWN ON THE CONSTRUCTION STAGING PLAN, AND DETAIL A, THIS SHEET, AND AS DIRECTED BY THE RESIDENT ENGINEER AND THE AIRPORT OWNER. THE CONTRACTOR WILL FURNISH, PLACE, MAINTAIN AND RELOCATE THE LATHING AND WARNING TAPE AS REQUIRED. THE COST OF THESE ITEMS, AND THEIR MAINTENANCE, IS TO BE INCIDENTAL TO THE CONTRACT.

RUNWAY CLOSURE

THE PROJECT WILL REQUIRE THE PLACEMENT OF RUNWAY CLOSURE MARKINGS, SEE STAGING PLAN. TO MINIMIZE DISRUPTION TO AIRCRAFT OPERATIONS ASSOCIATED WITH THE RUNWAY CLOSURE, CONSTRUCTION WORK MUST BE COMPLETED EXPEDITIOUSLY. RUNWAY CLOSINGS SHALL ONLY BE PERMITTED BY PRIOR AUTHORIZATION OF THE RESIDENT ENGINEER AND THE AIRPORT OWNER.

IT WILL BE THE CONTRACTOR'S RESPONSIBILITY TO INSTALL AND MAINTAIN RUNWAY CLOSURE MARKERS AT THE LOCATIONS SHOWN IN THE STAGING PLAN, SEE DETAIL D, THIS SHEET, AND AS DIRECTED BY THE RESIDENT ENGINEER AND AIRPORT OWNER. THE COST OF PLACING AND RELOCATING THESE ITEMS, AND THEIR MAINTENANCE, IS TO BE INCIDENTAL TO THE CONTRACT.

THE AIRPORT OWNER WILL DE-ENERGIZE ASSOCIATED AIRFIELD LIGHTING WHEN THE RUNWAY IS CLOSED.

TEMPORARY BARRICADES ON AIRFIELD

THE PROJECT WILL ALSO REQUIRE THE OCCASIONAL, TEMPORARY CLOSING OF SEGMENTS OF ACTIVE TAXIWAYS AND APRONS. AIRFIELD BARRICADES WILL BE REQUIRED FOR ALL TAXIWAY AND APRON CLOSURES. TO MINIMIZE DISRUPTION TO AIRCRAFT OPERATIONS ASSOCIATED WITH THESE REQUIREMENTS, CONSTRUCTION WORK MUST BE COMPLETED EXPEDITIOUSLY.

OPEN TRENCHES, EXCAVATIONS AND STOCKPILED MATERIAL AT THE CONSTRUCTION SITE SHALL ALSO BE DELINEATED WITH THE USE OF BARRICADES DURING HOURS OF RESTRICTED VISIBILITY AND/OR DARKNESS.

IT WILL BE THE CONTRACTOR'S RESPONSIBILITY TO FURNISH, PLACE AND MAINTAIN BARRICADES AS SHOWN IN THE STAGING PLAN, AND DETAIL B, THIS SHEET, AND AS DIRECTED BY THE RESIDENT ENGINEER AND AIRPORT OWNER. THE COST OF THESE ITEMS, AND THEIR MAINTENANCE, IS TO BE INCIDENTAL TO THE CONTRACT.

AIRFIELD OPERATIONAL SAFETY DURING CONSTRUCTION

ALL CONSTRUCTION TRAFFIC AND PERSONNEL SHALL REMAIN WITHIN THE CONSTRUCTION LIMIT LINE SHOWN ON THE STAGING PLAN FOR THE STAGE CURRENTLY UNDER CONSTRUCTION. CONTRACTOR'S PERSONNEL AND EQUIPMENT MUST REMAIN AT LEAST 125 FEET FROM THE CENTERLINE OF ACTIVE RUNWAYS, 700 FEET FROM THE END OF ACTIVE RUNWAYS (500 FEET IF STAGED CONSTRUCTION DISPLACEMENT IS IMPLEMENTED), 50 FEET FROM THE CENTERLINE OF ACTIVE TAXIWAYS, AND 10 FEET FROM THE EDGE OF ACTIVE APRONS.

WHEN IT IS NECESSARY FOR CONSTRUCTION VEHICLES TO OPERATE ON OR WITHIN THESE LIMITS, THE RUNWAY, TAXIWAYS OR APRON MUST BE CLOSED. THE CONTRACTOR WILL PROVIDE POSITIVE CONTROL OF CONSTRUCTION VEHICLES USING RADIO-EQUIPPED FLAGGERS. ALL CONTRACTOR'S EQUIPMENT USED IN ACTIVE AIRPORT OPERATIONS AREAS SHALL BE EQUIPPED WITH A FAA-STANDARD FLAG, AS REFERENCED IN FAA AC 150/5370-2, CURRENT ISSUE. AIRCRAFT SHALL HAVE THE RIGHT-OF-WAY. CONSTRUCTION VEHICLES SHALL NOT CROSS AN ACTIVE RUNWAY. THE COST OF ALL TRAFFIC CONTROL, BOTH WITHIN AND OUTSIDE OF AIRPORT OPERATIONS AREAS, IS TO BE INCIDENTAL TO THE CONTRACT.

WHEN NOT IN USE AND DURING NONWORKING HOURS, CONTRACTOR'S EQUIPMENT SHALL BE PARKED WITHIN THE CONTRACTOR'S EQUIPMENT STORAGE AND PARKING AREAS. THE EQUIPMENT STORAGE AND PARKING AREAS ARE TO BE LOCATED AS SHOWN ON THE STAGING PLAN. THE CONTRACTOR WILL BE RESPONSIBLE FOR MAINTAINING THE CONSTRUCTION ENTRANCE IN GOOD CONDITION. THE COST OF MAINTAINING THE CONSTRUCTION ENTRANCE IS TO BE INCIDENTAL TO THE CONTRACT.

AT NO TIME SHALL THE CONTRACTOR OPERATE OR PARK EQUIPMENT SO AS TO OBSTRUCT AN ACTIVE RUNWAY APPROACH SURFACE.

BEFORE REOPENING TEMPORARILY CLOSED RUNWAYS, TAXIWAYS OR ROADWAYS, THE CONTRACTOR SHALL INSPECT AND CLEAN, AS NECESSARY, THE PAVEMENT TO ASSURE THAT NO MATERIALS OR OBJECTS THAT MAY DAMAGE AIRCRAFT OR VEHICLES REMAIN. ANY REQUIRED CLEANING SHALL BE TO THE SATISFACTION OF THE RESIDENT ENGINEER AND AIRPORT OWNER AND IS INCIDENTAL TO THE CONTRACT.

CONSTRUCTION EQUIPMENT AND MATERIALS HAUL ROUTE (WEST)

A CONSTRUCTION EQUIPMENT AND MATERIALS HAUL ROUTE IS TO BE CONSTRUCTED AT THE LOCATION SHOWN ON THE SITE PLAN AND IN ACCORDANCE WITH DETAIL C, THIS SHEET. ALL CONTRACTORS VEHICLES SHALL USE THIS AS SITE ACCESS FOR WORK ON TAXIWAY A. THE CONTRACTOR WILL BE RESPONSIBLE FOR MAINTAINING THE HAUL ROAD IN GOOD CONDITION. THE COST OF CONSTRUCTING AND MAINTAINING THE HAUL ROAD IS TO BE INCLUDED IN ITEM AR150540.

NOTIFICATIONS BY CONTRACTOR

THE CONTRACTOR SHALL NOTIFY THE RESIDENT ENGINEER AND AIRPORT OWNER 7 DAYS IN ADVANCE OF THE CONTRACTOR'S CLOSING OF ACTIVE RUNWAYS, TAXIWAYS AND APRONS. THE DATE, TIME AND SCHEDULED DURATION OF THE CLOSING MUST BE APPROVED BY THE RESIDENT ENGINEER AND THE AIRPORT OWNER. THE CONTRACTOR SHALL NOTIFY THE RESIDENT ENGINEER AND AIRPORT OWNER 72 HOURS IN ADVANCE OF THE CONTRACTOR'S CLOSING OF OTHER ACTIVE ROADWAYS, AIRFIELD OR ROADWAY LIGHTING CIRCUITS, OR OTHER AIRPORT FACILITIES.

CONTRACTOR'S USE OF SITE

THE CONTRACTOR SHALL NOT OPERATE WITHIN, ENCROACH UPON OR OBSTRUCT AIRPORT OPERATIONAL AREAS, INCLUDING ACTIVE RUNWAY, TAXIWAYS AND APRON SAFETY AREAS, OBJECT AND OBSTACLE FREE ZONES, RUNWAY PROTECTION ZONES AND AIRPORT IMAGINARY SURFACES AS DEFINED IN FEDERAL AVIATION REGULATIONS (FAR) PART 77, "OBJECTS AFFECTING NAVIGABLE AIRSPACE".

UTILITY OUTAGES AND SHUTDOWNS

THE CONTRACTOR SHALL PROVIDE 72 HOURS PRIOR NOTICE OF ANY OUTAGES OR SHUTDOWNS TO THE OWNER AND THE AGENCY OWNING THE AFFECTED UTILITY. THE CONTRACTOR SHALL PROVIDE ANY TEMPORARY CONNECTIONS OR OTHER MEASURES AS MAY BE REQUIRED TO MAINTAIN SERVICE AS MAY BE REQUIRED BY THE OWNING AGENCY AT NO COST TO THE OWNER.

AVAILABLE SOIL DATA

DETAILED SOIL TEST MATERIAL FOR THE APRON AREA IS AVAILABLE UPON REQUEST. SOIL BORINGS ARE INCLUDED WITH THE PLANS. ADDITIONAL BORING INFORMATION AND INFORMATION ON SOIL TESTS IS MADE AVAILABLE SOLELY FOR THE CONVENIENCE OF THE BIDDER AND/OR CONTRACTOR. NEITHER THE OWNER NOR THE PROJECT ENGINEER ASSUMES ANY RESPONSIBILITY WHATSOEVER IN RESPECT TO THE ACCURACY OR SUFFICIENCY OF THE AVAILABLE INFORMATION AND THERE IS NO EXPRESSED OR IMPLIED GUARANTEE THAT THE CONDITIONS DESCRIBED IN THE SOIL TEST DATA ARE REPRESENTATIVE OF ALL CONDITIONS THAT MAY BE ENCOUNTERED.

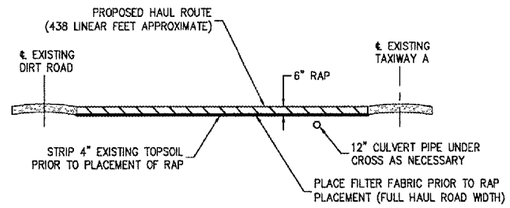

CROSS SECTION

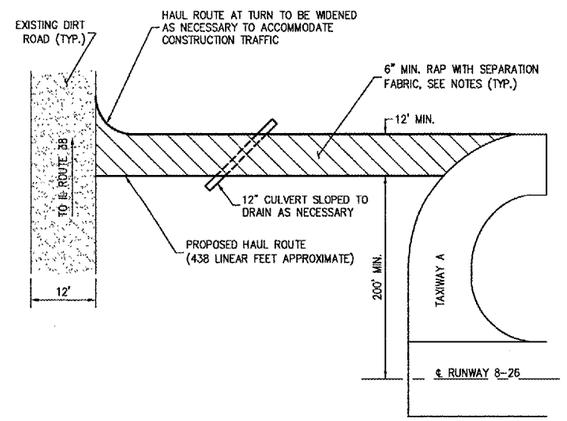

PLAN

NOTES:

1. STRIP 4" OF EXISTING TOPSOIL PRIOR TO PLACEMENT OF RAP.
2. REPAIR RUTS AND HOLES OF EXISTING DIRT ROAD PRIOR TO INSTALLATION OF HAUL ROUTE. COST IS INCIDENTAL TO ITEM AR150540.
3. RAP SHALL MEET SPECIFICATIONS, SEE SPECIAL PROVISIONS. CA-6 OR RECYCLED CONCRETE EQUIVALENT MAY BE USED, TWO INCH MAXIMUM SIZE.
4. HAUL ROUTE THICKNESS SHALL NOT BE LESS THAN SIX INCHES.
5. HAUL ROUTE WIDTH SHALL BE 12 FEET MINIMUM.
6. SURFACE WATER FLOWING OR DIVERTED SHALL BE CARRIED IN CULVERT (CMP, STELL OR HDPE).
7. PLACE SEPARATION FABRIC PRIOR TO RAP PLACEMENT FOR FULL WIDTH OF HAUL ROUTE. FABRIC TO BE MIRAFI 160N OR APPROVED EQUAL, COST INCIDENTAL TO ITEM AR150540.
8. THE HAUL ROUTE SHALL BE MAINTAINED IN A CONDITION WHICH WILL PREVENT TRACKING OR FLOWING OF SEDIMENT ONTO PUBLIC RIGHT-OF-WAYS. THIS MAY REQUIRE PERIODIC TOP DRESSING WITH ADDITIONAL RAP AS CONDITIONS DEMAND AND REPAIR AND/OR CLEAN OUT OF ANY MEASURE USED TO TRAP SEDIMENT. ALL SEDIMENT SPILLED, DROPPED, WASHED OR TRACKED ONTO PUBLIC RIGHT-OF-WAYS MUST BE REMOVED IMMEDIATELY.
9. PERIODIC INSPECTION SHALL BE PERFORMED AND REQUIRED MAINTENANCE SHALL BE PROVIDED AFTER EACH RAIN EVENT.
10. HAUL ROUTE TO BE REMOVED AT PROJECT END. AREA TO BE RESTORED AND RESEEDED (SEE LANDSCAPING PLAN) AND LEFT IN A CONDITION SATISFACTORY TO THE RESIDENT ENGINEER. AT RESIDENT ENGINEER'S OPTION, THE HAUL ROUTE CAN REMAIN.
11. COST OF INSTALLING, MAINTAINING, REMOVING AND RESTORING HAUL ROUTE SHALL BE PAID UNDER ITEM AR150540 EXCEPT FOR SEEDING AND MULCHING, PAID UNDER AR901510 AND AR908510. SEEDING AND MULCHING LIMITED TO AREA SPECIFIED ON THE LANDSCAPING PLAN. ADDITIONAL SEEDING AND MULCHING NECESSARY TO RESTORE HAUL ROUTE AREA AT CONTRACTOR'S EXPENSE.

DETAIL C
TAXIWAY A HAUL ROUTE

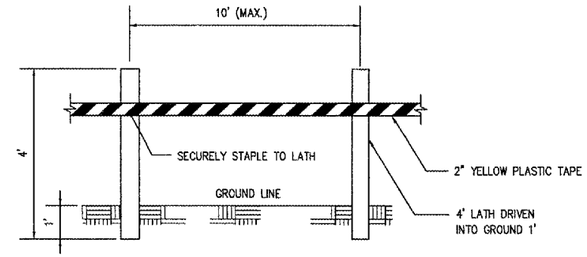

MATERIALS ARE TO BE APPROVED BY ENGINEER PRIOR TO INSTALLATION. COST OF MATERIALS, INSTALLATION, RELOCATION AND MAINTENANCE OF LATHING AND WARNING TAPE IS TO BE INCIDENTAL TO THE CONTRACT.

DETAIL A
LATHING AND WARNING TAPE

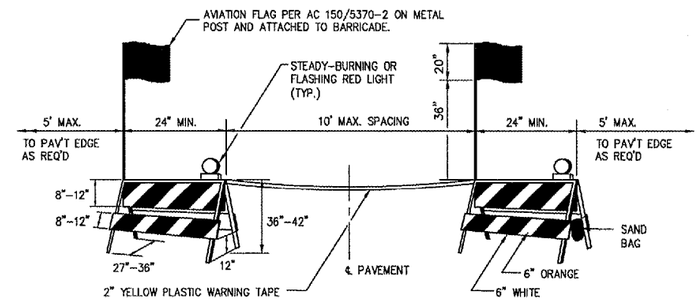

BARRICADES ARE TO BE OF IDOT TYPE I. A STEADY-BURNING OR FLASHING RED LIGHT FACING PASSING TRAFFIC IS TO BE MOUNTED ABOVE THE TOP OF EACH BARRICADE FRAME. THE BARRICADE IS TO BE STABILIZED FROM WIND BY SANDBAGS PLACED ON THE FRAME OR OTHER METHODS APPROVED BY THE RESIDENT ENGINEER. NO PART OF THE REFLECTORIZED PORTION OF THE BARRICADE IS TO BE OBSTRUCTED IN ANY MANNER. COST OF FURNISHING, INSTALLING, RELOCATING AND MAINTAINING BARRICADES IS TO BE INCIDENTAL TO THE CONTRACT.

DETAIL B
PAVEMENT BARRICADES

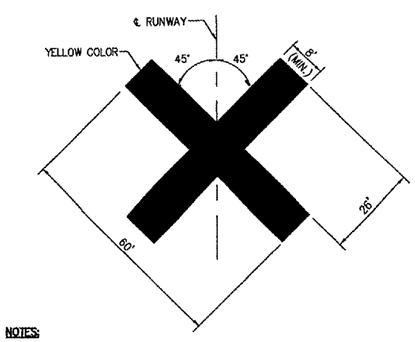

NOTES:

1. THE CONTRACTOR SHALL USE RUNWAY CLOSED MARKERS AS FURNISHED BY THE AIRPORT OWNER. THE AIRPORT HAS TWO (2) VINYL MARKERS.
2. CONTRACTOR SHALL LOCATE THE MARKERS ON TOP OF THE RUNWAY NUMERALS DURING CLOSURE OF THE RUNWAY.
3. MARKERS TO BE SECURED BY CONTRACTOR AS RECOMMENDED BY MANUFACTURER.
4. COST OF INSTALLING, RELOCATING AND MAINTAINING MARKERS SHALL BE INCIDENTAL TO THE CONTRACT.

DETAIL D
TEMPORARY CLOSED RUNWAY MARKER

DETAILS SHOWN ARE NOT TO SCALE

D1021

HANSON
HANSON PROFESSIONAL SERVICES INC.
815 Commerce Drive Suite 200
Oak Brook, Illinois 60523
Telephone: 630.990.3800
Fax: 630.990.3801

City of Dixon
CITY OF DIXON, ILLINOIS
Post Office Box 386
Dixon, Illinois 61021
Telephone: 815.288.1485

DIXON MUNICIPAL AIRPORT
CHARLES R. WALGREEN FIELD

OVERLAY TAXIWAYS A, A1, A2 AND C:
REMOVE AND REPLACE TAXIWAY C1

AIP PROJECT NO. 3-17-0036-B9
IDA PROJECT NO. C73-3549

No.	Drawing Issue Description	Date	By

Date: MARCH 3, 2006

Sheet Title: CONSTRUCTION AND SAFETY NOTES AND DETAILS

843-05B8009 — Project Number
LDH 11/29/05 — Layout By / Date
LDH, KLK 11/29/05 — Designed By / Date
RMH 02/03/06 — Reviewed By / Date
LDH — Drawn By

Sheet No. 4

I:\05CDBS\00843\05B8009\DRAWINGS\SHEETS\04-SAFETY NOTES.DWG MAR 10, 2006 10:09AM KLK