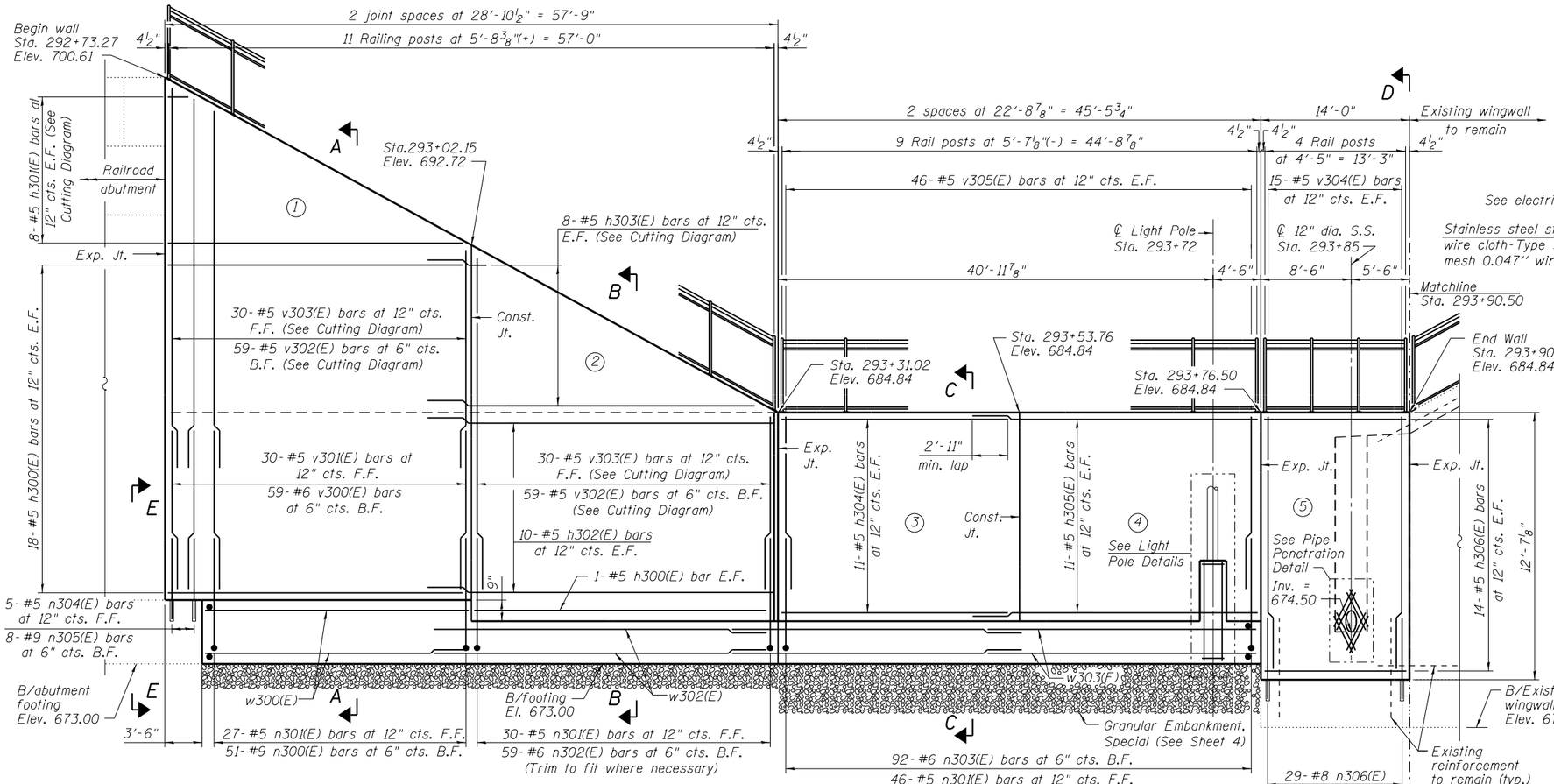

ELEVATION
(Front Face shown)

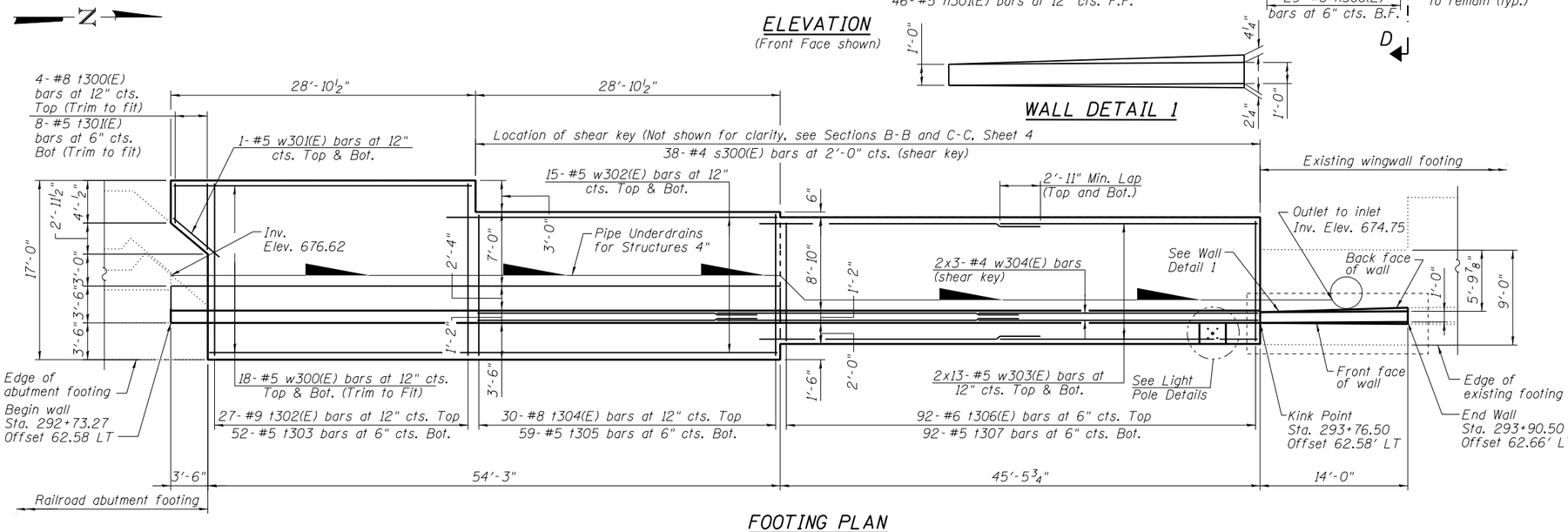

FOOTING PLAN

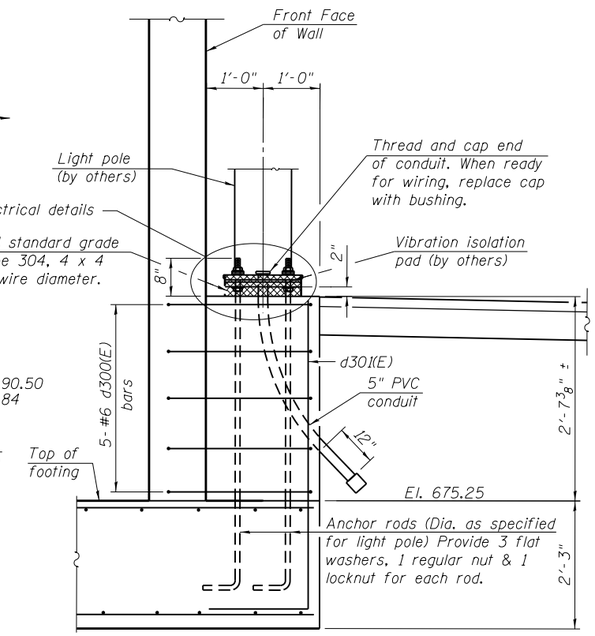

SECTION F-F

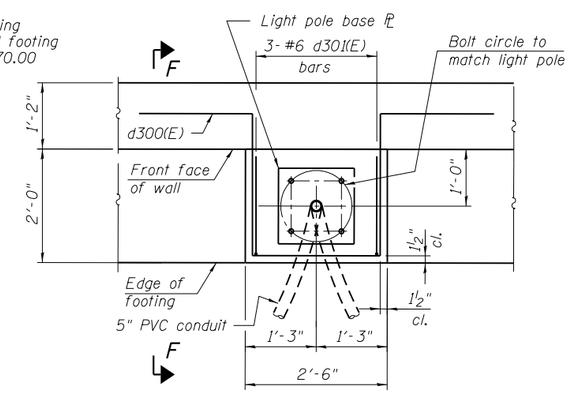

PLAN

Note:
Cost of anchor rods, conduit and ground rods is included with Concrete Structures.

LIGHT POLE DETAILS

LEGEND

(1) = Panel No.

Notes:
Wall stations, offsets and dimensions are measured at front face of wall.
All exposed corners shall have a 1" chamfer.
For Sections and Pipe Penetration Details see Sheet 4.
For Bar Cutting Diagrams and Bill of Material see Sheet 4.

URS
100 S. WACKER DR.
SUITE 500
CHICAGO IL 60606
TEL (312)939-1000
FAX (312)939-9498

FILE NAME = 016Z003-60M62-003-pln.dgn	USER NAME = Anthony.Plutz	DESIGNED - MJL	REVISED -
		CHECKED - MGB	REVISED -
	PLOT SCALE = 12.500 ' / in.	DRAWN - AMV/MJL	REVISED -
	PLOT DATE = 3/13/2013	CHECKED - MGB	REVISED -

STATE OF ILLINOIS
DEPARTMENT OF TRANSPORTATION

RETAINING WALL PLAN AND ELEVATION
STRUCTURE NO. 016-Z003
SHEET NO. 3 OF 7 SHEETS

F.A.P RTE.	SECTION	COUNTY	TOTAL SHEETS	SHEET NO.
330	103R-5	COOK	778	405

CONTRACT NO. 60M62
ILLINOIS FED. AID PROJECT