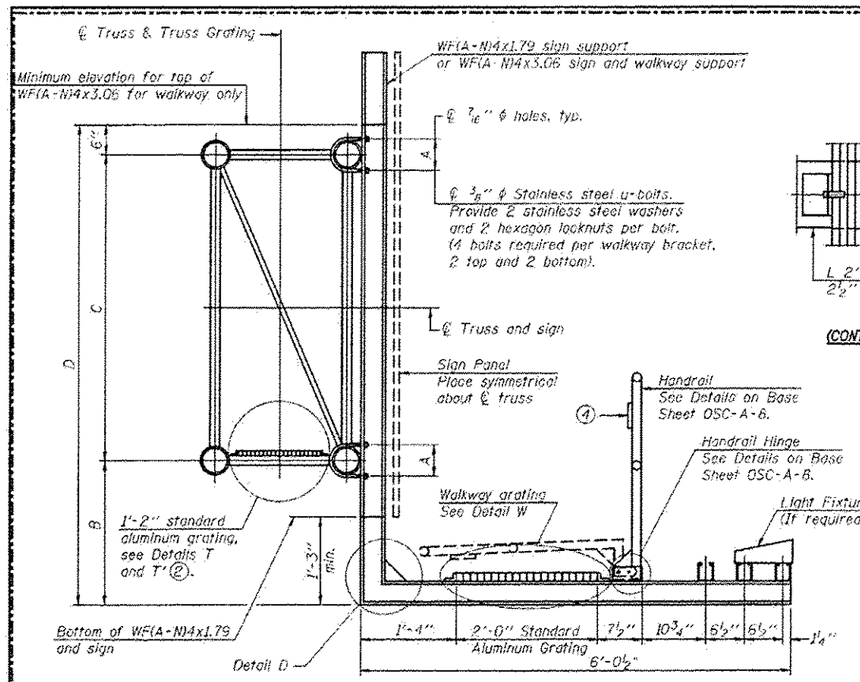

SECTION B-B

Sign shall be even with the top of the bracket, but it may extend no more than 6" above the top of the bracket for field adjustments.

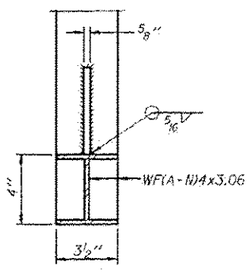

SECTION D-D

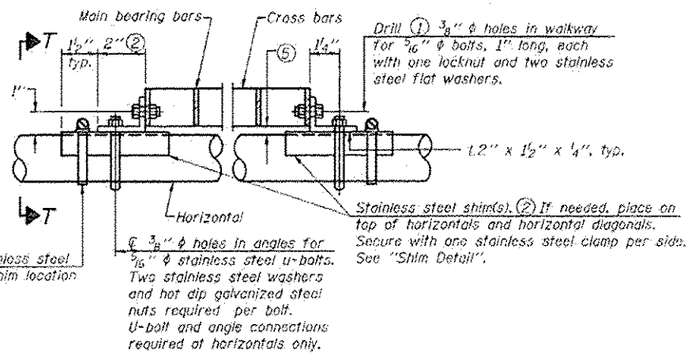

DETAIL T

(Continuous Truss grating)

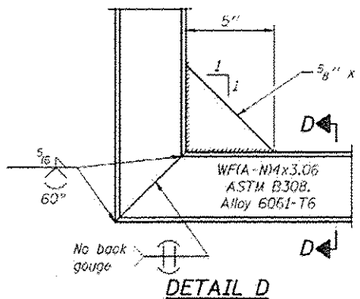

DETAIL D

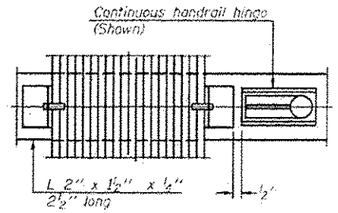

(CONTINUOUS WALKWAY GRATING)

SECTION W-W

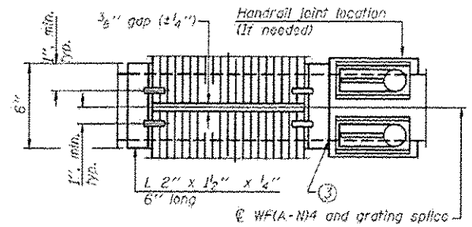

(AT WALKWAY GRATING SPLICE)

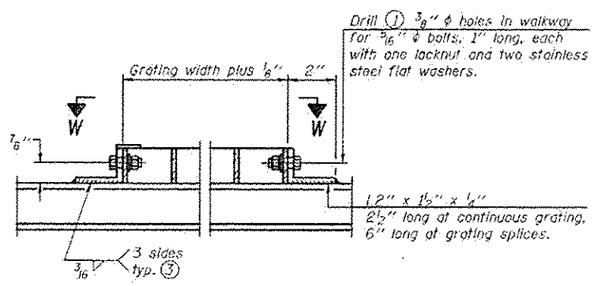

DETAIL W

(Walkway grating)

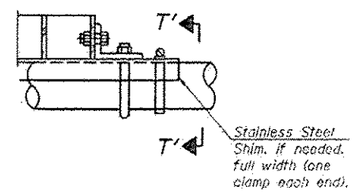

DETAIL T'

(Truss grating splice)

Details not shown same as Detail T.
Alternate materials may be used subject to the Engineer's review and approval.

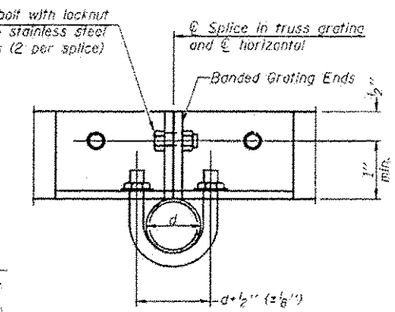

SECTION T'-T'

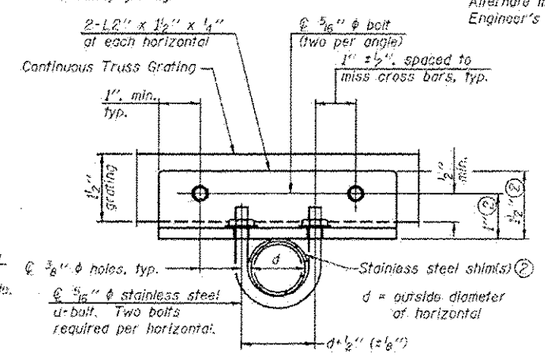

SECTION T-T

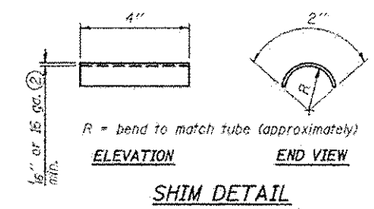

SHIM DETAIL

SPECIFICATIONS FOR STANDARD ALUMINUM GRATING

Main Bearing Bars (MBB) shall be 3/16" x 1½" on 1 3/16" centers and conform to ASTM B221 Alloy 6061-T6.

Cross bars (CB) shall be 3/16" x 1½" on 4" centers and conform to ASTM B221 Alloy 6063-T5 or 6061-T6.

OR

Aluminum Grating with modified "I" sections for main bearing bars shall meet the following requirements:

Main bars shall conform to ASTM B221 Alloy 6061-T6 and have a minimum section modulus equal to 0.0705 in.³ per bar, a depth of 1½", spaced on 1 3/16" centers.

Cross bars shall conform to ASTM B221 Alloy 6063-T5 or T-42 and spaced on 4" centers.

① Drilling holes in grating may be done in shop or field, based on Contractor's preference and subject to accurate alignment.

② Stainless steel shims shall be placed as shown in Detail T. If needed to compensate for alignment variations between horizontal and diagonal pipes beyond adjustment provided by angles. Thicker shims may be used subject to shims performing properly.

③ If Handrail Joint present, weld angle to WF(A-N)4 and ¼" extension bars. (See Base Sheet OSC-A-8.)

④ ℄ ⅛" x ½" x 2" welded to handrail posts to protect locations that contact grating.

⑤ Tube to grating gap may vary from 0 to ½", max. to align walkway, allow for camber, etc.

⑥ Based on actual sign height. Ds, given on OSC-A-1.

Structure Number	Station	A	⑥ B	C	⑥ D
IC016I190R000.6	16+25.00 Ramp 6	8½"	1'-4"	7'-0"	9'-8"

△A ADDED SHEET

OSC-A-7 6-1-12

PATRICK ENGINEERING INC. 4970 VARSITY DRIVE LISLE, IL 60532 patrickengineering.com

USER NAME =	DESIGNED - CPK	REVISED △A 4/1/2013 AY	
	DRAWN - MJP	REVISED	
PLOT SCALE =	CHECKED - JAH	REVISED	
PLOT DATE =	DATE - 2/18/2013	REVISED	

STATE OF ILLINOIS
DEPARTMENT OF TRANSPORTATION

CANTILEVER SIGN STRUCTURES – WALKWAY DETAILS
ALUMINUM TRUSS & STEEL POST

SCALE: SHEET NO. SGN-3G OF 10 SHEETS

F.A.U RTE.	SECTION	COUNTY	TOTAL SHEETS	SHEET NO.
2746	16168	COOK	404	147G
		CONTRACT NO. 60J14		
		ILLINOIS FED. AID PROJECT		