F.A. RTE.	SECTION	COUNTY	TOTAL SHEETS	SHEET NO.
2110	17-12082-01-BR	KANE	88	1
		ILLINOIS	CONTRACT NO. 61K26	

04-25-2025 LETTING ITEM 166

STATE OF ILLINOIS
DEPARTMENT OF TRANSPORTATION
PLANS FOR PROPOSED
FEDERAL AID HIGHWAY

FOR INDEX OF SHEETS, SEE SHEET NO. 2

TRAFFIC DATA:

MUIRHEAD ROAD
- ADT = 2,400
- POSTED SPEED LIMIT = 45 MPH
- FUNCTIONAL CLASSIFICATION = LOCAL ROAD

PLATO ROAD
- ADT = 3,450
- POSTED SPEED LIMIT = 50 MPH
- FUNCTIONAL CLASSIFICATION = MINOR ARTERIAL

T.R. 2110 /MUIRHEAD ROAD OVER CHICAGO, CENTRAL AND PACIFIC RAILROAD
PLATO TOWNSHIP HIGHWAY DISTRICT
SECTION NO: 17–12082–01–BR
PROJECT NO: ZU0Q(834)
BRIDGE RECONSTRUCTION
KANE COUNTY
C–91–020–18

LOCATION OF SECTION INDICATED THUS:–

FULL SIZE PLANS HAVE BEEN PREPARED USING STANDARD ENGINEERING SCALES. REDUCED SIZED PLANS WILL NOT CONFORM TO STANDARD SCALES. IN MAKING MEASUREMENTS ON REDUCED PLANS, THE ABOVE SCALES MAY BE USED.

J.U.L.I.E.
JOINT UTILITY LOCATION INFORMATION FOR EXCAVATION
1–800–892–0123
OR 811

R. 8 E. 3RD., P.M.

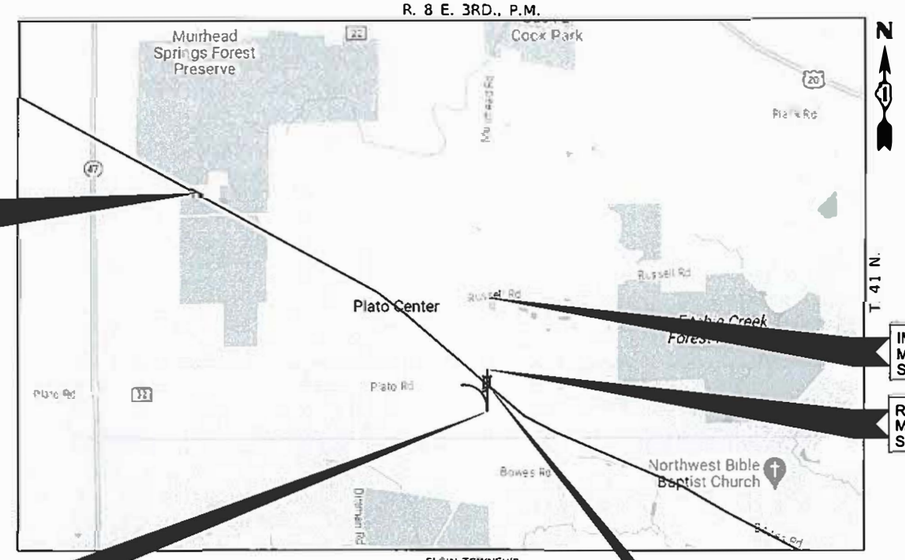

CHICAGO, CENTRAL AND PACIFIC RAILROAD

IMPROVEMENT ENDS MUIRHEAD ROAD STA. 44+85.00

RECONSTRUCTION ENDS MUIRHEAD ROAD STA. 22+80.00

IMPROVEMENT BEGINS MUIRHEAD ROAD STA. 15+11.58

ELGIN TOWNSHIP

GROSS LENGTH = 2973.42 FT. = 0.563 MILE

NET LENGTH = 2973.42 FT. = 0.563 MILE

STA.
STEEL W-BEAM SUPERSTRUCTURE ON INTEGRAL ABUTMENTS AND EXISTING CONCRETE PIERS
5 SPANS: 202'-2" BK-BK ABUT.
42'-0" RDWY., SKEW = 0°
EXISTING STRUCTURE NO. 045-3132

AGENCY RESPONSIBLE FOR LETTING

LOCAL AGENCY
PLATO TOWNSHIP

APPROVED 12-1-23
HIGHWAY COMMISSIONER

PASSED January 3, 2024
DATE

DISTRICT 1 ENGINEER OF LOCAL ROADS & STREETS

RELEASING FOR BID BASED ON LIMITED REVIEW January 3, 2024
DATE

IR
REGIONAL ENGINEER

DATE: 01/02/2024
LICENSED PROFESSIONAL ENGINEER ANDRE A. JUNGERMANN 062-072501 STATE OF ILLINOIS
EXPIRES: 11/30/2025

HAMPTON, LENZINI AND RENWICK, INC.
CIVIL ENGINEERS · STRUCTURAL ENGINEERS · LAND SURVEYORS
1707 N RANDALL ROAD, SUITE 100
ELGIN, ILLINOIS 60123
847.697.6700 www.hlrengineering.com
184.000959
ILLINOIS PROFESSIONAL DESIGN FIRM LS / PE / SE CORPORATION

PROJECT NUMBER 22.0816.130 DATE 1/3/2024

PROJECT ENGINEER
PROJECT MANAGER

CONTRACT NO. 61K26

PRINTED BY THE AUTHORITY OF THE STATE OF ILLINOIS

FEDERAL AID PROGRAM ENGINEER: CARMEN E. RAMOS, PE SCHAUMBURG, IL

INDEX OF SHEETS

SHEET NO.	DESCRIPTION
1.	TITLE SHEET
2.	INDEX OF SHEETS, HIGHWAY STANDARDS AND GENERAL NOTES
3-7.	SUMMARY OF QUANTITIES
8-9.	TYPICAL CROSS SECTIONS
10-12.	SCHEDULE OF QUANTITIES
13-16.	ALIGNMENT, TIES AND BENCHMARKS
17-21.	PLAN AND PROFILE
22.	DETOUR PLAN
23-26.	EROSION CONTROL PLANS
27.	GRADING PLAN
28.	DETAIL PLAN
29-32.	PAVEMENT MARKING PLANS
33-67.	STRUCTURAL PLANS
68-84.	STATION CROSS SECTIONS
85-88.	IDOT DISTRICT 1 DETAILS

HIGHWAY STANDARDS

000001-08	STANDARD SYMBOLS, ABBREVIATIONS, AND PATTERNS
001001-02	AREAS OF REINFORCEMENT BARS
001006	DECIMAL OF AN INCH AND OF A FOOT
280001-07	TEMPORARY EROSION CONTROL SYSTEMS
420406	PAVEMENT CONNECTOR (HMA) FOR BRIDGE APPROACH SLAB
515001-04	NAME PLATE FOR BRIDGES
542301-03	PRECAST REINFORCED CONCRETE FLARED END SECTION
601001-05	PIPE UNDERDRAIN
610001-09	SHOULDER INLET WITH CURB
630001-13	STEEL PLATE BEAM GUARDRAIL
630201-07	PCC-HMA STABILIZATION AT STEEL PLATE BEAM GUARDRAIL
630301-09	SHOULDER WIDENING FOR TYPE 1 GUARDRAIL TERMINALS
631031-18	TRAFFIC BARRIER TERMINAL, TYPE 6
701001-02	OFF-RD OPERATIONS, 2L, 2W, MORE THAN 15' (4.5mm) AWAY
701006-05	OFF-RD OPERATIONS, 2L, 2W, 15' TO 24" FROM PAVEMENT EDGE
701201-05	LANE CLOSURE, 2L, 2W, DAY ONLY, FOR SPEEDS ≥ 45 MPH
701301-04	LANE CLOSURE, 2L, 2W, SHORT TIME OPERATIONS
701306-04	LANE CLOSURE, 2L, 2W, SLOW MOVING OPERATIONS DAY ONLY, FOR SPEEDS ≥ 45 MPH
701311-03	LANE CLOSURE, 2L, 2W, MOVING OPERATIONS - DAY ONLY
701326-04	LANE CLOUSRE, 2L, 2W, PAVEMENT WIDENING, FOR SPEEDS ≥ 45 MPH
701501-06	URBAN LANE CLOSURE, 2L, 2W, UNDIVIDED
701901-10	TRAFFIC CONTROL DEVICES
720001-01	SIGN PANEL MOUNTING DETAILS
720006-04	SIGN PANEL ERECTION DETAILS
720011-01	METAL POSTS FOR SIGNS, MARKERS AND DELINEATORS
728001-01	TELESCOPING STEEL SIGN SUPPORT
782006-01	GUARDRAIL AND BARRIER WALL REFLECTOR MOUNTING DETAILS

DISTRICT 1 STANDARDS

BD-51	BENCHING DETAIL FOR EMBANKMENT WIDENING
TC-10	TRAFFIC CONTROL AND PROTECTION FOR SIDE ROADS, INTERSECTIONS, AND DRIVEWAYS
TC-13	DISTRICT ONE TYPICAL PAVEMENT MARKINGS
TC-16	SHORT TERM PAVEMENT MARKING LETTERS AND SYMBOLS

GENERAL NOTES

SPECIFICATIONS, STANDARDS AND SPECIAL PROVISIONS

1. ALL CONSTRUCTION SHAL BE DONE IN ACCORDANCE WITH THE "STANDARD SPECIFICATIONS FOR ROAD AND BRIDGE CONSTRUCTION,'' ADOPTED JANUARY 1, 2022 (HEREIN AFTER REFERRED TO AS THE STANDARD SPECIFICATIONS); THE "SUPPLIMENTAL SPECIFICATIONS AND RECURRING SPECIAL PROVISIONS," ADOPTED JANUARY 1, 2024; THE LATEST EDITION OF THE "ILLINOIS MANUAL ON UNIFORM TRAFFIC CONTROL DEVICES FOR STREETS AND HIGHWAYS"; THE "DETAILS" IN THE PLANS AND THE "SPECIAL PROVISIONS" INCLUDED IN THE CONTRACT DOCUMENTS.

2. ANY REFERENCE TO STANDARDS THROUGHOUT THE PLANS OR SPECIAL PROVISIONS SHALL BE INTERPRETED AS THE LATEST STANDARD OF THE DEPARTMENT.

3. ALL TRAFFIC CONTROL AND OTHER ADVISORY SIGNS NEEDED FOR CONSTRUCTION ARE TO BE FURNISHED BY THE CONTRACTOR IN ACCORDANCE WITH ARTICLE 107.14 OF THE STANDARD SPECIFICATIONS.

4. THE FOLLOWING RATES OF APPLICATION HAVE BEEN USED IN CALCULATING THE PLAN QUANTITES:

AGGREGATE BASE COURSE AND SHOULDERS	2.05 TONS/CU. YD.
POROUS GRANULAR EMBANKMENT	1.50 TONS/CU. YD.

5. THE SUBGRADE STABILITY SHALL BE VERIFIED BY PROOF ROLLING WITH A FULLY LOADED TANDEM-AXLE TRUCK.

6. GEOTECHNICAL FABRIC FOR GROUND STABILIZATION AND/OR AGGREGATE SUBGRADE IMPROVEMENT (CU YD) HAVE BEEN PROVIDED FOR USE AT THE LOCATIONS INDICATED FOR SOILS THAT TEND TO BE UNSTABLE AND/OR UNSUITABLE. THE ACTUAL NEED FOR REMOVAL AND REPLACEMENT WITH ABOVE ITEM WILL BE DETERMINED IN THE FIELD AT THE TIME OF CONSTRUCTION BY THE GEOTECHNICAL ENGINEER. ALL POTENTIALLY UNSTABLE SOILS SHOULD BE TESTED WITH A STATIC OR DYNAMIC CONE PENETROMETER AND TREATED IN ACCORDANCE WITH ARTICLE 301.04 OF THE SSRBC AND IDOT SUBGRADE STABILITY MANUAL. IF UNSTABLE AND/OR UNSUITABLE SOILS ARE NOT ENCOUNTERED, THEN THE QUANTITY SHALL BE DEDUCTED AND NO ADDITIONAL COMPENSATION WILL BE DUE TO THE CONTRACTOR.

7. ANY AGGREGATE SUBGRADE IMPROVEMENT CONTAMINATED AND/OR DAMAGED BY THE CONTRACTOR'S VEHICLES AND/OR EQUIPMENTS IS TO BE REMOVED AND REPLACED AS DIRECT BY THE ENGINEER AT CONTRACTOR EXPENSE.

8. THE AGGREGATE GRADATION FOR THE AGGREGATE SUBGRADE IMPROVEMENT 12" LOWER LIFT SHALL BE CS 1 OR RR 1.

9. PIPE UNDERDRAINS SHALL BE INSTALLED ACCORDING TO SECTION 601 OF THE SSRBC AND STANDARD 601001,05. TOP OF PIPE UNDERDRAINS SHALL BE PLACED MINIMUM 6" BELOW THE AGGREGATE SUBGRADE IMPROVEMENT LAYER. THE COST OF MAKING PIPE UNDERDRAINS CONNECTIONS TO DRAINAGE STRUCTURES SHALL BE INCLUDED IN THE COST OF THE PIPE UNDERDRAINS.

10. BACKFILLING STORM SEWER CONSTRUCTED UNDER THE ROADWAY SPECIFIED UNDER ART. 550.07(b,c) OF THE SSRBC WILL NOT BE ALLOWED.

11. IT IS THE CONTRACTORS SOLE RESPONSIBLILTY TO COORDINATE WITH THE CC&P RAILROAD WHENEVER CONSTRUCTION ACTIVITY IS WITHIN 25 FEET OF THE RR ROW. THE CONTRACTOR SHALL RETAIN FLAGMEN EMPLOYED AND DESIGNATED BY THE CC&P RAILROAD TO MONITOR ONCOMING TRAIN TRAFFIC, AND ADVISE THE CONTRACTOR PERSONNEL WHEN ACTIVITY ON OR NEAR THE RAILROAD ROW MAY PROCEED. THIS ITEM WILL BE PAID FOR ACCORDING TO ARTICLE 107.12 AND WILL BE REIMBURSED ACCORDING TO ARTICLE 109.05.

COMMITMENTS

LIST OF ALL COMMITMENTS

1. NRR TREE REMOVAL RESTRICTION: TREES SHALL NOT BE CLEARED BETWEEN APRIL 1 AND SEPTEMBER 30. TREES IN THE RIGHT-OF-WAY CAN BE REMOVED OR TRIMMED BECAUSE OF SAFETY CONCERNS AT ANY TIME.

SUMMARY OF QUANTITIES

ITEM NO.	ITEM	UNIT	TOTAL QUANTITY	CONSTRUCTION CODE 0004 ROADWAY	CONSTRUCTION CODE 0010 STRUCTURES	CONSTRUCTION CODE 0042 TRAINEES	NON PARTICIPATING 100% LOCAL 0005
20200100	EARTH EXCAVATION	CU YD	307	239			68
20201200	REMOVAL AND DISPOSAL OF UNSUITABLE MATERIAL	CU YD	41	41			
20400800	FURNISHED EXCAVATION	CU YD	3122	3122			
20800150	TRENCH BACKFILL	CU YD	4.1	4.1			
21001000	GEOTECHNICAL FABRIC FOR GROUND STABILIZATION	SQ YD	44.4	44.4			
21101615	TOPSOIL FURNISH AND PLACE, 4"	SQ YD	3294	3294			
25000210	SEEDING, CLASS 2A	ACRE	0.7	0.7			
25000400	NITROGEN FERTILIZER NUTRIENT	POUND	64	64			
25000500	PHOSPHORUS FERTILIZER NUTRIENT	POUND	64	64			
25000600	POTASSIUM FERTILIZER NUTRIENT	POUND	64	64			
25100630	EROSION CONTROL BLANKET	SQ YD	3294	3294			
28000400	PERIMETER EROSION BARRIER	FOOT	1918	1918			
28000500	INLET AND PIPE PROTECTION	EACH	2	2			
28100105	STONE RIPRAP, CLASS A3	SQ YD	62.8	62.8			
30300112	AGGREGATE SUBGRADE IMPROVEMENT 12"	SQ YD	3379	3152			227
40200900	AGGREGATE SURFACE COURSE, TYPE B	CU YD	7.7	7.7			
40201000	AGGREGATE FOR TEMPORARY ACCESS	TON	29.5	29.5			
40600275	BITUMINOUS MATERIALS (PRIME COAT)	POUND	649.9	649.9			
40600290	BITUMINOUS MATERIALS (TACK COAT)	POUND	3788.2	1067.7			2720.5
40600370	LONGITUDINAL JOINT SEALANT	FOOT	3235	1030			2205

* SPECIALTY ITEMS

MODEL: General Notes 1
FILE NAME: P:\2023\23061\Cad\02 Parkin\Cadd_Sheets\23061-sht\SCO-01.dgn

HAMPTON, LENZINI AND RENWICK, INC.
ELGIN, ILLINOIS 60123
ILLINOIS PROFESSIONAL DESIGN FIRM 184-001153

USER NAME = djungemann	DESIGNED -	REVISED -	
	DRAWN -	REVISED -	
PLOT SCALE = 0.16666667 '/ in.	CHECKED -	REVISED -	
PLOT DATE = 12/16/2023	DATE -	REVISED -	

PLATO TOWNSHIP
ROAD DISTRICT

MUIRHEAD ROAD OVER CHICAGO CENTRAL AND PACIFIC RAILROAD
SUMMARY OF QUANTITIES

SCALE: | SHEET OF SHEETS | STA. TO STA.

F.A. RTE.	SECTION	COUNTY	TOTAL SHEETS	SHEET NO.
	17-12082-03-BR	KANE	88	3
		CONTRACT NO. 61K26		
		ILLINOIS FED. AID PROJECT		

SUMMARY OF QUANTITIES

ITEM NO.	ITEM	UNIT	TOTAL QUANTITY	CONSTRUCTION CODE 0004 ROADWAY	CONSTRUCTION CODE 0010 STRUCTURES	CONSTRUCTION CODE 0042 TRAINEES	NON PARTICIPATING 100% LOCAL
40603080	HOT-MIX ASPHALT BINDER COURSE, IL-19.0, N50	TON	526	526			
40604060	HOT-MIX ASPHALT SURFACE COURSE, IL-9.5, MIX "D", N50	TON	1024	339			685
42000070	PAVEMENT CONNECTOR (HMA) FOR BRIDGE APPROACH SLAB	SQ YD	85	85			
42300300	PORTLAND CEMENT CONCRETE DRIVEWAY PAVEMENT, 7 INCH	SQ YD	148	148			
44000100	PAVEMENT REMOVAL	SQ YD	2773	2773			
44000155	HOT-MIX ASPHALT SURFACE REMOVAL, 1 1/2"	SQ YD	5966				5966
44000157	HOT-MIX ASPHALT SURFACE REMOVAL, 2"	SQ YD	1581	1581			
44000200	DRIVEWAY PAVEMENT REMOVAL	SQ YD	445.2	95.8			349.4
48102100	AGGREGATE WEDGE SHOULDER, TYPE B	TON	257				257
48203021	HOT-MIX ASPHALT SHOULDERS, 6"	SQ YD	1208	1155			53
50100100	REMOVAL OF EXISTING STRUCTURES	EACH	1		1		
50102400	CONCRETE REMOVAL	CU YD	41.5		41.5		
50104650	SLOPE WALL REMOVAL	SQ YD	207		207		
50105220	PIPE CULVERT REMOVAL	FOOT	118		118		
50200100	STRUCTURE EXCAVATION	CU YD	20		20		
50300225	CONCRETE STRUCTURES	CU YD	185.8		185.8		
50300255	CONCRETE SUPERSTRUCTURE	CU YD	274.6		274.6		
50300260	BRIDGE DECK GROOVING	SQ YD	1088		1088		
50300280	CONCRETE ENCASEMENT	CU YD	33.4		33.4		
50300300	PROTECTIVE COAT	SQ YD	1326		1326		

*SPECIALTY ITEMS

SUMMARY OF QUANTITIES

ITEM NO.	ITEM	UNIT	TOTAL QUANTITY	CONSTRUCTION CODE 0004 ROADWAY	0010 STRUCTURES	0042 TRAINEES	NON PARTICIPATING 100% LOCAL 0005
50301350	CONCRETE SUPERSTRUCTURE (APPROACH SLAB)	CU YD	113.6		113.6		
50500105	FURNISHING AND ERECTING STRUCTURAL STEEL	L SUM	1		1		
50500505	STUD SHEAR CONNECTORS	EACH	8328		8328		
50800205	REINFORCEMENT BARS, EPOXY COATED	POUND	164180		164180		
51100100	SLOPE WALL 4 INCH	SQ YD	153		153		
51201900	FURNISHING STEEL PILES HP14X89	FOOT	995		995		
51202305	DRIVING PILES	FOOT	995		995		
51203900	TEST PILE STEEL HP14X89	EACH	4		4		
52100010	ELASTOMERIC BEARING ASSEMBLY, TYPE I	EACH	12		12		
52100510	ANCHOR BOLTS, 3/4"	EACH	24		24		
52100520	ANCHOR BOLTS, 1"	EACH	48		48		
54213669	PRECAST REINFORCED CONCRETE FLARED END SECTIONS 24"	EACH	2		2		
550A0120	STORM SEWERS, CLASS A, TYPE 1 24"	FOOT	104	104			
58600101	GRANULAR BACKFILL FOR STRUCTURES	CU YD	218		218		
59100100	GEOCOMPOSITE WALL DRAIN	SQ YD	109		109		
60108204	PIPE UNDERDRAINS, TYPE 2, 4"	FOOT	100	100			
60146304	PIPE UNDERDRAINS FOR STRUCTURES 4"	FOOT	203		203		
* 63000001	STEEL PLATE BEAM GUARDRAIL, TYPE A, 6 FOOT POSTS	FOOT	818.75	818.75			
* 63100085	TRAFFIC BARRIER TERMINAL, TYPE 6	EACH	4	4			
* 63100167	TRAFFIC BARRIER TERMINAL, TYPE 1 (SPECIAL) TANGENT	EACH	3	3			

*SPECIALTY ITEMS

SUMMARY OF QUANTITIES

	ITEM NO.	ITEM	UNIT	TOTAL QUANTITY	CONSTRUCTION CODE 0004 ROADWAY	0010 STRUCTURES	0042 TRAINEES	NON PARTICIPATING 100% LOCAL 0005
	63200310	GUARDRAIL REMOVAL	FOOT	1224	1224			
*	66900200	NON-SPECIAL WASTE DISPOSAL	CU YD	20	20			
*	66900530	SOIL DISPOSAL ANALYSIS	EACH	1	1			
*	66901001	REGULATED SUBSTANCES PRE-CONSTRUCTION PLAN	L SUM	1	1			
*	66901003	REGULATED SUBSTANCES FINAL CONSTRUCTION REPORT	L SUM	1	1			
*	66901006	REGULATED SUBSTANCES MONITORING	CAL DA	2	2			
	67100100	MOBILIZATION	L SUM	1	1			
	70107025	CHANGEABLE MESSAGE SIGN	CAL DA	125	125			
*	72000100	SIGN PANEL - TYPE 1	SQ FT	46.5	46.5			
*	72000200	SIGN PANEL - TYPE 2	SQ FT	14.25	14.25			
	72400100	REMOVE SIGN PANEL ASSEMBLY - TYPE A	EACH	6	6			
*	72501000	TERMINAL MARKER - DIRECT APPLIED	EACH	3	3			
*	72800100	TELESCOPING STEEL SIGN SUPPORT	FOOT	110	110			
*	78009000	MODIFIED URETHANE PAVEMENT MARKING - LETTERS AND SYMBOLS MODIFIED	SQ FT	135.9	86.1			49.8
*	78009004	URETHANE PAVEMENT MARKING - LINE 4"	FOOT	10605	7907			2698
*	78009006	MODIFIED URETHANE PAVEMENT MARKING - LINE 6"	FOOT	1094	1094			
*	78009012	MODIFIED URETHANE PAVEMENT MARKING - LINE 12"	FOOT	176	176			
*	78009024	MODIFIED URETHANE PAVEMENT MARKING - LINE 24"	FOOT	54	42			12
*	78200005	GUARDRAIL REFLECTORS, TYPE A	EACH	45	45			
	Z0012654	STRUCTURAL REPAIR OF CONCRETE (DEPTH EQUAL TO OR LESS THAN 5 INCHES)	SQ FT	40	40			

*SPECIALTY ITEMS

SUMMARY OF QUANTITIES

ITEM NO.	ITEM	UNIT	TOTAL QUANTITY	CONSTRUCTION CODE 0004 ROADWAY	0010 STRUCTURES	0042 TRAINEES	NON PARTICIPATING 100% LOCAL 0005
Z0013798	CONSTRUCTION LAYOUT	L SUM	1	1			
Z0048665	RAILROAD PROTECTIVE LIABILITY INSURANCE	L SUM	1	1			
Z0076600	TRAINEES	HOUR	1000			1000	
Z0076604	TRAINEES TRAINING PROGRAM GRADUATE	HOUR	1000			1000	
X4060280	HOT-MIX ASPHALT DRIVEWAY PAVEMENT, 3"	SQ YD	350				350
X4230710	PORTLAND CEMENT CONCRETE DRIVEWAY PAVEMENT, 6 INCH (SPECIAL)	SQ YD	43	43			
X5150110	NAME PLATES (SPECIAL)	EACH	1	1			
X7010216	TRAFFIC CONTROL AND PROTECTION, (SPECIAL)	L SUM	1	1			
XX006821	CONCRETE TRUCK WASHOUT	L SUM	1		1		

* SPECIALTY ITEM

MODEL: General Notes 1
FILE NAME: P:\2022\2232516\Cadd\02 Design\CADD_Sheets\2232516-sht-SOQ-05.dgn

HAMPTON, LENZINI AND RENWICK, INC.
3707 N RANDALL ROAD SUITE 100
ELGIN, ILLINOIS 60123
ILLINOIS PROFESSIONAL DESIGN FIRM
LS / PE / SE CORP. 184.000959

USER NAME = ajungermann	DESIGNED -	REVISED -	
	DRAWN -	REVISED -	
PLOT SCALE = 0.16666667 ' / in.	CHECKED -	REVISED -	
PLOT DATE = 3/19/2025	DATE -	REVISED -	

PLATO TOWNSHIP
ROAD DISTRICT

MUIRHEAD ROAD OVER CHICAGO CENTRAL AND PACIFIC RAILROAD
SUMMARY OF QUANTITIES

SCALE: | SHEET OF SHEETS | STA. TO STA.

F.A. RTE.	SECTION	COUNTY	TOTAL SHEETS	SHEET NO.
	17-12082-01-BR	KANE	88	7

CONTRACT NO. 61K26

ILLINOIS | FED. AID PROJECT

EXISTING LEGEND

- A — EXISTING ASPHALT PAVEMENT
- B — EXISTING AGGREGATE BASE
- C — EXISTING ASPHALT SHOULDER
- D — EXISTING AGGREGATE SHOULDER
- E — EXISTING GUARDRAIL (TO BE REMOVED)

REMOVAL ITEMS

PROPOSED LEGEND

1. PROPOSED HMA SURFACE COURSE, IL-9.5, MIX "D", N50, 2"
2. PROPOSED HMA BINDER COURSE, IL-19.0, N50, 6.5"
3. PROPOSED AGGREGATE SUBGRADE IMPROVEMENT, 12"
4. PROPOSED HMA SHOULDER, 6"
5. PROPOSED AGGREGATE WEDGE SHOULDER, TYPE B
6. PROPOSED STEEL PLATE BEAM GUARDRAIL, TYPE A
7. PROPOSED SEEDING, CLASS 2A
   TOPSOIL, FURNISH AND PLACE, 4"
8. PROPOSED RESURFACING CONSISTING OF:
   HOT-MIX ASPHALT SURFACE REMOVAL, 1.5"
   HMA SURFACE COURSE, IL-9.5, MIX "D", N50, 2"
9. PROPOSED FURNISHED EXCAVATION

HOT-MIX ASPHALT MIXTURE REQUIREMENTS		QMP
MIXTURE TYPE	AIR VOIDS @ N_{ini}	
PAVEMENT RECONSTRUCTION		
HOT-MIX ASPHALT SURFACE COURSE, IL-9.5, MIX "D", N50: 2"	4% @ 50 Gyr.	LR 1030-2
HOT-MIX ASPHALT BINDER COURSE, IL-19.0, N50: 6.5"	4% @ 50 Gyr.	LR 1030-2
HMA SHOULDER 6"		
HOT-MIX ASPHALT SURFACE COURSE, IL-9.5, MIX "D", N50: 2"	4% @ 50 Gyr.	LR 1030-2
HOT-MIX ASPHALT BINDER COURSE, IL-19.0, N50; 4"	4% @ 50 Gyr.	LR 1030-2
PAVEMENT RESURFACING		
HOT-MIX ASPHALT SURFACE COURSE, IL-9.5, MIX "D", N50: 2"	4% @ 50 Gyr.	LR 1030-2
BRIDGE APPROACH CONNECTOR PAVEMENT		
HOT-MIX ASPHALT SURFACE COURSE, IL-9.5, MIX "D", N50: 2"	4% @ 50 Gyr.	LR 1030-2
HOT-MIX ASPHALT BINDER COURSE, IL-19.0, N50 (VAR DEPTH)	4% @ 50 Gyr.	LR 1030-2
HMA DRIVEWAY PAVEMENT 3"		
HOT-MIX ASPHALT SURFACE COURSE, IL-9.5, MIX "D", N50; 3" (IN 2 LIFTS)	4% @ 50 Gyr.	LR 1030-2
QMP Designations: Quality Control/Quality Assurance (QC/QA): PER LR1030-2		

NOTE 1==> THE UNIT WEIGHT USED TO CALCULATE ALL HMA SURFACE MIXTURE QUANTITIES IS 112 LBS/SQ YD/IN.

THE "AC TYPE" SHALL BE "PG 58-28" UNLESS MODIFIED BY RECLAIMED MATERIALS SPECIFICATION.

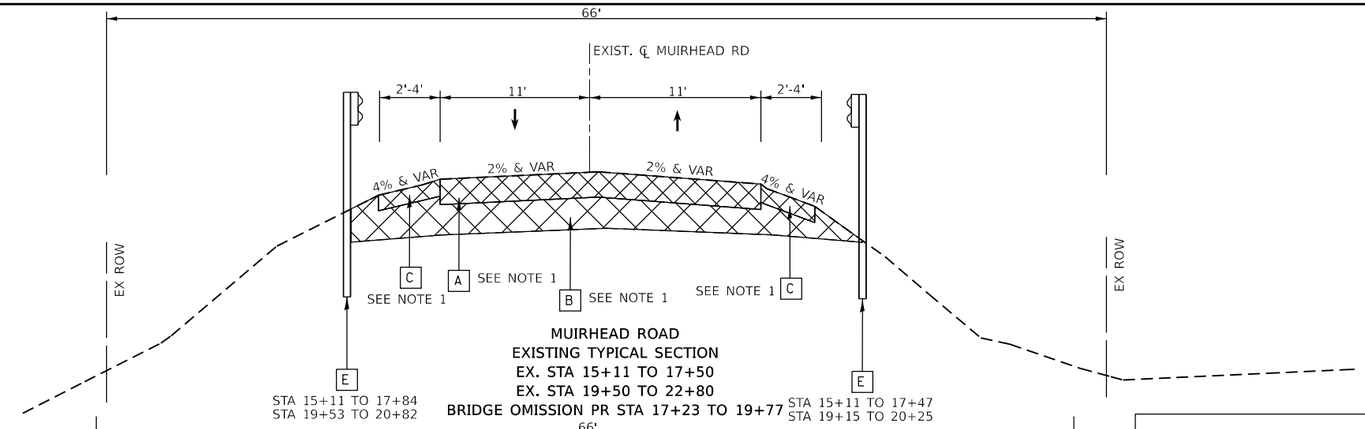

MUIRHEAD ROAD
EXISTING TYPICAL SECTION
EX. STA 15+11 TO 17+50
EX. STA 19+50 TO 22+80
BRIDGE OMISSION PR STA 17+23 TO 19+77

NOTES:

1. PAVEMENT AND SHOULDER REMOVAL FROM STA 15+11 TO 23+30. PAVEMENT RESURFACING FROM STA 23+30 TO 44+85.

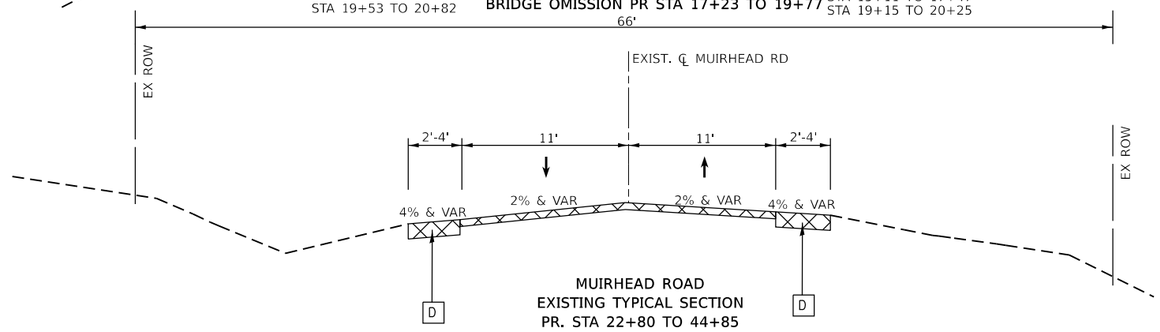

MUIRHEAD ROAD
EXISTING TYPICAL SECTION
PR. STA 22+80 TO 44+85

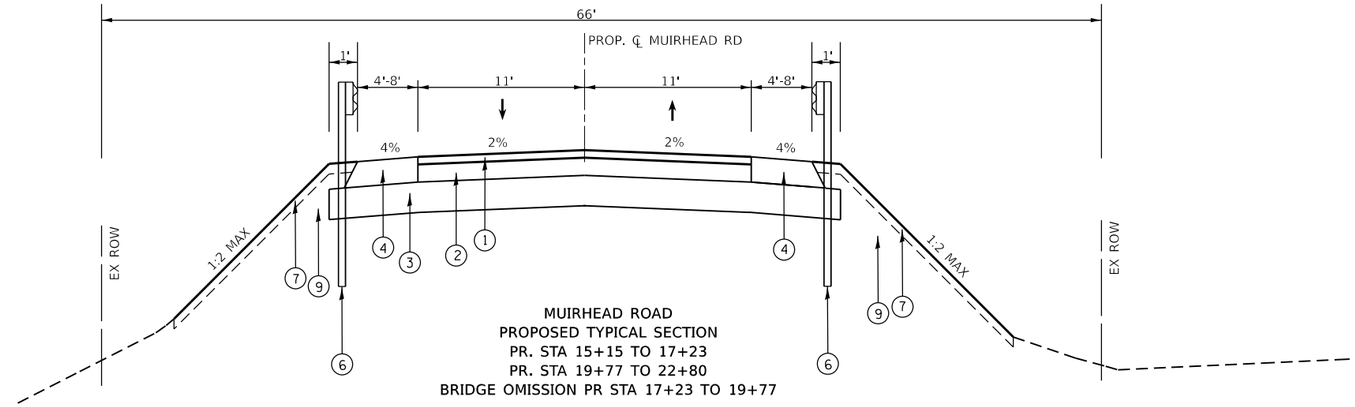

MUIRHEAD ROAD
PROPOSED TYPICAL SECTION
PR. STA 15+15 TO 17+23
PR. STA 19+77 TO 22+80
BRIDGE OMISSION PR STA 17+23 TO 19+77

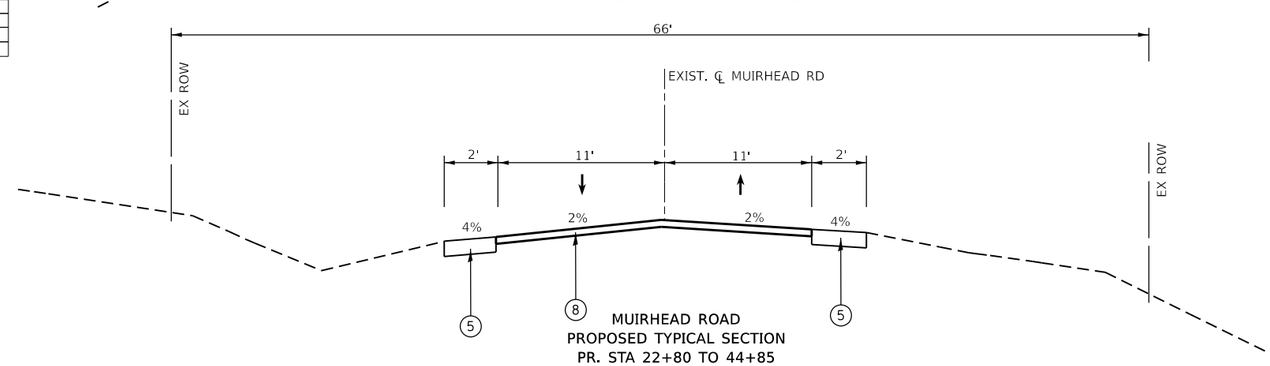

MUIRHEAD ROAD
PROPOSED TYPICAL SECTION
PR. STA 22+80 TO 44+85

MODEL: Muirhead Typ Sections
FILE NAME: P:\2022\220616\Cadd02 Design\CADD Sheets\220616-iht-typical.dgn

HAMPTON, LENZINI AND RENWICK, INC. 1707 N RANDALL ROAD, SUITE 100 ELGIN, ILLINOIS 60123 ILLINOIS PROFESSIONAL DESIGN FIRM LS / PE / SE CORP. 184.000959	USER NAME = ajungermann	DESIGNED -	REVISED -
		DRAWN -	REVISED -
	PLOT SCALE = 0.16666667 ' / in.	CHECKED -	REVISED -
	PLOT DATE = 3/18/2025	DATE -	REVISED -

PLATO TOWNSHIP ROAD DISTRICT

MUIRHEAD ROAD OVER CHICAGO CENTRAL AND PACIFIC RAILROAD
MUIRHEAD ROAD TYPICAL SECTIONS

SCALE: | SHEET OF SHEETS | STA. TO STA.

F.A. RTE.	SECTION	COUNTY	TOTAL SHEETS	SHEET NO.
	17-12082-01-BR	KANE	88	8
		CONTRACT NO. 61K26		
	ILLINOIS	FED. AID PROJECT		

EXISTING LEGEND

- A EXISTING ASPHALT PAVEMENT
- B EXISTING ASPHALT SHOULDER
- C EXISTING AGGREGATE SHOULDER
- D EXISTING GUARDRAIL (TO BE REMOVED)
- E HOT-MIX ASPHALT SURFACE REMOVAL, 2.0"

REMOVAL ITEMS

PROPOSED LEGEND

1. PROPOSED HMA SURFACE COURSE, IL-9.5, MIX "D", N50, 2"
2. PROPOSED HMA BINDER COURSE, IL-19.0, N50, 6.5"
3. PROPOSED AGGREGATE SUBGRADE IMPROVEMENT, 12"
4. PROPOSED HMA SHOULDER, 6"
5. PROPOSED AGGREGATE WEDGE SHOULDER, TYPE B
6. PROPOSED STEEL PLATE BEAM GUARDRAIL, TYPE A
7. PROPOSED SEEDING, CLASS 2A
   TOPSOIL, FURNISH AND PLACE, 4"
8. PROPOSED RESURFACING CONSISTING OF:
   HOT-MIX ASPHALT SURFACE REMOVAL, 1.5"
   HMA SURFACE COURSE, IL-9.5, MIX "D", N50, 2"
9. PROPOSED FURNISHED EXCAVATION
10. PROPOSED RESURFACING CONSISTING OF:
    HOT-MIX ASPHALT SURFACE REMOVAL, 2.0"
    HMA SURFACE COURSE, IL-9.5, MIX "D", N50, 2"

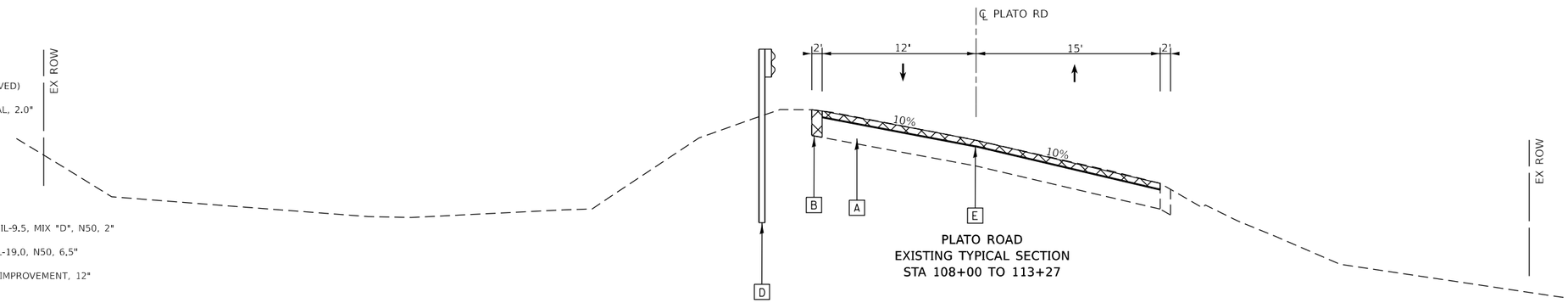

PLATO ROAD
EXISTING TYPICAL SECTION
STA 108+00 TO 113+27

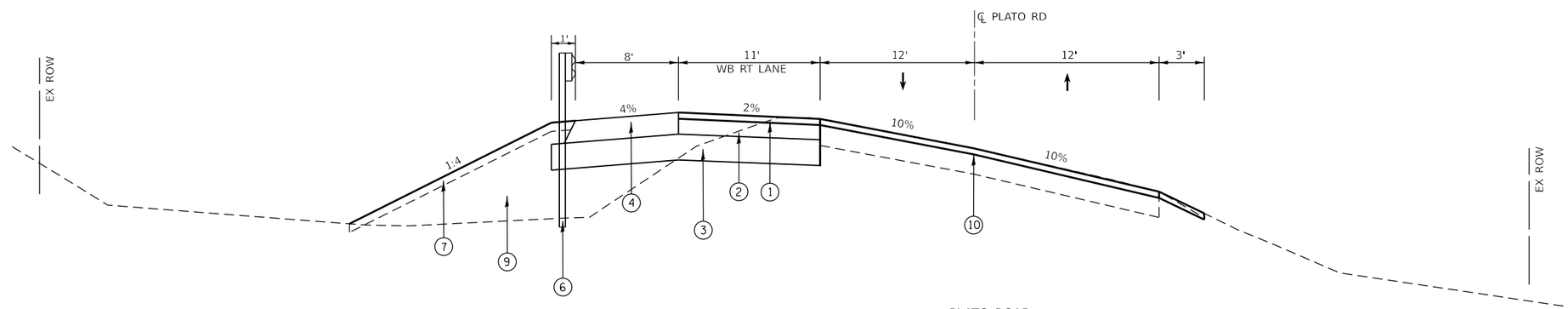

PLATO ROAD
PROPOSED TYPICAL SECTION
STA 108+00 TO 113+27

MODEL: Plato Typ Sections
FILE NAME: P:\2022\220616\Cad\02 Design\CADD_Sheets\220616-sht-typical.dgn

HAMPTON, LENZINI AND RENWICK, INC. 1707 N RANDALL ROAD, SUITE 100 ELGIN, ILLINOIS 60123 ILLINOIS PROFESSIONAL DESIGN FIRM LS / PE / SE CORP. 184.000959	USER NAME = ajungermann	DESIGNED -	REVISED -	PLATO TOWNSHIP ROAD DISTRICT	MUIRHEAD ROAD OVER CHICAGO CENTRAL AND PACIFIC RAILROAD PLATO ROAD TYPICAL SECTIONS
		DRAWN -	REVISED -		
	PLOT SCALE = 0.16666667 ' / in.	CHECKED -	REVISED -		
	PLOT DATE = 3/18/2025	DATE -	REVISED -		SCALE: SHEET OF SHEETS STA. TO STA.

F.A. RTE.	SECTION	COUNTY	TOTAL SHEETS	SHEET NO.
	17-12082-01-BR	KANE	88	9
		CONTRACT NO. 61K26		
	ILLINOIS	FED. AID PROJECT		

REMOVAL SCHEDULE

STATION REFERENCE	STATION REFERENCE		40201000 AGGREGATE FOR TEMPORARY ACCESS (TON)	44000100 PAVEMENT REMOVAL (SQ YD)	44000155 HMA, SURFACE REMOVAL, 1.5" (SQ YD)	44000157 HMA, SURFACE REMOVAL, 2" (SQ YD)	44000200 DRIVEWAY PAVEMENT REMOVAL (SQ YD)	63200310 GUARDRAIL REMOVAL (FOOT)	72400100 REMOVE SIGN PANEL ASSEMBLY - TYPE A (EACH)
15+45	17+50			1895					
19+50	22+80			878					
22+80	39+40	1660			2029				
22+80	42+06	1926			2354				
39+40	41+38	198			286				
41+38	41+57	19			36				
41+57	44+85	328			765				
42+06	42+18	12			21				
42+18	44+85	267			475				
108+00	113+27	527				1581			
DRIVEWAYS									
20+42	RIGHT		15.4						
21+79	LEFT		14.1				42.3		
25+98	LEFT						36.2		
28+03	LEFT						47.4		
30+16	RIGHT						30.4		
30+59	LEFT						38.9		
32+36	RIGHT						34.9		
33+64	LEFT						40.6		
39+40	RIGHT						30.0		
39+42	LEFT						44.4		
40+18	RIGHT						35.4		
41+94	RIGHT						11.2		
111+06	LEFT						53.5		
108+00	17+66.5	LEFT						284	
15+30	16+37	MIDDLE						435	
15+56	17+46.5	RIGHT						265	
19+53	20+81.5	LEFT						130	
19+49.5	19+49.5	RIGHT						110	
16+04.5		R1-1							1
16+33.7		R1-1							1
22+16.2		W3-1							1
109+39.4		W1-8							1
111+10.2		W1-8							1
112+48.9		W1-8							1
TOTALS			29.5	2773	5966	1581	445.2	1224	6

SIGNING SCHEDULE

STA/REF	SIGN CODE	DESCRIPTION	72000100 SIGN PANEL - TYPE 1 (SQ FT)	72000200 SIGN PANEL - TYPE 2 (SQ FT)	72800100 TELESCOPING STEEL SIGN SUPPORT (FOOT)
15+52.1	R1-1	STOP SIGN	9		10
	D3-1	"PLATO ROAD"		1.5	
16+26.9	W1-6R	ONE DIRECTION ARROW (RIGHT)	8		10
17+03.3	W1-6R	ONE DIRECTION ARROW (RIGHT)	6		10
	W13-1aP	ADVISORY CONFIRMATION 25 MPH	5		
20+89.5	W1-1	HORIZONTAL ALIGNMENT	6.25		10
	W13-1P	ADVISORY 25 MPH		2.25	
22+16.6	W3-1	STOP AHEAD ADVISORY	6.25		10
	W16-8P	"PLATO ROAD"		1.5	
108+04.6	W1-8	CHEVRON		1.5	10
108+52.2	W1-8	CHEVRON		1.5	10
108+99.4	W1-8	CHEVRON		1.5	10
109+86.3	W1-7	DOUBLE ARROW	6		
110+41.4	W1-8	CHEVRON		1.5	10
110+88.7	W1-8	CHEVRON		1.5	10
111+36.1	W1-8	CHEVRON		1.5	10
TOTALS			46.5	14.25	110

DRAINAGE AND UTILITY SCHEDULE

STATION REFERENCE	STATION REFERENCE	LENGTH (FOOT)	20800150 TRENCH BACKFILL (CU YD)	28100105 STONE RIPRAP, CLASS A3 (SQ YD)	50105220 PIPE CULVERT REMOVAL (FOOT)	54213669 PRECAST REINFORCED CONCRETE FLARED END SECTIONS 24" (EACH)	550A0120 STORM SEWERS, CLASS A, TYPE 1 24" (FOOT)
15+72.5			4.1			1	104
17+03	17+21			9.2			
17+20	17+55			25.7			
19+43	19+60			13.7			
19+77	19+95			11.2			
109+62					60		
110+48.5				3.0		1	
110+49.5	110+72.2				58		
TOTALS			4.1	62.8	118	2	104

GUARDRAIL SCHEDULE

STATION REFERENCE	STATION REFERENCE	QUADRANT	63000001 STEEL PLATE BEAM GUARDRAIL, TYPE A, 6 FOOT POSTS (FOOT)	63100085 TRAFFIC BARRIER TERMINAL, TYPE 6 (EACH)	63100167 TRAFFIC BARRIER TERMINAL, TYPE 1 (SPECIAL) TANGENT (EACH)	72501000 TERMINAL MARKER - DIRECT APPLIED (EACH)	78200005 GUARDRAIL REFLECTORS, TYPE A (EACH)
108+00	17+56	SW	337.50	1			24
17+22	110+87.5	SE	281.25	1	1	1	16.5
19+58	20+33.5	NE	93.75	1	1	1	1.5
19+93	20+83	NW	106.25	1	1	1	2.5
TOTALS			818.75	4	3	3	45

PAVEMENT MARKING SCHEDULE

STA/REF BEGIN	STA/REF END	LENGTH (FOOT)	LINE TYPE / COLOR W = WHITE Y = YELLOW	DESCRIPTION	78009000 MODIFIED URETHANE PAVEMENT MARKING - LETTERS AND SYMBOLS (SQ FT)	78009004 MODIFIED URETHANE PAVEMENT MARKING - LINE 4" (FOOT)	78009006 MODIFIED URETHANE PAVEMENT MARKING - LINE 6" (FOOT)	78009012 MODIFIED URETHANE PAVEMENT MARKING - LINE 12" (FOOT)	78009024 MODIFIED URETHANE PAVEMENT MARKING - LINE 24" (FOOT)
15+45			W	STOP BAR					42
15+46	44+85	2939	W	RIGHT EDGE LINE		2939		64	
15+46	44+85	2939	W	LEFT EDGE LINE		2939		64	
15+46	18+55	309	Y	CENTERLINE		618			
18+55	22+82	427	Y	SOLID (L), DASH (R)		533.75			
22+48.5			W	AHEAD	29				
22+64			W	STOP	20.8				
23+88	26+18	230	Y	SOLID (L), DASH (R)		287.5			
26+18	29+33	315	Y	DASH CENTERLINE		78.75			
29+33	39+63	1030	Y	DASH (L), SOLID (R)		1287.5			
39+09			W	STOP	20.8				
39+24.5			W	AHEAD	29				
39+63	44+85	522	Y	CENTERLINE		1044			
44+83			W	STOP BAR					12
108+00	109+41	141	Y	CENTERLINE		282			
108+00	109+41	141	W	SOLID EDGELINE (L)			141	8	
108+00	113+27	527	W	SOLID EDGELINE (R)			527		
109+41	110+42	101	Y	DASH CENTERLINE		25.25			
110+42	113+27	285	Y	CENTERLINE		570			
110+42	113+27	285	W	SOLID EDGELINE (L)			285	40	
110+42	111+53	111	W	SOLID TURN LANE			111		
111+14			W	RIGHT ARROW	15.5				
111+39			W	ONLY	20.8				
111+53	112+72	119	W	DASH TURN LANE			29.75		
TOTALS					135.9	10605	1094	176	54

MODEL: Schedule 1
FILE NAME: P:\2022\220616\Cad\02 Design\CADD_Sheets\220616-sht-schedules.dgn

HAMPTON, LENZINI AND RENWICK, INC.
1707 N RANDALL ROAD, SUITE 100
ELGIN, ILLINOIS 60123
ILLINOIS PROFESSIONAL DESIGN FIRM
LS / PE / SE CORP. 184.000959

USER NAME = ajungermann	DESIGNED -	REVISED -
	DRAWN -	REVISED -
PLOT SCALE = 0.16666667 ' / in.	CHECKED -	REVISED -
PLOT DATE = 3/18/2025	DATE -	REVISED -

PLATO TOWNSHIP ROAD DISTRICT

MUIRHEAD ROAD OVER CHICAGO CENTRAL AND PACIFIC RAILROAD
SCHEDULE OF QUANTITIES

SCALE: | SHEET OF SHEETS | STA. TO STA.

F.A. RTE.	SECTION	COUNTY	TOTAL SHEETS	SHEET NO.
	17-12082-01-BR	KANE	88	10

CONTRACT NO. 61K26

ILLINOIS | FED. AID PROJECT

PAVEMENT SCHEDULE

STATION BEGIN	STATION END	30300112 AGGREGATE SUBGRADE IMPROVEMENT, 12" (SQ YD)	40200900 AGGREGATE SURFACE COURSE, TYPE B (CU YD)	40600275 BITUMINOUS MATERIALS (PRIME COAT) (POUND)	40600290 BITUMINOUS MATERIALS (TACK COAT) (POUND)	40600370 LONGITUDINAL JOINT SEALANT (FOOT)	40603080 HMA BINDER COURSE, IL-19.0 N50 (TON)	40604060 HMA SURFACE COURSE, IL-9.5, MIX "D", N50 (TON)	42000070 PAVEMENT CONNECTOR (HMA) FOR BRIDGE APPROACH SLAB (SQ YD)	42300300 PORTLAND CEMENT CONCRETE DRIVEWAY PAVEMENT, 7" (SQ YD)	48102100 AGGREGATE WEDGE SHOULDER, TYPE B (TON)	482203021 HMA SHOULDERS, 6" (SQ YD)	Z0004510 HMA DRIVEWAY PAVEMENT, 3" (SQ YD)	XZ999999 DECORATIVE CONCRETE DRIVEWAY (SQ FT)
MUIRHEAD ROAD														
15+23	17+23	934		220.0	110.0	200.0	178.0	54.8	42.3			315		
19+77	20+35	136										52		
19+77	20+90	264		124.3	62.2	113.0	100.5	30.9	42.3			100		
20+35	20+42	15										5		
20+42	22+80	450										128		
20+90	20+97	15		7.7	3.9	7.0	6.2	1.9				5		
20+97	22+80	346		201.3	100.7	183.0	162.8	50.1				81		
22+80	24+00	227										53		
22+80	44+85				2751.5	2205.0		684.8						
SHOULDERS-LEFT														
22+80	42+06										143			
SHOULDERS-RIGHT														
24+00	39+40										114			
PLATO ROAD														
108+00	113+27	586			711.5	527.0		177.1				468		
110+42	111+53	136		61.1	30.6		49.4	15.2						
111+53	112+82	79		35.5	17.8		28.7	8.8						
DRIVEWAYS														
20+42	RIGHT		7.7											
21+79	LEFT													381.0
25+98	LEFT												36.2	
28+03	LEFT												47.4	
30+16	RIGHT												30.4	
30+59	LEFT												38.9	
32+36	RIGHT												34.9	
33+64	LEFT												40.6	
39+40	RIGHT												30.0	
39+42	LEFT												44.4	
40+18	RIGHT												35.4	
41+94	RIGHT												11.2	
111+06	LEFT	190								147.7				
TOTALS		3379	7.7	649.9	3788.2	3235	526	1024	85	148	257	1208	350	381

MODEL: Schedule 2
FILE NAME: P:\2022\220616\Cad\02 Design\CADD Sheets\220616-sht-schedule.dgn

HAMPTON, LENZINI AND RENWICK, INC.
1707 N RANDALL ROAD, SUITE 100
ELGIN, ILLINOIS 60123
ILLINOIS PROFESSIONAL DESIGN FIRM
L & I / PE / SE CORP. 184.000959

USER NAME = ajungermann	DESIGNED -	REVISED -	
	DRAWN -	REVISED -	
PLOT SCALE = 0.16666667 ' / in.	CHECKED -	REVISED -	
PLOT DATE = 3/18/2025	DATE -	REVISED -	

PLATO TOWNSHIP
ROAD DISTRICT

MUIRHEAD ROAD OVER CHICAGO CENTRAL AND PACIFIC RAILROAD
SCHEDULE OF QUANTITIES

SCALE: SHEET OF SHEETS STA. TO STA.

F.A. RTE.	SECTION	COUNTY	TOTAL SHEETS	SHEET NO.
	17-12082-01-BR	KANE	88	11
		CONTRACT NO. 61K26		
	ILLINOIS	FED. AID PROJECT		

EARTHWORK					
	AVERAGE END AREA		VOLUME		
	EARTH EXCAVATION	EMBANKMENT	EARTH EXCAVATION (A)	EMBANKMENT (B)	DIFFERENCE (I) I=0.85(A)-B
STATION	(SQ FT)	(SQ FT)	(CU YD)	(CU YD)	(CU YD)
MUIRHEAD ROAD					
15+25.00	30.7	1.2			
			0.0	0.0	0.0
15+50.00	0.3	430.7			
			14.3	199.9	-187.8
15+75.00	0.2	410.4			
			0.2	389.4	-389.2
16+00.00	0.2	290.6			
			0.2	324.5	-324.4
16+25.00	1.6	111.2			
			0.8	186.0	-185.3
16+50.00	0.9	14.8			
			1.1	58.3	-57.4
16+75.00	0.4	29.6			
			0.6	20.6	-20.1
17+00.00	0.3	50.2			
			0.3	36.9	-36.6
17+25.00	0.3	78.0			
			0.3	59.3	-59.1
17+50.00	0.4	102.0			
			0.3	83.3	-83.0
17+75.00	0.5	112.1			
			0.4	99.1	-98.8
18+00.00	0.5	126.6			
			0.5	110.5	-110.1
18+25.00	0.6	131.6			
			0.5	119.5	-119.1
18+50.00	0.9	139.5			
			0.7	125.5	-124.9
18+75.00	0.4	248.9			
			0.6	179.8	-179.3
19+00.00	0.3	213.0			
			0.3	213.8	-213.6
19+25.00	0.4	155.4			
			0.3	170.6	-170.3
19+50.00	0.4	130.5			
			0.4	132.3	-132.0
19+75.00	0.3	134.9			
			0.4	122.9	-122.6
20+00.00	0.3	128.5			
			0.3	122.0	-121.7
20+25.00	0.3	109.1			
			0.3	110.0	-109.8
20+50.00	0.3	87.6			
			0.3	91.1	-90.8
20+75.00	0.3	77.2			
			0.3	76.3	-76.0
21+00.00	0.4	53.1			
			0.3	60.3	-60.0
21+25.00	0.4	33.0			
			0.4	39.8	-39.5
21+50.00	0.4	18.1			
			0.3	23.6	-23.4
21+75.00	0.8	3.7			
			0.5	10.1	-9.6

EARTHWORK					
	AVERAGE END AREA		VOLUME		
	EARTH EXCAVATION	EMBANKMENT	EARTH EXCAVATION (A)	EMBANKMENT (B)	DIFFERENCE (I) I=0.85(A)-B
STATION	(SQ FT)	(SQ FT)	(CU YD)	(CU YD)	(CU YD)
MUIRHEAD ROAD					
22+00.00	7.9	0.3			
			4.0	1.8	1.6
22+25.00	16.6	0.0			
			11.4	0.1	9.5
22+50.00	22.7	0.0			
			18.2	0.0	15.5
22+75.00	27.1	0.0			
			23.1	0.0	19.6
23+00.00	31.0	0.0			
			26.9	0.0	22.9
23+25.00	28.8	0.0			
			27.7	0.0	23.5
23+50.00	0.0	0.0			
			13.3	0.0	11.3
23+75.00	0.0	0.0			
			0.0	0.0	0.0
24+00.00	0.0	0.0			
			0.0	0.0	0.0
24+25.00	0.0	0.0			
			0.0	0.0	0.0
24+50.00	0.0	0.0			
			0.0	0.0	0.0
24+75.00	0.0	0.0			
			0.0	0.0	0.0
25+00.00	0.0	0.0			
			0.0	0.0	0.0
25+25.00	0.0	0.0			
			0.0	0.0	0.0
25+50.00	0.0	0.0			
			0.0	0.0	0.0
25+75.00	0.0	0.0			
			0.0	0.0	0.0
26+00.00	0.0	0.0			
			0.0	0.0	0.0
26+25.00	0.0	0.0			
			0.0	0.0	0.0
26+50.00	0.0	0.0			
			0.0	0.0	0.0
26+75.00	0.0	0.0			
			0.0	0.0	0.0
26+99.75	0.0	0.0			
Grand Total:			149.7	3167.5	-3040.3

EARTHWORK					
	AVERAGE END AREA		VOLUME		
	EARTH EXCAVATION	EMBANKMENT	EARTH EXCAVATION (A)	EMBANKMENT (B)	DIFFERENCE (I) I=0.85(A)-B
STATION	(SQ FT)	(SQ FT)	(CU YD)	(CU YD)	(CU YD)
PLATO ROAD					
110+00.00	6.8	178.8			
			0.0	0.0	0.0
110+50.00	5.0	31.2			
			10.9	194.4	-185.1
111+00.00	8.3	1.6			
			12.4	30.4	-19.9
111+50.00	24.5	0.0			
			30.4	1.4	24.4
112+00.00	21.2	0.0			
			42.4	0.0	36.0
112+50.00	16.0	0.0			
			34.5	0.0	29.3
113+00.00	12.2	5.9			
			26.2	5.5	16.7
Grand Total:			156.7	231.7	-98.5

EARTHWORK SUMMARY					
LOCATION	EARTH EXCAVATION (CU YD)	EXCAVATION FOR STRUCTURE * (CU YD)	EXCAVATION AVAILABLE FOR EMBANKMENT ADJUSTED FOR SHRINKAGE 15% (CU YD)	EMBANKMENT (CU YD)	EARTHWORK BALANCE WASTE (+) OR SHORTAGE (-) (CU YD)
MUIRHEAD ROAD					
STA. 15+25 TO 27+00	150		128	3168	-3041
		20	17		17
PLATO ROAD					
STA. 110+00 TO 113+00	157		133	232	-99
PROJECT TOTAL	307	20	278	3400	-3122

*FOR INFORMATION ONLY

MODEL: General Notes 1
FILE NAME: P:\2023\220616\Cad\02 Design\CADD Sheets\220616-sht-SOQ-06.dgn

HAMPTON, LENZINI AND RENWICK, INC.
1707 N RANDALL ROAD, SUITE 100
ELGIN, ILLINOIS 60123
ILLINOIS PROFESSIONAL DESIGN FIRM
LS / PE / SE CORP. 184.000958

USER NAME = ajungermann	DESIGNED -	REVISED -	
	DRAWN -	REVISED -	
PLOT SCALE = 0.16666667 ' / in.	CHECKED -	REVISED -	
PLOT DATE = 3/18/2025	DATE -	REVISED -	

PLATO TOWNSHIP
ROAD DISTRICT

MUIRHEAD ROAD OVER CHICAGO CENTRAL AND PACIFIC RAILROAD
SUMMARY OF QUANTITIES

SCALE: SHEET OF SHEETS STA. TO STA.

F.A. RTE.	SECTION	COUNTY	TOTAL SHEETS	SHEET NO.
	17-12082-01-BR	KANE	88	12
		CONTRACT NO. 61K26		
	ILLINOIS	FED. AID PROJECT		

PLATO ROAD			
TYPE	STATION	NORTHING	EASTING
POT	100+00.00	1949927.067	959630.221
PC	102+90.46	1949934.359	959920.589
PI	109+72.55	1949951.483	960602.466
PT	113+56.05	1949269.427	960609.425

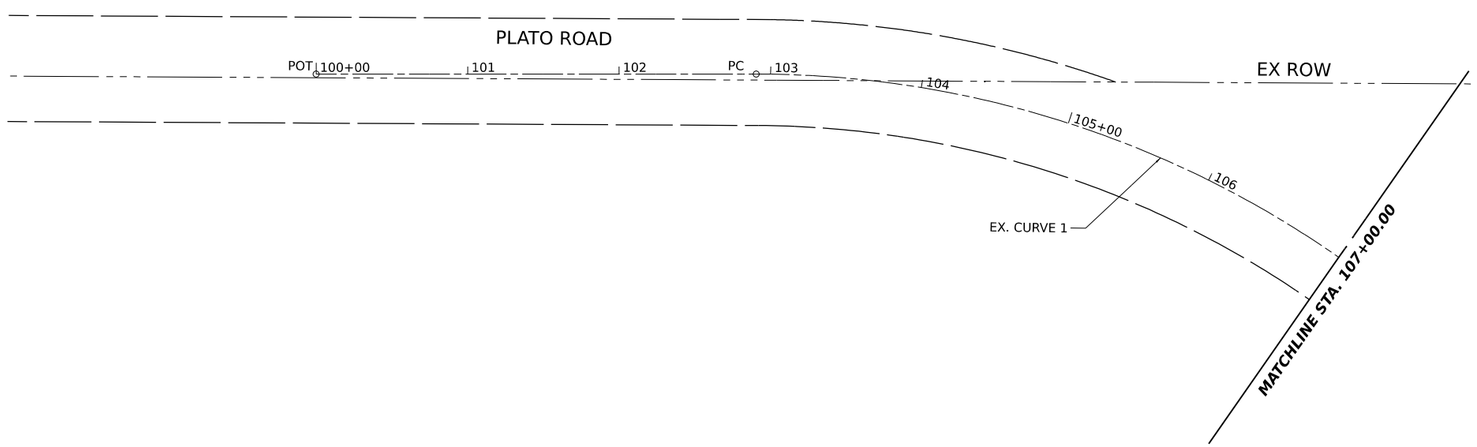

MUIRHEAD ROAD			
TYPE	STATION	NORTHING	EASTING
POT	15+11.58	1949621.355	960505.666
PC	15+46.41	1949643.362	960532.658
PI	16+39.76	1949702.352	960605.008
PT	17+20.42	1949795.698	960604.056
PI	20+86.77	1950162.028	960600.318
PI	26+99.75	1950774.979	960594.03
PI	41+93.92	1952269.032	960575.258
PI	46+76.35	1952751.429	960570.128
POT	49+52.54	1953027.621	960568.203

EX CURVE 1
PI STA = 109+72.55
Δ = 90°51'14" (RT)
D = 08°31'34"
R = 672.00'
T = 682.09'
E = 285.51'
PC STA = 102+90.46
PT STA = 113+56.05

EX CURVE 2
PI STA = 80+87.04
Δ = 17°37'39" (LT)
D = 23°31'23"
R = 243.57'
T = 37.77'
E = 2.91'
PC STA = 80+49.27
PT STA = 81+24.21

BENCHMARKS

BM 1 — CROSS NOTCH IN □ ON NORTHEAST WINGWALL
STA. 19+30.52, 21.45' RT
ELEV. 925.77

BM3 — RAILROAD SPIKE IN POWER POLE NORTHWEST CORNER PLATO & MUIRHEAD
STA. 16+91.71, 42.39' LT
ELEV. 922.12

CONTROL POINTS

SEE SHEET 16 FOR CONTROL POINT DESCRIPTIONS

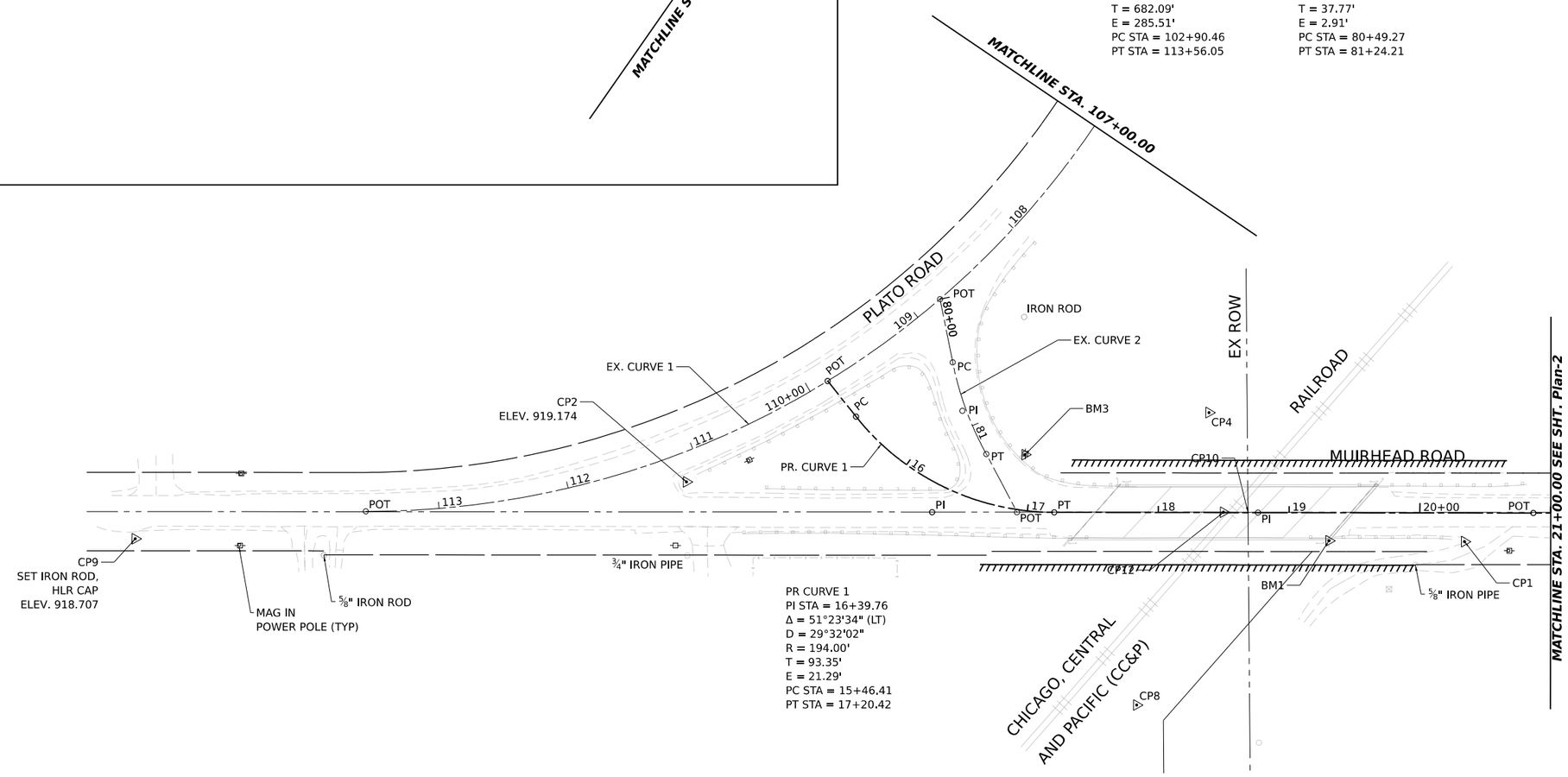

PR CURVE 1
PI STA = 16+39.76
Δ = 51°23'34" (LT)
D = 29°32'02"
R = 194.00'
T = 93.35'
E = 21.29'
PC STA = 15+46.41
PT STA = 17+20.42

MODEL: P_MUIRHEAD - Plan-1 [Sheet]
FILE NAME: P:\2022\220616\Cad\02 Design\CADD_Sheets\220616-lrh-ATB.dgn

HAMPTON, LENZINI AND RENWICK, INC.
1707 N RANDALL ROAD, SUITE 100
ELGIN, ILLINOIS 60123
ILLINOIS PROFESSIONAL DESIGN FIRM
LS / PE / SE CORP. 184.000959

USER NAME = ajungermann	DESIGNED - ____	REVISED - ____	
	DRAWN - ____	REVISED - ____	
PLOT SCALE = 0.16666667 ' / in.	CHECKED - ____	REVISED - ____	
PLOT DATE = 3/18/2025	DATE - ____	REVISED - ____	

PLATO TOWNSHIP
ROAD DISTRICT

MUIRHEAD ROAD OVER CHICAGO CENTRAL AND PACIFIC RAILROAD
ALIGNMENT, TIES & BENCHMARKS

SCALE: 1"=50' | SHEET 1 OF 4 SHEETS | STA. TO STA.

F.A. RTE.	SECTION	COUNTY	TOTAL SHEETS	SHEET NO.
	17-12082-01-BR	KANE	88	13
		CONTRACT NO. 61K26		
	ILLINOIS	FED. AID PROJECT		

BENCHMARKS

BM 2 RRS SOUTHEAST CORNER
CHIPPEWA & MUIRHEAD

STA. 22+74.97, 26.51' RT
ELEV. 922.87

CONTROL POINTS

SEE SHEET 16 FOR CONTROL POINT DESCRIPTIONS

MUIRHEAD ROAD			
TYPE	STATION	NORTHING	EASTING
POT	15+11.58	1949621.355	960505.666
PC	15+46.41	1949643.362	960532.658
PI	16+39.76	1949702.352	960605.008
PT	17+20.42	1949795.698	960604.056
PI	20+86.77	1950162.028	960600.318
PI	26+99.75	1950774.979	960594.03
PI	41+93.92	1952269.032	960575.258
PI	46+76.35	1952751.429	960570.128
POT	49+52.54	1953027.621	960568.203

0 50 100 150
SCALE IN FEET

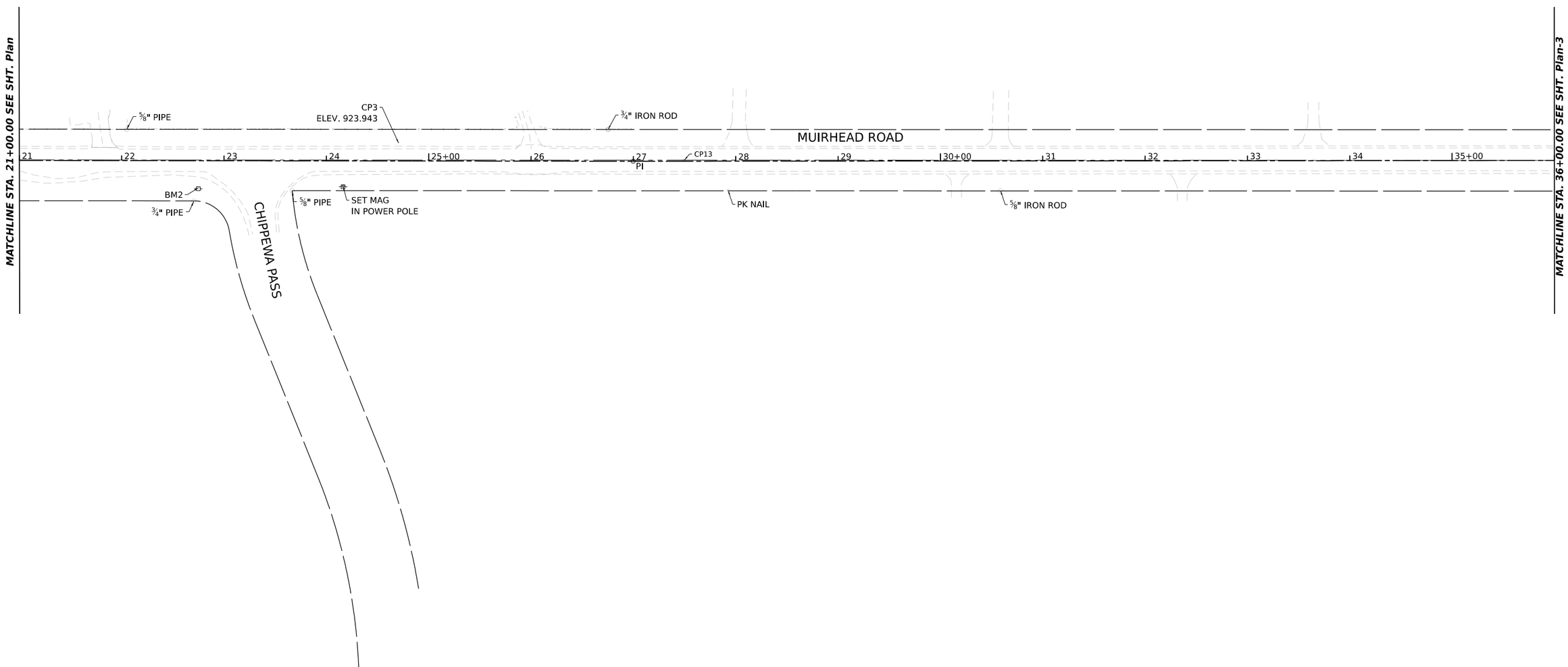

MODEL: P_MUIRHEAD - Plan-2 [Sheet]
FILE NAME: P:\2022\220616\Cad\02 Design\CADD_Sheets\220616-sht-ATB.dgn

HAMPTON, LENZINI AND RENWICK, INC.
1707 N KANDALL ROAD, SUITE 100
ELGIN, ILLINOIS 60123
ILLINOIS PROFESSIONAL DESIGN FIRM
LS / PE / SE CORP. 184.000959

USER NAME = ajungermann	DESIGNED - ____	REVISED - ____	
	DRAWN - ____	REVISED - ____	
PLOT SCALE = 0.16666667 ' / in.	CHECKED - ____	REVISED - ____	
PLOT DATE = 3/18/2025	DATE - ____	REVISED - ____	

PLATO TOWNSHIP ROAD DISTRICT

MUIRHEAD ROAD OVER CHICAGO CENTRAL AND PACIFIC RAILROAD
ALIGNMENT, TIES & BENCHMARKS

SCALE: 1"=50' | SHEET 2 OF 4 SHEETS | STA. TO STA.

F.A. RTE.	SECTION	COUNTY	TOTAL SHEETS	SHEET NO.
	17-12082-01-BR	KANE	88	14
		CONTRACT NO. 61K26		
	ILLINOIS	FED. AID PROJECT		

MUIRHEAD ROAD			
TYPE	STATION	NORTHING	EASTING
POT	15+11.58	1949621.355	960505.666
PC	15+46.41	1949643.362	960532.658
PI	16+39.76	1949702.352	960605.008
PT	17+20.42	1949795.698	960604.056
PI	20+86.77	1950162.028	960600.318
PI	26+99.75	1950774.979	960594.03
PI	41+93.92	1952269.032	960575.258
PI	46+76.35	1952751.429	960570.128
POT	49+52.54	1953027.621	960568.203

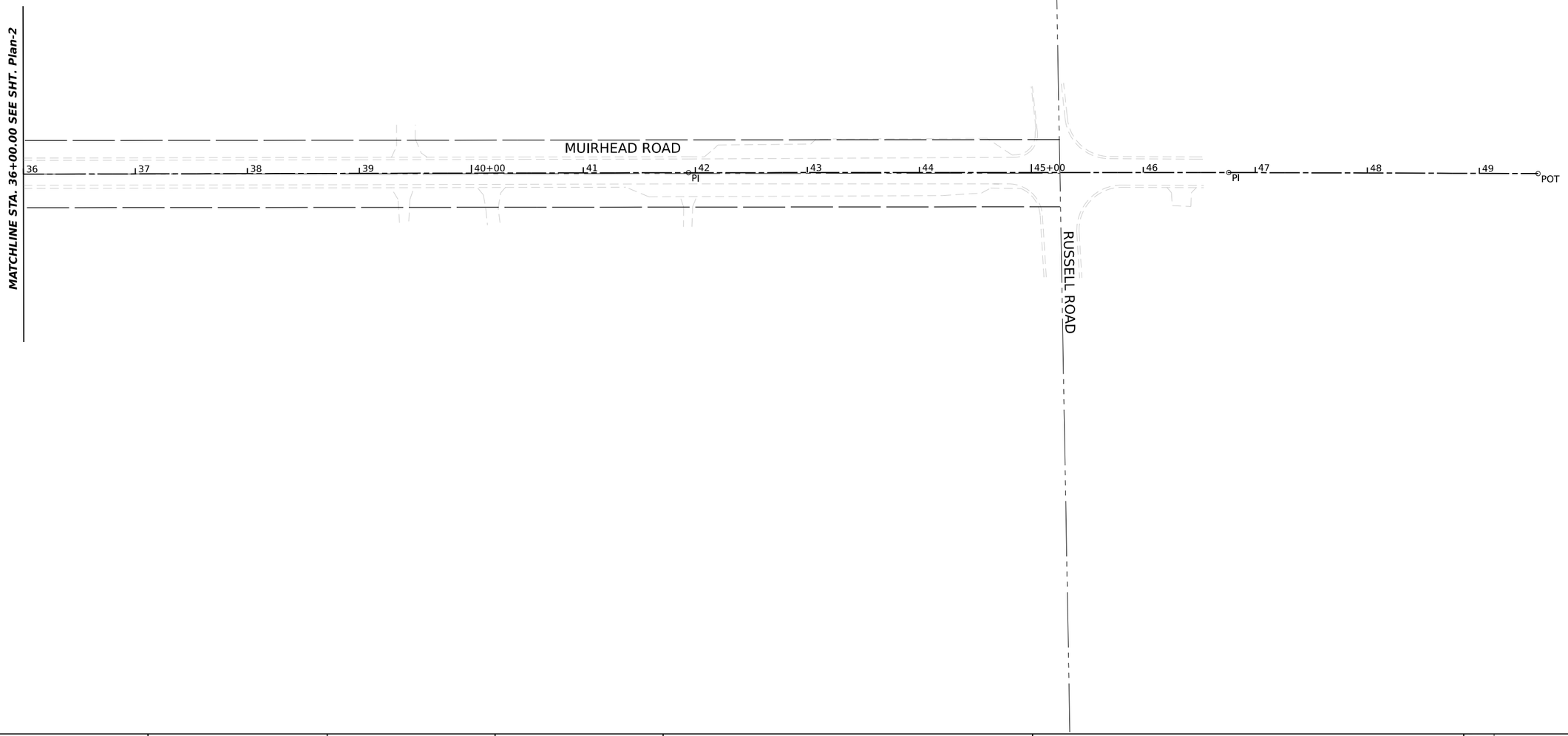

MODEL: P_MUIRHEAD - Plan-3 [Sheet]
FILE NAME: P:\2022\220616\Cad\02 Design\CADD Sheets\220616-sht-ATB.dgn

HAMPTON, LENZINI AND RENWICK, INC. 1707 N RANDALL ROAD, SUITE 100 ELGIN, ILLINOIS 60123 ILLINOIS PROFESSIONAL DESIGN FIRM L.S / PE / SE CORP: 184-000959	USER NAME = ajungermann	DESIGNED - ____	REVISED - ____	PLATO TOWNSHIP ROAD DISTRICT
		DRAWN - ____	REVISED - ____	
	PLOT SCALE = 0.16666667 ' / in.	CHECKED - ____	REVISED - ____	
	PLOT DATE = 3/18/2025	DATE - ____	REVISED - ____	

MUIRHEAD ROAD OVER CHICAGO CENTRAL AND PACIFIC RAILROAD
ALIGNMENT, TIES & BENCHMARKS

SCALE: 1"=50' | SHEET 3 OF 4 SHEETS | STA. TO STA.

F.A. RTE.	SECTION	COUNTY	TOTAL SHEETS	SHEET NO.
	17-12082-01-BR	KANE	88	15
		CONTRACT NO. 61K26		
	ILLINOIS	FED. AID PROJECT		

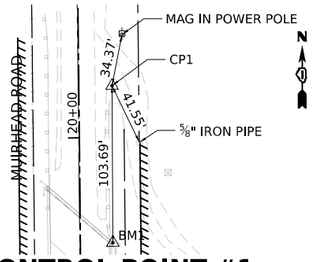

CONTROL POINT #1

SET IRON ROD, HLR CAP
STA. 20+34.17, 21.94' RT
N. 1,950,109.660
E. 960,622.790
ELEV. 923.601

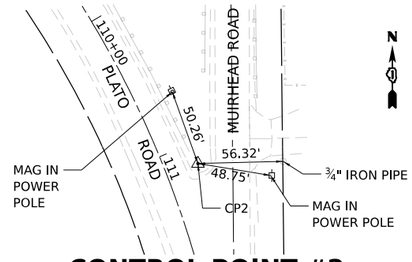

CONTROL POINT #2

NOT SPECIFIED
STA. 15+11.58, 132.50' RT
N. 1,949,514.322
E. 960,584.058
ELEV. 919.174

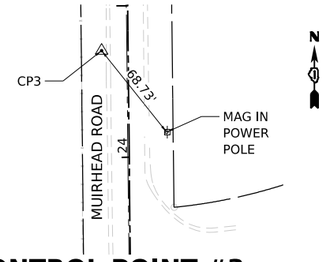

CONTROL POINT #3

IRON ROD CAP
STA. 24+70.52, 17.50' LT
N. 1,950,545.584
E. 960,578.886
ELEV. 923.943

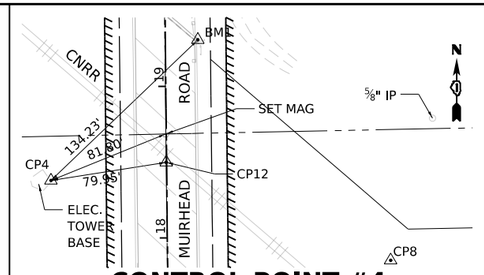

CONTROL POINT #4

SET CROSS NOTCH IN □
STA. 18+38.67, 76.43' LT
N. 1,949,913.162
E. 960,526.421
ELEV. 924.321

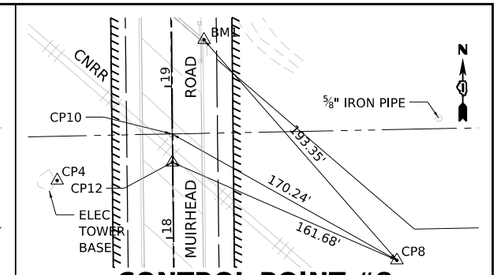

CONTROL POINT #8

SET IRON ROD, HLR CAP
STA. 17+83.70, 147.26' RT
N. 1,949,860.474
E. 960,750.661
ELEV. 912.543

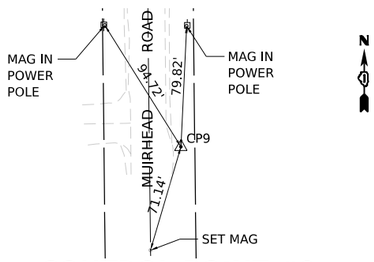

CONTROL POINT #9

SET IRON ROD, HLR CAP

N. 1,949,093.394
E. 960,632.449
ELEV. 918.707

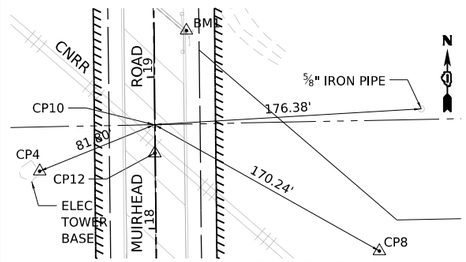

CONTROL POINT #10

SET MAG, ¼ ¼ COR.
STA. 18+68.59, 0.29' LT
N. 1,949,943.890
E. 960,602.267
ELEV. 926.468

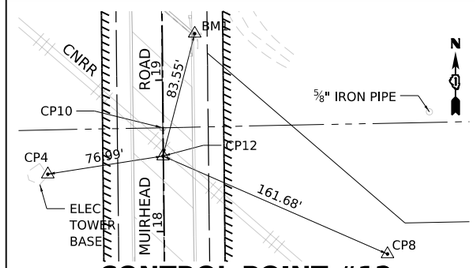

CONTROL POINT #12

SET MAG
STA. 18+49.84, 0.26' LT
N. 1,949,925.114
E. 960,602.474
ELEV. 926.50

HAMPTON, LENZINI AND RENWICK, INC.
1707 N RANDALL ROAD, SUITE 100
ELGIN, ILLINOIS 60123
ILLINOIS PROFESSIONAL DESIGN FIRM
LS / PE / SE CORP. 184.000959

USER NAME = ajungermann	DESIGNED - ____	REVISED - ____
	DRAWN - ____	REVISED - ____
PLOT SCALE = 0.16666667 ' / in.	CHECKED - ____	REVISED - ____
PLOT DATE = 3/18/2025	DATE - ____	REVISED - ____

PLATO TOWNSHIP
ROAD DISTRICT

MUIRHEAD ROAD OVER CHICAGO CENTRAL AND PACIFIC RAILROAD
ALIGNMENT, TIES & BENCHMARKS

SCALE: 1"=50' | SHEET 4 OF 4 SHEETS | STA. TO STA.

F.A. RTE.	SECTION	COUNTY	TOTAL SHEETS	SHEET NO.
	17-12082-01-BR	KANE	88	16

CONTRACT NO. 61K26

ILLINOIS | FED. AID PROJECT

MODEL: P_MUIRHEAD - Ties Sheet
FILE NAME: P:\2022\220616\Cad\02 Design\CADD_Sheets\220616-sht-ATB.dgn

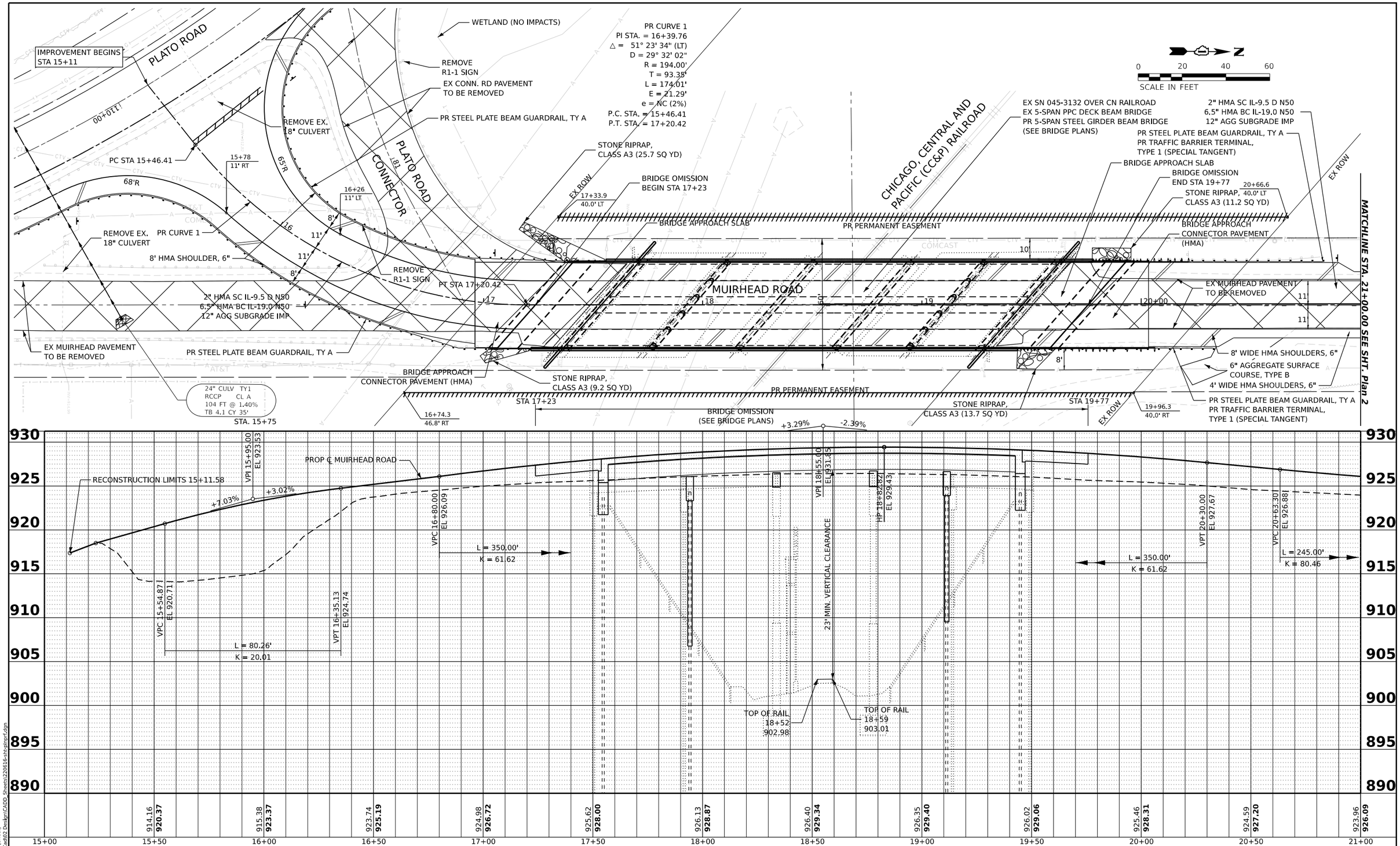

PLAN			
NOTE BOOK NO.	SURVEYED	PLOTTED	RT. OF WAY CHECKED
	BY:	DATE	CADD FILE NAME

PROFILE			
NOTE BOOK NO.	SURVEYED	PLOTTED	CROSSS CHECKED
	BY:	DATE	R.R. NOTED
			STRUCTURE NOTATNS CHKD

MODEL: P_MUIRHEAD - Plan 1 [Sheet]
FILE NAME: P:\2022\220616\Cad\02 Design\CADD_Sheets\220616-sht-plnprf.dgn

HAMPTON, LENZINI AND RENWICK, INC.
1707 N RANDALL ROAD, SUITE 100
ELGIN, ILLINOIS 60123
ILLINOIS PROFESSIONAL DESIGN FIRM
LS / PE / SE CORP. 184.000959

USER NAME = ajungermann	DESIGNED -	REVISED -	
	DRAWN -	REVISED -	
PLOT SCALE = 0.16666667 ' / in.	CHECKED -	REVISED -	
PLOT DATE = 3/18/2025	DATE -	REVISED -	

PLATO TOWNSHIP
ROAD DISTRICT

MUIRHEAD ROAD OVER CHICAGO, CENTRAL AND PACIFIC RAILROAD
PLAN AND PROFILE

SCALE: 1"=20' | SHEET OF SHEETS | STA. TO STA.

F.A. RTE.	SECTION	COUNTY	TOTAL SHEETS	SHEET NO.
	17-12082-01-BR	KANE	88	17
		CONTRACT NO. 61K26		
	ILLINOIS	FED. AID PROJECT		

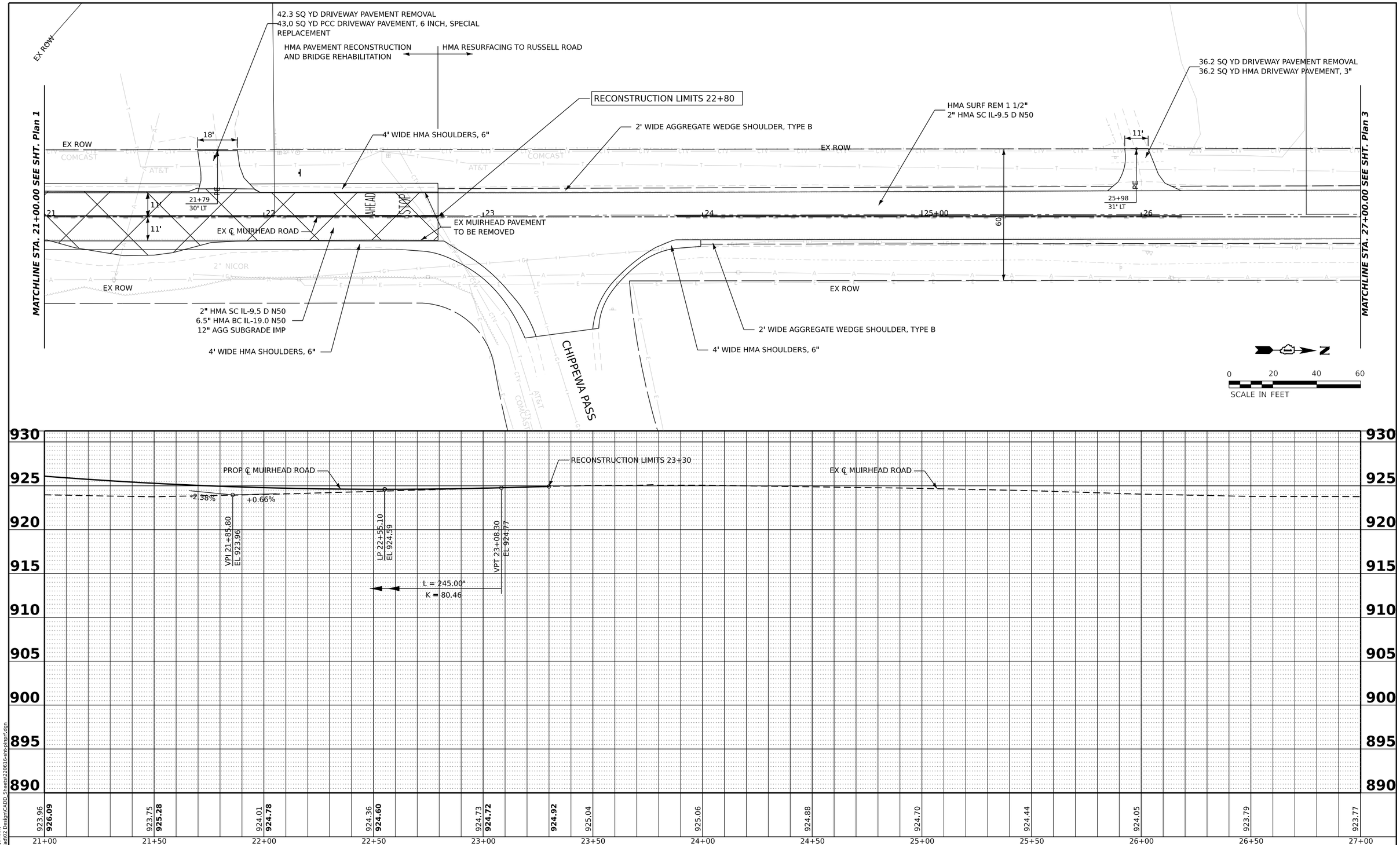

PLAN
SURVEYED
PLOTTED
ALIGNMENT CHECKED
RT. OF WAY CHECKED
CADD FILE NAME
NOTE BOOK NO.
BY
DATE

PROFILE
SURVEYED
PLOTTED
GRADES CHECKED
B.M. NOTED
STRUCTURE NOTAT'NS CHK'D
NOTE BOOK NO.
BY
DATE

MODEL: P_MUIRHEAD - Plan 2 [Sheet]
FILE NAME: P:\2022\220616\Cad\02 Design\CADD_Sheets\220616-sht-plnprf.dgn

HAMPTON, LENZINI AND RENWICK, INC.
1707 N RANDALL ROAD, SUITE 100
ELGIN, ILLINOIS 60123
ILLINOIS PROFESSIONAL DESIGN FIRM
LS / PE / SE CORP. 184.000959

USER NAME = ajungermann	DESIGNED -	REVISED -	
	DRAWN -	REVISED -	
PLOT SCALE = 0.16666667 ' / in.	CHECKED -	REVISED -	
PLOT DATE = 3/18/2025	DATE -	REVISED -	

PLATO TOWNSHIP
ROAD DISTRICT

MUIRHEAD ROAD OVER CHICAGO, CENTRAL AND PACIFIC RAILROAD
PLAN AND PROFILE

SCALE: 1"=20' | SHEET OF SHEETS | STA. TO STA.

F.A. RTE.	SECTION	COUNTY	TOTAL SHEETS	SHEET NO.
	17-12082-01-BR	KANE	88	18
		CONTRACT NO. 61K26		
	ILLINOIS	FED. AID PROJECT		

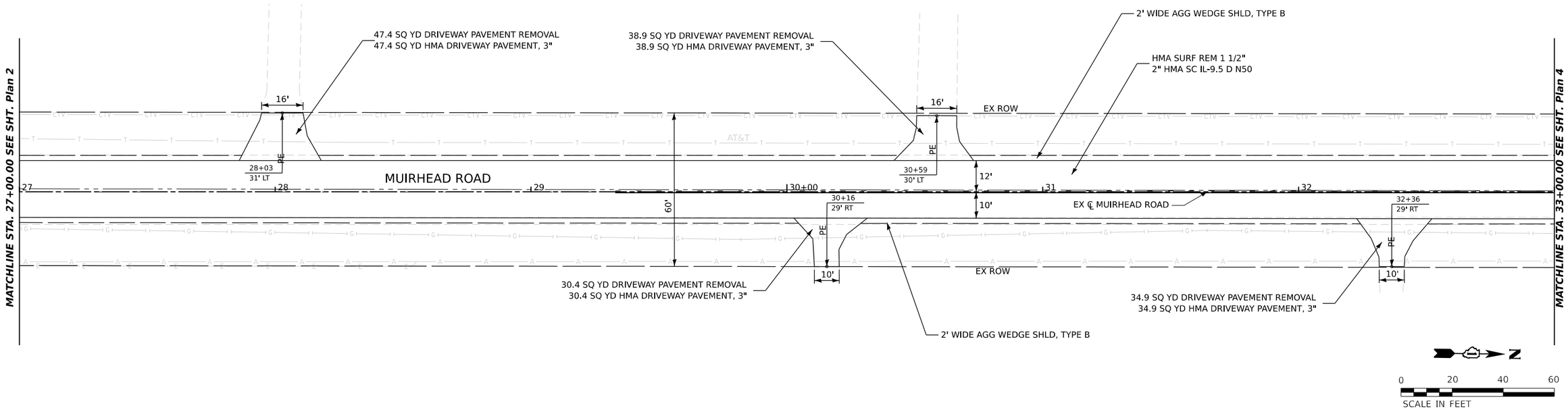

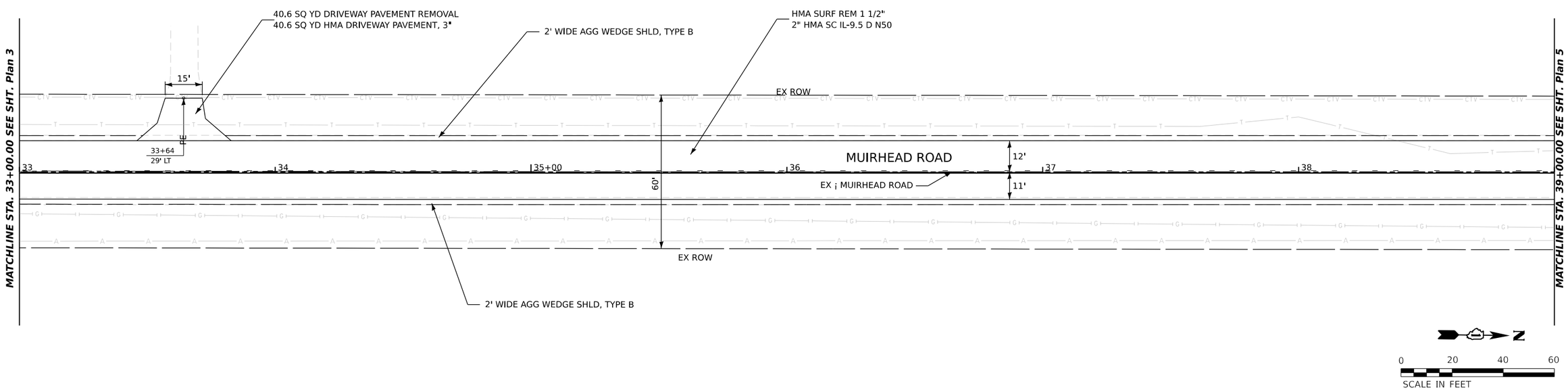

MODEL: P_MUIRHEAD-1 - Plan 3 [Sheet]
FILE NAME: P:\2022\220616\Cad\02 Design\CADD_Sheets\220616-sht-plnprf.dgn

HAMPTON, LENZINI AND RENWICK, INC. 1707 N RANDALL ROAD, SUITE 100 ELGIN, ILLINOIS 60123 ILLINOIS PROFESSIONAL DESIGN FIRM LS / PE / SE CORP. 184.000959	USER NAME = ajungermann	DESIGNED -	REVISED -	PLATO TOWNSHIP ROAD DISTRICT	MUIRHEAD ROAD OVER CHICAGO, CENTRAL AND PACIFIC RAILROAD PLAN SHEET	F.A. RTE.	SECTION	COUNTY	TOTAL SHEETS / SHEET NO.
		DRAWN -	REVISED -				17-12082-01-BR	KANE	88 / 19
	PLOT SCALE = 0.16666667 ' / in.	CHECKED -	REVISED -					CONTRACT NO. 61K26	
	PLOT DATE = 3/18/2025	DATE -	REVISED -		SCALE: SHEET OF SHEETS STA. TO STA.		ILLINOIS	FED. AID PROJECT	

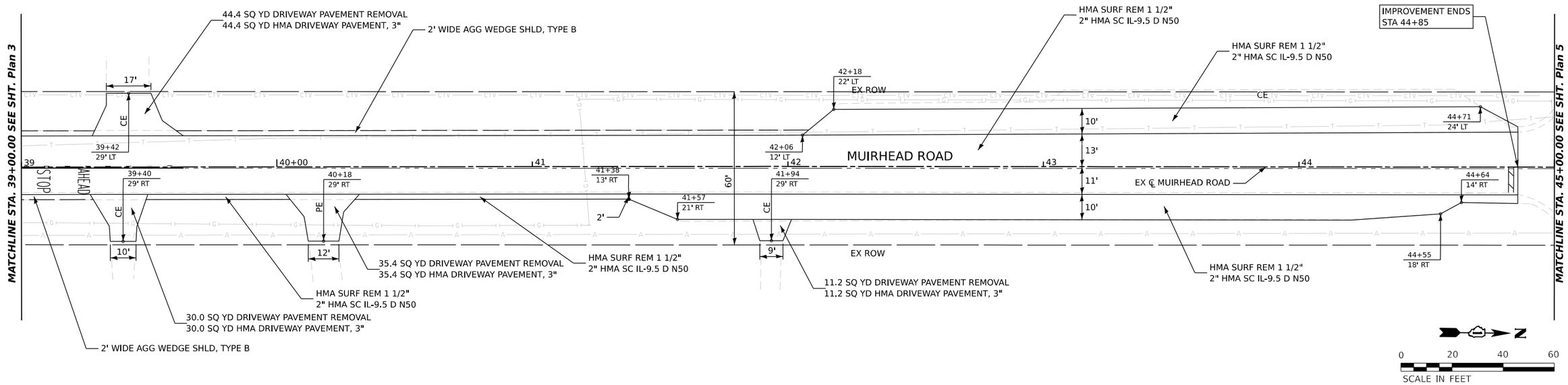

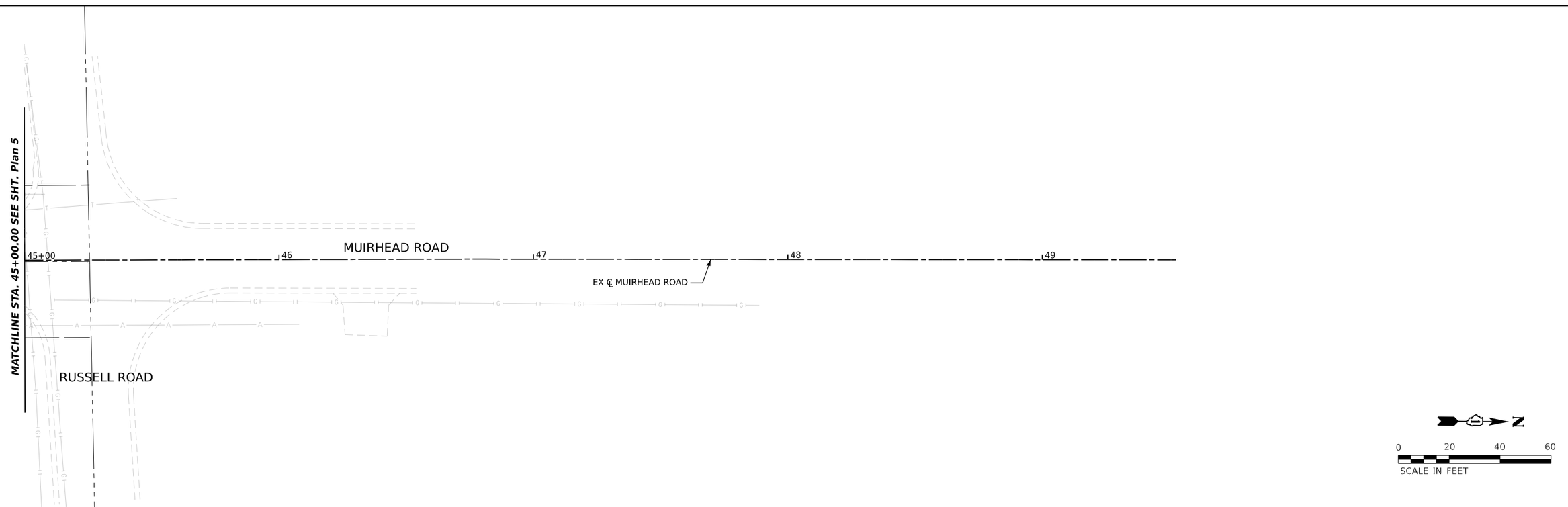

MODEL: P_MUIRHEAD-1 - Plan 5 [Sheet]
FILE NAME: P:\2022\220616\Cad\02 Design\CADD_Sheets\220616-sht-plnprf.dgn

HAMPTON, LENZINI AND RENWICK, INC.
1707 N RANDALL ROAD, SUITE 100
ELGIN, ILLINOIS 60123
ILLINOIS PROFESSIONAL DESIGN FIRM
LS / PE / SE CORP. 184.000959

USER NAME = ajungermann	DESIGNED -	REVISED -	
	DRAWN -	REVISED -	
PLOT SCALE = 0.16666667 ' / in.	CHECKED -	REVISED -	
PLOT DATE = 3/18/2025	DATE -	REVISED -	

PLATO TOWNSHIP
ROAD DISTRICT

MUIRHEAD ROAD OVER CHICAGO, CENTRAL AND PACIFIC RAILROAD
PLAN SHEET

SCALE: SHEET OF SHEETS STA. TO STA.

F.A. RTE.	SECTION	COUNTY	TOTAL SHEETS	SHEET NO.
	17-12082-01-BR	KANE	88	20
		CONTRACT NO. 61K26		
	ILLINOIS	FED. AID PROJECT		

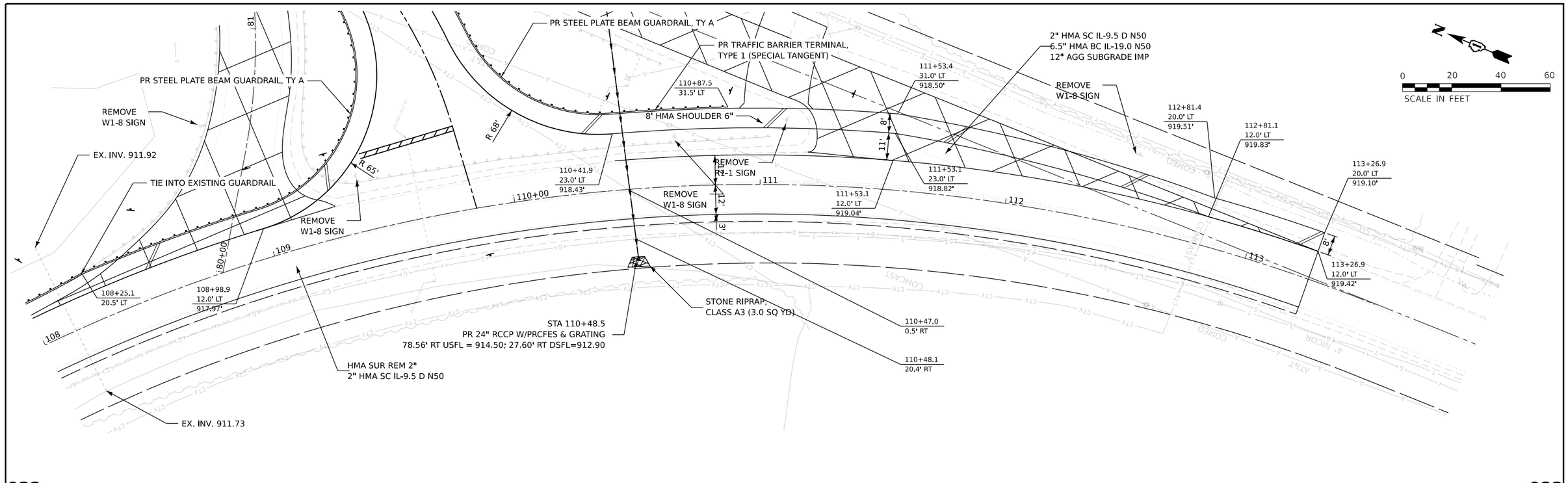

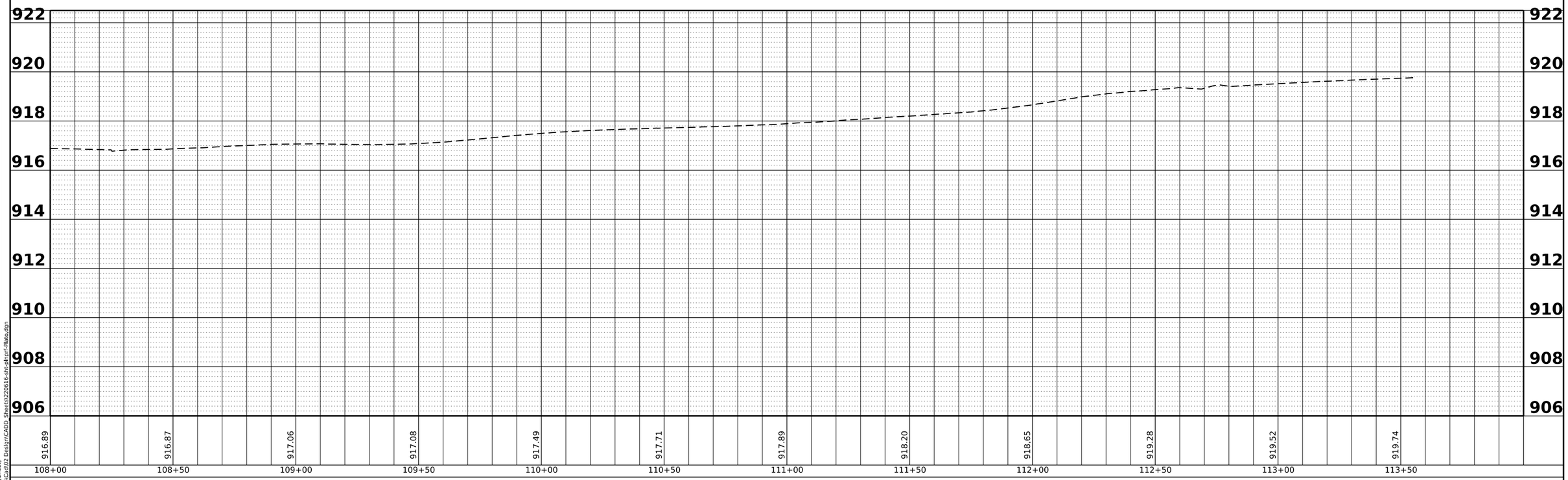

PLAN		BY	DATE
NOTE BOOK NO._____	SURVEYED PLOTTED ALIGNMENT CHECKED RT. OF WAY CHECKED CADD FILE NAME		

PROFILE		BY	DATE
NOTE BOOK NO._____	SURVEYED PLOTTED GRADES CHECKED B.M. NOTED STRUCTURE NOTAT'NS CH'KD		

MODEL: E_PLATO-1 - Plan 1 [Sheet]
FILE NAME: P:\2022\220616\Cad\02 Design\CADD_Sheets\220616-sht-dbport-Plato.dgn

HAMPTON, LENZINI AND RENWICK, INC.
1707 N RANDALL ROAD, SUITE 100
ELGIN, ILLINOIS 60123
ILLINOIS PROFESSIONAL DESIGN FIRM
LS / PE / SE CORP. 184.000959

USER NAME = ajungermann	DESIGNED -	REVISED -	
	DRAWN -	REVISED -	
PLOT SCALE = 0.16666633 ' / in.	CHECKED -	REVISED -	
PLOT DATE = 3/18/2025	DATE -	REVISED -	

PLATO TOWNSHIP ROAD DISTRICT

MUIRHEAD ROAD OVER CHICAGO, CENTRAL AND PACIFIC RAILROAD
PLAN AND PROFILE

SCALE: 1"=20' | SHEET OF SHEETS | STA. TO STA.

F.A. RTE.	SECTION	COUNTY	TOTAL SHEETS	SHEET NO.
	17-12082-01-BR	KANE	88	21
		CONTRACT NO. 61K26		
	ILLINOIS	FED. AID PROJECT		

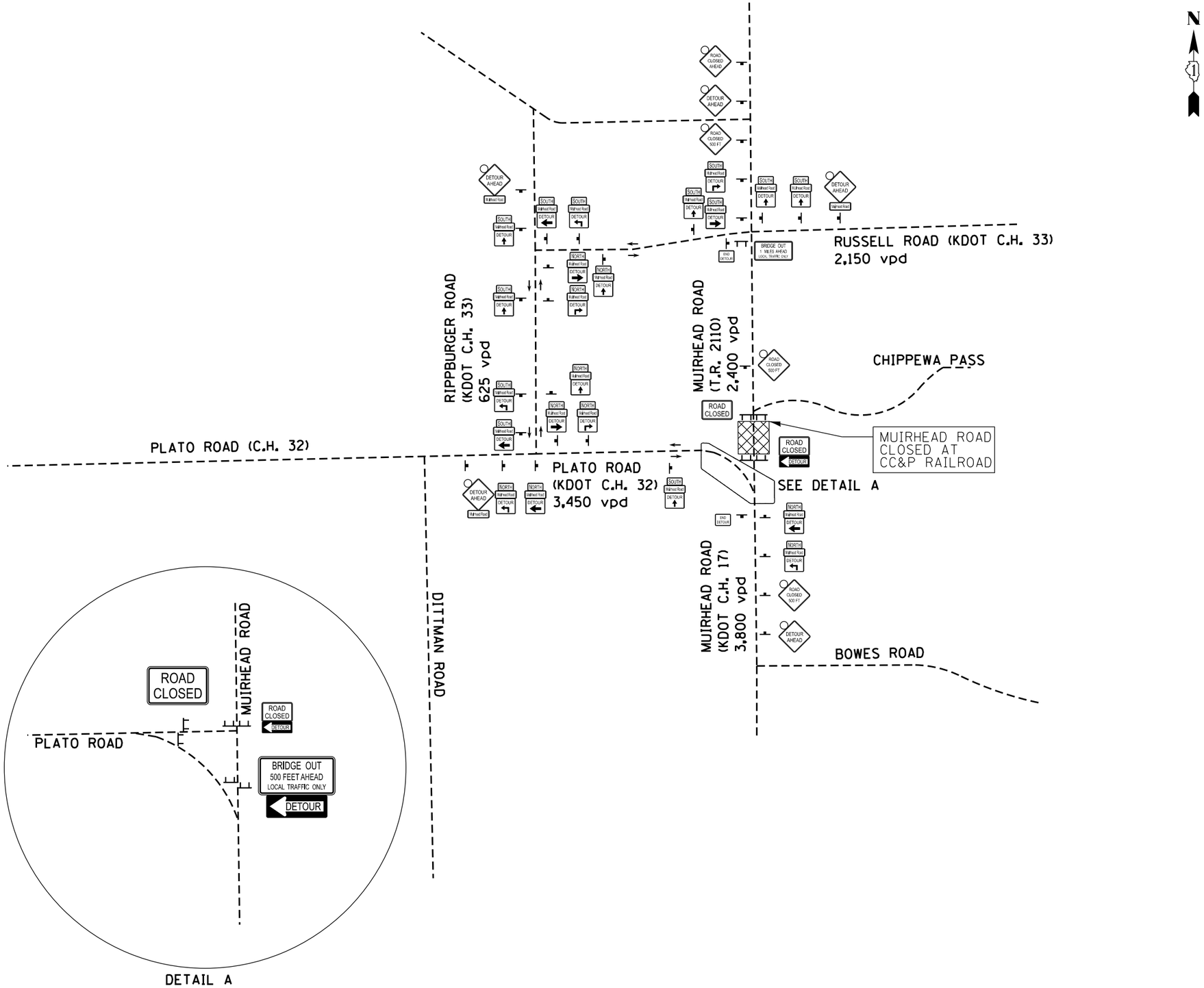

DETOUR SIGN TYPE AND SIZE

ALL SIGN COLORS SHALL BE ACCORDING TO THE LATEST EDITION OF THE MUTCD

ROAD CLOSED AHEAD	W20-3	48"x48"
ROAD CLOSED 500 FT	W20-3	48"x48"
DETOUR AHEAD	W20-2	48"x48"
ROAD CLOSED	R11-2	48"x30"
DETOUR	M4-10L	48"x18"
DETOUR	M4-10R	48"x18"
DETOUR	M4-9	48"x36"
DETOUR	M4-9	48"x36"
DETOUR	M4-9	48"x36"
DETOUR	M4-9	48"x36"
DETOUR	M4-9	48"x36"
NORTH	M3-1(O)	21"x12"
SOUTH	M3-3(O)	21"x12"
END DETOUR	M4-8A	24"x18"
BRIDGE OUT 1 MILES AHEAD LOCAL TRAFFIC ONLY	R11-3b	60"x30"
BRIDGE OUT 500 FEET AHEAD LOCAL TRAFFIC ONLY	R11-3b	60"x30"
Muirhead Road	W16-8P	36"x18"
	TYPE III BARRICADE	
	SIGN	
	LIGHT	

MODEL: P_MUIRHEAD - Plan 1 [Sheet]
FILE NAME: P:\2022\220616\Cad\02 Design\CADD_Sheets\220616-sht-detour.dgn

HAMPTON, LENZINI AND RENWICK, INC.
1707 N RANDALL ROAD, SUITE 100
ELGIN, ILLINOIS 60123
ILLINOIS PROFESSIONAL DESIGN FIRM
LS / PE / SE CORP. 184.000959

USER NAME = ajungermann	DESIGNED -	REVISED -	
	DRAWN -	REVISED -	
PLOT SCALE = 0.16666633 ' / in.	CHECKED -	REVISED -	
PLOT DATE = 3/18/2025	DATE -	REVISED -	

PLATO TOWNSHIP
ROAD DISTRICT

MUIRHEAD ROAD OVER CHICAGO CENTRAL AND PACIFIC RAILROAD
DETOUR PLAN

SCALE: | SHEET OF SHEETS | STA. TO STA.

F.A. RTE.	SECTION	COUNTY	TOTAL SHEETS	SHEET NO.
	17-12082-01-BR	KANE	88	28
		CONTRACT NO. 61K26		
	ILLINOIS	FED. AID PROJECT		

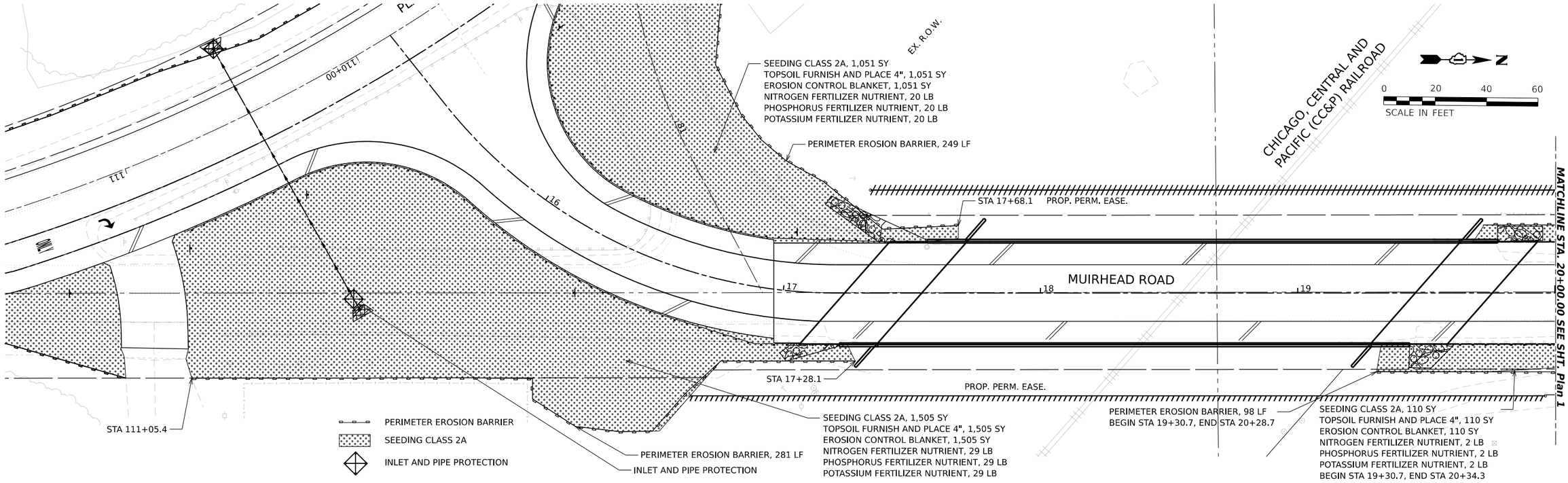

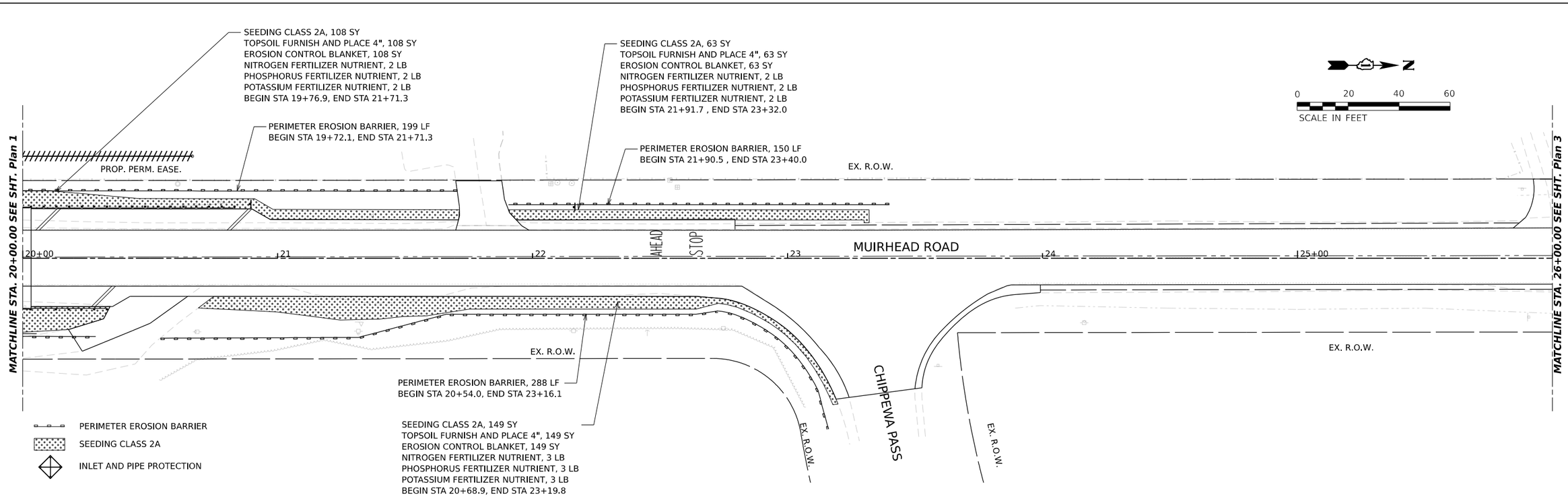

MODEL: P_MUIRHEAD - Plan 1 [Sheet]
FILE NAME: P:\2022\220616\Cad\02 Design\CADD_Sheets\220616-sht-eros.dgn

HAMPTON, LENZINI AND RENWICK, INC. 1707 N RANDALL ROAD, SUITE 100 ELGIN, ILLINOIS 60123 ILLINOIS PROFESSIONAL DESIGN FIRM LS / PE / SE CORP. 184.000959	USER NAME = ajungermann	DESIGNED -	REVISED -	PLATO TOWNSHIP ROAD DISTRICT
		DRAWN -	REVISED -	
	PLOT SCALE = 0.16666667 ' / in.	CHECKED -	REVISED -	
	PLOT DATE = 3/18/2025	DATE -	REVISED -	

MUIRHEAD ROAD OVER CHICAGO, CENTRAL AND PACIFIC RAILROAD
EROSION CONTROL PLANS

SCALE: 1"=20' | SHEET 1 OF 3 SHEETS | STA. | TO STA.

F.A. RTE.	SECTION	COUNTY	TOTAL SHEETS	SHEET NO.
	17-12082-01-BR	KANE	88	23
		CONTRACT NO. 61K26		
	ILLINOIS	FED. AID PROJECT		

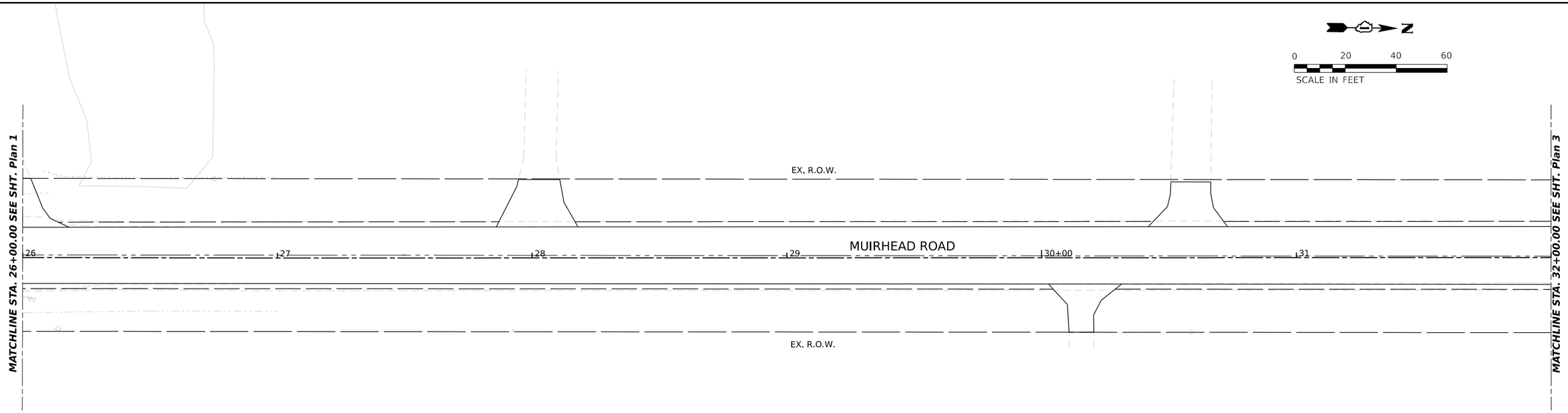

PERIMETER EROSION BARRIER

SEEDING CLASS 2A

INLET AND PIPE PROTECTION

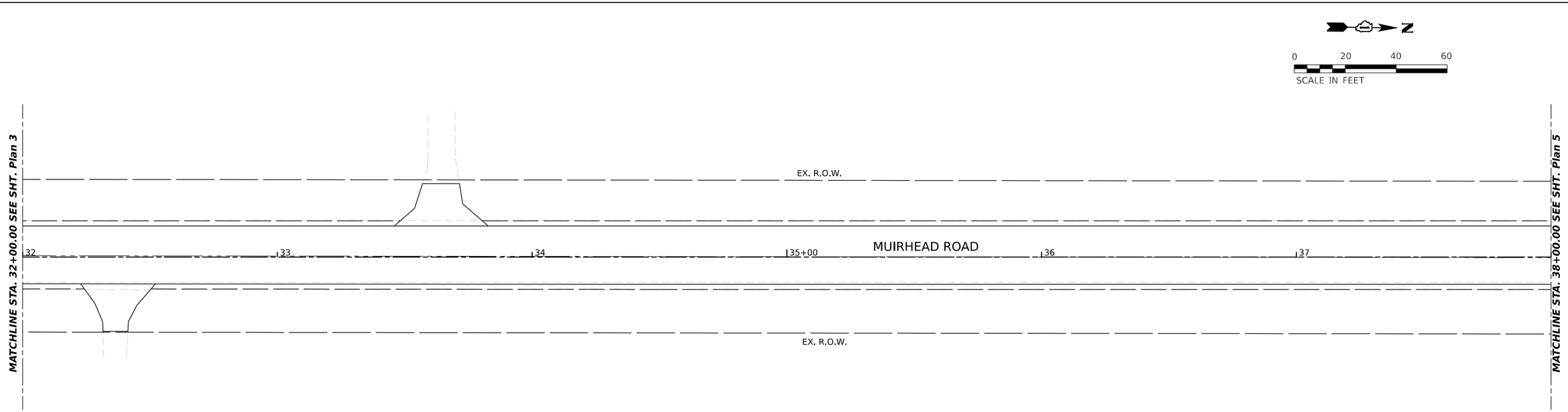

PERIMETER EROSION BARRIER

SEEDING CLASS 2A

INLET AND PIPE PROTECTION

MODEL: P_MUIRHEAD - Plan 3 [Sheet]
FILE NAME: P:\2022\220616\Cadd02 Design\CADD_Sheets\220616-ehs-eros.dgn

HAMPTON, LENZINI AND RENWICK, INC. 1707 N RANDALL ROAD, SUITE 100 ELGIN, ILLINOIS 60123 ILLINOIS PROFESSIONAL DESIGN FIRM LS / PE / SE CORP. 184.000959	USER NAME = ajungermann	DESIGNED -	REVISED -	PLATO TOWNSHIP ROAD DISTRICT	MUIRHEAD ROAD OVER CHICAGO, CENTRAL AND PACIFIC RAILROAD EROSION CONTROL PLANS
		DRAWN -	REVISED -		
	PLOT SCALE = 0.16666667 ' / in.	CHECKED -	REVISED -		
	PLOT DATE = 3/18/2025	DATE -	REVISED -		

SCALE: 1"=20' | SHEET 2 OF 3 SHEETS | STA. TO STA.

F.A. RTE.	SECTION	COUNTY	TOTAL SHEETS	SHEET NO.
	17-12082-01-BR	KANE	88	24
		CONTRACT NO. 61K26		
	ILLINOIS	FED. AID PROJECT		

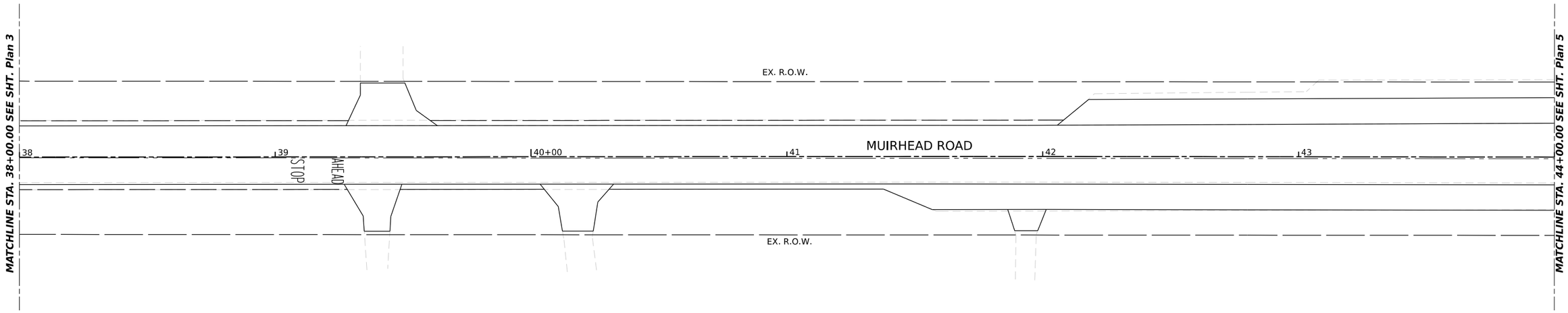

PERIMETER EROSION BARRIER
SEEDING CLASS 2A
INLET AND PIPE PROTECTION

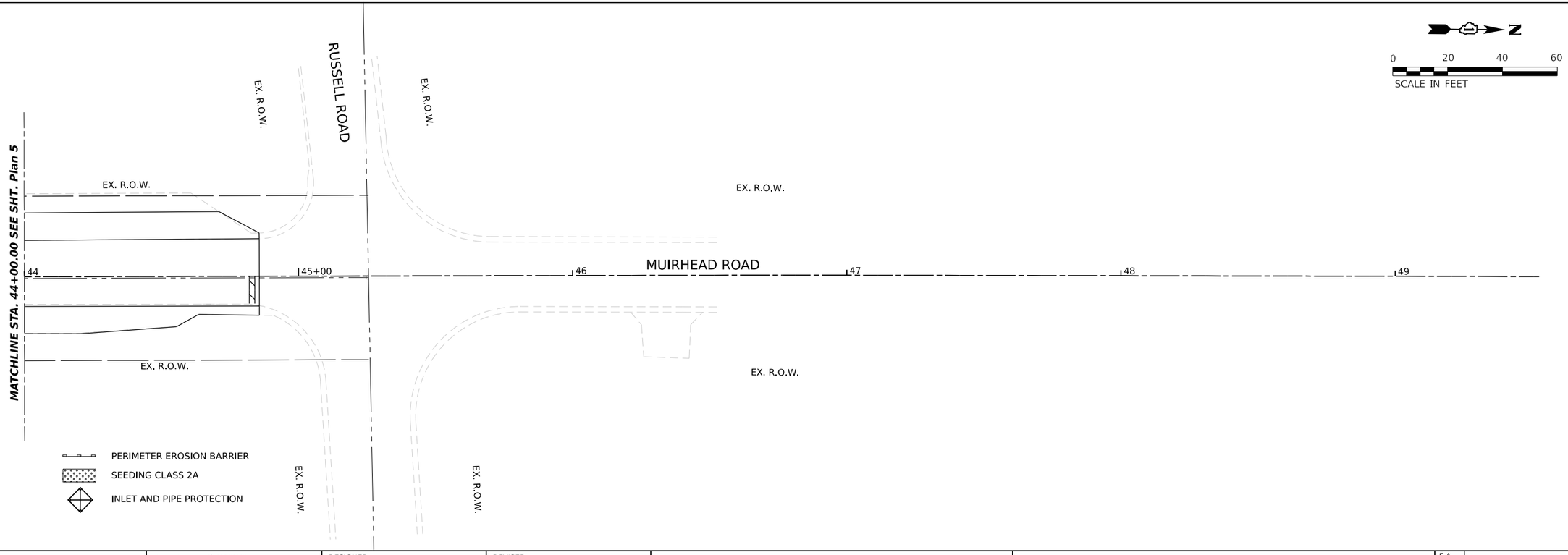

PERIMETER EROSION BARRIER
SEEDING CLASS 2A
INLET AND PIPE PROTECTION

MODEL: P_MUIRHEAD - Plan 5 [Sheet]
FILE NAME: P:\2022\220616\Cad\02 Design\CADD Sheets\220616-sht-eros.dgn

HAMPTON, LENZINI AND RENWICK, INC. 1707 N RANDALL ROAD, SUITE 100 ELGIN, ILLINOIS 60123 ILLINOIS PROFESSIONAL DESIGN FIRM LS / PE / SE CORP. 184.000959	USER NAME = ajungermann	DESIGNED -	REVISED -
		DRAWN -	REVISED -
	PLOT SCALE = 0.16666667 ' / in.	CHECKED -	REVISED -
	PLOT DATE = 3/18/2025	DATE -	REVISED -

PLATO TOWNSHIP
ROAD DISTRICT

MUIRHEAD ROAD OVER CHICAGO, CENTRAL AND PACIFIC RAILROAD
EROSION CONTROL PLANS

SCALE: 1"=20' | SHEET 3 OF 3 SHEETS | STA. | TO STA.

F.A. RTE.	SECTION	COUNTY	TOTAL SHEETS	SHEET NO.
	17-12082-01-BR	KANE	88	25
		CONTRACT NO. 61K26		
	ILLINOIS	FED. AID PROJECT		

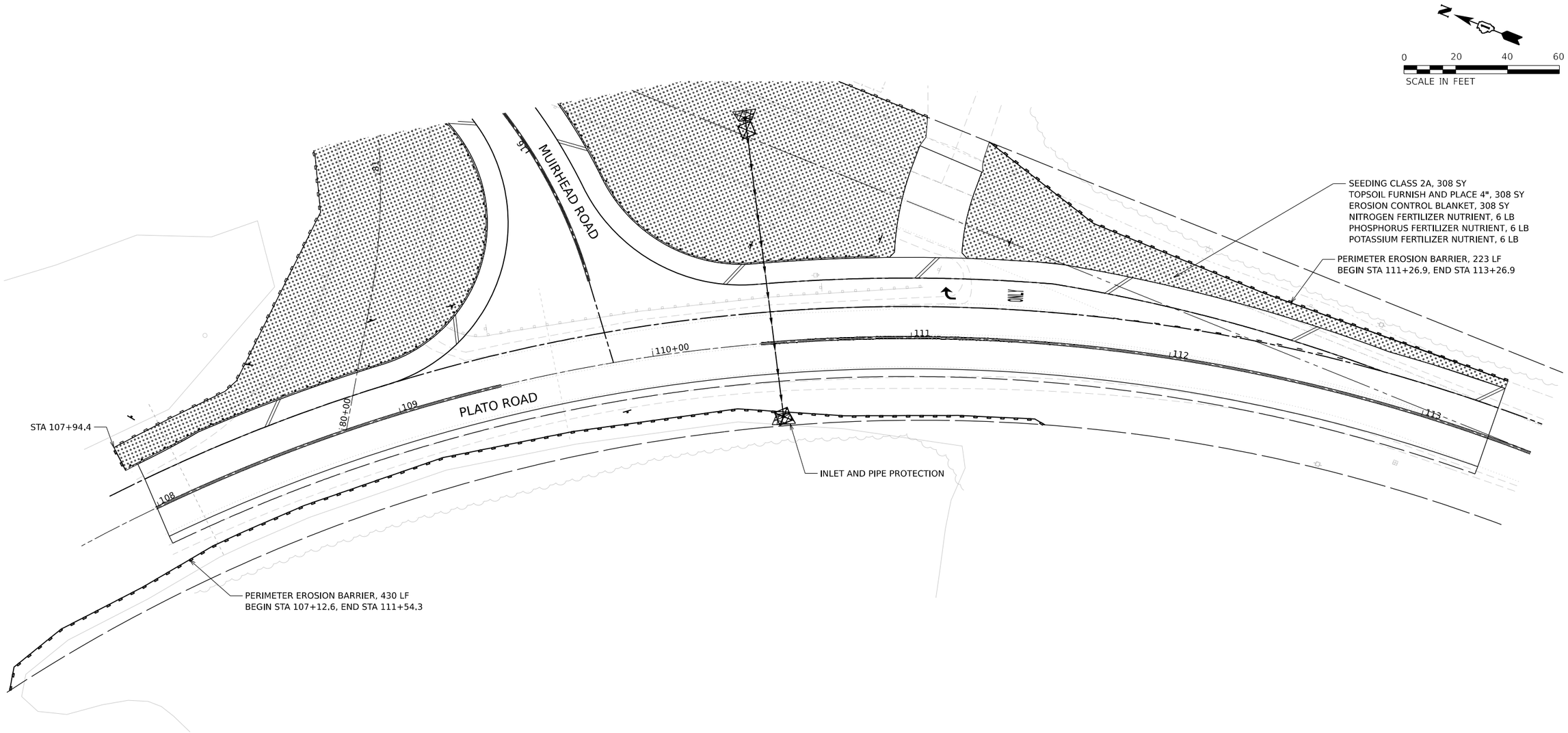

PERIMETER EROSION BARRIER

SEEDING CLASS 2A

INLET AND PIPE PROTECTION

MODEL: E_PLATO - Plan 7 [Sheet]
FILE NAME: P:\2022\220616\cad\02 Design\CADD_Sheets\220616-sht-eros.dgn

HAMPTON, LENZINI AND RENWICK, INC. 1707 N RANDALL ROAD, SUITE 100 ELGIN, ILLINOIS 60123 ILLINOIS PROFESSIONAL DESIGN FIRM LS / PE / SE CORP. 184.000959	USER NAME = ajungermann	DESIGNED -	REVISED -	PLATO TOWNSHIP ROAD DISTRICT	MUIRHEAD ROAD OVER CHICAGO CENTRAL AND PACIFIC RAILROAD EROSION CONTROL PLANS
		DRAWN -	REVISED -		
	PLOT SCALE = 0.16666633 ' / in.	CHECKED -	REVISED -		
	PLOT DATE = 3/18/2025	DATE -	REVISED -		SCALE: SHEET OF SHEETS STA. TO STA.

F.A. RTE.	SECTION	COUNTY	TOTAL SHEETS	SHEET NO.
	17-12082-01-BR	KANE	88	26
		CONTRACT NO. 61K26		
	ILLINOIS	FED. AID PROJECT		

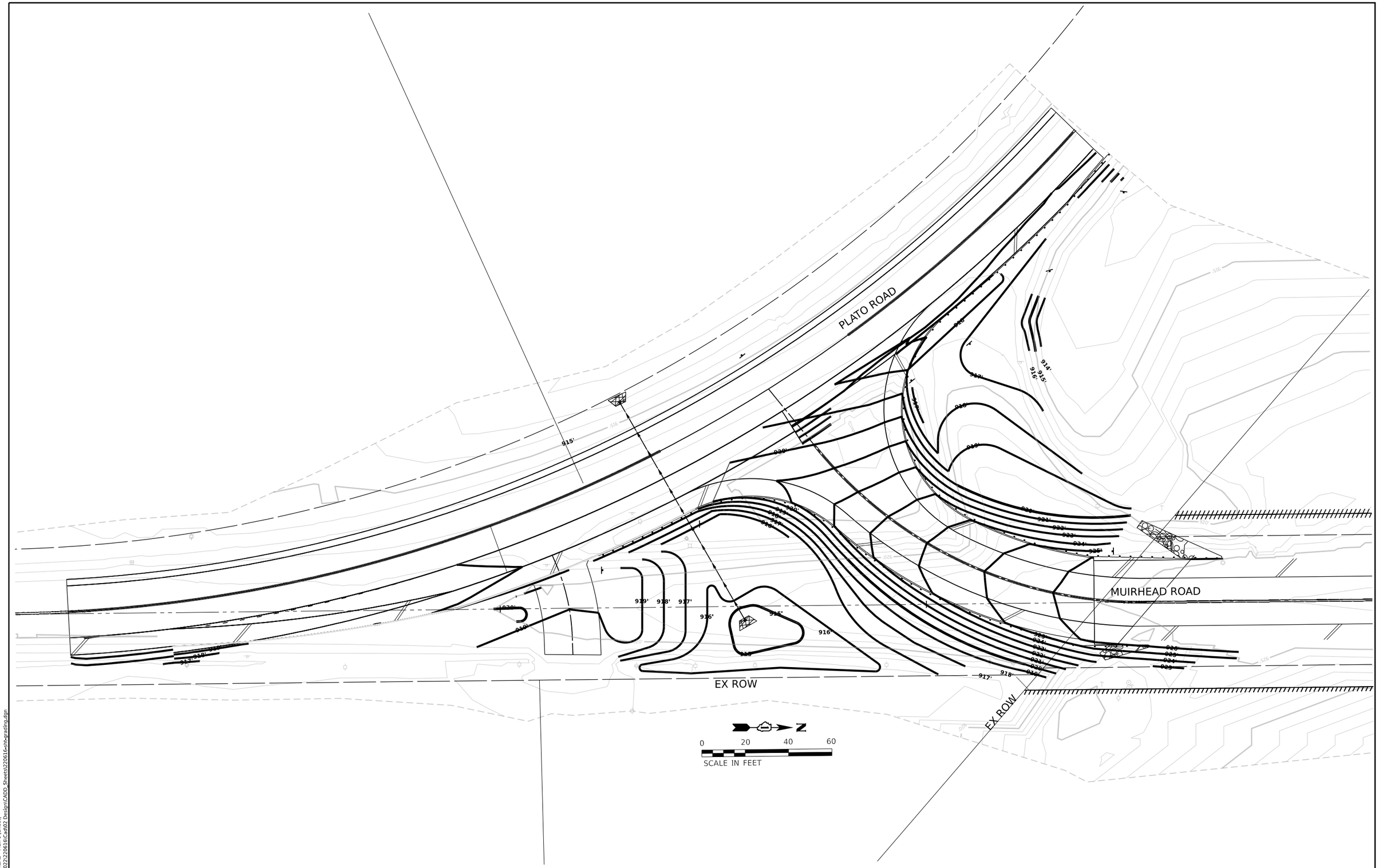

MODEL: P_MUIRHEAD - Plan 1 [Sheet]
FILE NAME: P:\2022\220616\Cad\02 Design\CADD_Sheets\22061 6-sht-grading.dgn

HAMPTON, LENZINI AND RENWICK, INC. 1707 N RANDALL ROAD, SUITE 100 ELGIN, ILLINOIS 60123 ILLINOIS PROFESSIONAL DESIGN FIRM LS / PE / SE CORP. 184.000959	USER NAME = ajungermann	DESIGNED -	REVISED -	PLATO TOWNSHIP ROAD DISTRICT	MUIRHEAD ROAD OVER CHICAGO CENTRAL AND PACIFIC RAILROAD GRADING PLAN	F.A. RTE.	SECTION	COUNTY	TOTAL SHEETS / SHEET NO.
		DRAWN -	REVISED -				17-12082-01-BR	KANE	88 / 27
	PLOT SCALE = 0.16666633 ' / in.	CHECKED -	REVISED -					CONTRACT NO. 61K26	
	PLOT DATE = 3/18/2025	DATE -	REVISED -		SCALE: SHEET OF SHEETS STA. TO STA.		ILLINOIS	FED. AID PROJECT	

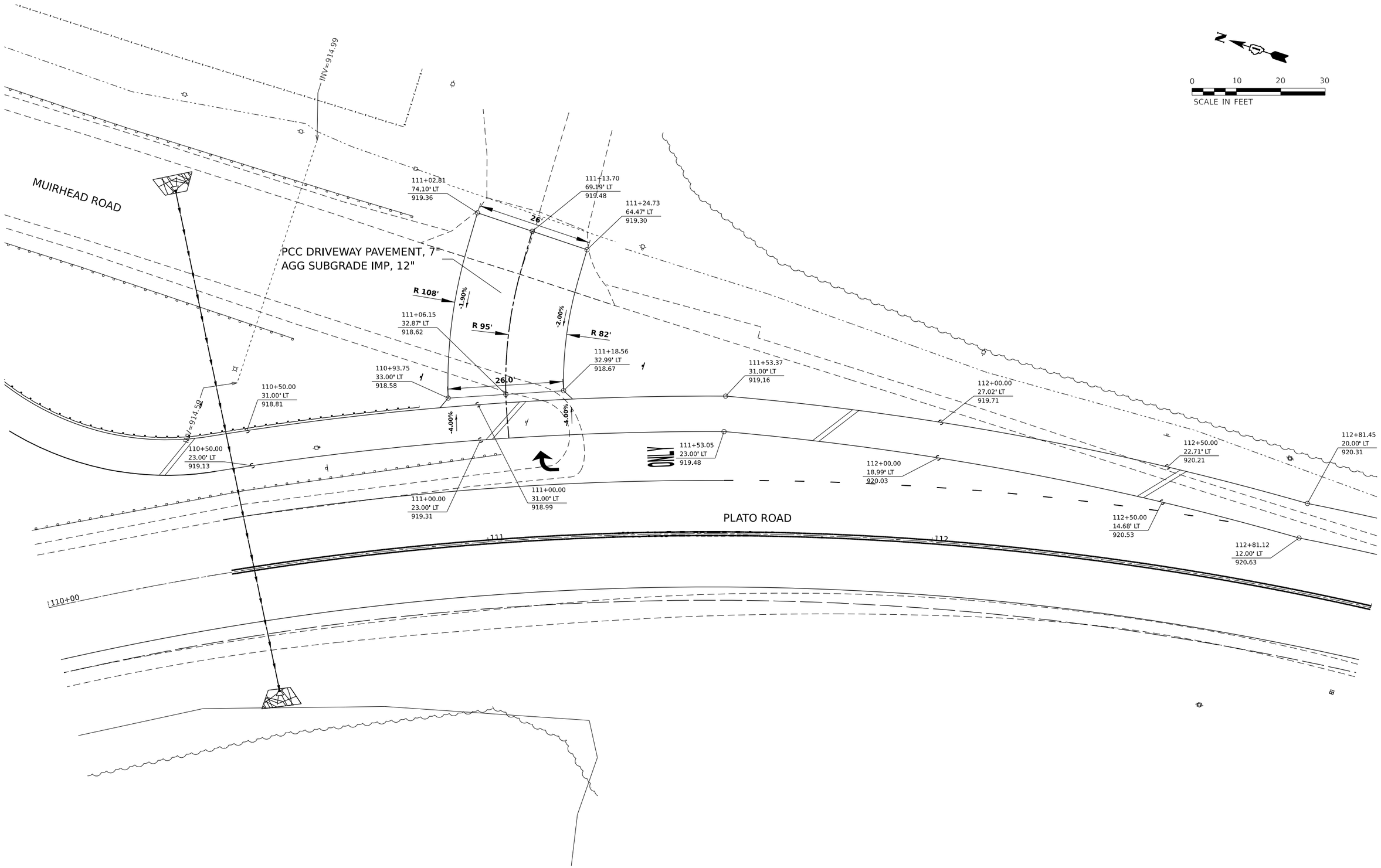

MODEL: E_PLATO - Plan 1 [Sheet]
FILE NAME: P:\2022\220616\Cad\02 Design\CADD Sheets\220616-sht-detail plan.dgn

HAMPTON, LENZINI AND RENWICK, INC. 1707 N RANDALL ROAD, SUITE 100 ELGIN, ILLINOIS 60123 ILLINOIS PROFESSIONAL DESIGN FIRM LS / PE / SE CORP. 184.000959	USER NAME = ajungermann	DESIGNED -	REVISED -	PLATO TOWNSHIP ROAD DISTRICT	MUIRHEAD ROAD OVER CHICAGO CENTRAL AND PACIFIC RAILROAD DETAIL PLAN	F.A. RTE.	SECTION	COUNTY	TOTAL SHEETS	SHEET NO.
		DRAWN -	REVISED -				17-12082-01-BR	KANE	88	22
	PLOT SCALE = 0.16666667 ' / in.	CHECKED -	REVISED -					CONTRACT NO. 61K26		
	PLOT DATE = 3/18/2025	DATE -	REVISED -		SCALE: 1"=10' SHEET OF SHEETS STA. TO STA.		ILLINOIS	FED. AID PROJECT		

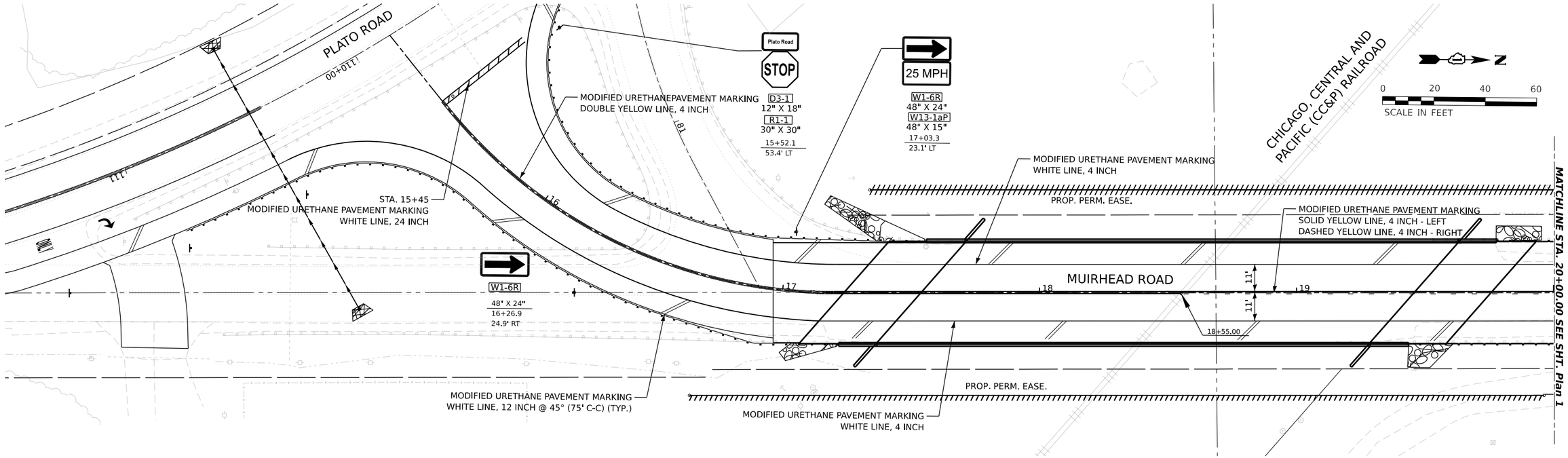

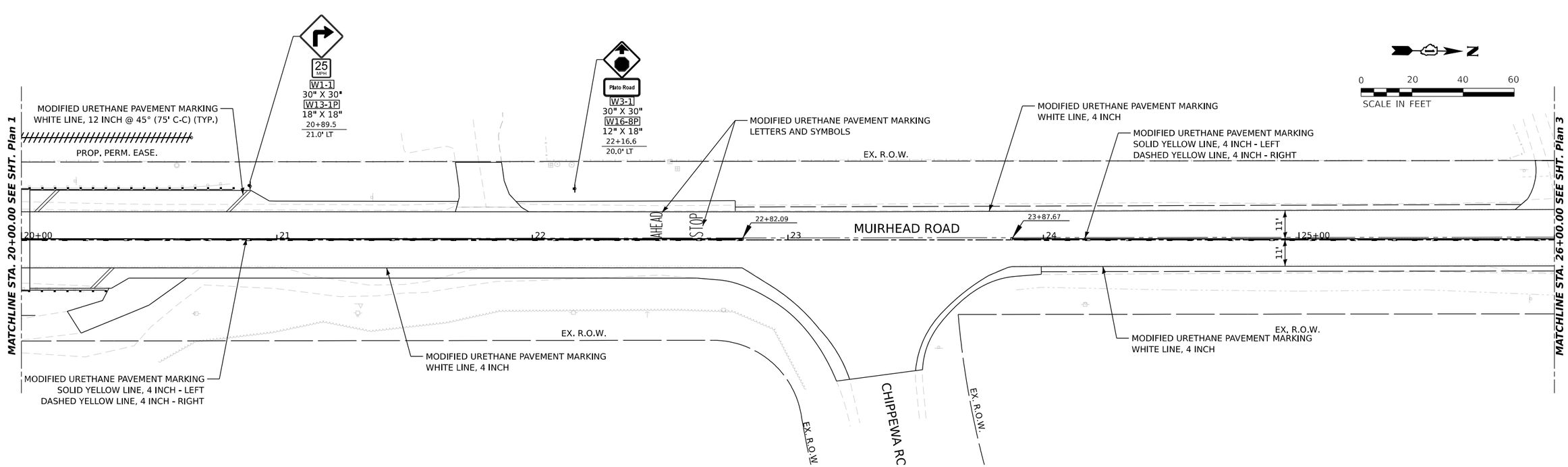

MODEL: P_MUIRHEAD - Plan 1 [Sheet]
FILE NAME: P:\2022\220616\Cad\02 Design\CADD_Sheets\220616-sht-pmk.dgn

HAMPTON, LENZINI AND RENWICK, INC. 1707 N RANDALL ROAD, SUITE 100 ELGIN, ILLINOIS 60123 ILLINOIS PROFESSIONAL DESIGN FIRM LS / PE / SE CORP. 184.000959	USER NAME = ajungermann	DESIGNED -	REVISED -	PLATO TOWNSHIP ROAD DISTRICT
		DRAWN -	REVISED -	
	PLOT SCALE = 0.16666667 ' / in.	CHECKED -	REVISED -	
	PLOT DATE = 3/18/2025	DATE -	REVISED -	

MUIRHEAD ROAD OVER CHICAGO, CENTRAL AND PACIFIC RAILROAD
PAVEMENT MARKING PLANS

SCALE: 1"=20' | SHEET 1 OF 3 SHEETS | STA. | TO STA.

F.A. RTE.	SECTION	COUNTY	TOTAL SHEETS	SHEET NO.
	17-12082-01-BR	KANE	88	29
		CONTRACT NO. 61K26		
	ILLINOIS	FED. AID PROJECT		

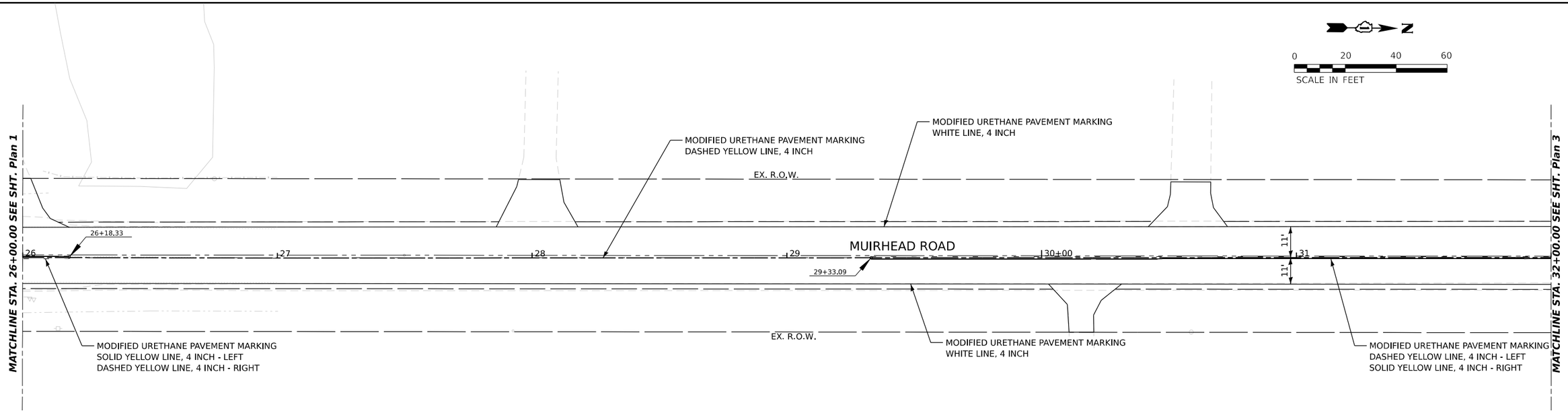

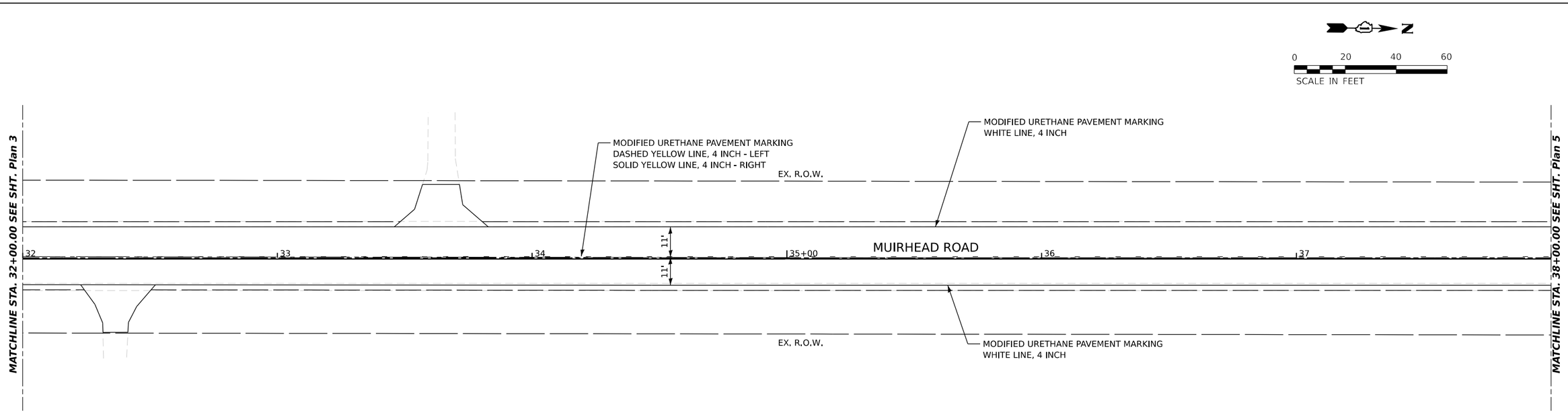

MODEL: P_MUIRHEAD - Plan 3 [Sheet]
FILE NAME: P:\2022\220616\Cadd02 Design\CADD Sheets\220616-sht-pmk.dgn

HAMPTON, LENZINI AND RENWICK, INC. 1707 N RANDALL ROAD, SUITE 100 ELGIN, ILLINOIS 60123 ILLINOIS PROFESSIONAL DESIGN FIRM LS / PE / SE CORP. 184.000959	USER NAME = ajungermann	DESIGNED -	REVISED -	PLATO TOWNSHIP ROAD DISTRICT	MUIRHEAD ROAD OVER CHICAGO, CENTRAL AND PACIFIC RAILROAD PAVEMENT MARKING PLANS
		DRAWN -	REVISED -		
	PLOT SCALE = 0.16666667 ' / in.	CHECKED -	REVISED -		
	PLOT DATE = 3/18/2025	DATE -	REVISED -		SCALE: 1"=20' SHEET 2 OF 3 SHEETS STA. TO STA.

F.A. RTE.	SECTION	COUNTY	TOTAL SHEETS	SHEET NO.
	17-12082-01-BR	KANE	88	30
		CONTRACT NO. 61K26		
	ILLINOIS	FED. AID PROJECT		

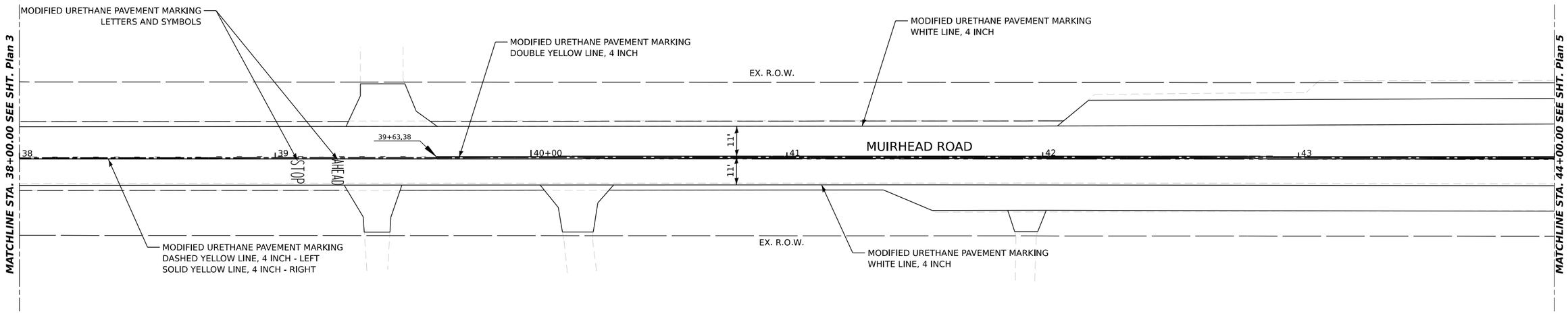

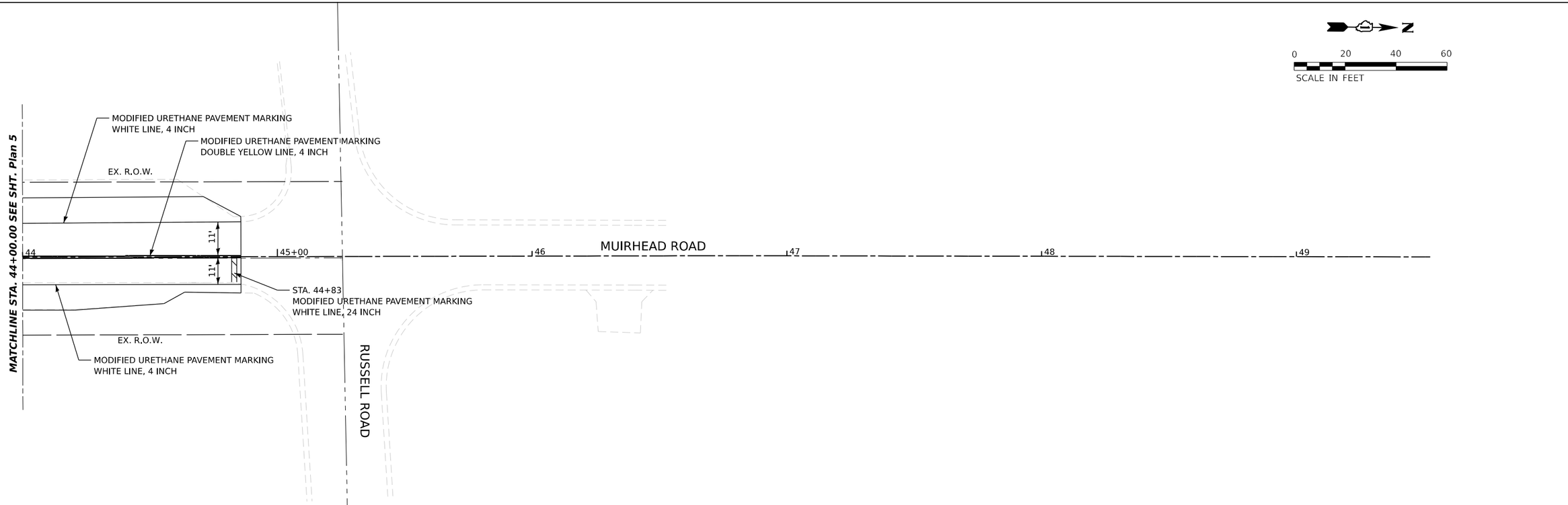

MODEL: P_MUIRHEAD - Plan 5 [Sheet]
FILE NAME: P:\2022\220616\Cad\02 Design\CADD Sheets\220616-sht-pmk.dgn

HAMPTON, LENZINI AND RENWICK, INC.
1707 N RANDALL ROAD, SUITE 100
ELGIN, ILLINOIS 60123
ILLINOIS PROFESSIONAL DESIGN FIRM
LS / PE / SE CORP. 184.000959

USER NAME = ajungermann	DESIGNED -	REVISED -	
	DRAWN -	REVISED -	
PLOT SCALE = 0.16666667 ' / in.	CHECKED -	REVISED -	
PLOT DATE = 3/18/2025	DATE -	REVISED -	

PLATO TOWNSHIP
ROAD DISTRICT

MUIRHEAD ROAD OVER CHICAGO, CENTRAL AND PACIFIC RAILROAD
PAVEMENT MARKING PLANS

SCALE: 1"=20' | SHEET 3 OF 3 SHEETS | STA. TO STA.

F.A. RTE.	SECTION	COUNTY	TOTAL SHEETS	SHEET NO.
	17-12082-01-BR	KANE	88	31
	CONTRACT NO. 61K26			
	ILLINOIS	FED. AID PROJECT		

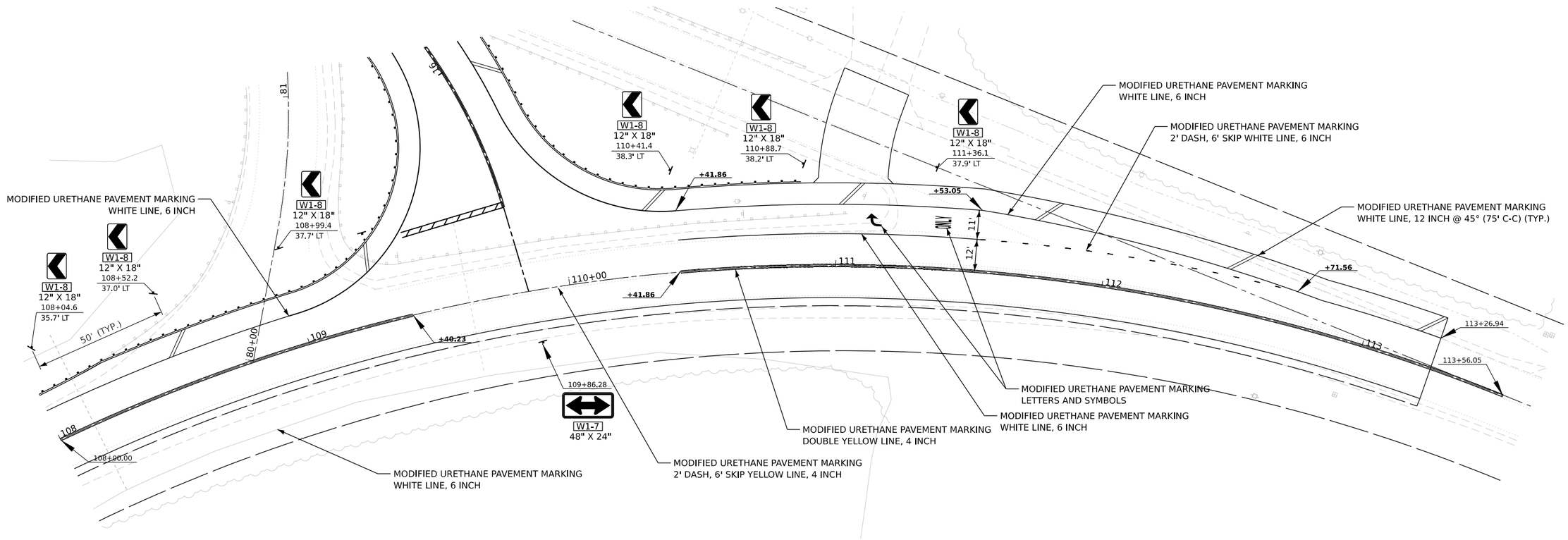

0 20 40 60
SCALE IN FEET

MODEL: E_PLATO • Plan 7 [Sheet]
FILE NAME: P:\2022\220616\Cad\02 Design\CADD_Sheets\220616-lt-pmk.dgn

HAMPTON, LENZINI AND RENWICK, INC. 1707 N RANDALL ROAD, SUITE 100 ELGIN, ILLINOIS 60123 ILLINOIS PROFESSIONAL DESIGN FIRM LS / PE / SE CORP. 184.000959	USER NAME = ajungermann	DESIGNED -	REVISED -	PLATO TOWNSHIP ROAD DISTRICT	MUIRHEAD ROAD OVER CHICAGO CENTRAL AND PACIFIC RAILROAD PAVEMENT MARKING PLANS	F.A. RTE.	SECTION	COUNTY	TOTAL SHEETS / SHEET NO.
		DRAWN -	REVISED -				17-12082-01-BR	KANE	88 / 32
	PLOT SCALE = 0.16666633 ' / in.	CHECKED -	REVISED -					CONTRACT NO. 61K26	
	PLOT DATE = 3/18/2025	DATE -	REVISED -		SCALE: SHEET OF SHEETS STA. TO STA.		ILLINOIS	FED. AID PROJECT	

BENCHMARK: Cross notch in "□" on northeast wingwall. Station 19+30.52, 21.45' Rt., Elev. 925.77.

EXISTING STRUCTURE NO. 043-3132 built in 1988 as C.H. 17, Sec. 87-00082-00-BR. Existing structure consists of five precast prestressed concrete deck beam spans. Beams are supported on stub abutments on metal shell piles, pile bent caps supported by concrete piles, and multiple column piers supported on spread footings. The back to back of abutments length is 202'-2⅜" and the out to out bridge deck width is 42'-0". Superstructure to be removed and replaced with reinforced concrete deck slab and rolled steel beams. Abutments and Piers 1 and 4 to be removed and replaced. Traffic to be maintained utilizing road closure and detour route.

Salvage: None.

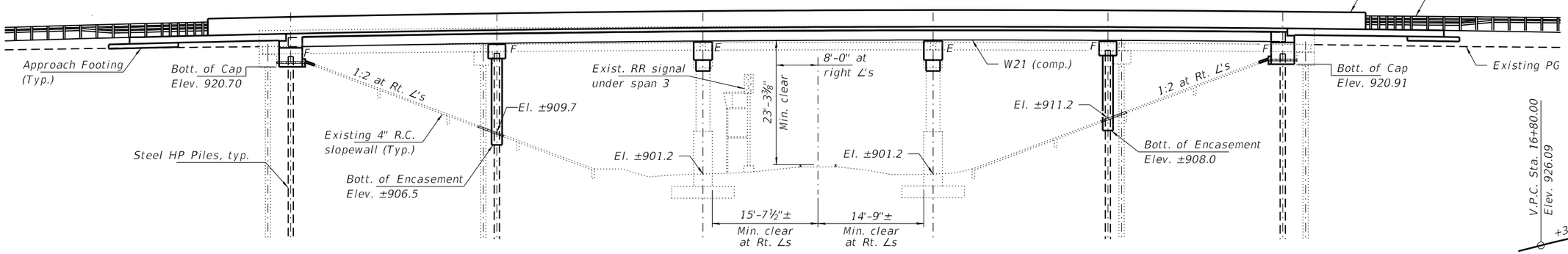

= Slopewall Removal

ELEVATION

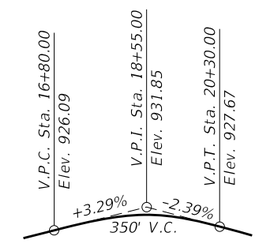

PROFILE GRADE

(Along ℄ Muirhead Road)

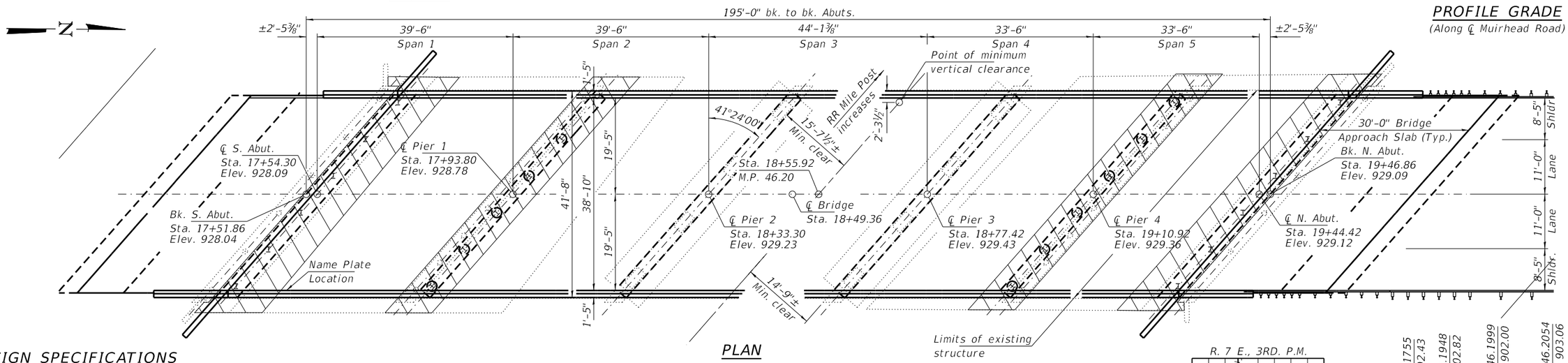

PLAN

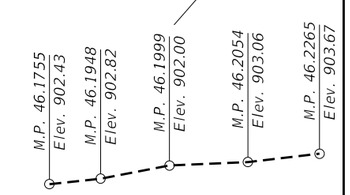

PROFILE GRADE

(℄ Railroad)

DESIGN SPECIFICATIONS

2020 AASHTO LRFD Bridge Design Specifications, 9th Edition

LOADING HL-93

Allow 50#/sq. ft. for future wearing surface.

LOADING HS20-44

Existing Conditions - Substructure.

DESIGN STRESSES

NEW CONSTRUCTION

f'c = 4,000 psi (Superstructure)
f'c = 3,500 psi (Substructure)
fy = 60,000 psi (Reinf.)
fy = 50,000 (M270 Grade 50W)

EXISTING CONSTRUCTION

fc = 1,400 psi (Substructure)
fs = 20,000 psi (Reinf.)

SEISMIC DATA

Seismic Performance Zone (SPZ) = 1
Design Spectral Acceleration at 1.0 sec. (S_{D1}) = 0.124g
Design Spectral Acceleration at 0.2 sec. (S_{DS}) = 0.238g
Soil Site Class = E

I certify that to the best of my knowledge, information and belief, this bridge design is structurally adequate for the design loading shown on the plans. The design is an economical one for the style of structure and complies with requirements of the current "AASHTO LRFD Specifications."

LICENSED STRUCTURAL ENGINEER IAN P. NILAUSEN 081-008439 STATE OF ILLINOIS

1/18/2024
ILLINOIS STRUCTURAL NO. 081-008439 Expires 11-30-2024

INDEX OF SHEETS

1. General Plan & Elevation
2. General Details
3-6. Top of Slab Elevations
7. Top of South Approach Slab Elevations
8. Top of North Approach Slab Elevations
9. Superstructure
10. Superstructure Details
11. Diaphragm Details
12-13. Bridge Approach Slab Details
14. Structural Steel
15-16. Structural Steel Details
17. Bearing Details
18. South Abutment
19. North Abutment
20. Pier 1
21. Pier 2
22. Pier 3
23. Pier 4
24. HP Pile Details
25. Existing Borings
26-35. Existing Structure Plans

CN R.R.
RE-BUILT 202_ BY
ELGIN ROAD DISTRICT
KANE COUNTY
SEC. 17-12082-01-BR
LOADING HL-93
STR. NO. 045-9132

NAME PLATE

See Std. 515001

Existing name plate shall be cleaned and relocated next to new name plate. Cost included with Name Plates (Special).

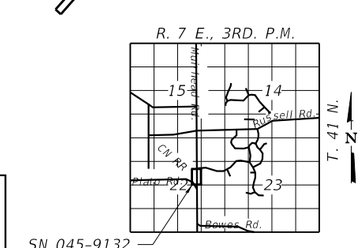

LOCATION SKETCH

GENERAL PLAN & ELEVATION
MUIRHEAD ROAD (T.R. 2110)
OVER CANADIAN NATIONAL RR
SECTION 17-12082-01-BR
KANE COUNTY
STATION 18+49.36
STRUCTURE NO. 045-9132

FILE NAME = P:\2022\220616\Cad\02 Design\CADD_Sheets\220616-sht-bridge.dgn	DESIGNED - I.P.N.	REVISED -	
HAMPTON, LENZINI AND RENWICK, INC. 3085 STEVENSON DRIVE, SUITE 201 SPRINGFIELD, ILLINOIS 62703 ILLINOIS PROFESSIONAL DESIGN FIRM LS / PE / SE CORP. 184.000959	USER NAME = Inilausen	CHECKED - S.T.M.	REVISED -
	PLOT SCALE =	DRAWN - I.P.N.	REVISED -
	PLOT DATE = 1/18/2024	CHECKED - S.T.M.	REVISED -

STATE OF ILLINOIS
DEPARTMENT OF TRANSPORTATION

GENERAL PLAN & ELEVATION
STRUCTURE NO. 045-9132

SHEET NO. 1 OF 35 SHEETS

T.R.	SECTION	COUNTY	TOTAL SHEETS	SHEET NO.
2110	17-12082-01-BR	KANE	84	33
MUIRHEAD ROAD / CNNN R.R.		CONTRACT NO. 61K26		
		ILLINOIS	FED. AID PROJECT NO. ZU0Q(831)	

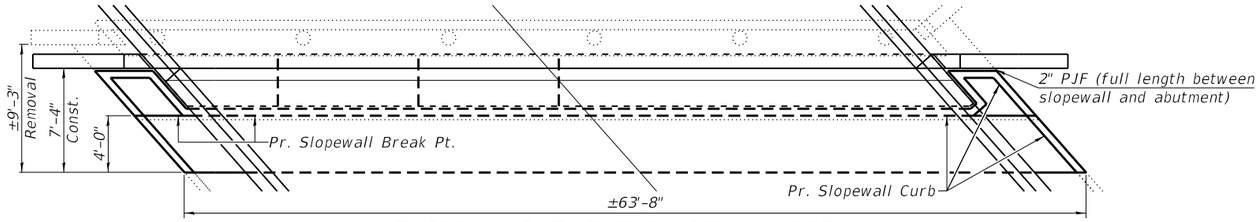

TYPICAL ABUTMENT SLOPEWALL DETAILS

(South Abutment shown, North Abutment similar)
Slopewall Removal hatching not shown for clarity.

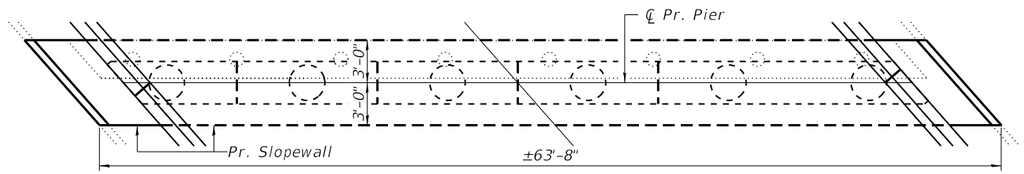

TYPICAL PIER SLOPEWALL DETAILS

(Pier 1 shown, Pier 4 similar)
Slopewall Removal hatching not shown for clarity.

GENERAL NOTES

Fasteners shall be ASTM F 3125 Grade A325 Type 1, mechanically galvanized bolts in painted or coated metallized areas. Fasteners shall be ASTM F 3125 Grade A325 Type 1, hot-dipped galvanized in uncoated areas. Fasteners shall be ASTM F3125 Grade A325 Type 3 weathering steel bolts in unpainted areas. Bolts 7/8 in. diameter, holes 15/16 in. diameter, unless otherwise noted.

Calculated weight of Structural Steel = 184,670 lbs.

All structural steel shall be AASHTO M270 Grade 50W.

No field welding is permitted except as specified in the contract documents.

Reinforcement bars designated (E) shall be epoxy coated.

The finishing machine rails shall be placed on the top of the top flange of the exterior beams within the deck pour. Beam blocks shall be placed between beams at all tie locations in each bay for the full width of the deck pour.

Slipforming of the parapets is not allowed.

Bearing seat surfaces shall be constructed or adjusted to the designated elevations within a tolerance of 1/8 in. (0.01 ft.). Adjustment shall be made either by grinding the surface or by shimming the bearings.

Plan dimensions and details relative to the existing structure have been taken from existing plans are subject to nominal construction variations. The Contactor shall field verify existing dimensions and details affecting new construction and make necessary approved adjustments prior to construction or ordering of materials. Such variations shall not be cause for additional compensation for a change in scope of the work, however, the Contractor will be paid for the quantity actually furnished at the unit price bid for the work.

Structural steel shall be painted for a distance equal to the depth of the embedment into the concrete cap plus 18 in. Painted areas shall be primed in the shop with a Department-approved zinc rich primer. Field painting will not be required.

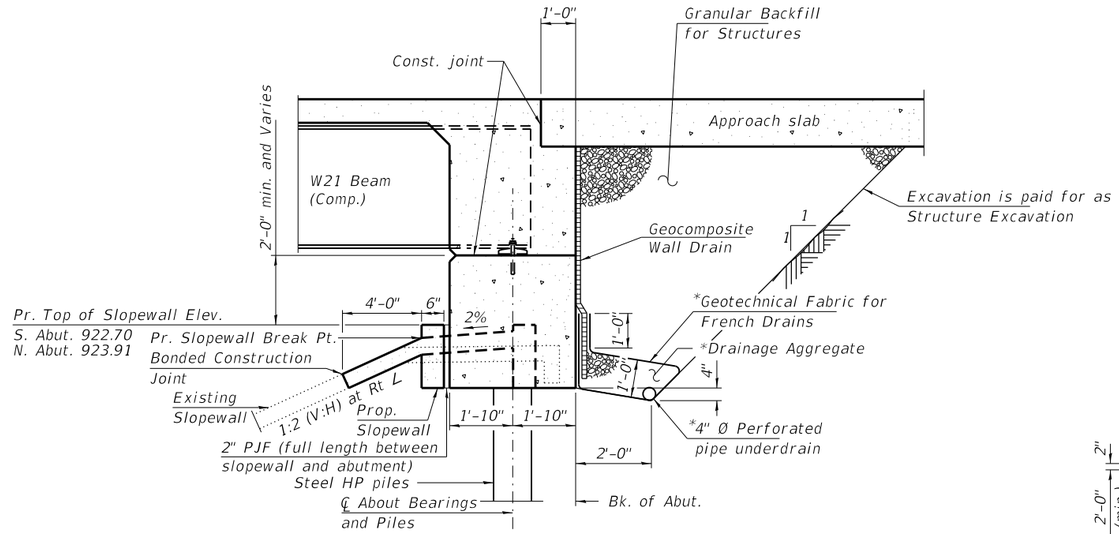

SECTION THRU INTEGRAL ABUTMENT

(Horiz. dim. at Rt. ∠'s)

Note:
All drainage system components shall extend to 2'-0" from the end of each wingwall except an outlet pipe shall extend until intersecting with the side slopes. The pipes shall drain into concrete headwalls (See Article 601.05 of the Standard Specifications and Highway Standard 601101).

*Included in the cost of Pipe Underdrains for Structures (See Special Provisions).

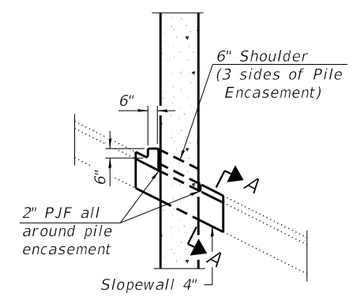

SECTION THRU CONCRETE SLOPEWALL AT PIER

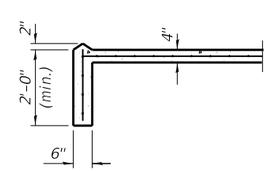

SECTION A-A

Slope wall shall be reinforced with welded wire fabric, 6 in. x 6 in. - W4.0 x W4.0, weighing 58 lbs. per 100 sq. ft.

TOTAL BILL OF MATERIAL

ITEM	UNIT	SUPER	SUB	OTHER	TOTAL
Removal of Existing Structures	Each	1			1
Concrete Removal	Cu. Yd.		41.5		41.5
Slope Wall Removal	Sq. Yd.			207	207
Structure Excavation	Cu. Yd.		20		20
Concrete Structures	Cu. Yd.		185.8		185.8
Concrete Superstructure	Cu. Yd.	274.6			274.6
Bridge Deck Grooving	Sq. Yd.	1,088			1,088
Concrete Encasement	Cu. Yd.		33.4		33.4
Protective Coat	Sq. Yd.	1,305	21		1,326
Concrete Superstructure (Approach Slab)	Cu. Yd.	113.6			113.6
Furnishing and Erecting Structural Steel	L. Sum	1			1
Stud Shear Connectors	Each	8,328			8,328
Reinforcement Bars, Epoxy Coated	Pound	129,320	34,860		164,180
Slope Wall 4"	Sq. Yd.			153	153
Furnishing Steel Piles HP14x89	Foot		995		995
Driving Piles	Foot		995		995
Test Pile Steel HP14x89	Each		4		4
Elastomeric Bearing Assembly, Type I	Each	12			12
Anchor Bolts, 3/4"	Each	24			24
Anchor Bolts, 1"	Each	48			48
Granular Backfill for Structures	Cu. Yd.		218		218
Geocomposite Wall Drain	Sq. Yd.		109		109
Pipe Underdrains for Structures 4"	Foot		203		203
Structural Repair of Concrete (Depth Equal to or Less Than 5")	Sq. Ft.		40		40
Name Plates (Special)	Each	1			1

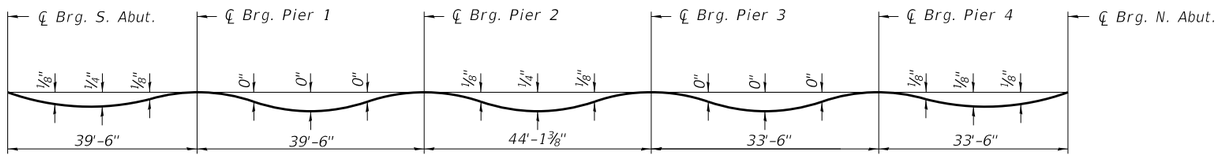

DEAD LOAD DEFLECTION DIAGRAM

(Includes weight of concrete only.)

Note:
The above deflections are not to be used in the field if the engineer is working from the grade elevations adjusted for dead load deflections as shown below.

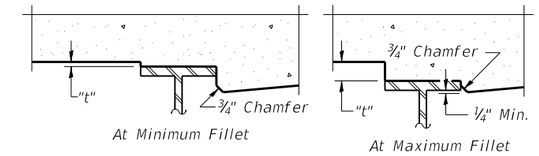

To determine "t": After all structural steel has been erected, elevations of the top flanges of the beams shall be taken at intervals shown below. These elevations subtracted from the "Theoretical Grade Elevations Adjusted for Dead Load Deflection" shown below, minus slab thickness, equals the fillet heights "t" above top flange of beams.

FILLET HEIGHTS

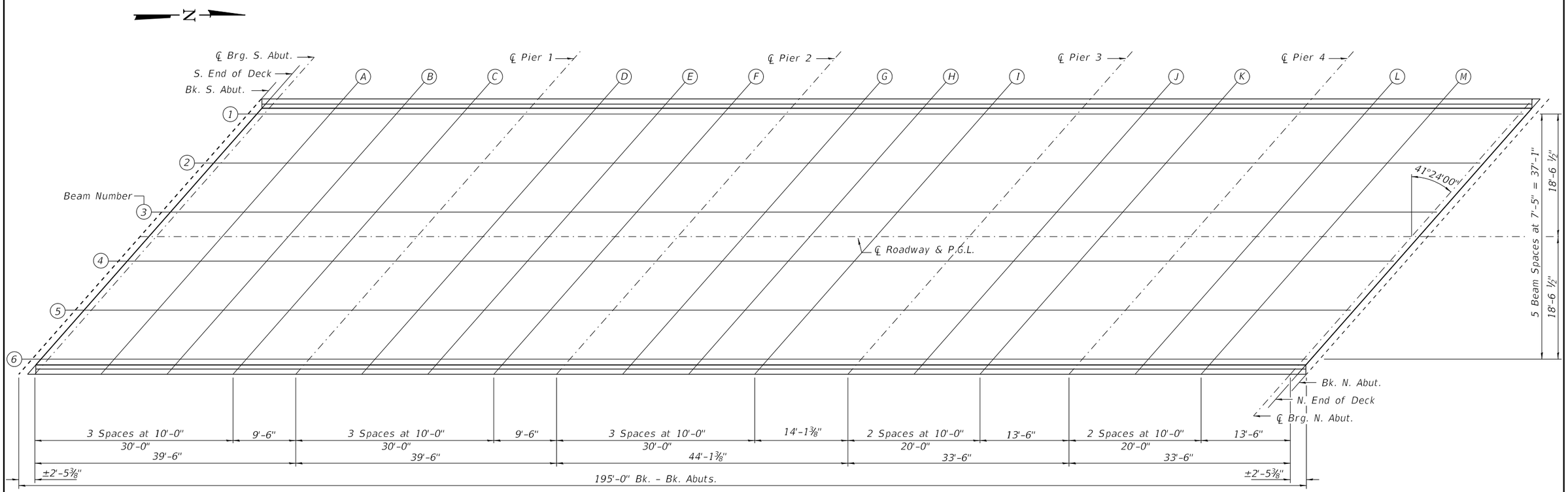

PLAN

E-S 2-17-2017

FILE NAME = P:\2022\220616\Cad\02 Design\CADD_Sheets\220616-sht-bridge.dgn	DESIGNED - I.P.N.	REVISED -	STATE OF ILLINOIS DEPARTMENT OF TRANSPORTATION	TOP OF SLAB ELEVATIONS STRUCTURE NO. 045-9132	T.R.	SECTION	COUNTY	TOTAL SHEETS / SHEET NO.
HAMPTON, LENZINI AND RENWICK, INC. 5395 STEVENSON DRIVE, SUITE 201 SPRINGFIELD, ILLINOIS 62703 ILLINOIS PROFESSIONAL DESIGN FIRM LS / PE / SE CORP. 184.000959	USER NAME = Inllausen	CHECKED - S.T.M.			2110	17-12082-01-BR	KANE	84 / 35
	PLOT SCALE =	DRAWN - I.P.N.		SHEET NO. 3 OF 35 SHEETS	MUIRHEAD ROAD / CNNN R.R.		CONTRACT NO. 61K26	
	PLOT DATE = 1/18/2024	CHECKED - S.T.M.			ILLINOIS	FED. AID PROJECT NO. ZU0Q(831)		

LT. FACE OF BARRIER

Location	Station	Offset	Theoretical Grade Elevations	Theoretical Grade Elevations Adjusted for Dead Load Deflection
Bk S Abut	17+68.98	-19.42'	928.08	928.08
S End Deck	17+70.31	-19.42'	928.11	928.11
℄ Brg S Abut	17+71.42	-19.42'	928.13	928.13
A	17+81.42	-19.42'	928.30	928.32
B	17+91.42	-19.42'	928.46	928.48
C	18+01.42	-19.42'	928.60	928.61
℄ Pier 1	18+10.92	-19.42'	928.72	928.72
D	18+20.92	-19.42'	928.83	928.83
E	18+30.92	-19.42'	928.92	928.92
F	18+40.92	-19.42'	928.99	928.99
℄ Pier 2	18+50.42	-19.42'	929.05	929.05
G	18+60.42	-19.42'	929.10	929.11
H	18+70.42	-19.42'	929.12	929.14
I	18+80.42	-19.42'	929.14	929.15
℄ Pier 3	18+94.53	-19.42'	929.13	929.13
J	19+04.53	-19.42'	929.10	929.10
K	19+14.53	-19.42'	929.05	929.05
℄ Pier 4	19+28.03	-19.42'	928.97	928.97
L	19+38.03	-19.42'	928.89	928.90
M	19+48.03	-19.42'	928.79	928.80
℄ Brg N Abut	19+61.53	-19.42'	928.63	928.63
N End Deck	19+62.64	-19.42'	928.62	928.62
Bk N Abut	19+63.98	-19.42'	928.60	928.60

BEAM 1

Location	Station	Offset	Theoretical Grade Elevations	Theoretical Grade Elevations Adjusted for Dead Load Deflection
Bk S Abut	17+68.20	-18.54'	928.08	928.08
S End Deck	17+69.54	-18.54'	928.11	928.11
℄ Brg S Abut	17+70.65	-18.54'	928.13	928.13
A	17+80.65	-18.54'	928.30	928.32
B	17+90.65	-18.54'	928.46	928.48
C	18+00.65	-18.54'	928.60	928.61
℄ Pier 1	18+10.15	-18.54'	928.72	928.72
D	18+20.15	-18.54'	928.83	928.83
E	18+30.15	-18.54'	928.92	928.93
F	18+40.15	-18.54'	929.00	929.00
℄ Pier 2	18+49.65	-18.54'	929.06	929.06
G	18+59.65	-18.54'	929.11	929.12
H	18+69.65	-18.54'	929.14	929.15
I	18+79.65	-18.54'	929.15	929.16
℄ Pier 3	18+93.76	-18.54'	929.14	929.14
J	19+03.76	-18.54'	929.11	929.11
K	19+13.76	-18.54'	929.07	929.07
℄ Pier 4	19+27.26	-18.54'	928.99	928.99
L	19+37.26	-18.54'	928.91	928.92
M	19+47.26	-18.54'	928.81	928.82
℄ Brg N Abut	19+60.76	-18.54'	928.66	928.66
N End Deck	19+61.87	-18.54'	928.64	928.64
Bk N Abut	19+63.21	-18.54'	928.63	928.63

BEAM 2

Location	Station	Offset	Theoretical Grade Elevations	Theoretical Grade Elevations Adjusted for Dead Load Deflection
Bk S Abut	17+61.67	-11.13'	928.07	928.07
S End Deck	17+63.00	-11.13'	928.10	928.10
℄ Brg S Abut	17+64.11	-11.13'	928.12	928.12
A	17+74.11	-11.13'	928.30	928.32
B	17+84.11	-11.13'	928.47	928.49
C	17+94.11	-11.13'	928.62	928.63
℄ Pier 1	18+03.61	-11.13'	928.75	928.75
D	18+13.61	-11.13'	928.87	928.87
E	18+23.61	-11.13'	928.98	928.98
F	18+33.61	-11.13'	929.06	929.06
℄ Pier 2	18+43.11	-11.13'	929.13	929.13
G	18+53.11	-11.13'	929.19	929.20
H	18+63.11	-11.13'	929.23	929.25
I	18+73.11	-11.13'	929.25	929.27
℄ Pier 3	18+87.22	-11.13'	929.26	929.26
J	18+97.22	-11.13'	929.24	929.24
K	19+07.22	-11.13'	929.21	929.21
℄ Pier 4	19+20.72	-11.13'	929.14	929.14
L	19+30.72	-11.13'	929.07	929.08
M	19+40.72	-11.13'	928.99	929.00
℄ Brg N Abut	19+54.22	-11.13'	928.85	928.85
N End Deck	19+55.33	-11.13'	928.83	928.83
Bk N Abut	19+56.67	-11.13'	928.82	928.82

E-S 2-17-2017

BEAM 3

Location	Station	Offset	Theoretical Grade Elevations	Theoretical Grade Elevations Adjusted for Dead Load Deflection
Bk S Abut	17+55.13	-3.71'	928.05	928.05
S End Deck	17+56.46	-3.71'	928.08	928.08
℄ Brg S Abut	17+57.57	-3.71'	928.10	928.10
A	17+67.57	-3.71'	928.29	928.31
B	17+77.57	-3.71'	928.47	928.49
C	17+87.57	-3.71'	928.64	928.65
℄ Pier 1	17+97.07	-3.71'	928.78	928.78
D	18+07.07	-3.71'	928.91	928.91
E	18+17.07	-3.71'	929.02	929.02
F	18+27.07	-3.71'	929.12	929.12
℄ Pier 2	18+36.57	-3.71'	929.20	929.20
G	18+46.57	-3.71'	929.27	929.28
H	18+56.57	-3.71'	929.32	929.33
I	18+66.57	-3.71'	929.35	929.36
℄ Pier 3	18+80.68	-3.71'	929.37	929.37
J	18+90.68	-3.71'	929.37	929.37
K	19+00.68	-3.71'	929.35	929.35
℄ Pier 4	19+14.18	-3.71'	929.29	929.29
L	19+24.18	-3.71'	929.23	929.24
M	19+34.18	-3.71'	929.16	929.17
℄ Brg N Abut	19+47.68	-3.71'	929.03	929.03
N End Deck	19+48.80	-3.71'	929.02	929.02
Bk N Abut	19+50.13	-3.71'	929.00	929.00

℄ STRUCTURE, ROADWAY & P.G.L.

Location	Station	Offset	Theoretical Grade Elevations	Theoretical Grade Elevations Adjusted for Dead Load Deflection
Bk S Abut	17+51.86	0.00'	928.04	928.04
S End Deck	17+53.19	0.00'	928.06	928.06
℄ Brg S Abut	17+54.30	0.00'	928.09	928.09
A	17+64.30	0.00'	928.29	928.30
B	17+74.30	0.00'	928.47	928.49
C	17+84.30	0.00'	928.64	928.65
℄ Pier 1	17+93.80	0.00'	928.78	928.78
D	18+03.80	0.00'	928.92	928.92
E	18+13.80	0.00'	929.04	929.04
F	18+23.80	0.00'	929.15	929.15
℄ Pier 2	18+33.30	0.00'	929.23	929.23
G	18+43.30	0.00'	929.30	929.31
H	18+53.30	0.00'	929.36	929.37
I	18+63.30	0.00'	929.40	929.41
℄ Pier 3	18+77.42	0.00'	929.43	929.43
J	18+87.42	0.00'	929.43	929.42
K	18+97.42	0.00'	929.41	929.41
℄ Pier 4	19+10.92	0.00'	929.36	929.36
L	19+20.92	0.00'	929.31	929.32
M	19+30.92	0.00'	929.24	929.25
℄ Brg N Abut	19+44.42	0.00'	929.12	929.12
N End Deck	19+45.53	0.00'	929.11	929.11
Bk N Abut	19+46.86	0.00'	929.09	929.09

BEAM 4

Location	Station	Offset	Theoretical Grade Elevations	Theoretical Grade Elevations Adjusted for Dead Load Deflection
Bk S Abut	17+48.59	3.71'	927.91	927.91
S End Deck	17+49.92	3.71'	927.94	927.94
℄ Brg S Abut	17+51.03	3.71'	927.96	927.96
A	17+61.03	3.71'	928.17	928.18
B	17+71.03	3.71'	928.36	928.38
C	17+81.03	3.71'	928.53	928.54
℄ Pier 1	17+90.53	3.71'	928.68	928.68
D	18+00.53	3.71'	928.82	928.82
E	18+10.53	3.71'	928.95	928.95
F	18+20.53	3.71'	929.06	929.06
℄ Pier 2	18+30.03	3.71'	929.06	929.06
G	18+40.03	3.71'	929.15	929.15
H	18+50.03	3.71'	929.22	929.23
I	18+60.03	3.71'	929.28	929.30
℄ Pier 3	18+74.15	3.71'	929.33	929.34
J	18+84.15	3.71'	929.37	929.37
K	18+94.15	3.71'	929.37	929.37
℄ Pier 4	19+07.65	3.71'	929.37	929.37
L	19+17.65	3.71'	929.36	929.36
M	19+27.65	3.71'	929.32	929.32
℄ Brg N Abut	19+41.15	3.71'	929.27	929.28
N End Deck	19+42.26	3.71'	929.21	929.22
Bk N Abut	19+43.59	3.71'	929.10	929.10

E-S 2-17-2017

BEAM 5

Location	Station	Offset	Theoretical Grade Elevations	Theoretical Grade Elevations Adjusted for Dead Load Deflection
Bk S Abut	17+42.05	11.13'	927.65	927.65
S End Deck	17+43.38	11.13'	927.68	927.68
℄ Brg S Abut	17+44.49	11.13'	927.71	927.71
A	17+54.49	11.13'	927.92	927.94
B	17+64.49	11.13'	928.12	928.14
C	17+74.49	11.13'	928.31	928.32
℄ Pier 1	17+83.99	11.13'	928.47	928.47
D	17+93.99	11.13'	928.62	928.62
E	18+03.99	11.13'	928.76	928.76
F	18+13.99	11.13'	928.88	928.88
℄ Pier 2	18+23.49	11.13'	928.98	928.98
G	18+33.49	11.13'	929.06	929.07
H	18+43.49	11.13'	929.14	929.15
I	18+53.49	11.13'	929.19	929.21
℄ Pier 3	18+67.61	11.13'	929.24	929.24
J	18+77.61	11.13'	929.26	929.26
K	18+87.61	11.13'	929.26	929.26
℄ Pier 4	19+01.11	11.13'	929.23	929.23
L	19+11.11	11.13'	929.20	929.20
M	19+21.11	11.13'	929.14	929.15
℄ Brg N Abut	19+34.61	11.13'	929.04	929.04
N End Deck	19+35.72	11.13'	929.03	929.03
Bk N Abut	19+37.05	11.13'	929.02	929.02

BEAM 6

Location	Station	Offset	Theoretical Grade Elevations	Theoretical Grade Elevations Adjusted for Dead Load Deflection
Bk S Abut	17+35.51	18.54'	927.39	927.39
S End Deck	17+36.84	18.54'	927.42	927.42
℄ Brg S Abut	17+37.95	18.54'	927.45	927.45
A	17+47.95	18.54'	927.67	927.69
B	17+57.95	18.54'	927.88	927.90
C	17+67.95	18.54'	928.08	928.09
℄ Pier 1	17+77.45	18.54'	928.25	928.25
D	17+87.45	18.54'	928.41	928.41
E	17+97.45	18.54'	928.56	928.56
F	18+07.45	18.54'	928.69	928.69
℄ Pier 2	18+16.95	18.54'	928.80	928.80
G	18+26.95	18.54'	928.90	928.91
H	18+36.95	18.54'	928.98	929.00
I	18+46.95	18.54'	929.05	929.06
℄ Pier 3	18+61.07	18.54'	929.11	929.11
J	18+71.07	18.54'	929.14	929.14
K	18+81.07	18.54'	929.15	929.15
℄ Pier 4	18+94.57	18.54'	929.14	929.14
L	19+04.57	18.54'	929.11	929.12
M	19+14.57	18.54'	929.07	929.08
℄ Brg N Abut	19+28.07	18.54'	928.98	928.98
N End Deck	19+29.18	18.54'	928.98	928.98
Bk N Abut	19+30.51	18.54'	928.97	928.97

RT. FACE OF BARRIER

Location	Station	Offset	Theoretical Grade Elevations	Theoretical Grade Elevations Adjusted for Dead Load Deflection
Bk S Abut	17+34.74	19.42'	927.36	927.36
S End Deck	17+36.07	19.42'	927.39	927.39
℄ Brg S Abut	17+37.18	19.42'	927.42	927.42
A	17+47.18	19.42'	927.64	927.66
B	17+57.18	19.42'	927.86	927.87
C	17+67.18	19.42'	928.05	928.06
℄ Pier 1	17+76.68	19.42'	928.22	928.22
D	17+86.68	19.42'	928.39	928.39
E	17+96.68	19.42'	928.53	928.54
F	18+06.68	19.42'	928.67	928.67
℄ Pier 2	18+16.18	19.42'	928.78	928.78
G	18+26.18	19.42'	928.88	928.89
H	18+36.18	19.42'	928.96	928.98
I	18+46.18	19.42'	929.03	929.04
℄ Pier 3	18+60.30	19.42'	929.10	929.10
J	18+70.30	19.42'	929.12	929.12
K	18+80.30	19.42'	929.14	929.14
℄ Pier 4	18+93.80	19.42'	929.13	929.13
L	19+03.80	19.42'	929.10	929.11
M	19+13.80	19.42'	929.06	929.07
℄ Brg N Abut	19+27.30	19.42'	928.98	928.98
N End Deck	19+28.41	19.42'	928.97	928.97
Bk N Abut	19+29.74	19.42'	928.96	928.96

E-S 2-17-2017

LT. FACE OF BARRIER

Location	Station	Offset	Theoretical Grade Elevations
S. End S. Appr. Slab	17+40.31	-19.42'	927.49
A	17+50.31	-19.42'	927.71
B	17+60.31	-19.42'	927.92
N. End S. Appr. Slab	17+70.31	-19.42'	928.11

LT. EDGE OF ROADWAY

Location	Station	Offset	Theoretical Grade Elevations
S. End S. Appr. Slab	17+32.89	-11.00'	927.44
A	17+42.89	-11.00'	927.67
B	17+52.89	-11.00'	927.89
N. End S. Appr. Slab	17+62.89	-11.00'	928.10

℄ STRUCTURE, ROADWAY & P.G.L.

Location	Station	Offset	Theoretical Grade Elevations
S. End S. Appr. Slab	17+23.19	0.00'	927.36
A	17+33.19	0.00'	927.61
B	17+43.19	0.00'	927.85
N. End S. Appr. Slab	17+53.19	0.00'	928.06

RT. EDGE OF ROADWAY

Location	Station	Offset	Theoretical Grade Elevations
S. End S. Appr. Slab	17+13.49	11.00'	926.94
A	17+23.49	11.00'	927.20
B	17+33.49	11.00'	927.45
N. End S. Appr. Slab	17+43.49	11.00'	927.69

RT. FACE OF BARRIER

Location	Station	Offset	Theoretical Grade Elevations
S. End S. Appr. Slab	17+06.07	19.42'	926.60
A	17+16.07	19.42'	926.88
B	17+26.07	19.42'	927.14
N. End S. Appr. Slab	17+36.07	19.42'	927.39

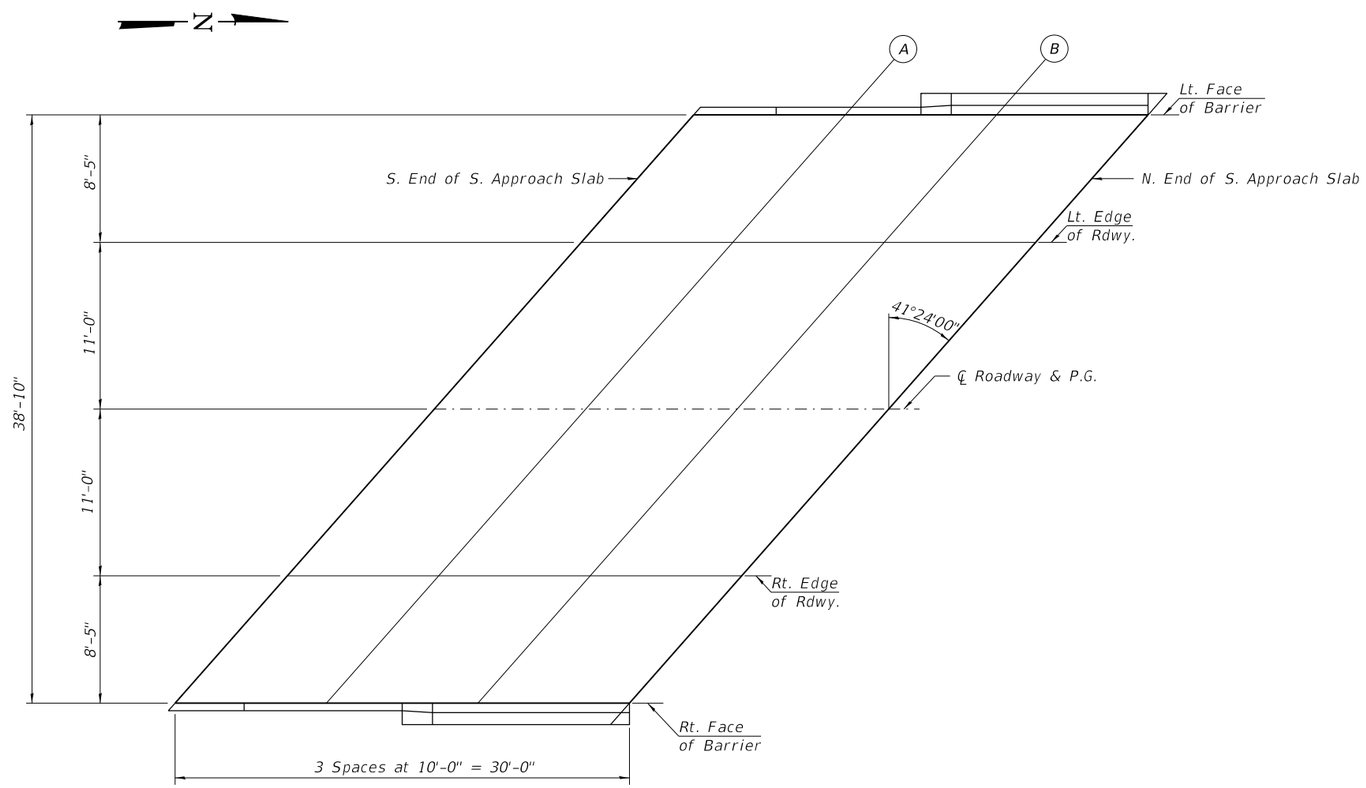

PLAN

FILE NAME = P:\2022\220616\Cad\02 Design\CADD_Sheets\220616-sht-bridge.dgn	DESIGNED - I.P.N.	REVISED -	STATE OF ILLINOIS DEPARTMENT OF TRANSPORTATION
HAMPTON, LENZINI AND RENWICK, INC. 3085 STEVENSON DRIVE, SUITE 201 SPRINGFIELD, ILLINOIS 62703 ILLINOIS PROFESSIONAL DESIGN FIRM LS / PE / SE CORP. 184.000959	USER NAME = lnilausen	CHECKED - S.T.M.	REVISED -
	PLOT SCALE =	DRAWN - I.P.N.	REVISED -
	PLOT DATE = 1/18/2024	CHECKED - S.T.M.	REVISED -

TOP OF S. APPROACH SLAB ELEVATIONS
STRUCTURE NO. 045-9132

SHEET NO. 7 OF 35 SHEETS

T.R.	SECTION	COUNTY	TOTAL SHEETS	SHEET NO.
2110	17-12082-01-BR	KANE	84	39
MUIRHEAD ROAD / CNNN R.R.		CONTRACT NO. 61K26		
		ILLINOIS	FED. AID PROJECT NO. ZU0Q(831)	

LT. FACE OF BARRIER

Location	Station	Offset	Theoretical Grade Elevations
S. End N. Appr. Slab	19+62.64	-19.42'	928.62
A	19+72.64	-19.42'	928.48
B	19+82.64	-19.42'	928.33
N. End N. Appr. Slab	19+92.64	-19.42'	928.16

LT. EDGE OF ROADWAY

Location	Station	Offset	Theoretical Grade Elevations
S. End N. Appr. Slab	19+55.22	-11.00'	928.84
A	19+65.22	-11.00'	928.71
B	19+75.22	-11.00'	928.57
N. End N. Appr. Slab	19+85.22	-11.00'	928.41

℄ STRUCTURE, ROADWAY & P.G.L.

Location	Station	Offset	Theoretical Grade Elevations
S. End N. Appr. Slab	19+45.53	0.00'	929.11
A	19+55.53	0.00'	929.00
B	19+65.53	0.00'	928.87
N. End N. Appr. Slab	19+75.53	0.00'	928.73

RT. EDGE OF ROADWAY

Location	Station	Offset	Theoretical Grade Elevations
S. End N. Appr. Slab	19+35.83	11.00'	929.03
A	19+45.83	11.00'	928.94
B	19+55.83	11.00'	928.83
N. End N. Appr. Slab	19+65.83	11.00'	928.70

RT. FACE OF BARRIER

Location	Station	Offset	Theoretical Grade Elevations
S. End N. Appr. Slab	19+28.41	19.42'	928.97
A	19+38.41	19.42'	928.89
B	19+48.41	19.42'	928.79
N. End N. Appr. Slab	19+58.41	19.42'	928.67

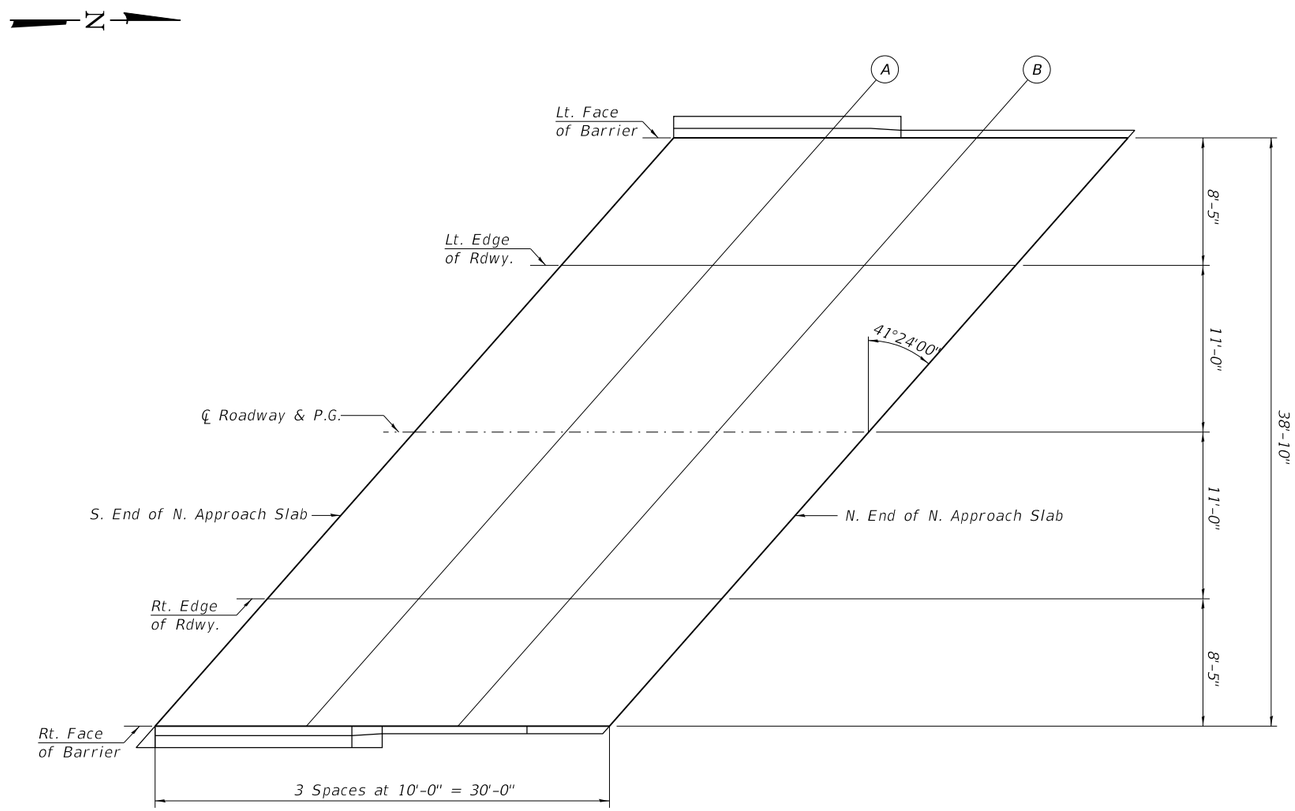

PLAN

FILE NAME = P:\2022\220616\Cad\02 Design\CADD_Sheets\220616-sht-bridge.dgn	DESIGNED - I.P.N.	REVISED -	
HAMPTON, LENZINI AND RENWICK, INC. 3085 STEVENSON DRIVE, SUITE 201 SPRINGFIELD, ILLINOIS 62703	USER NAME = Inlausen	CHECKED - S.T.M.	REVISED -
ILLINOIS PROFESSIONAL DESIGN FIRM LS / PE / SE CORP. 184.000959	PLOT SCALE =	DRAWN - I.P.N.	REVISED -
	PLOT DATE = 1/18/2024	CHECKED - S.T.M.	REVISED -

STATE OF ILLINOIS
DEPARTMENT OF TRANSPORTATION

TOP OF N. APPROACH SLAB ELEVATIONS
STRUCTURE NO. 045-9132

SHEET NO. 8 OF 35 SHEETS

T.R.	SECTION	COUNTY	TOTAL SHEETS	SHEET NO.
2110	17-12082-01-BR	KANE	84	40
MUIRHEAD ROAD / CNNN R.R.		CONTRACT NO. 61K26		
		ILLINOIS FED. AID PROJECT NO. ZU0Q(831)		

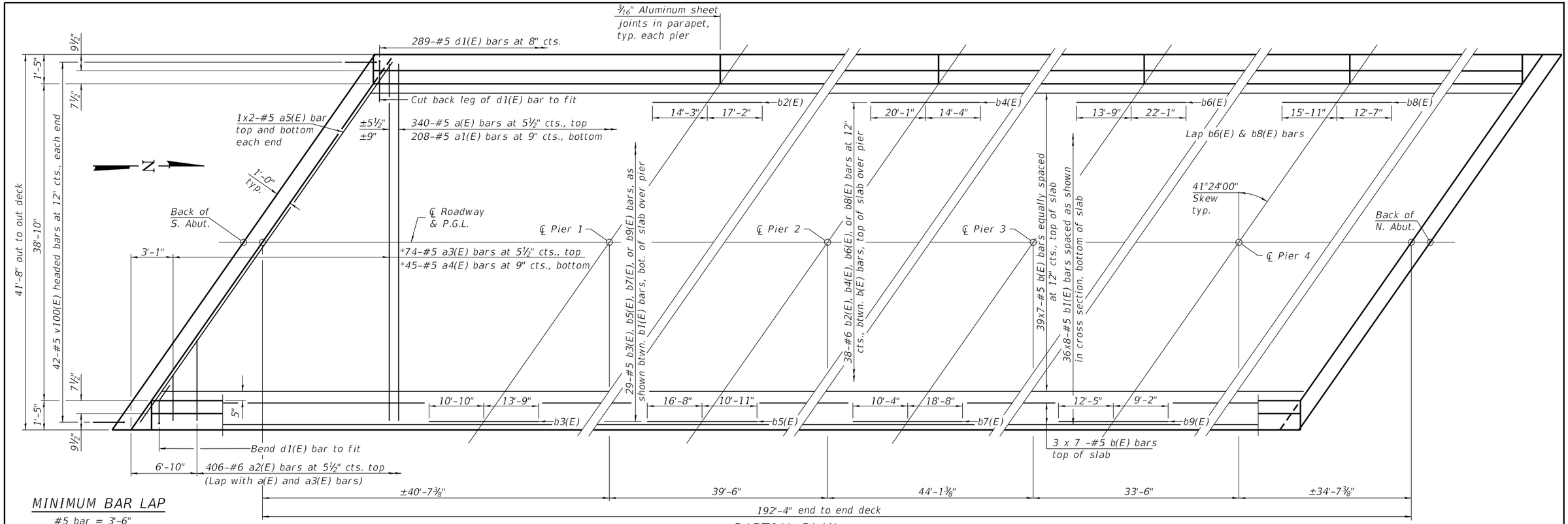

MINIMUM BAR LAP

#5 bar = 3'-6"
#6 bar = 4'-5"

* See Field Cutting Diagram on sheet 10 of 35.

PARTIAL PLAN

Notes:
See sheet 10 of 35 for superstructure details and Bill of Material.
Bars indicated thus 39 x 7-#5 etc. indicates 39 lines of bars with 7 lengths per line.

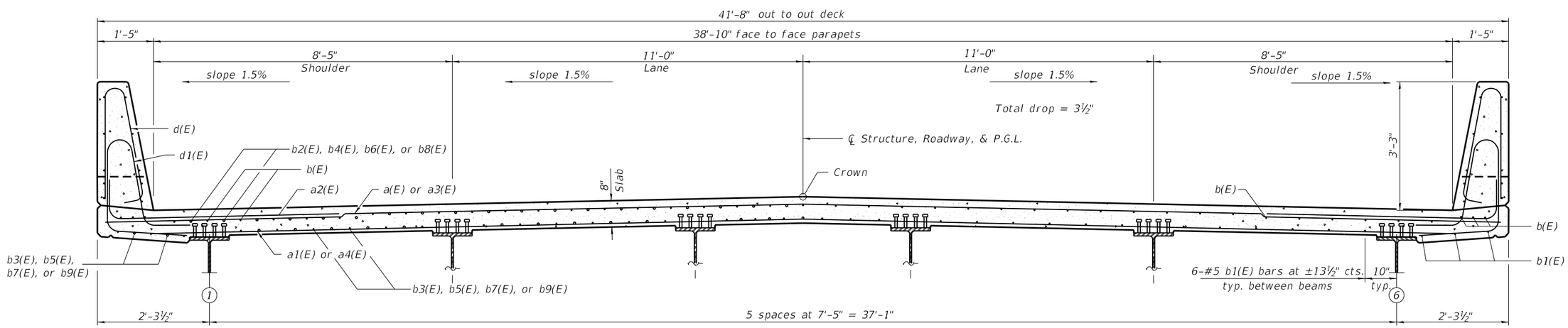

NEAR PIER

NEAR MIDSPAN

CROSS SECTION

(Looking North)

~~S1-SB-2-L(>30°)~~ ~~5-15-2023~~

FILE NAME = P:\2022\220616\Cad\02 Design\CADD_Sheets\220616-sht-bridge.dgn	DESIGNED - I.P.N.	REVISED -	STATE OF ILLINOIS DEPARTMENT OF TRANSPORTATION	SUPERSTRUCTURE STRUCTURE NO. 045-9132	T.R.	SECTION	COUNTY	TOTAL SHEETS	SHEET NO.
HAMPTON, LENZINI AND RENWICK, INC. 3085 STEVENSON DRIVE, SUITE 201 SPRINGFIELD, ILLINOIS 62703 ILLINOIS PROFESSIONAL DESIGN FIRM LS / PE / SE CORP. 184.000959	USER NAME = Inllausen	CHECKED - S.T.M.	REVISED -		2110	17-12082-01-BR	KANE	84	41
	PLOT SCALE =	DRAWN - I.P.N.	REVISED -		MUIRHEAD ROAD / CNNN R.R.		CONTRACT NO. 61K26		
	PLOT DATE = 1/18/2024	CHECKED - S.T.M.	REVISED -	SHEET NO. 9 OF 35 SHEETS	ILLINOIS	FED. AID PROJECT NO. ZU0Q(831)			

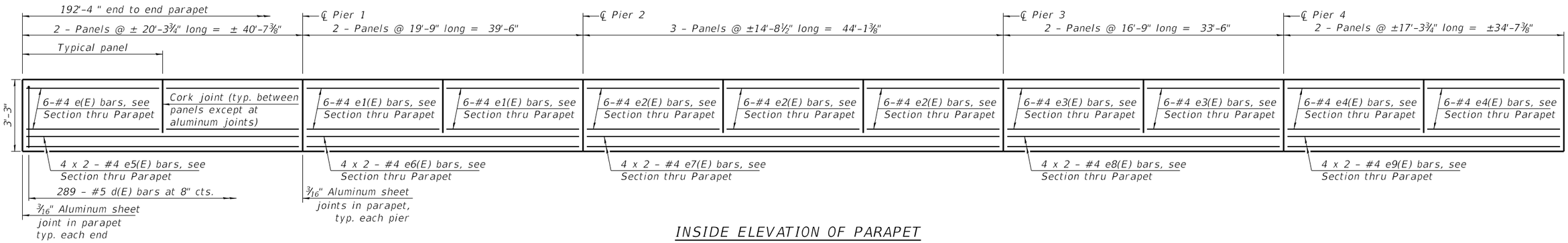

INSIDE ELEVATION OF PARAPET

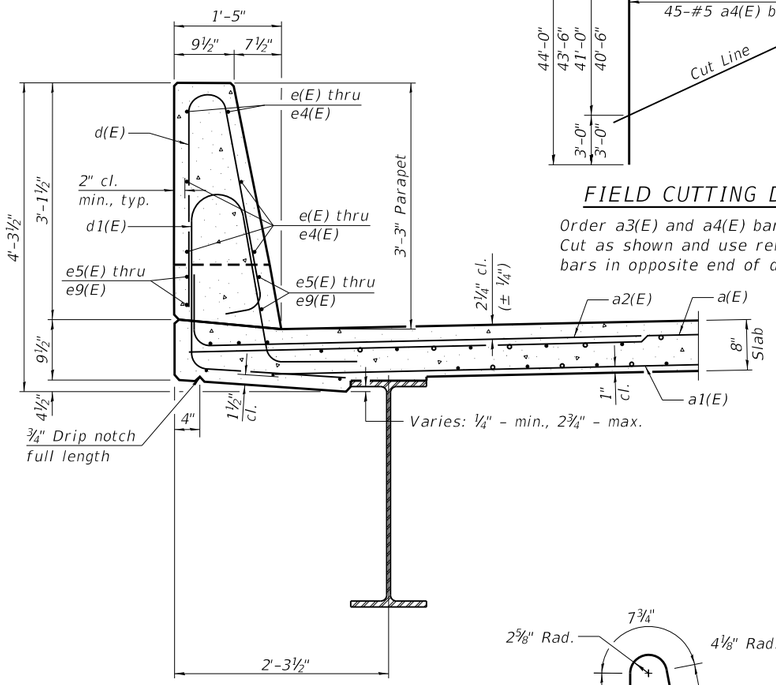

SECTION THRU PARAPET

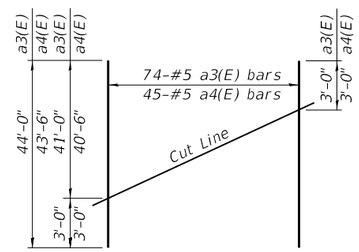

FIELD CUTTING DIAGRAM

Order a3(E) and a4(E) bars full length. Cut as shown and use remainder of bars in opposite end of deck.

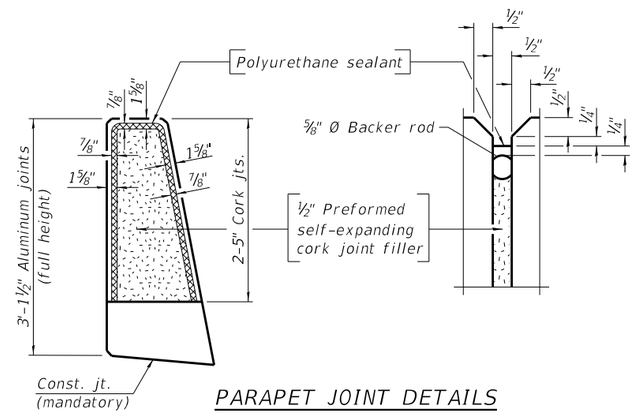

PARAPET JOINT DETAILS

Notes:

The 3/16" min. aluminum sheet shall be ASTM B 209 alloy 3003-H14 and coated with 5 mils of either bitumen paint or epoxy paint to minimize reaction with wet concrete. Cost included with Concrete Superstructure.

The polyurethane sealant shall be according to Article 1050.04 of the Std. Spec. and the color shall be gray.

Headed bars shall conform to ASTM A970 with threaded attachment; Class HA; and reinforcement bars conforming to ASTM A706. Cost included with Reinforcement Bars, Epoxy Coated.

MINIMUM BAR LAP

#4 bar = 2'-5"

SUPERSTRUCTURE BILL OF MATERIAL

Bar	No.	Size	Length	Shape
a(E)	340	#5	41'-4"	
a1(E)	208	#5	41'-4"	
a2(E)	812	#6	8'-4"	
a3(E)	74	#5	44'-0"	
a4(E)	45	#5	43'-6"	
a5(E)	8	#5	29'-4"	
b(E)	315	#5	30'-6"	
b1(E)	288	#5	27'-1"	
b2(E)	38	#6	31'-5"	
b3(E)	29	#5	24'-7"	
b4(E)	38	#6	34'-5"	
b5(E)	29	#5	27'-7"	
b6(E)	38	#6	35'-10"	
b7(E)	29	#5	29'-0"	
b8(E)	38	#6	28'-6"	
b9(E)	29	#5	21'-7"	
d(E)	578	#5	6'-5"	
d1(E)	578	#5	7'-7"	
e(E)	24	#4	19'-11"	
e1(E)	24	#4	19'-5"	
e2(E)	36	#4	14'-4"	
e3(E)	24	#4	16'-5"	
e4(E)	24	#4	16'-11"	
e5(E)	16	#4	21'-5"	
e6(E)	16	#4	20'-10"	
e7(E)	16	#4	23'-2"	
e8(E)	16	#4	17'-10"	
e9(E)	16	#4	18'-5"	
m10(E)	12	#6	29'-5"	
m11(E)	20	#6	9'-4"	
m12(E)	8	#6	2'-6"	
s100(E)	78	#5	6'-0"	
s101(E)	78	#5	8'-9"	
v100(E)	84	#5	3'-1"	
Concrete Superstructure			Cu. Yds.	266.8
Bridge Deck Grooving			Sq. Yds.	830
Protective Coat			Sq. Yds.	1,005
Reinforcement Bars, Epoxy Coated			Lbs.	81,560
Name Plates (Special)			Each	1

Bars indicated thus 4 x 2-#4 etc. indicates 4 line of bars with 2 lengths per line.

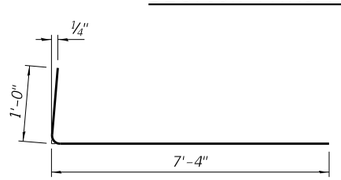

BAR a2(E)

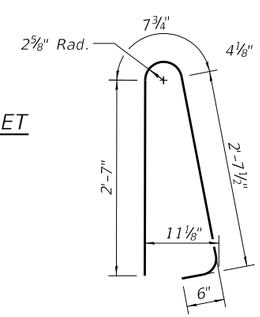

BAR d(E)

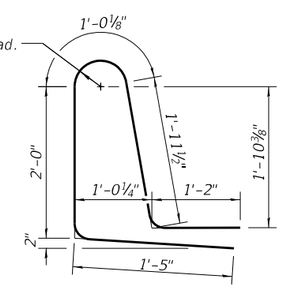

BAR d1(E)

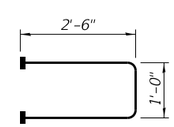

BAR s100(E)
(Headed)

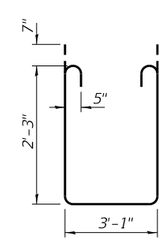

BAR s101(E)

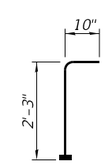

BAR v100(E)
(Headed)

~~SDI-SB-2~~ ~~2-1-2023~~

FILE NAME = P:\2022\220616\Cad\02 Design\CADD_Sheets\220616-sht-bridge.dgn	DESIGNED - I.P.N.	REVISED -	
HAMPTON, LENZINI AND RENWICK, INC. 3085 STEVENSON DRIVE, SUITE 201 SPRINGFIELD, ILLINOIS 62703 ILLINOIS PROFESSIONAL DESIGN FIRM LS / PE / SE CORP. 184.000959	USER NAME = lnllausen	CHECKED - S.T.M.	REVISED -
	PLOT SCALE =	DRAWN - I.P.N.	REVISED -
	PLOT DATE = 1/18/2024	CHECKED - S.T.M.	REVISED -

STATE OF ILLINOIS
DEPARTMENT OF TRANSPORTATION

SUPERSTRUCTURE DETAILS
STRUCTURE NO. 045-9132

SHEET NO. 10 OF 35 SHEETS

T.R.	SECTION	COUNTY	TOTAL SHEETS	SHEET NO.
2110	17-12082-01-BR	KANE	84	42
MUIRHEAD ROAD / CNNN R.R.		CONTRACT NO. 61K26		
		ILLINOIS	FED. AID PROJECT NO. ZU0Q(831)	

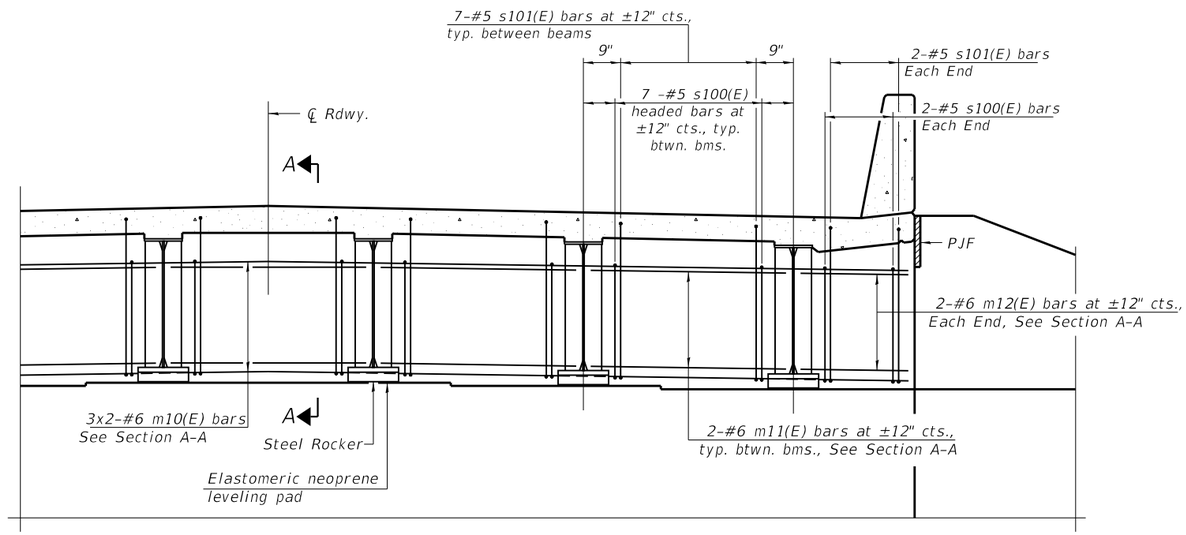

MINIMUM BAR LAP

#6 bar = 3'-7"

DIAPHRAGM AT ABUTMENT

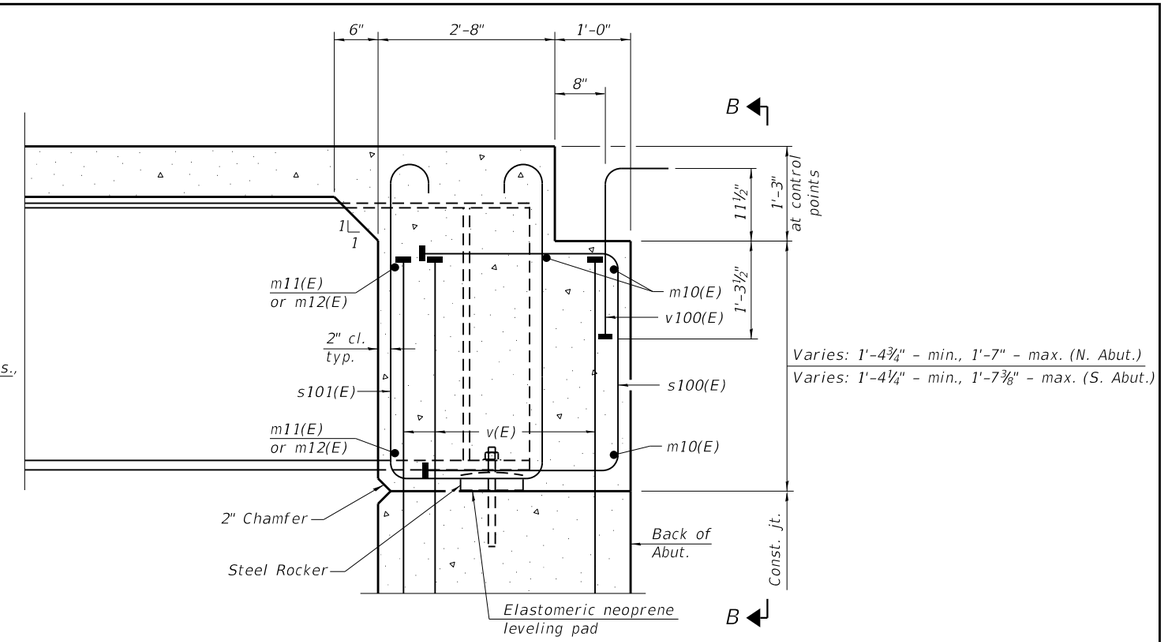

SECTION A-A

(at Rt. ∠'s)

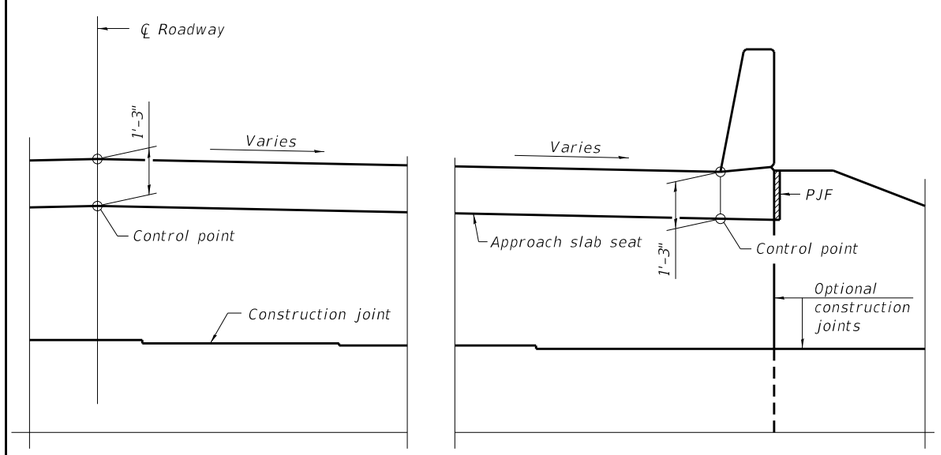

VIEW B-B

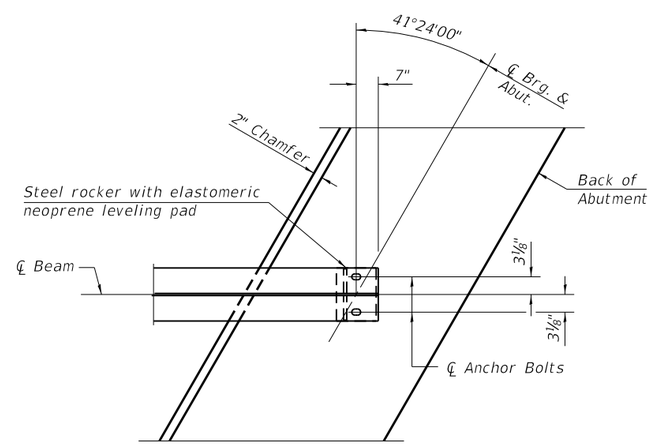

PLAN AT ABUTMENT

(Showing bottom flange of beam)

DETAILS FOR DOWNSTATION DIAPHRAGM

Location	Station	Offset	Control Point Elevation	Diaphragm Height
Lt. Control Pt.	17+68.98	-19.42'	926.83	1'-5 7/8"
℄ Control Pt.	17+51.86	0.00'	926.79	1'-6 3/4"
Rt. Control Pt.	17+34.74	19.42'	926.11	1'-4 7/8"

Location	Slope Bewteen Control Points
Lt.	0.19% ←
Rt.	-2.62% →

DETAILS FOR UPSTATION DIAPHRAGM

(left and right looking downstation)

Location	Station	Offset	Control Point Elevation	Diaphragm Height
Lt. Control Pt.	19+29.74	19.42'	927.71	1'-5 3/4"
℄ Control Pt.	19+46.86	0.00'	927.84	1'-6 3/4"
Rt. Control Pt.	19+63.98	-19.42'	927.35	1'-5 1/4"

Location	Slope Bewteen Control Points
Lt.	-0.53% ←
Rt.	-1.90% →

Notes:

See sheet 10 of 35 for superstructure details and Bill of Material.

See sheet 12 of 35 for PJF details.

The s100(E) and s101(E) bars shall be placed parallel to the beams. Spacing for these bars shall be at right angles to the beams.

The approach slab seat shall have a constant slope determined from the control points shown.

~~DIA-SB-L 2-1-2023~~

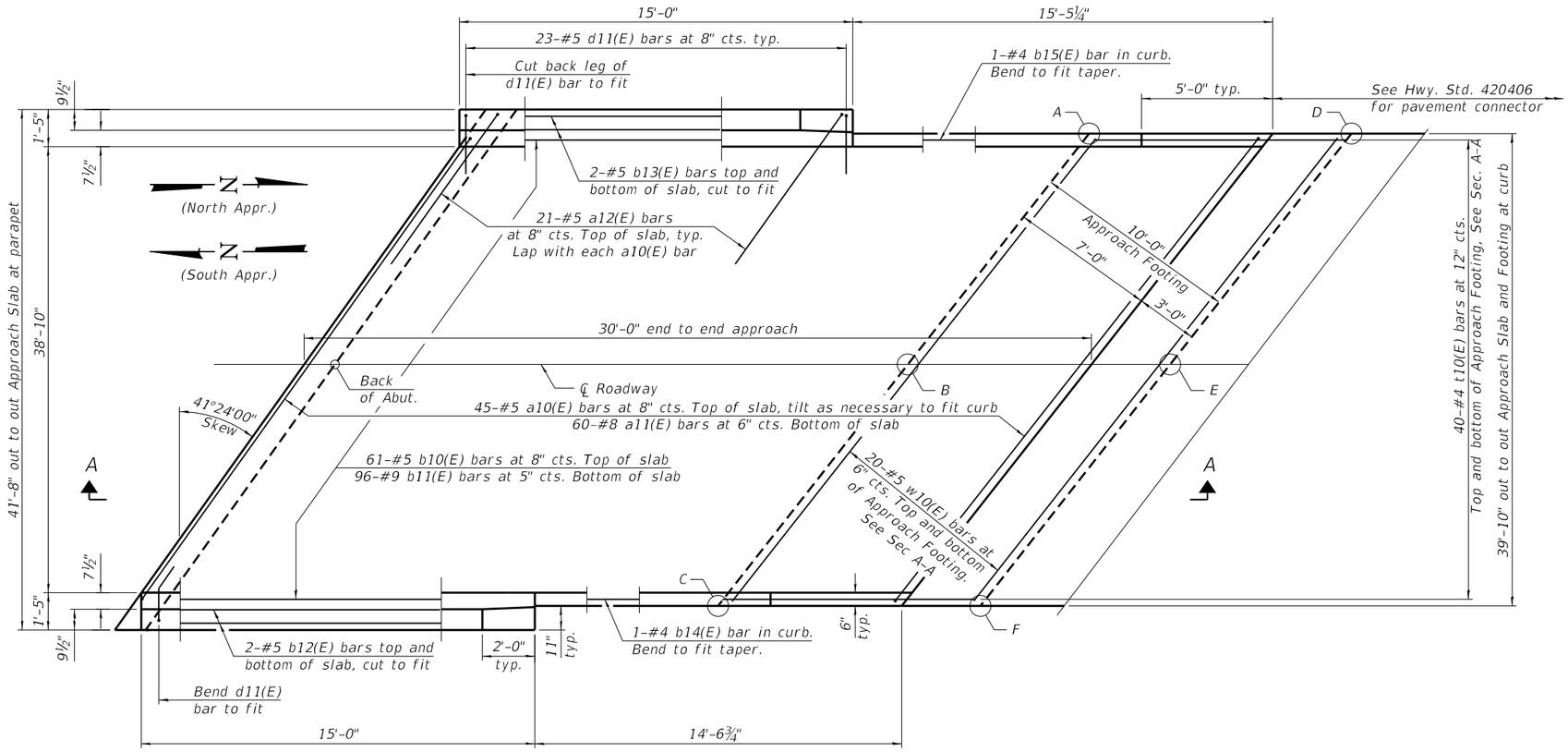

PLAN

(N approach slab shown; S approach slab similar by 180° rotation)

TOP & BOTTOM ELEVATIONS FOR DOWNSTATION APPROACH FOOTING

Location	Station	Offset	Top of Footing Elevations	Bottom of Footing Elevations
A	17+14.96	19.92'	925.58	924.75
B	17+32.52	0.00'	926.34	925.51
C	17+50.08	-19.92'	926.44	925.60
D	17+01.63	19.92'	925.20	924.37
E	17+19.19	0.00'	926.01	925.17
F	17+36.75	-19.92'	926.14	925.30

TOP & BOTTOM ELEVATIONS FOR UPSTATION APPROACH FOOTING

Location	Station	Offset	Top of Footing Elevations	Bottom of Footing Elevations
A	19+83.75	-19.92'	927.04	926.21
B	19+66.19	0.00'	927.61	926.78
C	19+48.64	19.92'	927.52	926.68
D	19+97.08	-19.92'	926.81	925.97
E	19+79.53	0.00'	927.42	926.59
F	19+61.97	19.92'	927.36	926.52

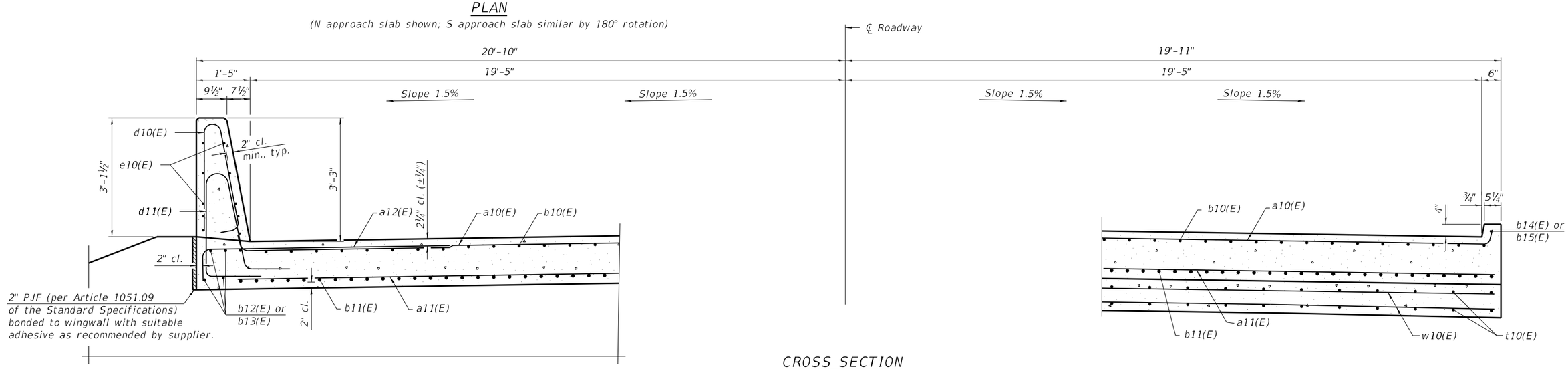

NEAR ABUTMENT

CROSS SECTION

AT APPROACH FOOTING

BAIA-CIP-39CS-L(>30°) 5-15-2023

(Sheet 1 of 2)

FILE NAME = P:\2022\220616\Cad\02 Design\CADD_Sheets\220616-sht-bridge.dgn	DESIGNED - I.P.N.	REVISED -	STATE OF ILLINOIS DEPARTMENT OF TRANSPORTATION
HAMPTON, LENZINI AND RENWICK, INC. 3085 STEVENSON DRIVE, SUITE 201 SPRINGFIELD, ILLINOIS 62703 ILLINOIS PROFESSIONAL DESIGN FIRM LS / PE / SE CORP. 184.000959	USER NAME = Inllausen	CHECKED - S.T.M.	REVISED -
	PLOT SCALE =	DRAWN - I.P.N.	REVISED -
	PLOT DATE = 1/18/2024	CHECKED - S.T.M.	REVISED -

BRIDGE APPROACH SLAB DETAILS
STRUCTURE NO. 045-9132

SHEET NO. 12 OF 35 SHEETS

T.R.	SECTION	COUNTY	TOTAL SHEETS	SHEET NO.
2110	17-12082-01-BR	KANE	84	44
MUIRHEAD ROAD / CNNN R.R.		CONTRACT NO. 61K26		
		ILLINOIS	FED. AID PROJECT NO. ZU0Q(831)	

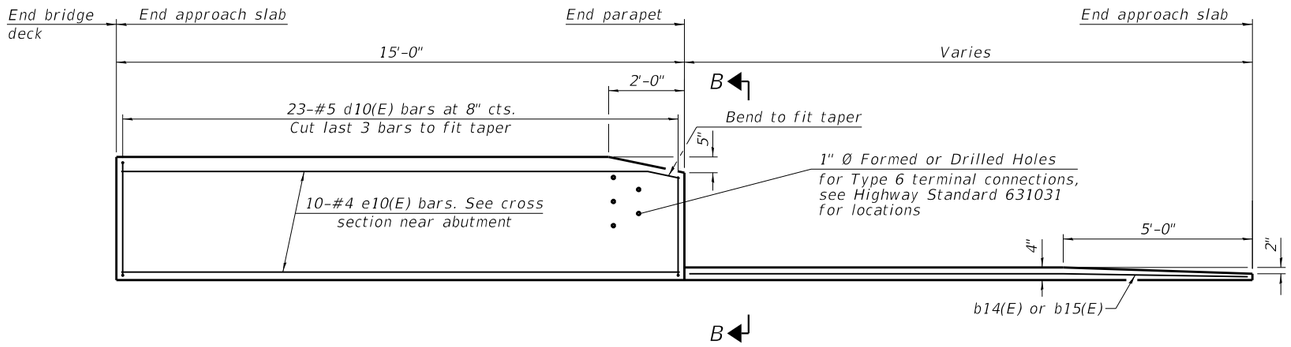

INSIDE ELEVATION OF PARAPET AND CURB

Notes:
Parapet concrete shall be paid for as Concrete Superstructure.
Approach slab shall be paid for as Concrete Superstructure (Approach Slab).
Approach footing concrete shall be paid for as Concrete Structures.
The approach footing maximum applied service bearing pressure (Qmax) = 2.0 ksf.
Cost of excavation for approach footing included with Concrete Structures.
For Granular Backfill for Structures and drainage treatment details, see sheet 2 of 35.

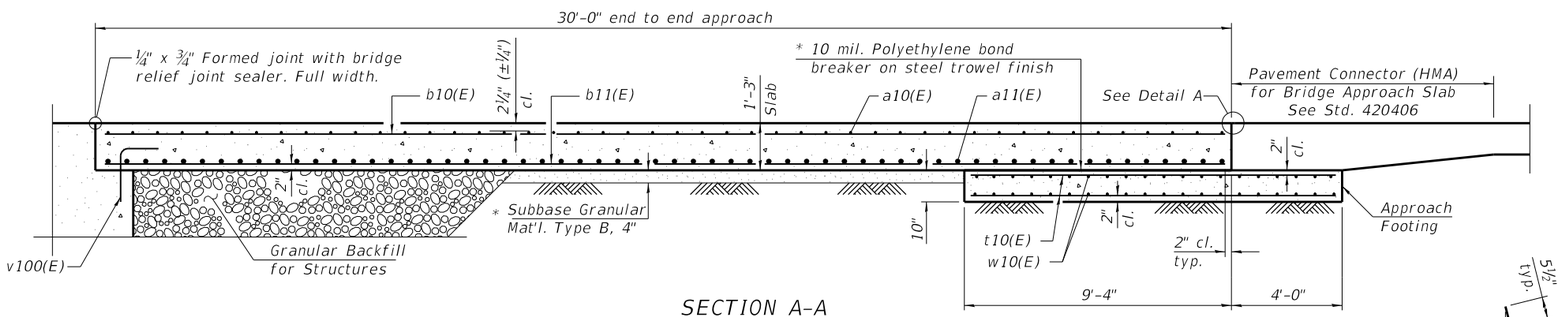

SECTION A-A

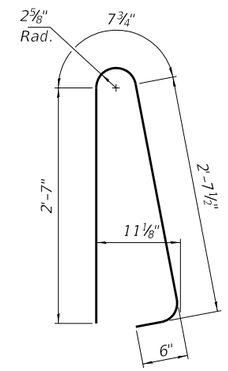

BAR d10(E)

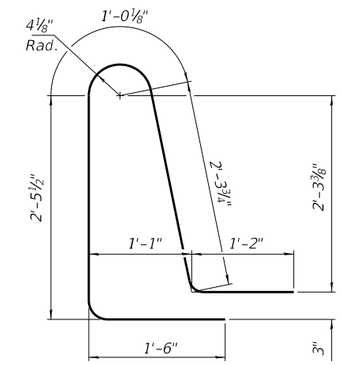

BAR d11(E)

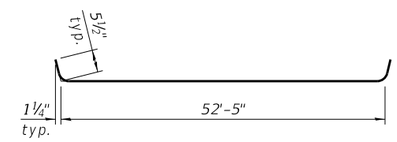

BAR a10(E)

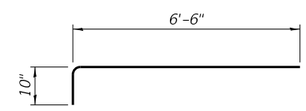

BAR a12(E)

TWO APPROACHES
BILL OF MATERIAL

Bar	No.	Size	Length	Shape
a10(E)	90	#5	53'-4"	
a11(E)	120	#8	52'-7"	
a12(E)	84	#5	7'-4"	
b10(E)	122	#5	29'-8"	
b11(E)	192	#9	29'-8"	
b12(E)	8	#5	15'-8"	
b13(E)	8	#5	14'-5"	
b14(E)	2	#4	14'-4"	
b15(E)	2	#4	14'-10"	
d10(E)	92	#5	6'-5"	
d11(E)	92	#5	8'-6"	
e10(E)	40	#4	14'-8"	
t10(E)	160	#4	12'-10"	
w10(E)	80	#5	52'-7"	
Concrete Structures			Cu. Yd.	24.4
Concrete Superstructure			Cu. Yd.	7.8
Bridge Deck Grooving			Sq. Yd.	258
Protective Coat			Sq. Yd.	300
Concrete Superstructure (Approach Slab)			Cu. Yd.	113.6
Reinforcement Bars, Epoxy Coated			Pound	53,520

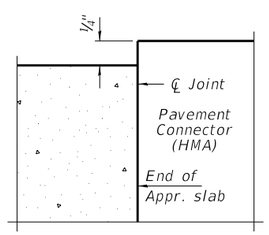

DETAIL A

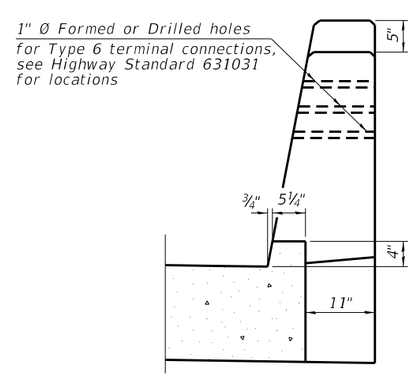

VIEW B-B

* Cost included with Concrete Superstructure (Approach Slab).

** Per manufacturer recommendations

~~BAIA-CIP-39CS-L(>30°) 5-15-2023~~

(Sheet 2 of 2)

FILE NAME = P:\2022\220616\Cad\02 Design\CADD_Sheets\220616-sht-bridge.dgn	DESIGNED - I.P.N.	REVISED -	STATE OF ILLINOIS DEPARTMENT OF TRANSPORTATION
HAMPTON, LENZINI AND RENWICK, INC. 3085 STEVENSON DRIVE, SUITE 201 SPRINGFIELD, ILLINOIS 62703 ILLINOIS PROFESSIONAL DESIGN FIRM LS / PE / SE CORP. 184.000959	USER NAME = Inlausen	CHECKED - S.T.M.	REVISED -
	PLOT SCALE =	DRAWN - I.P.N.	REVISED -
	PLOT DATE = 1/18/2024	CHECKED - S.T.M.	REVISED -

BRIDGE APPROACH SLAB DETAILS
STRUCTURE NO. 045-9132
SHEET NO. 13 OF 35 SHEETS

T.R.	SECTION	COUNTY	TOTAL SHEETS	SHEET NO.
2110	17-12082-01-BR	KANE	84	45
MUIRHEAD ROAD / CNNN R.R.		CONTRACT NO. 61K26		
		ILLINOIS	FED. AID PROJECT NO. ZU0Q(831)	

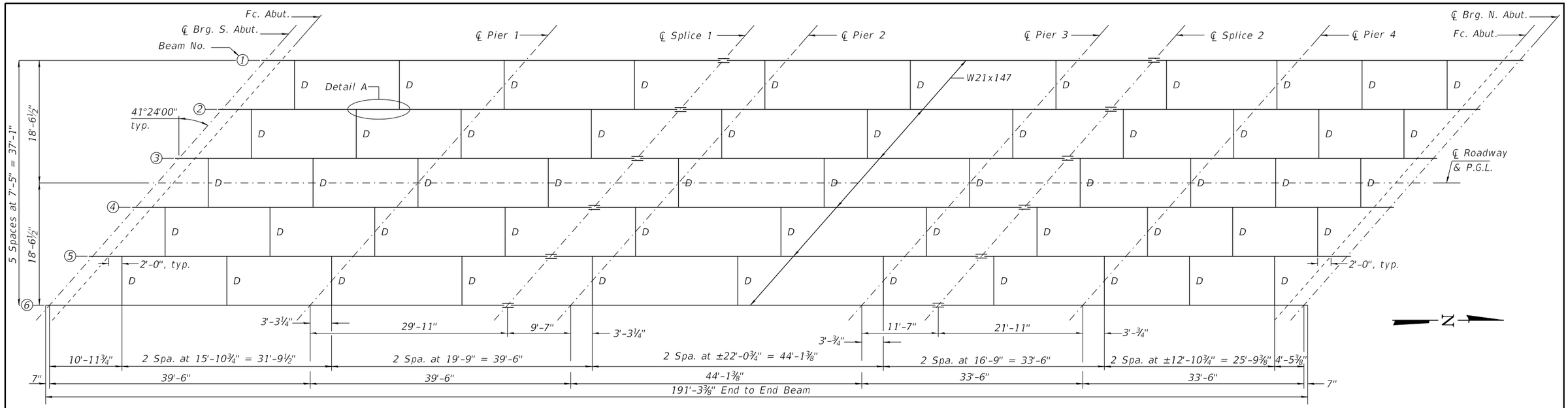

FRAMING PLAN

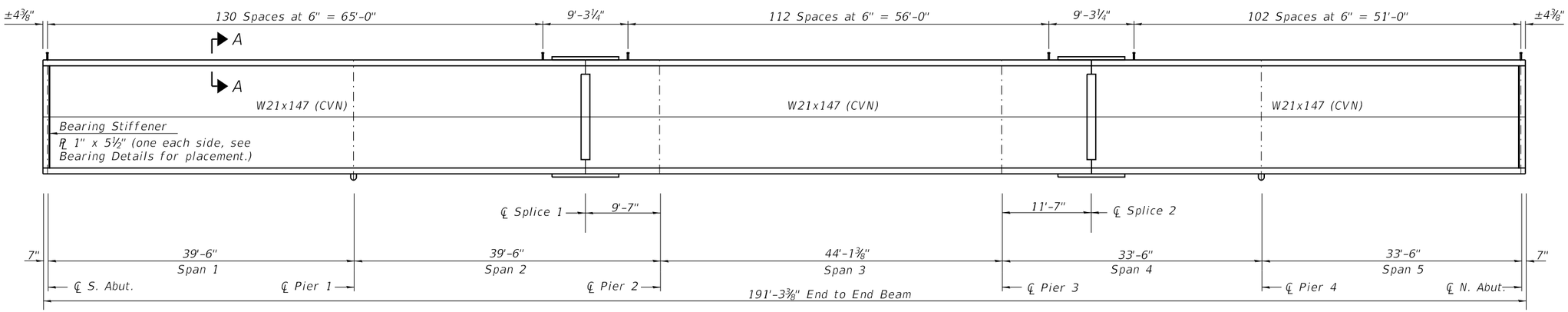

BEAM ELEVATION

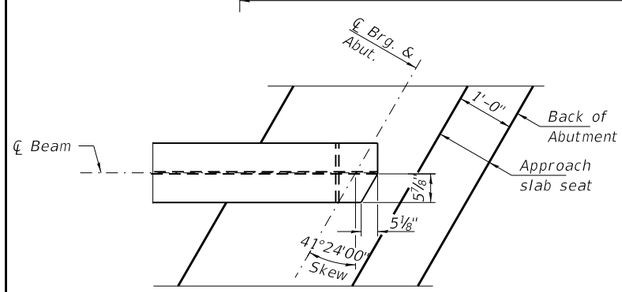

TOP FLANGE PLAN - CLIPPED

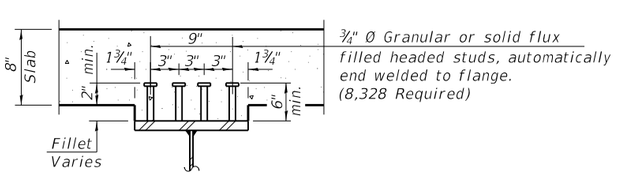

SECTION A-A

All cross frames or diaphragms between beams or girders shall be installed with erection pins and bolts in accordance with the erection plan approved by the Engineer. Individual cross frames or diaphragms at supports may be temporarily disconnected to install bearing anchor bolts.

Load carrying components designated "CVN" shall conform to the Charpy-V-Notch Impact Energy Requirement, Zone 2.

TOP OF BEAM ELEVATIONS

Location	BEAM 1	BEAM 2	BEAM 3	BEAM 4	BEAM 5	BEAM 6
℄ Brg S Abut	927.40	927.39	927.37	927.23	926.98	926.72
℄ Pier 1	927.84	927.87	927.89	927.80	927.58	927.36
℄ Splice 1	928.17	928.23	928.29	928.22	928.04	927.85
℄ Pier 2	928.18	928.26	928.32	928.27	928.10	927.92
℄ Pier 3	928.26	928.38	928.49	928.48	928.36	928.23
℄ Splice 2	928.28	928.41	928.53	928.54	928.43	928.31
℄ Pier 4	928.14	928.29	928.44	928.47	928.38	928.29
℄ Brg N Abut	927.93	928.12	928.30	928.37	928.31	928.25

INTERIOR GIRDER MOMENT TABLE										
		0.4 Sp. 1	Pier 1	0.5 Sp. 2	Pier 2	0.5 Sp. 3	Pier 3	0.5 Sp. 4	Pier 4	0.6 Sp. 5
I_s	(in^4)	3,630	3,630	3,630	3,630	3,630	3,630	3,630	3,630	3,630
$I_c(n)$	(in^4)	10,941	10,941	10,941	10,941	10,941	10,941	10,941	10,941	10,941
$I_c(3n)$	(in^4)	8,014	8,014	8,014	8,014	8,014	8,014	8,014	8,014	8,014
$I_c(cr)$	(in^4)	–	5,254	–	5,254	–	5,254	–	5,254	–
S_s	(in^3)	329	329	329	329	329	329	329	329	329
$S_c(n)$	(in^3)	509	509	509	509	509	509	509	509	509
$S_c(3n)$	(in^3)	457	457	457	457	457	457	457	457	457
$S_c(cr)$	(in^3)	–	387	–	387	–	387	–	387	–
S_x	(in^3)	560	680	526	676	551	671	517	660	547
DC1	(k/')	0.932	0.932	0.932	0.932	0.932	0.932	0.932	0.932	0.932
M_{DC1}	('k)	116	–147	39	–138	95	–125	19	–100	86
DC2	(k/')	0.175	0.175	0.175	0.175	0.175	0.175	0.175	0.175	0.175
M_{DC2}	('k)	22	–28	7	–26	18	–23	3	–19	16
DW	(k/')	0.371	0.371	0.371	0.371	0.371	0.371	0.371	0.371	0.371
M_{DW}	('k)	46	–59	16	–55	38	–50	7	–40	34
LLDF		0.638	0.638	0.638	0.629	0.620	0.641	0.667	0.667	0.667
M_{LL+IM}	('k)	369	–288	302	–282	322	–280	262	–244	315
f_l (Strength I)	(ksi)	15	–15	15	–15	15	–15	15	–15	15
$M_u + {}^1/_3 f_l S_x$	('k)	1,119	–1,094	829	–1,062	992	–1,030	713	–910	957
$\phi_f M_n$	('k)	2,334	–1,327	2,193	–1,314	2,297	–1,297	2,155	–1,263	2,279
f_s DC1	(ksi)	4.2	–5.4	1.4	–5.0	3.5	–4.5	0.7	–3.6	3.1
f_s DC2	(ksi)	0.6	–0.9	0.2	–0.8	0.5	–0.7	0.1	–0.6	0.4
f_s DW	(ksi)	1.2	–1.8	0.4	–1.7	1.0	–1.5	0.2	–1.2	0.9
f_s (LL+IM)	(ksi)	8.7	–8.9	7.1	–8.7	7.6	–8.7	6.2	–7.6	7.4
f_l (Service II)	(ksi)	10.0	–10.0	10.0	–10.0	10.0	–10.0	10.0	–10.0	10.0
$f_s + f_l/2$ (Service II)	(ksi)	22.3	–24.7	16.3	–23.9	19.8	–23.1	14.0	–20.3	19.1
Service II Resistance	(ksi)	47.5	47.5	47.5	47.5	47.5	47.5	47.5	47.5	47.5
$f_s + f_l/3$ (Strength I)	(ksi)	28.0	–31.1	20.1	–30.1	24.7	–29.1	17.1	–25.4	23.8
$\phi_f F_n$	(ksi)	50.0	35.1	50.0	35.1	50.0	35.1	50.0	35.1	50.0
V_f	(k)	27.9	–	30.1	–	28.6	–	30.6	–	26.9

GIRDER REACTION TABLE							
		S. Abut.	Pier 1	Pier 2	Pier 3	Pier 4	N. Abut.
LLDF		0.952	0.952	0.955	0.951	0.944	0.944
OCF		1.232	1.232	1.236	1.231	1.221	1.221
R_{DC1}	(k)	14.7	40.8	39.0	36.6	33.4	12.6
R_{DC2}	(k)	2.8	7.7	7.3	6.9	6.3	2.4
R_{DW}	(k)	5.8	16.2	15.5	14.6	13.3	5.0
R_{LL}	(k)	60.0	92.3	91.9	90.3	85.5	55.1
R_{IM}	(k)	16.2	20.8	20.7	20.6	20.0	15.1
R_{Total} (Strength I)(Impact)	(k)	163.9	282.8	278.2	270.2	254.2	149.1
R_{Total} (Strength I)(No Impact	(k)	135.5	246.4	242.1	234.2	219.2	122.7

I_s, S_s : Non-composite moment of inertia and section modulus of the steel section used for computing f_s(Total-Strength I, and Service II) due to non-composite dead loads (in.^{4} and in.^{3}).

$I_c(n)$, $S_c(n)$: Composite moment of inertia and section modulus of the steel and deck based upon the modular ratio, "n", used for computing f_s(Total-Strength I, and Service II) in uncracked sections due to short-term composite live loads (in.^{4} and in.^{3}).

$I_c(3n)$, $S_c(3n)$: Composite moment of inertia and section modulus of the steel and deck based upon 3 times the modular ratio, "3n", used for computing f_s(Total-Strength I, and Service II) in uncracked sections, due to long-term composite (superimposed) dead loads (in.^{4} and in.^{3}).

$I_c(cr)$, $S_c(cr)$: Composite moment of inertia and section modulus of the steel and longitudinal deck reinforcement, used for computing f_s (Total-Strength I and Service II) in cracked sections, due to both short-term composite live loads and long-term composite (superimposed) dead loads (in.^{4} and in.^{3}).

S_x : Section modulus about the major axis of a section to the controlling flange, tension or compression, taken as yield moment with respect to the controlling flange over the yield strength of the controlling flange (in.^{3}).

DC1: Un-factored non-composite dead load (kips/ft.).

M_{DC1} : Un-factored moment due to non-composite dead load (kip-ft.).

DC2: Un-factored long-term composite (superimposed excluding future wearing surface) dead load (kips/ft.).

M_{DC2} : Un-factored moment due to long-term composite (superimposed excluding future wearing surface) dead load (kip-ft.).

DW: Un-factored long-term composite (superimposed future wearing surface only) dead load (kips/ft.).

M_{DW} : Un-factored moment due to long-term composite (superimposed future wearing surface only) dead load (kip-ft.).

LLDF: Live Load Distribution Factor for moment and shear computed according to Article 4.6.2.2 and further IDOT provisions.

M_{LL+IM}: Un-factored live load moment plus dynamic load allowance (impact) (kip-ft.).

M_u : Strength I load combination of factored design moments (kip-ft.).
$1.25\ (M_{DC1} + M_{DC2}) + 1.5\ M_{DW} + 1.75\ M_{LL+IM}$

f_l : Factored calculated flange lateral bending stress as calculated using Article 6.10.1.6 and as further simplified by IDOT provisions (ksi).

$\phi_f M_n$: Factored nominal flexural resistance of the section determined as specified in Article 6.10.7.1 or A6 as applicable (kip-ft.).

f_s DC1: Un-factored stress at edge of flange for controlling steel flange due to vertical non-composite dead loads as calculated below (ksi).
M_{DC1} / S_s

f_s DC2: Un-factored stress at edge of flange for controlling steel flange due to vertical composite dead loads as calculated below (ksi).
$M_{DC2} / S_c(3n)$ or $M_{DC2} / S_c(cr)$ as applicable.

f_s DW: Un-factored stress at edge of flange for controlling steel flange due to vertical composite future wearing surface loads as calculated below (ksi).
$M_{DW} / S_c(3n)$ or $M_{DW} / S_c(cr)$ as applicable.

f_s (LL + IM): Un-factored stress at edge of flange for controlling steel flange due to vertical composite live load plus impact loads as calculated below (ksi).
$M_{LL+IM} / S_c(n)$ or $M_{LL+IM} / S_c(cr)$ as applicable.

$f_s + f_l/2$ (Service II): Sum of stresses as computed below (ksi).
f_s DC1 + f_s DC2 + f_s DW + 1.3 f_s (LL + IM) + $f_l/2$

Service II Resistance: Composite ($0.95R_hF_{yf}$) or noncomposite ($0.80R_hF_{yf}$) stress capacity according to Article 6.10.4.2 (ksi).

$f_s + f_l/3$ (Strength I): Sum of stresses as computed below on non-compact sections (ksi).
$1.25\ (f_s\ DC1 + f_s\ DC2) + 1.5\ f_s\ DW + 1.75\ f_s\ (LL + IM) + f_l/3$

$\phi_f F_n$: Factored nominal flexural resistance of the section as specified in Article 6.10.7.2 or 6.10.8 as applicable (ksi).

V_f: Maximum factored shear range in span computed according to Article 6.10.10.

OCF: Obtuse Correction Factor according to Article 4.6.2.2.3c or as further simplified by IDOT provisions.

R_{DC1} : Un-factored reaction due to non-composite dead load (kip).

R_{DC2} : Un-factored reaction due to long-term composite (superimposed excluding future wearing surface) dead load (kip).

R_{DW} : Un-factored reaction due to long-term composite (superimposed future wearing surface only) dead load (kip).

R_{LL} : Un-factored live load reaction (kip).

R_{IM} : Un-factored dynamic load allowance (impact) (kip).

R_{Total} (Strength I)(Impact): Strength I load combination of factored design reactions (kip).
$1.25\ (R_{DC1} + R_{DC2}) + 1.5R_{DW} + 1.75\ (R_{LL} + R_{IM})$

R_{Total} (Strength I)(No Impact): Strength I load combination of factored design reactions, not including dynamic load allowance (Impact) (kip).
$1.25\ (R_{DC1} + R_{DC2}) + 1.5R_{DW} + 1.75\ (R_{LL})$

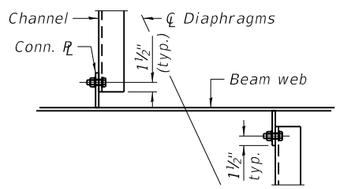

DETAIL A

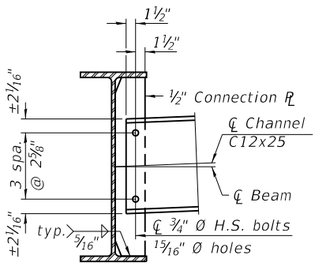

INTERIOR DIAPHRAGM

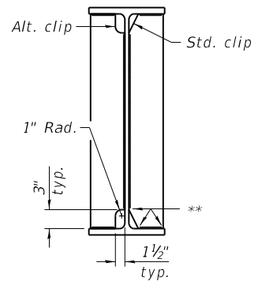

WELD LIMITS AND CLIP DETAILS

** Stop welds ¼" (±⅛") from edges as shown. Typical.

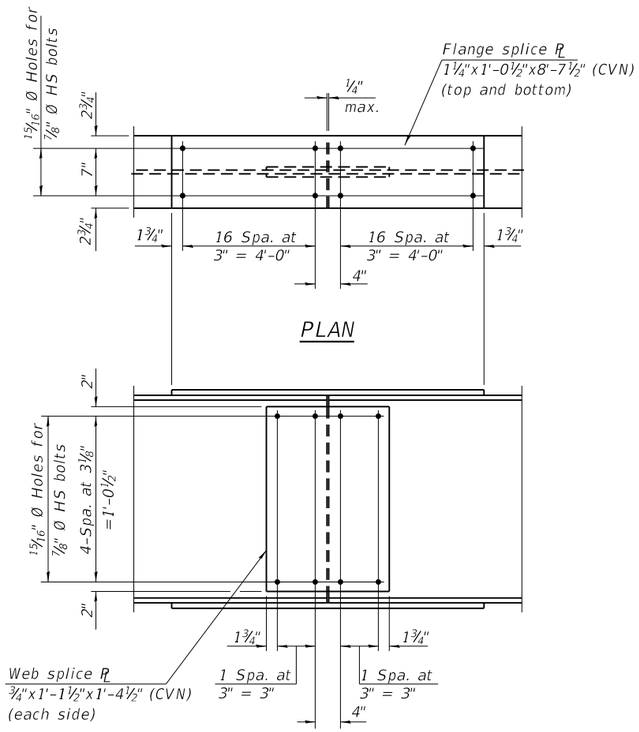

ELEVATION

SPLICE DETAIL

(12 Required)

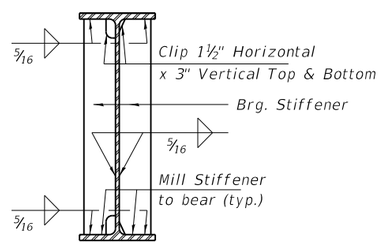

SECTION THRU BEARING STIFFENER

(Bearing Stiffeners at abutments)
See Beam Elevation for dimensions of bearing stiffeners.

BILL OF MATERIAL

Item	Unit	Total
Furnishing and Erecting Structural Steel	L Sum	1
Stud Shear Connectors	Each	8,328

Notes:

Two hardened washers required for each set of oversized holes.

Alternate channels of equal depth and larger weight are permitted to facilitate material acquisition. Alternate channels, if utilized, shall be provided at no additional cost to the Department.

Beams shall be braced for stability during erection and remain braced until the deck is poured and cured.

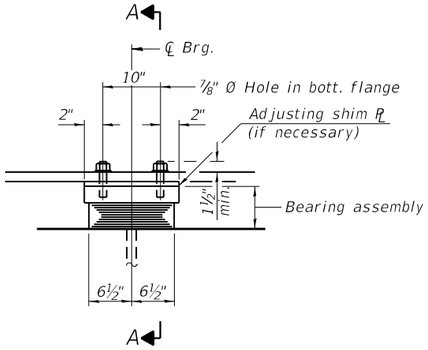

ELEVATION AT PIERS 2 & 3

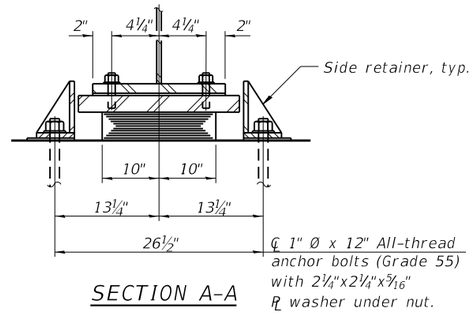

SECTION A-A

EXPANSION PIER TYPE I ELASTOMERIC EXP. BRG.

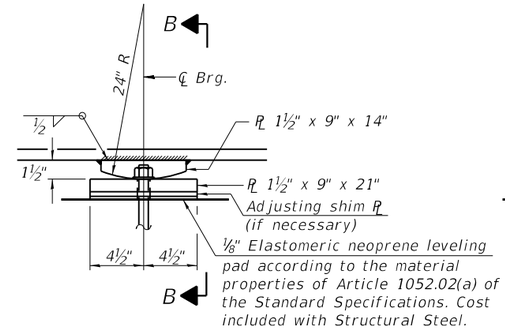

ELEVATION AT PIERS 1 & 4

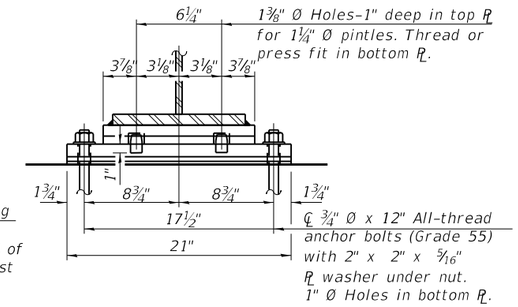

SECTION B-B

FIXED PIER BEARING

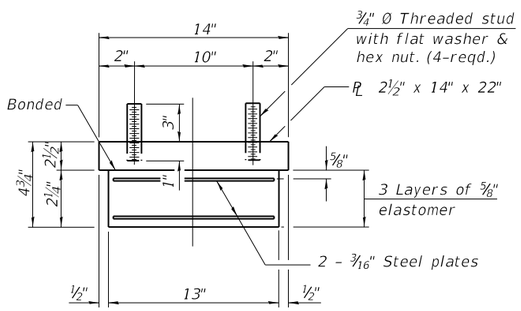

BEARING ASSEMBLY

Shim plates shall be placed atop bearing assembly, they shall not be placed under bearing assembly.

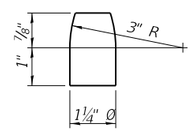

PINTLE

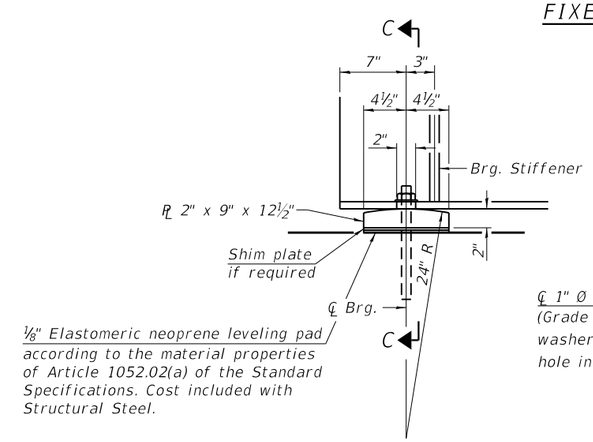

ELEVATION AT ABUTMENTS

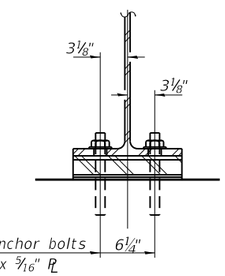

SECTION C-C

INTEGRAL ABUTMENT FIXED BEARING

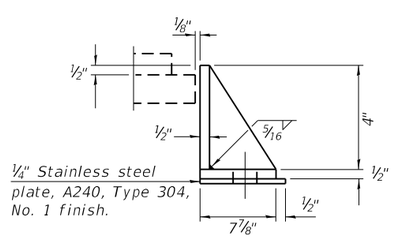

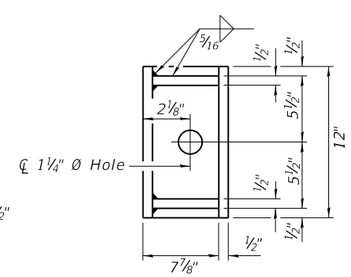

SIDE RETAINER

Equivalent rolled angle with stiffeners will be allowed in lieu of welded plates.

Notes:

Side retainers and stainless steel plates shall be included in the cost of Elastomeric Bearing Assembly, Type I.

Anchor bolts and side retainers at all supports shall be installed as each member is erected unless an equivalent temporary means of lateral restraint is used.

Fixed bearing plates, connection bolts, fill plates, and shim plates shall be included in the cost of Furnishing and Erecting Structural Steel.

Two ⅛ in. adjusting shims shall be provided for each bearing in addition to all other plates or shims and placed as shown on bearing details.

BILL OF MATERIAL

Item	Unit	Total
Elastomeric Bearing Assembly Type I	Each	12
Anchor Bolts, ¾"	Each	24
Anchor Bolts, 1"	Each	48

REQUIRED BEARING FILL PLATES

BEAM LINE	℄ BRG S ABUT	℄ PIER 1	℄ PIER 2	℄ PIER 3	℄ PIER 4	℄ BRG N ABUT
1	3/8"	-	-	-	-	-
2	1/4"	1/2"	-	-	-	-
3	-	-	-	1/8"	-	-
4	-	-	1/8"	-	3/8"	-
5	-	-	-	-	-	1/8"
6	-	-	-	-	-	1/8"

~~1-2E-1~~ ~~6-15-2019~~

Notes:
Pour steps monolithically with cap.
Headed bars shall conform to ASTM A970 with threaded attachment; Class HA; and reinforcement bars conforming to ASTM A706. Cost included with Reinforcement Bars, Epoxy Coated.
For details of piles see sheet 24 of 35.

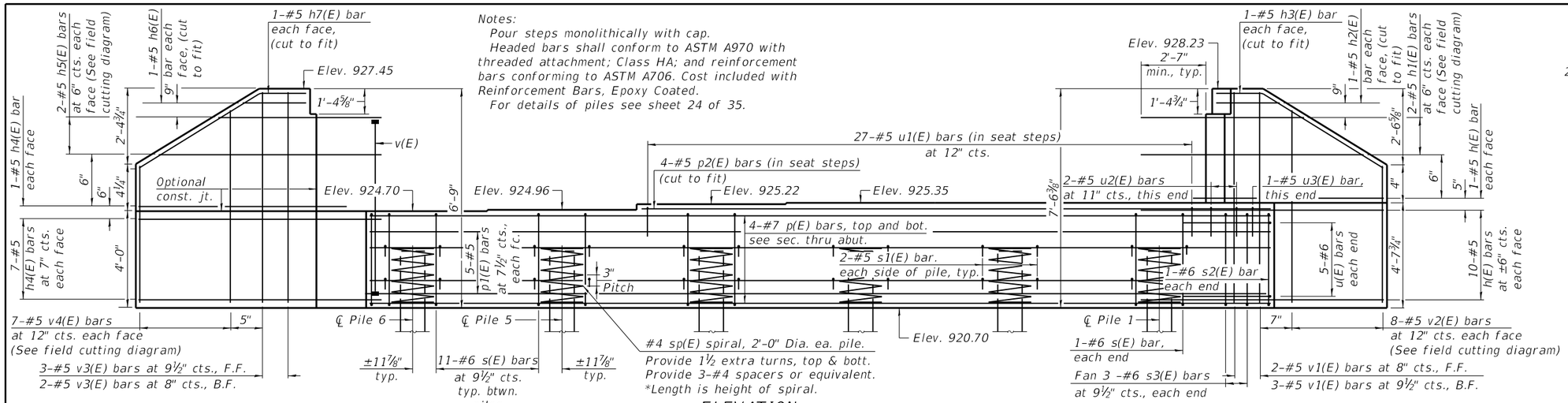

ELEVATION

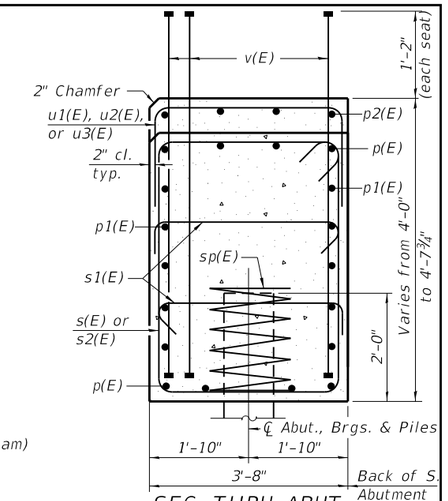

SEC. THRU ABUT.

Dimensions at right angles to abutment.

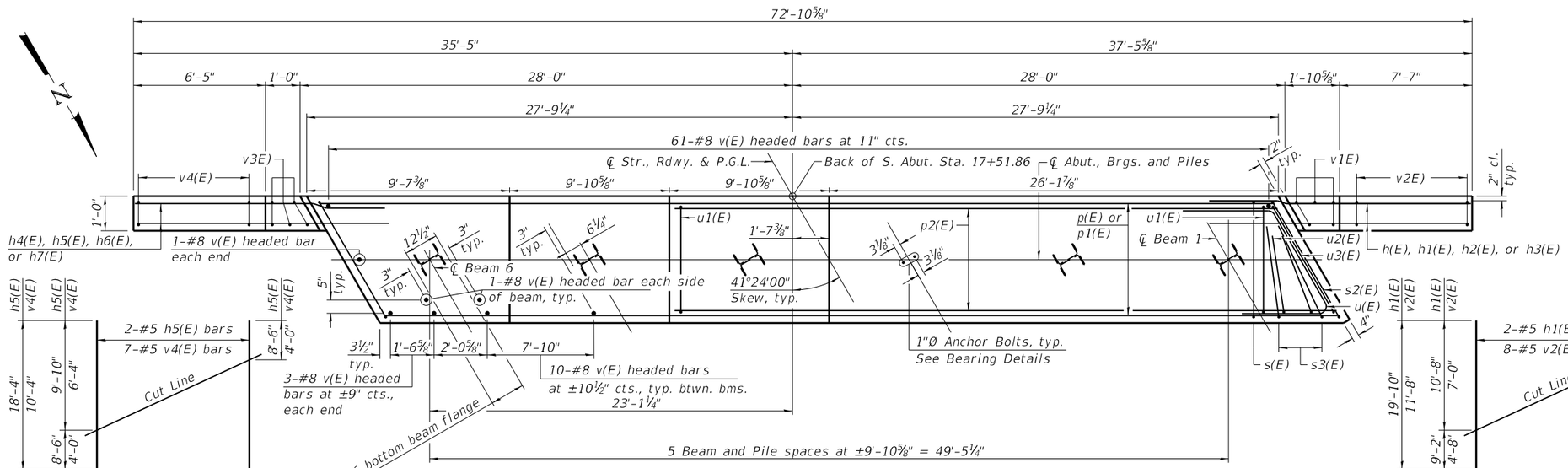

PLAN

FIELD CUTTING DIAGRAM

Order h5(E) and v4(E) full length. Cut as shown and use remainder of bars in opposite face.

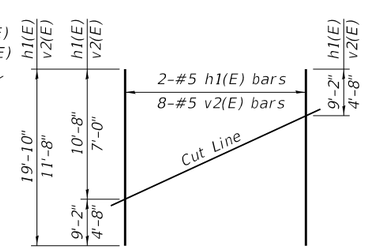

FIELD CUTTING DIAGRAM

Order h1(E) and v2(E) full length. Cut as shown and use remainder of bars in opposite face.

PILE DATA

Type: HP14X89
Nominal Required Bearing: 259 k/pile
Factored Resistance Available: 142 k/pile
Est. Length: 42'
No. Production Piles: 5
No. Test Piles: 1

BILL OF MATERIAL

Bar	No.	Size	Length	Shape
h(E)	22	#5	12'-2"	
h1(E)	2	#5	19'-10"	
h2(E)	2	#5	3'-9"	
h3(E)	2	#5	9'-4"	
h4(E)	16	#5	11'-0"	
h5(E)	2	#5	18'-4"	
h6(E)	2	#5	3'-3"	
h7(E)	2	#5	8'-2"	
p(E)	8	#7	55'-1"	
p1(E)	10	#5	55'-1"	
p2(E)	4	#5	28'-8"	
s(E)	57	#6	15'-4"	
s1(E)	24	#5	4'-4"	
s2(E)	2	#6	17'-4"	
s3(E)	6	#6	9'-4"	
* sp(E)	6	#4	2'-0"	
u(E)	10	#6	12'-11"	
u1(E)	20	#5	8'-2"	
u2(E)	2	#5	4'-8"	
u3(E)	1	#5	9'-2"	
v(E)	131	#8	5'-0"	
v1(E)	5	#5	7'-2"	
v2(E)	8	#5	11'-8"	
v3(E)	5	#5	6'-5"	
v4(E)	7	#5	10'-4"	
Structure Excavation		Cu. Yd.	10	
Concrete Structures		Cu. Yd.	37.6	
Protective Coat		Sq. Yd.	10	
Reinforcement Bars, Epoxy Coated		Pound	6,460	
Furnishing Steel Piles, HP14X89		Foot	210	
Driving Piles		Foot	210	
Test Steel Pile, HP14X89		Each	1	
Granular Backfill for Structures		Cu. Yd.	98	
Geocomposite Wall Drain		Sq. Yd.	48	
Pipe Underdrains for Structures 4"		Foot	98	

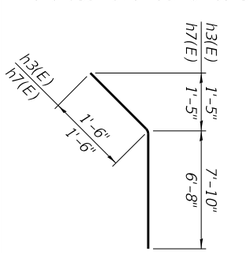

BARS h3(E) & h7(E)

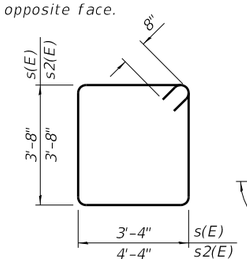

BARS s(E) & s2(E)

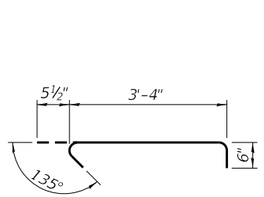

BAR s1(E)

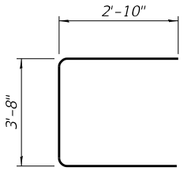

BAR s3(E)

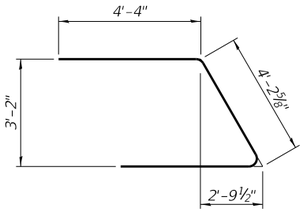

BAR u(E)

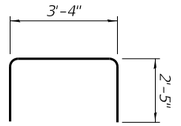

BAR u1(E)

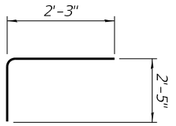

BAR u2(E)

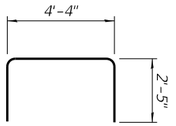

BAR u3(E)

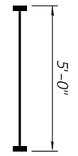

BAR v(E)
(Headed)

~~AI-SBS-L 6-15-2019~~

FILE NAME = P:\2022\220616\Cad\02 Design\CADD_Sheets\220616-sht-bridge.dgn	DESIGNED - I.P.N.	REVISED -	
HAMPTON, LENZINI AND RENWICK, INC. 3085 STEVENSON DRIVE, SUITE 201 SPRINGFIELD, ILLINOIS 62703 ILLINOIS PROFESSIONAL DESIGN FIRM LS / PE / SE CORP. 184.000959	USER NAME = Inllausen	CHECKED - S.T.M.	REVISED -
	PLOT SCALE =	DRAWN - I.P.N.	REVISED -
	PLOT DATE = 1/18/2024	CHECKED - S.T.M.	REVISED -

STATE OF ILLINOIS
DEPARTMENT OF TRANSPORTATION

SOUTH ABUTMENT
STRUCTURE NO. 045-9132

SHEET NO. 18 OF 35 SHEETS

T.R.	SECTION	COUNTY	TOTAL SHEETS	SHEET NO.
2110	17-12082-01-BR	KANE	84	50
MUIRHEAD ROAD / CNNN R.R.		CONTRACT NO. 61K26		
		ILLINOIS	FED. AID PROJECT NO. ZU0Q(831)	

Notes:
Pour steps monolithically with cap.
Headed bars shall conform to ASTM A970 with threaded attachment; Class HA; and reinforcement bars conforming to ASTM A706. Cost included with Reinforcement Bars, Epoxy Coated.
For details of piles see sheet 24 of 35.

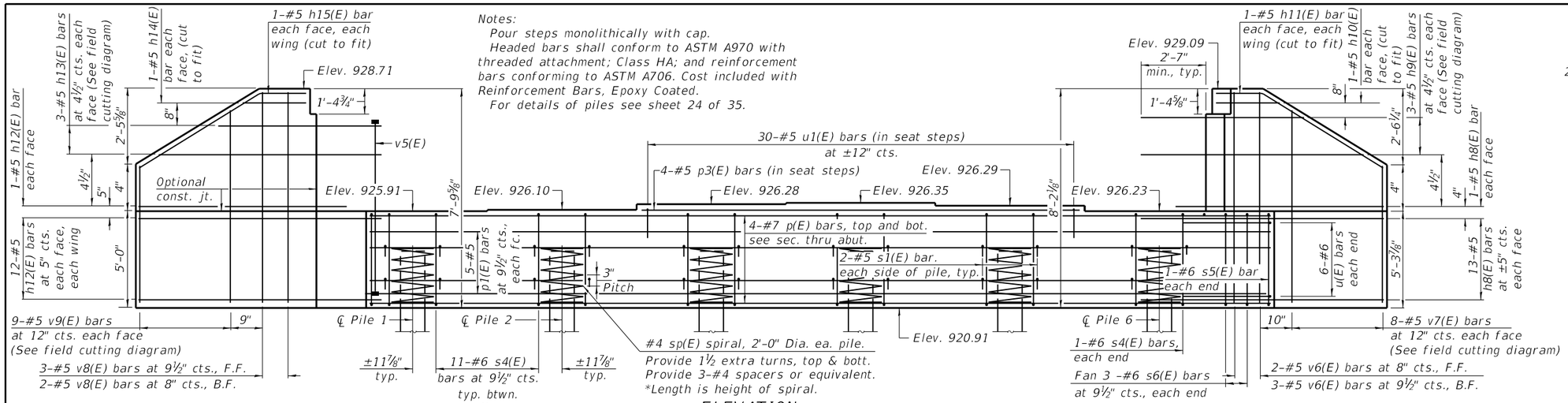

ELEVATION

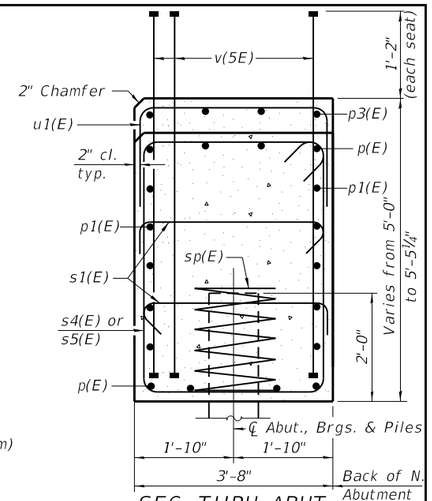

SEC. THRU ABUT.

Dimensions at right angles to abutment.

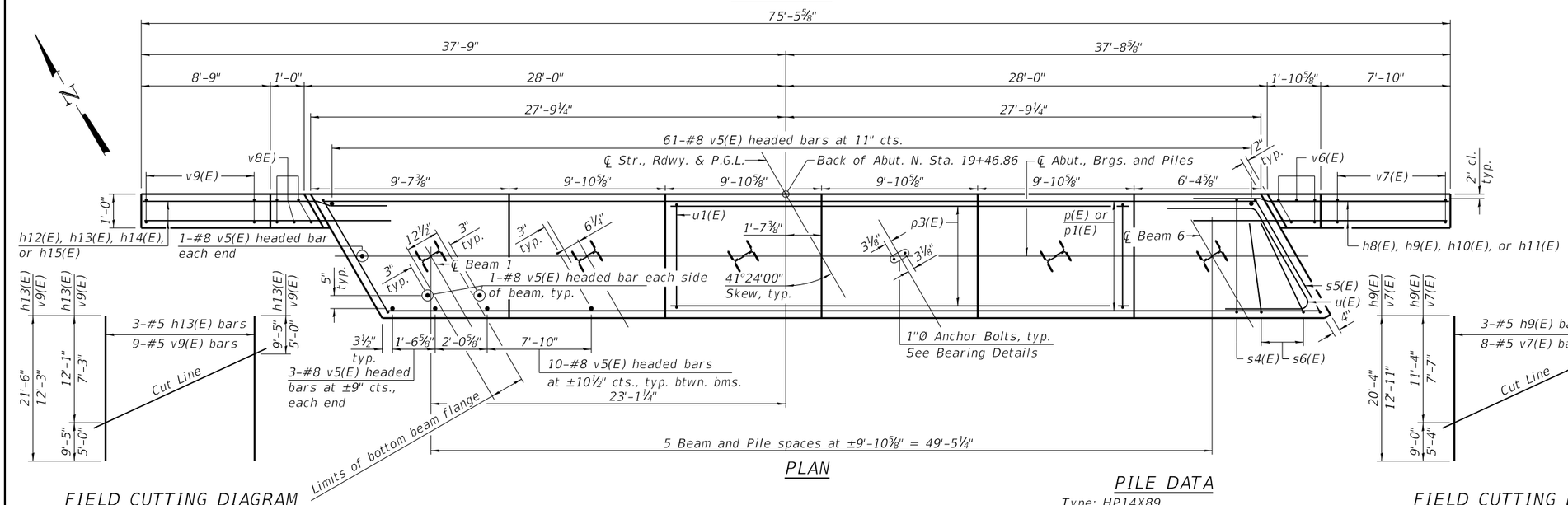

PLAN

FIELD CUTTING DIAGRAM

Order h13(E) and v9(E) full length. Cut as shown and use remainder of bars in opposite face.

PILE DATA

Type: HP14X89
Nominal Required Bearing: 253 k/pile
Factored Resistance Available: 139 k/pile
Est. Length: 44'
No. Production Piles: 5
No. Test Piles: 1

FIELD CUTTING DIAGRAM

Order h9(E) and v7(E) full length. Cut as shown and use remainder of bars in opposite face.

BILL OF MATERIAL

Bar	No.	Size	Length	Shape
h8(E)	28	#5	12'-5"	
h9(E)	3	#5	20'-4"	
h10(E)	2	#5	3'-9"	
h11(E)	2	#5	9'-7"	
h12(E)	26	#5	13'-4"	
h13(E)	3	#5	21'-6"	
h14(E)	2	#5	3'-10"	
h15(E)	2	#5	10'-5"	
p(E)	8	#7	55'-1"	
p1(E)	10	#5	55'-1"	
p3(E)	4	#5	29'-3"	
s1(E)	24	#5	4'-4"	
s4(E)	57	#6	17'-4"	
s5(E)	2	#6	19'-4"	
s6(E)	6	#6	10'-4"	
* sp(E)	6	#4	2'-0"	
u(E)	12	#6	12'-11"	
u1(E)	30	#5	8'-2"	
v5(E)	131	#8	6'-0"	
v6(E)	5	#5	7'-10"	
v7(E)	8	#5	12'-11"	
v8(E)	5	#5	7'-5"	
v9(E)	9	#5	12'-3"	
Structure Excavation		Cu. Yd.	10	
Concrete Structures		Cu. Yd.	45.0	
Protective Coat		Sq. Yd.	11	
Reinforcement Bars, Epoxy Coated		Pound	7,420	
Furnishing Steel Piles, HP14X89		Foot	220	
Driving Piles		Foot	220	
Test Steel Pile, HP14X89		Each	1	
Granular Backfill for Structures		Cu. Yd.	120	
Geocomposite Wall Drain		Sq. Yd.	61	
Pipe Underdrains for Structures 4"		Foot	105	

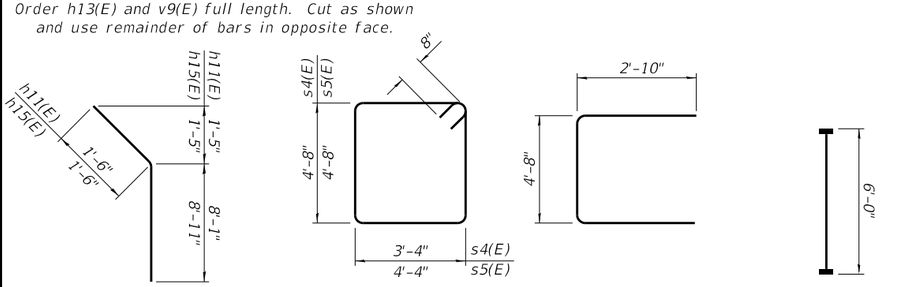

BARS h11(E) & h15(E) BARS s4(E) & s5(E) BAR s6(E) BAR v5(E) (Headed)

~~AI-SBS-L 6-15-2019~~

FILE NAME = P:\2022\220616\Cad\02 Design\CADD_Sheets\220616-sht-bridge.dgn	DESIGNED - I.P.N.	REVISED -	
HAMPTON, LENZINI AND RENWICK, INC. 3085 STEVENSON DRIVE, SUITE 201 SPRINGFIELD, ILLINOIS 62703 ILLINOIS PROFESSIONAL DESIGN FIRM LS / PE / SE CORP. 184.000959	USER NAME = Inllausen	CHECKED - S.T.M.	REVISED -
	PLOT SCALE =	DRAWN - I.P.N.	REVISED -
	PLOT DATE = 1/18/2024	CHECKED - S.T.M.	REVISED -

STATE OF ILLINOIS
DEPARTMENT OF TRANSPORTATION

NORTH ABUTMENT
STRUCTURE NO. 045-9132

SHEET NO. 19 OF 35 SHEETS

T.R.	SECTION	COUNTY	TOTAL SHEETS	SHEET NO.
2110	17-12082-01-BR	KANE	84	51
MUIRHEAD ROAD / CNNN R.R.		CONTRACT NO. 61K26		
		ILLINOIS FED. AID PROJECT NO. ZU0Q(831)		

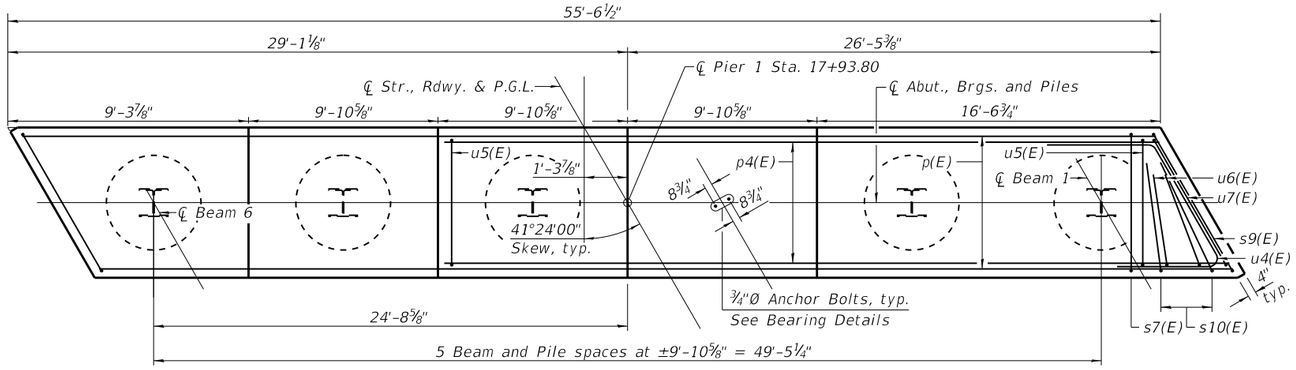

PLAN

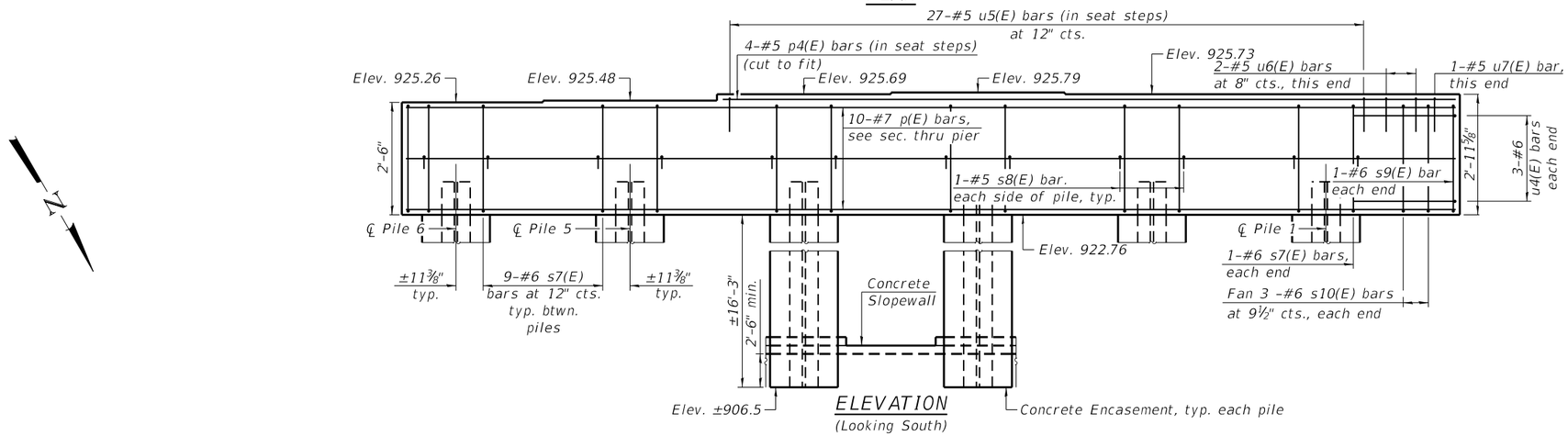

ELEVATION
(Looking South)

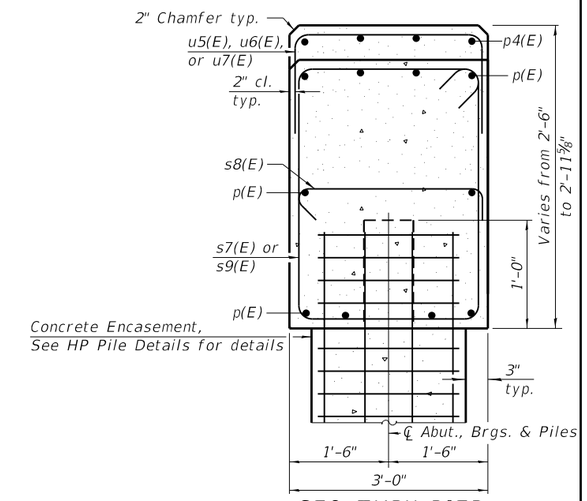

SEC. THRU PIER

Dimensions at right angles to abutment.

Notes:
Pour steps monolithically with cap.
For details of piles see sheet 24 of 35.

PILE DATA

Type: HP14X89
Nominal Required Bearing: 335 k/pile
Factored Resistance Available: 184 k/pile
Est. Length: 60'
No. Production Piles: 5
No. Test Piles: 1

BILL OF MATERIAL

Bar	No.	Size	Length	Shape
p(E)	10	#7	55'-1"	
p4(E)	4	#5	38'-3"	
s7(E)	47	#6	11'-0"	
s8(E)	12	#5	3'-8"	
s9(E)	2	#6	12'-6"	
s10(E)	6	#6	7'-2"	
u4(E)	6	#6	12'-0"	
u5(E)	37	#5	7'-6"	
u6(E)	2	#5	4'-5"	
u7(E)	1	#5	8'-3"	
Concrete Structures		Cu. Yd.	17.6	
Concrete Encasement		Cu. Yd.	17.1	
Reinforcement Bars, Epoxy Coated		Pound	2,630	
Furnishing Steel Piles, HP14X89		Foot	300	
Driving Piles		Foot	300	
Test Steel Pile, HP14X89		Each	1	

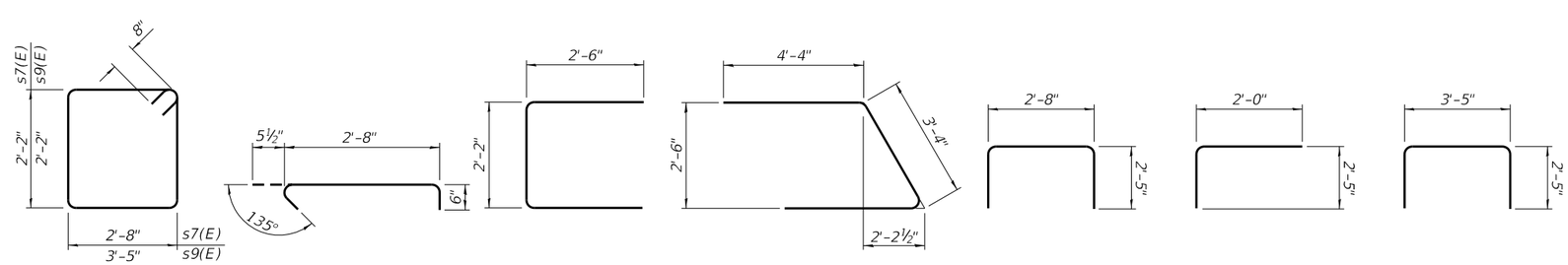

BARS s7(E) & s9(E) | BAR s8(E) | BAR s10(E) | BAR u4(E) | BAR u5(E) | BAR u6(E) | BAR u7(E)

FILE NAME = P:\2022\220616\Cad\02 Design\CADD_Sheets\220616-sht-bridge.dgn	DESIGNED - I.P.N.	REVISED -	STATE OF ILLINOIS DEPARTMENT OF TRANSPORTATION
HAMPTON, LENZINI AND RENWICK, INC. 3085 STEVENSON DRIVE, SUITE 201 SPRINGFIELD, ILLINOIS 62703 ILLINOIS PROFESSIONAL DESIGN FIRM LS / PE / SE CORP. 184.000959	USER NAME = Inllausen	CHECKED - S.T.M.	REVISED -
	PLOT SCALE =	DRAWN - I.P.N.	REVISED -
	PLOT DATE = 1/18/2024	CHECKED - S.T.M.	REVISED -

PIER 1
STRUCTURE NO. 045-9132
SHEET NO. 20 OF 35 SHEETS

T.R.	SECTION	COUNTY	TOTAL SHEETS	SHEET NO.
2110	17-12082-01-BR	KANE	84	52
MUIRHEAD ROAD / CNNN R.R.		CONTRACT NO. 61K26		
		ILLINOIS FED. AID PROJECT NO. ZU0Q(831)		

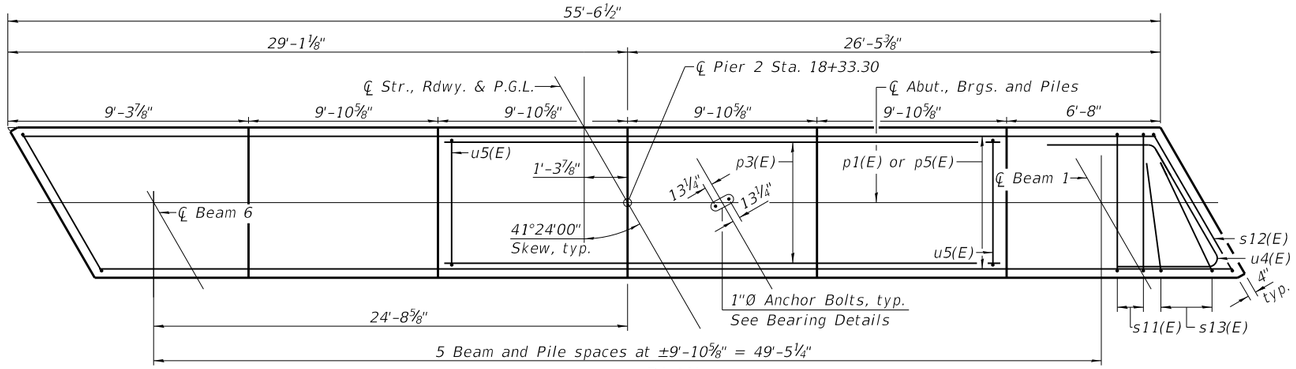

PLAN

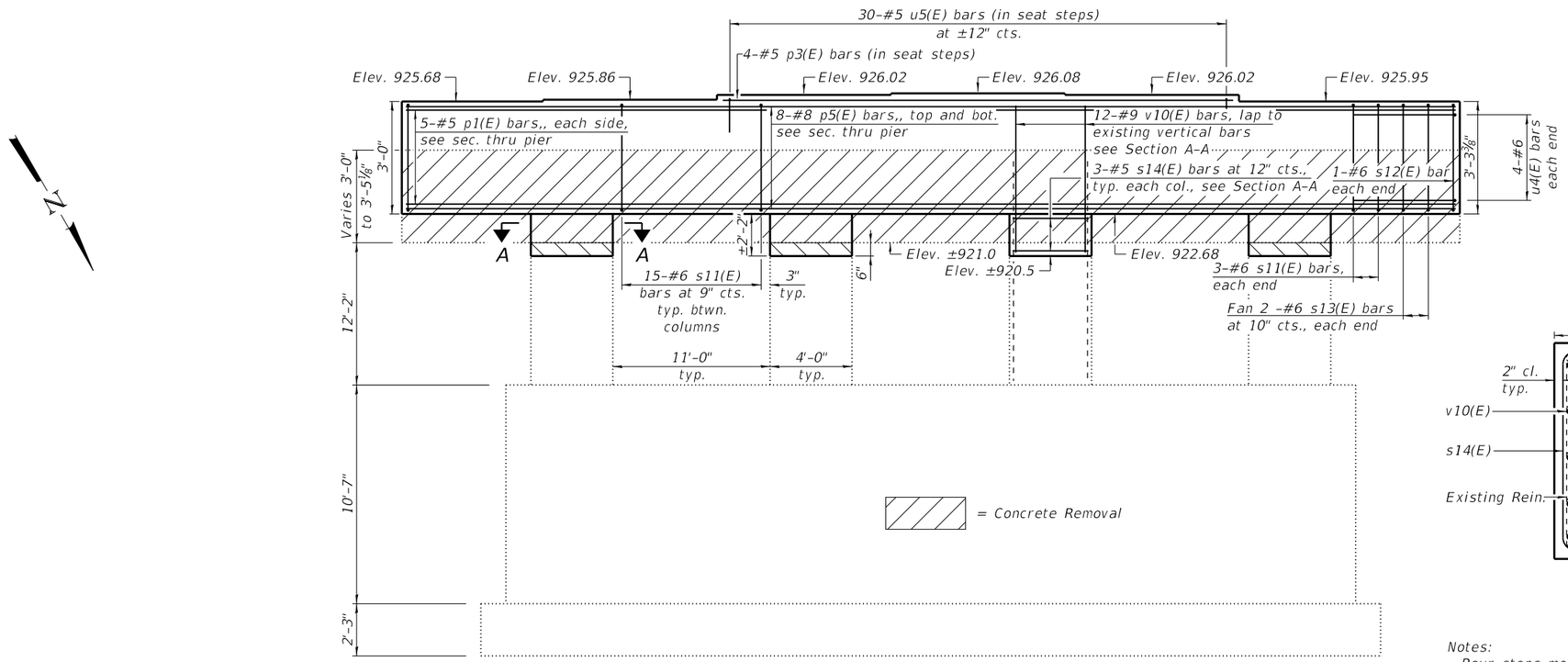

ELEVATION
(Looking South)

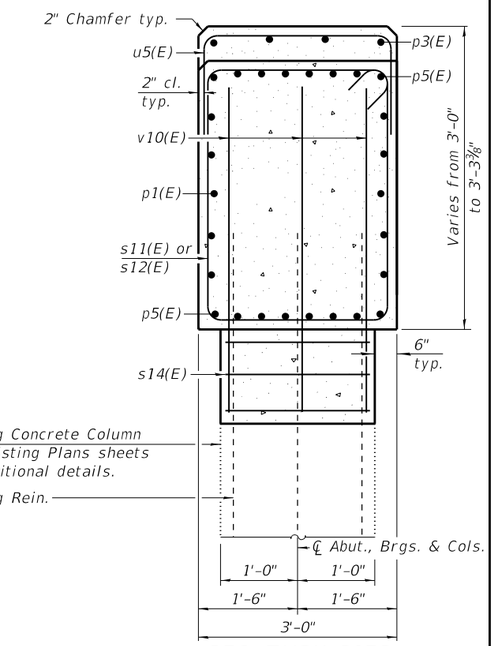

SEC. THRU PIER

Dimensions at right angles to abutment.
(existing pier cap not shown for clarity)

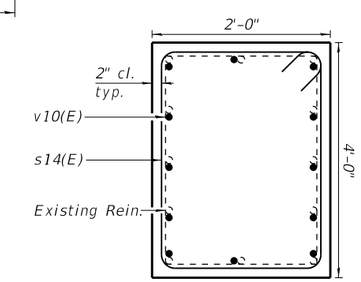

SECTION A-A

Notes:

Pour steps monolithically with cap.

Concrete damaged during Concrete Removal shall be repaired at the expense of the Contractor.

Structural Repair of Concrete shall be used to repair existing deterioration to areas of the pier columns and crashwalls as directed by the Engineer after Concrete Removal. The Contractor will be paid for the final quantity determined in the field and actually furnished at the unit price bid for the work.

Existing reinforcement shall be cleaned, straightened and incorporated into the new construction. Cost included with Concrete Removal.

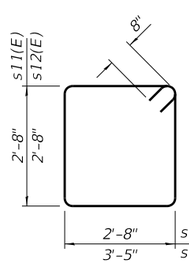

BARS s11(E) & s12(E)

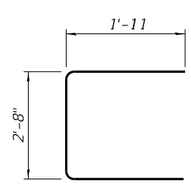

BAR s13(E)

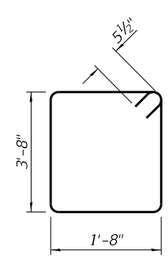

BAR s14(E)

BILL OF MATERIAL

Bar	No.	Size	Length	Shape
p1(E)	10	#5	55'-1"	
p3(E)	4	#5	29'-3"	
p5(E)	16	#8	55'-1"	
s11(E)	51	#6	12'-0"	
s12(E)	2	#6	13'-6"	
s13(E)	4	#6	6'-6"	
s14(E)	12	#5	11'-7"	
u4(E)	8	#6	12'-0"	
u5(E)	30	#5	7'-6"	
v10(E)	48	#9	5'-0"	
Concrete Removal			Cu. Yd.	20.8
Concrete Structures			Cu. Yd.	22.7
Reinforcement Bars, Epoxy Coated			Pound	5,390
Structural Repair of Concrete (Depth Equal to or Less Than 5 Inches)			Sq. Ft.	16

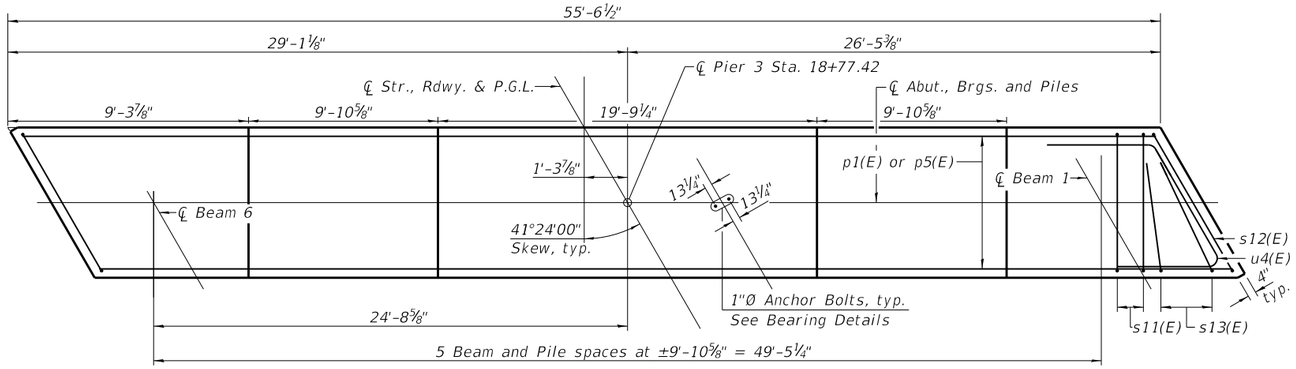

PLAN

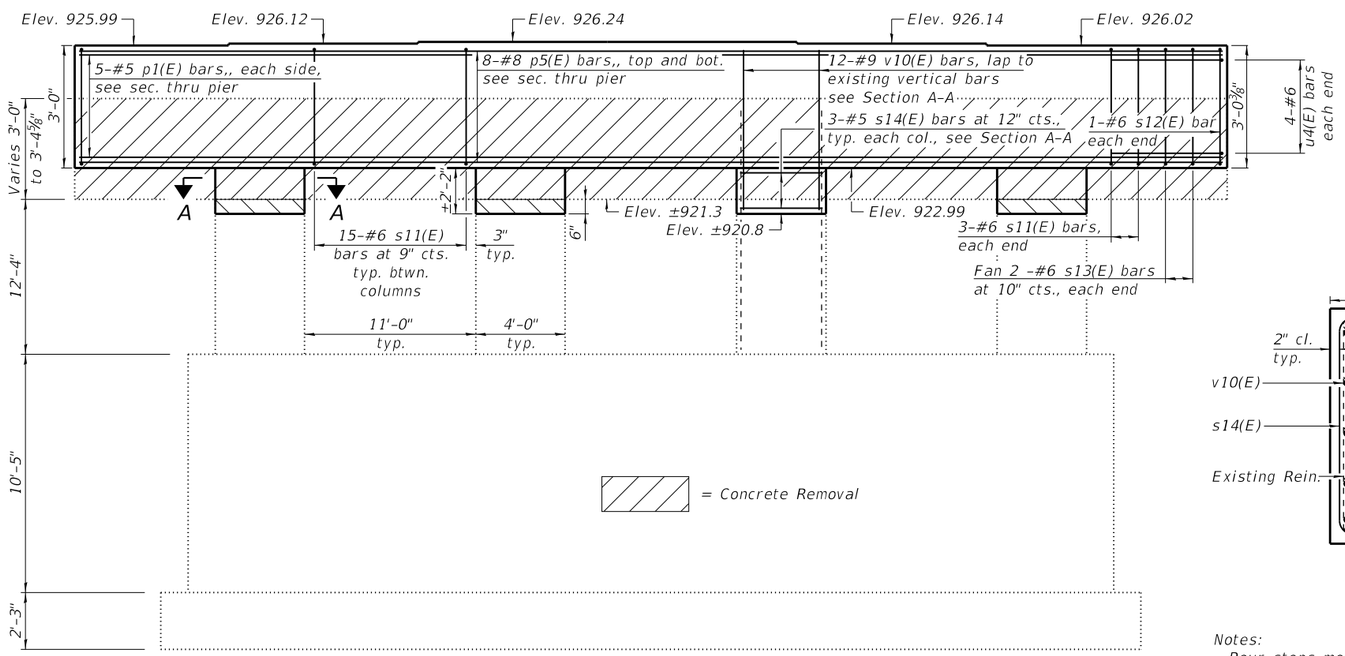

ELEVATION
(Looking South)

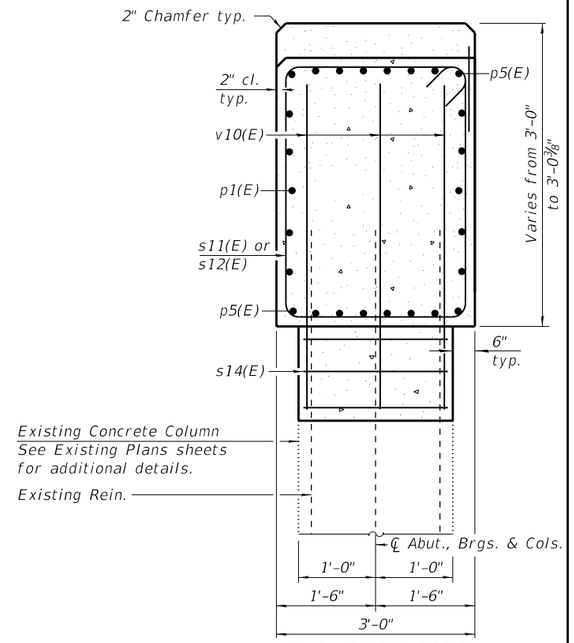

SEC. THRU PIER

Dimensions at right angles to abutment.
(existing pier cap not shown for clarity)

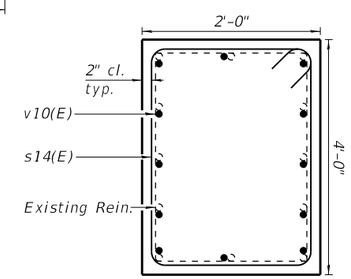

SECTION A-A

Notes:

Pour steps monolithically with cap.

Concrete damaged during Concrete Removal shall be repaired at the expense of the Contractor.

Structural Repair of Concrete shall be used to repair existing deterioration to areas of the pier columns and crashwalls as directed by the Engineer after Concrete Removal. The Contractor will be paid for the final quantity determined in the field and actually furnished at the unit price bid for the work.

Existing reinforcement shall be cleaned, straightened and incorporated into the new construction. Cost included with Concrete Removal.

BILL OF MATERIAL

Bar	No.	Size	Length	Shape
p1(E)	10	#5	55'-1"	
p5(E)	16	#8	55'-1"	
s11(E)	33	#6	12'-0"	
s12(E)	2	#6	13'-6"	
s13(E)	4	#6	6'-6"	
s14(E)	12	#5	11'-7"	
u4(E)	8	#6	12'-0"	
v10(E)	48	#9	5'-0"	
Concrete Removal			Cu. Yd.	20.7
Concrete Structures			Cu. Yd.	21.9
Reinforcement Bars, Epoxy Coated			Pound	5,040
Structural Repair of Concrete (Depth Equal to or Less Than 5 Inches)			Sq. Ft.	24

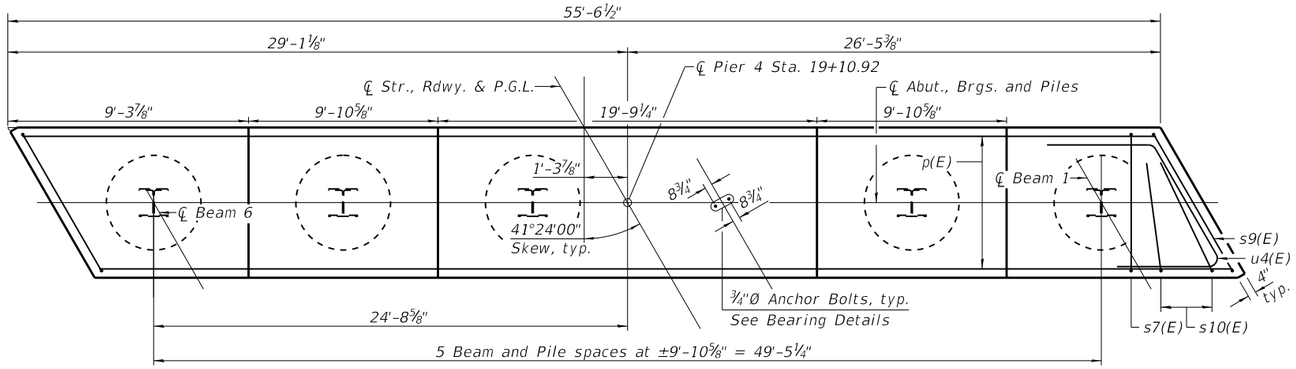

PLAN

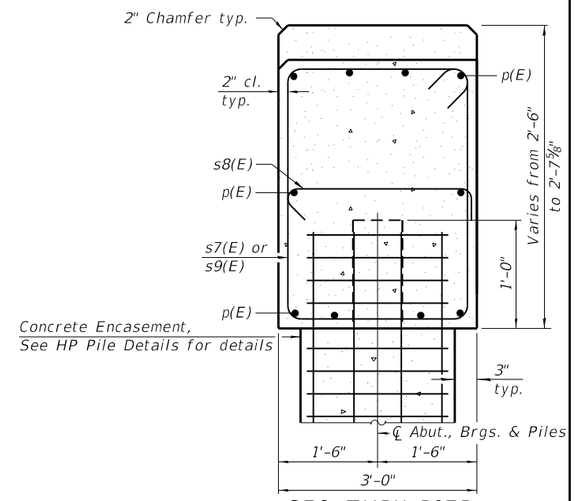

SEC. THRU PIER

Dimensions at right angles to abutment.

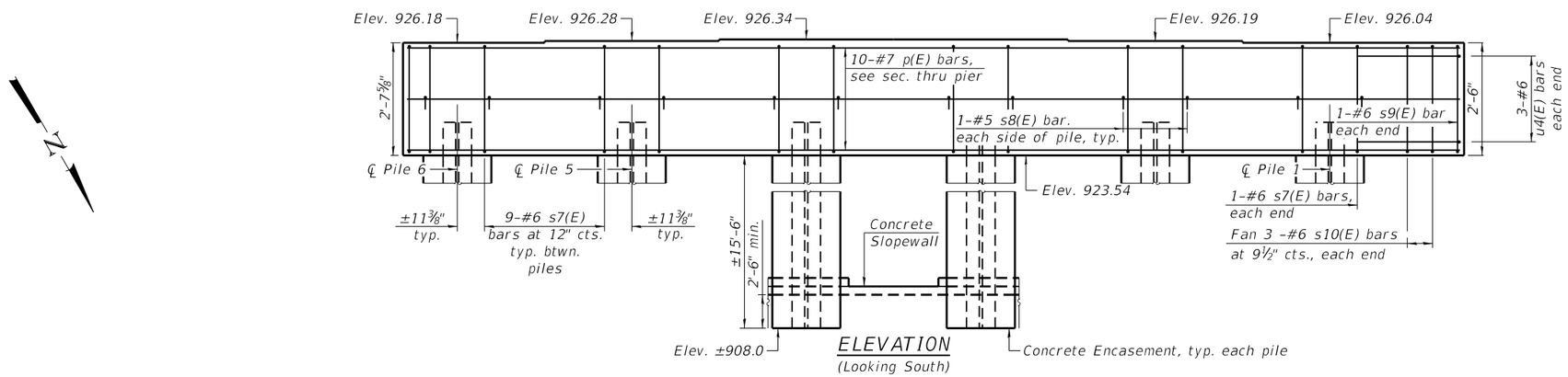

ELEVATION

(Looking South)

Notes:
Pour steps monolithically with cap.
For details of piles see sheet 24 of 35.

PILE DATA

Type: HP14X89
Nominal Required Bearing: 295 k/pile
Factored Resistance Available: 162 k/pile
Est. Length: 53'
No. Production Piles: 5
No. Test Piles: 1

BILL OF MATERIAL

Bar	No.	Size	Length	Shape
p(E)	10	#7	55'-1"	
s7(E)	47	#6	11'-0"	
s8(E)	12	#5	3'-8"	
s9(E)	2	#6	12'-6"	
s10(E)	6	#6	7'-2"	
u4(E)	6	#6	12'-0"	
Concrete Structures		Cu. Yd.	16.6	
Concrete Encasement		Cu. Yd.	16.3	
Reinforcement Bars, Epoxy Coated		Pound	2,160	
Furnishing Steel Piles, HP14X89		Foot	265	
Driving Piles		Foot	265	
Test Steel Pile, HP14X89		Each	1	

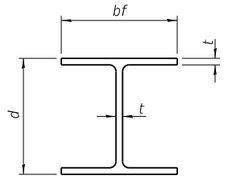

STEEL PILE TABLE

Designation	Depth d	Flange width bf	Web and Flange thickness t	Encasement diameter A
HP 14x117	14¼"	14⅞"	13/16"	30"
x102	14"	14¾"	11/16"	30"
x89	13⅞"	14¾"	⅝"	30"
x73	13⅝"	14⅝"	½"	30"
HP 12x84	12¼"	12¼"	11/16"	24"
x74	12⅛"	12¼"	⅝"	24"
x63	12"	12⅛"	½"	24"
x53	11¾"	12"	7/16"	24"
HP 10x57	10"	10¼"	9/16"	24"
x42	9¾"	10⅛"	7/16"	24"
HP 8x36	8"	8⅛"	7/16"	18"

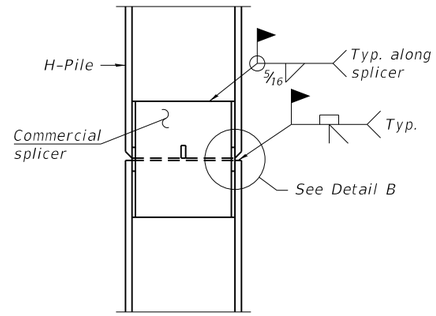

ELEVATION

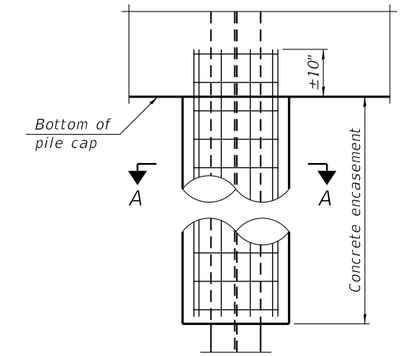

ELEVATION

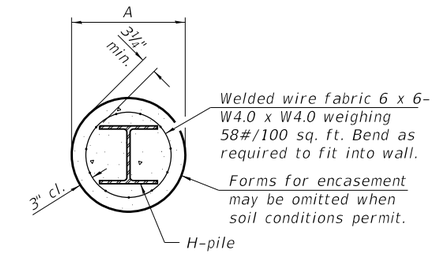

SECTION A-A

INDIVIDUAL PILE CONCRETE ENCASEMENT

(when specified)

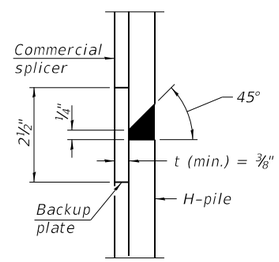

DETAIL "B"

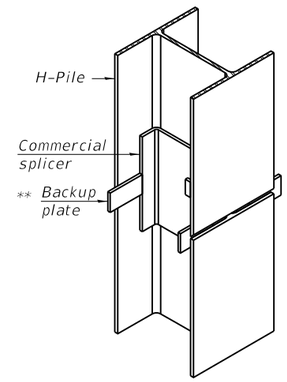

ISOMETRIC VIEW

WELDED COMMERCIAL SPLICE

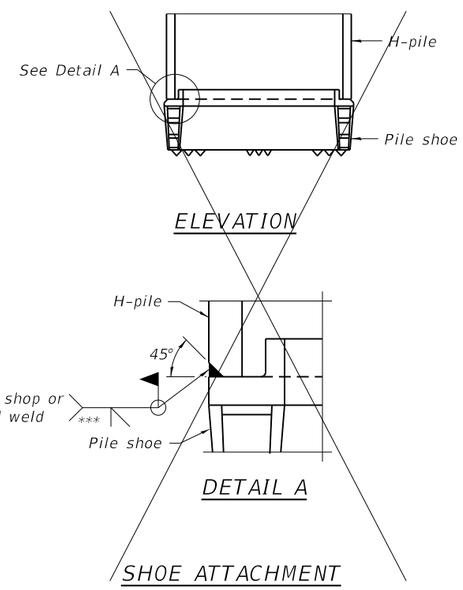

ELEVATION

DETAIL A

SHOE ATTACHMENT

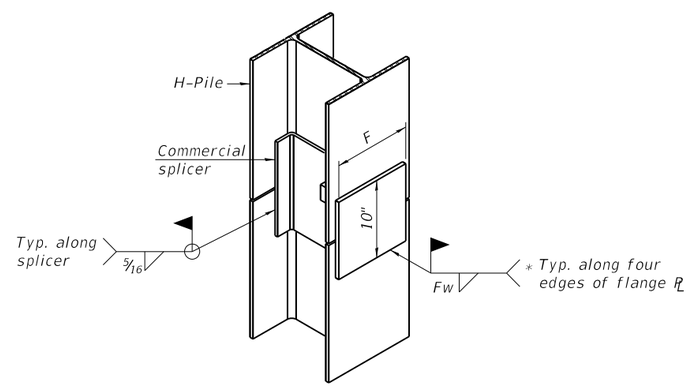

ISOMETRIC VIEW

WELDED COMMERCIAL SPLICE ALTERNATE

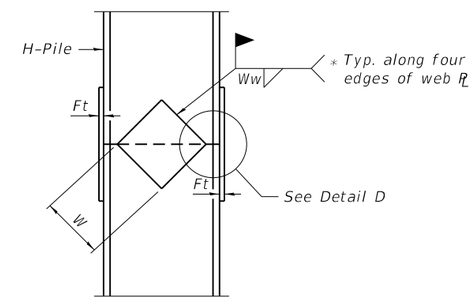

ELEVATION

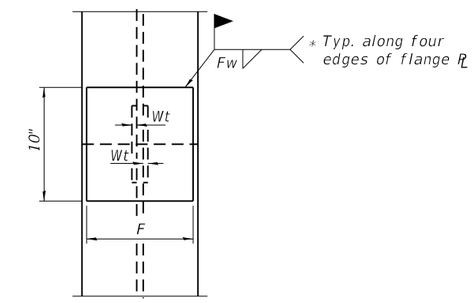

END VIEW

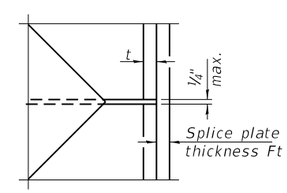

DETAIL D

Designation	F	Ft	Fw	W	Wt	Ww
HP 14x117	12½"	1"	⅞"	7¾"	⅝"	½"
x102	12½"	⅞"	¾"	7¾"	⅝"	½"
x89	12½"	¾"	11/16"	7¾"	⅝"	½"
x73	12½"	⅝"	9/16"	7¾"	⅝"	½"
HP 12x84	10"	⅞"	11/16"	6½"	⅝"	½"
x74	10"	⅞"	11/16"	6½"	⅝"	½"
x63	10"	⅝"	½"	6½"	½"	⅜"
x53	10"	⅝"	½"	6½"	½"	⅜"
HP 10x57	8"	¾"	9/16"	5¼"	½"	⅜"
x42	8"	⅝"	9/16"	5¼"	½"	⅜"
HP 8x36	7"	⅝"	7/16"	4¼"	½"	⅜"

WELDED PLATE FIELD SPLICE

Note:
The steel H-piles shall be according to AASHTO M270 Grade 50.

* Interrupt welds ¼" from end of web and/or each flange.

** Remove portions of backup plates that extend outside the flanges.

*** Weld size per pile shoe manufacturer (5/16" min.).

F-HP 5-15-2023

ROUTE NO.	SECTION	COUNTY	TOTAL SHEETS	SHEET NO.
CH. 17	87-00082 -00-BR	KANE	20	9
FED. ROAD DIST. NO. 7		ILLINOIS	PROJECT	

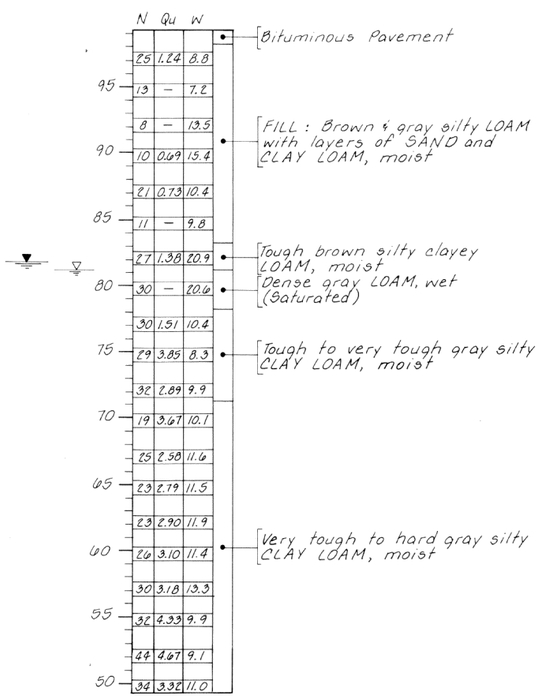

BORING NO. 1
6' Rt. Sta. 8+81

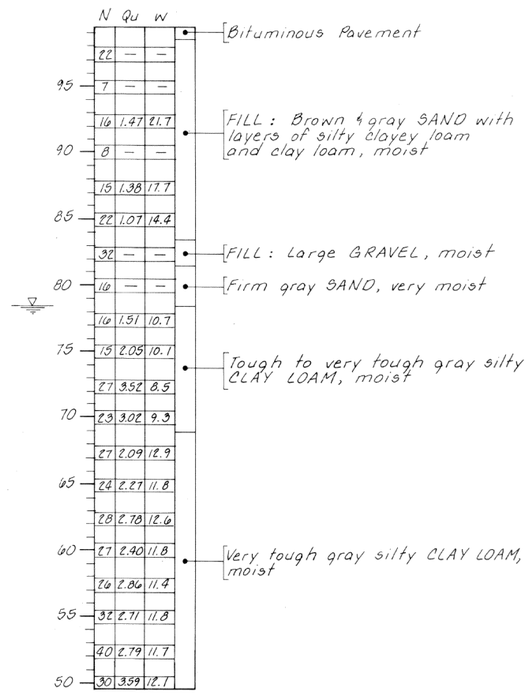

BORING NO. 2
6' Lt. Sta. 11+06

BORING DATA

N — Standard Penetration Test ~ Blows per foot to drive 2" O.D. Split Spoon Sampler 12" with 140# hammer falling 30".
Qu — Unconfined Compressive Strength ~ Tons/Sq. Ft.
W — Water Content ~ Percentage of oven dry weight ~ %
▼ — Water Table at end of boring
▽ — Water Table while drilling

BORINGS
SECTION 87-00082-00-BR
MUIRHEAD ROAD OVER
CHICAGO CENTRAL R.R.
KANE COUNTY
STATION 9+94

COLLINS AND RICE
CONSULTING ENGINEERS

DESIGNED A.R.K. CHECKED Z.B.U.
DRAWN M.G. DATE 6-17-88 NO. 2269

FILE NAME = P:\2022\220616\Cad\02 Design\CADD_Sheets\220616-sht-bridge.dgn	DESIGNED - I.P.N.	REVISED -	
HAMPTON, LENZINI AND RENWICK, INC. 3085 STEVENSON DRIVE, SUITE 201 SPRINGFIELD, ILLINOIS 62703 ILLINOIS PROFESSIONAL DESIGN FIRM LS / PE / SE CORP. 184.000959	USER NAME = Inlausen	CHECKED - S.T.M.	REVISED -
	PLOT SCALE =	DRAWN - I.P.N.	REVISED -
	PLOT DATE = 1/18/2024	CHECKED - S.T.M.	REVISED -

STATE OF ILLINOIS
DEPARTMENT OF TRANSPORTATION

EXISTING BORINGS
STRUCTURE NO. 045-9132

SHEET NO. 25 OF 35 SHEETS

T.R.	SECTION	COUNTY	TOTAL SHEETS	SHEET NO.
2110	17-12082-01-BR	KANE	84	57
MUIRHEAD ROAD / CNNN R.R.		CONTRACT NO. 61K26		
		ILLINOIS	FED. AID PROJECT NO. ZU0Q(831)	

ROUTE NO.	SECTION	COUNTY	TOTAL SHEETS	SHEET NO.
C.H. 17	87-00082-00-BR	KANE	20	8
FED. ROAD DIST. NO. 7	ILLINOIS	PROJECT		

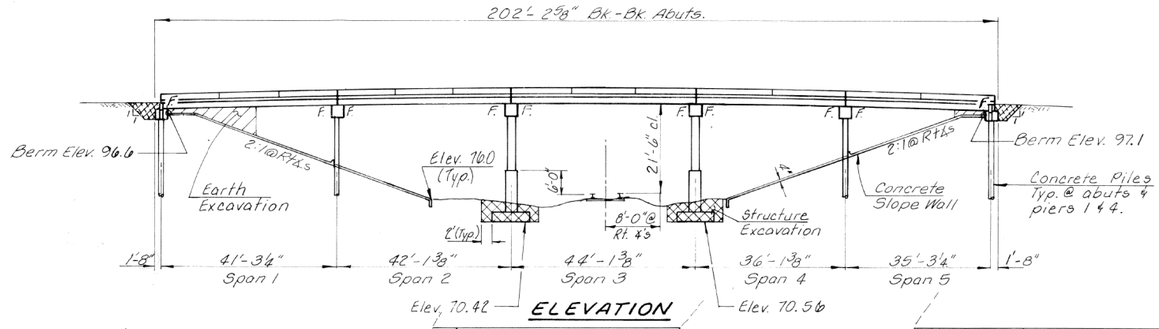

ELEVATION

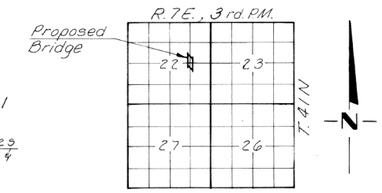

LOCATION PLAN

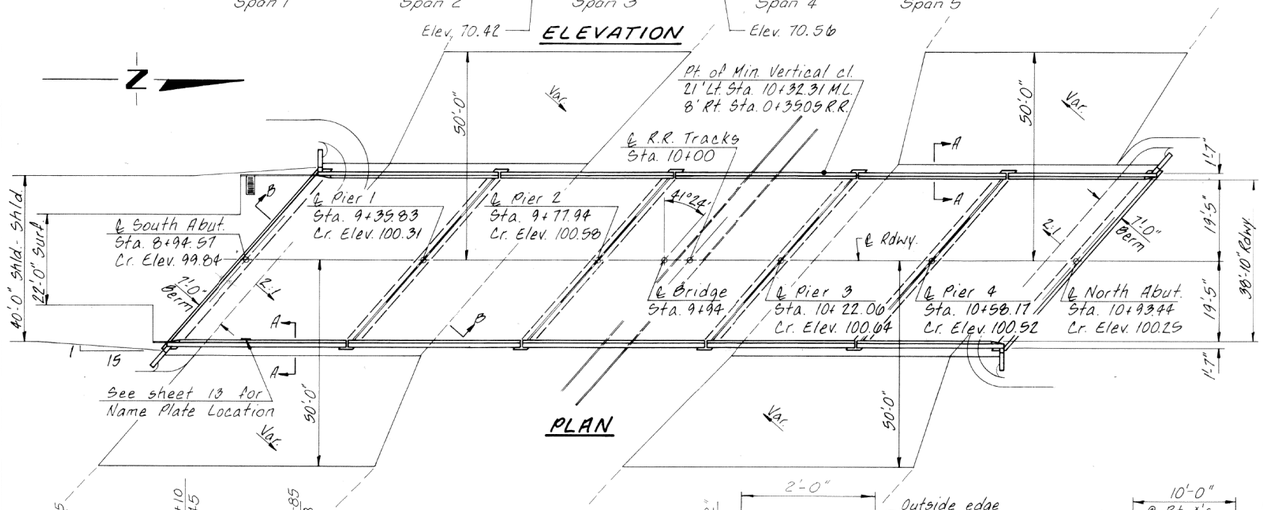

PLAN

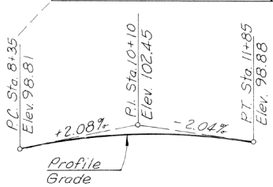

PROFILE GRADE

Note:
The slopes under the proposed bridge shall be excavated as shown with 2:1 side slopes within the limits of the proposed slopewall then taper to the existing slopes as shown, or as directed by the Engineer. Suitable excavated material to be used in the embankment.

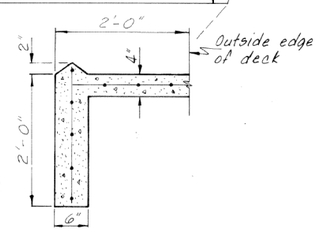

SECTION A-A

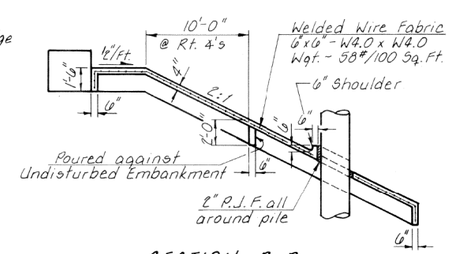

SECTION B-B

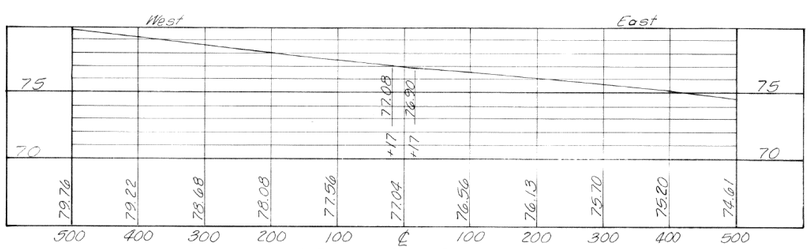

HIGH RAIL PROFILE
(North Rail)

CHICAGO CENTRAL R.R.
BUILT 198_ BY
KANE COUNTY
SEC. 87-00082-00-BR
STR. NO. 045-
LOADING HS20

LETTERING FOR NAME PLATE
See Standard 2113

GENERAL NOTES

The Contractor shall drive one concrete test pile in a permanent location at Pier 1 and at the North Abutment, as directed by the Engineer, before ordering the remainder of the piles.

TOTAL BILL OF MATERIAL

ITEM	UNIT	SUPER	SUB	TOTAL
Precast Prestressed Concrete Deck Beams (17" Depth)	Sq. Ft.	8,400		8,400
Class X Concrete	Cu. Yd.		322.4	322.4
Reinforcement Bars	Pound		39,490	39,490
Name Plates	Each	1		1
Reinforcement Bars (Epoxy Coated)	Pound	3,290		3,290
Waterproofing Membrane System	Sq. Yd.	863		863
Portland Cement Mortar Fairing Course	Lin. Ft.	650		650
Leveling Binder (Machine Method)	Ton	18		18
Bit. Conc. Surf. Crse., Mix. C; Cl. I	Ton	72		72
Slopewall 4"	Sq. Yd.		680	680
Concrete Piles	Lin. Ft.		994	994
Test Pile Concrete	Each		2	2
Structure Excavation	Cu. Yd.		347	347
Class X Concrete Superstructure	Cu. Yd.	45.1		45.1
Protective Coat	Sq. Yd.	164		164

DESIGN STRESSES

f'_c = 5,000 p.s.i. (Prestressed Beams)
f'_{ci} = 4,000 p.s.i. (Spans 1, 2, 4 & 5 ~ Prestr. Bms.)
f'_{ci} = 4,900 p.s.i. (Span 3 ~ Prestr. Bms.)
f'_c = 1,400 p.s.i. (Class X Concrete)
f'_s = 270,000 p.s.i. (Prestressed Strands)
f_{si} = 189,000 p.s.i. (Prestressed Strands)
f_s = 20,000 p.s.i. (Reinf. Bars ~ Field Units)
f_y = 60,000 p.s.i. (Reinf. Bars ~ Precast Units)
n = 9 (Class X Concrete)
LOADING HS20-44
Design Specifications: A.A.S.H.T.O. 1983 & 1984 to 1987 Interims.
25#/Sq. Ft. included in dead load for future wearing surface.

I certify that to the best of my knowledge, information and belief, this bridge design is structurally adequate for the design loading shown on the plans. The design is an economical one for the style of structure and complies with requirements of the current "AASHTO Standard Specifications for Highway Bridges".

Fred J. Stone Jr.
ILLINOIS STRUCTURAL NO. 2934

FRED J. STONE JR. 2934 REGISTERED STRUCTURAL ENGINEER OF ILLINOIS

GENERAL PLAN & ELEVATION
SECTION 87-00082-00-BR
MUIRHEAD ROAD OVER
CHICAGO CENTRAL R.R.
KANE COUNTY
STATION 9+94

COLLINS AND RICE
CONSULTING ENGINEERS

DESIGNED A.R.K. CHECKED Z.B.U.
DRAWN M.G. DATE 6-17-88 NO. 2269

FILE NAME = P:\2022\220616\Cad\02 Design\CADD_Sheets\220616-sht-bridge.dgn

HAMPTON, LENZINI AND RENWICK, INC.
3365 STEVENSON DRIVE, SUITE 201
SPRINGFIELD, ILLINOIS 62703
ILLINOIS PROFESSIONAL DESIGN FIRM
LS / PE / SE CORP. 184.000959

USER NAME = lnlausen
PLOT SCALE =
PLOT DATE = 1/18/2024

DESIGNED - I.P.N. REVISED -
CHECKED - S.T.M. REVISED -
DRAWN - I.P.N. REVISED -
CHECKED - S.T.M. REVISED -

STATE OF ILLINOIS
DEPARTMENT OF TRANSPORTATION

EXISTING PLANS
STRUCTURE NO. 045-9132
SHEET NO. 26 OF 35 SHEETS

T.R.	SECTION	COUNTY	TOTAL SHEETS	SHEET NO.
2110	17-12082-01-BR	KANE	84	58
MUIRHEAD ROAD / CNNN R.R.		CONTRACT NO. 61K26		
		ILLINOIS	FED. AID PROJECT NO. ZU0Q(831)	

ROUTE NO.	SECTION	COUNTY	TOTAL SHEETS	SHEET NO.
C.H. 17	87-00082-00-BR	KANE	20	10
FED. ROAD DIST. NO. 7		ILLINOIS	PROJECT	

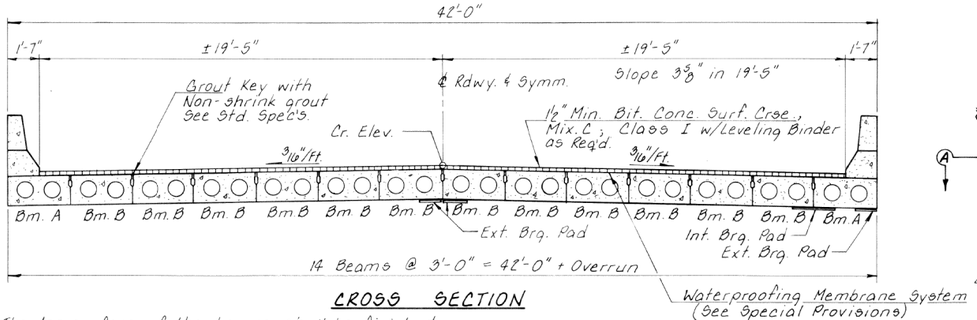

CROSS SECTION

Note: The top surface of the beams shall be finished in accordance with Art. 505.06 of the Standard Specifications except that the surface shall not be roughened by brooming. The finished surface shall be free of depressions or high spots with sharp corners, and the edge of keys shall be rounded or chamfered a minimum of 1/2".

Note: A Calcium Nitrite Corrosion Inhibitor, as covered in the Special Provisions, shall be used in the concrete for precast prestressed concrete deck beams.

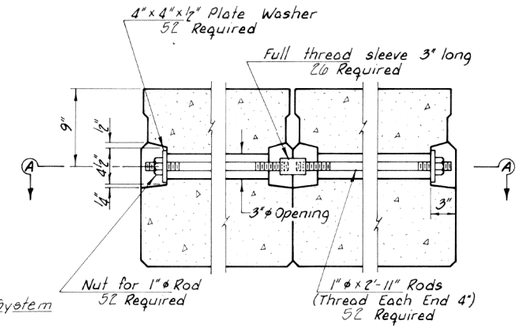

TRANSVERSE TIE ROD DETAIL

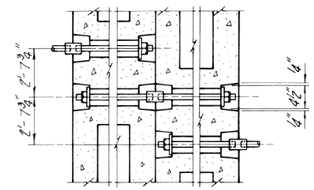

SECTION A-A

Note: Omit key on exterior face of outside beams.

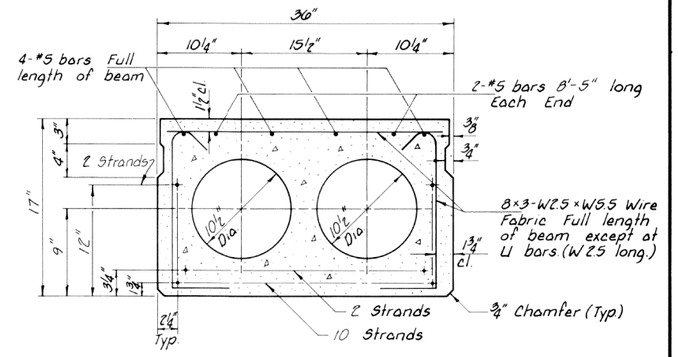

TYPICAL SECTION THRU BEAM

14 - 1/2" ϕ Strands Stressed to 28,900 Lbs. Each. Place strands symmetrically about ℄ of beam. Use Standard Grid Pattern.

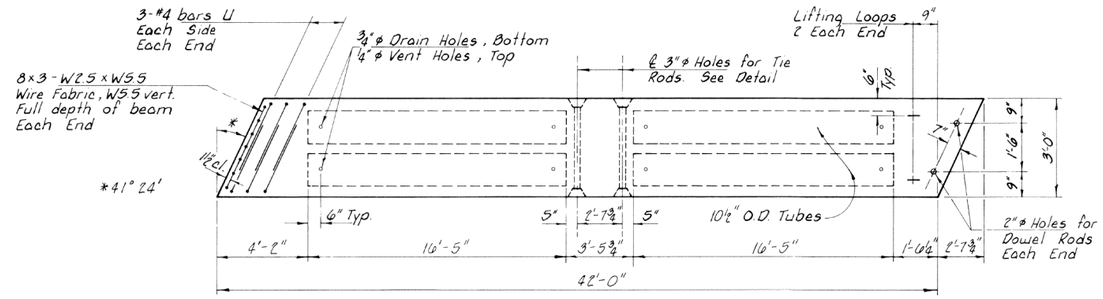

TYPICAL PLAN OF BEAMS

NOTES

Required Release Strength, f'_{ci}, shall be 4,000 p.s.i.

Prestressing steel shall be non-galvanized high strength, stress-relieved 7-wire strand, Grade 270.

The nominal diameter shall be 1/2" and the nominal cross-sectional area shall be 0.153 sq. in.

Lifting Loops shall be 7-wire stress relieved, 2-1/2" ϕ - 270 ksi strands.

The 1" ϕ rods in the transverse tie assembly shall be tightened to a snug fit & the threads set. Pockets that receive tie rods on outside shall be filled with grout after ties are in place.

Reinforcement bars shall conform to AASHTO: M-31 or M-53, Grade 60.

The bearing seat surfaces shall be adjusted by shimming to assure firm and even bearing. Two 1/8" fabric adjusting shims of the dimensions of the Exterior Bearing Pad shall be provided for each bearing.

Keyway surfaces shall be cleaned to remove form oil and other bond breaking material prior to shipment of the beams. Cleaning shall be done by sandblasting the keyway areas between top of the beam and bottom edge of the key.

An equal substitution of the low-relaxation strands for the stress-relieved strands will be permitted.

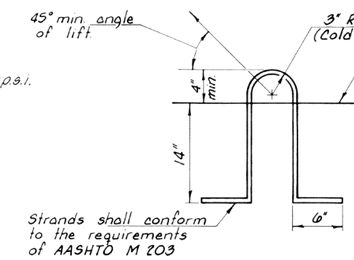

NOTE: The loop shall be formed in a manner such that all strands are engaged during lifting. Loops shall be burned off after beams have been erected.

LIFTING LOOP DETAIL

Approved alternate may be substituted for the above.

BILL OF MATERIAL

ITEM	UNIT	QUANTITY
Precast Prestressed Concrete Deck Beams (17" Depth)	Sq. Ft.	3,528
P.C. Mortar Fairing Course	Lin. Ft.	273
Waterproofing Membrane System	Sq. Yd.	362
Leveling Binder (Machine Method)	Ton	8
Bit. Conc. Surf. Crse., Mix. C, Cl. I	Ton	30

Bars d(E), d_1(E) & d_2(E) to be placed before Beam A is poured. See sheet 13 for bar spacing.

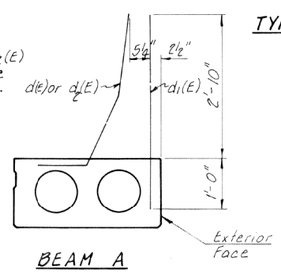

BEAM A

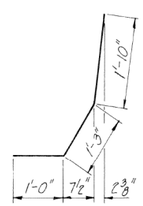

BAR d(E)

16 Req'd.

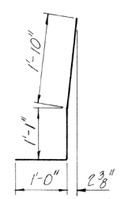

BAR d_2(E)

8 Req'd.

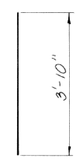

BAR d_1(E)

16 Req'd.

Note: Reinforcement bars designated (E) shall be epoxy coated.

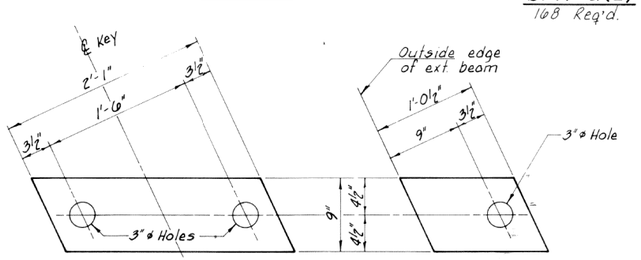

INTERIOR (48 Req'd.)

EXTERIOR (16 Req'd.)

BEARING PAD DETAILS

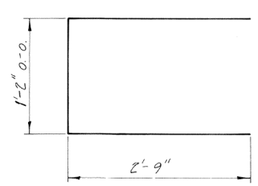

BAR U

Note: See sheet 12 for Sections at abuts. and piers.

SUPERSTRUCTURE ~ SPANS 1 & 2
SECTION 87-00082-00-BR
MUIRHEAD ROAD OVER
CHICAGO CENTRAL R.R.
KANE COUNTY
STATION 9+94

COLLINS AND RICE
CONSULTING ENGINEERS

DESIGNED A.R.K. CHECKED Z.B.U.
DRAWN M.G. DATE 6-17-88 NO. 2269

FILE NAME = P:\2022\220616\Cad\02 Design\CADD_Sheets\220616-sht-bridge.dgn	DESIGNED - I.P.N.	REVISED -
HAMPTON, LENZINI AND RENWICK, INC. 3085 STEVENSON DRIVE, SUITE 201 SPRINGFIELD, ILLINOIS 62703 — USER NAME = Inlausen	CHECKED - S.T.M.	REVISED -
ILLINOIS PROFESSIONAL DESIGN FIRM LS / PE / SE CORP. 184.000959 — PLOT SCALE =	DRAWN - I.P.N.	REVISED -
PLOT DATE = 1/18/2024	CHECKED - S.T.M.	REVISED -

STATE OF ILLINOIS
DEPARTMENT OF TRANSPORTATION

EXISTING PLANS
STRUCTURE NO. 045-9132

SHEET NO. 27 OF 35 SHEETS

T.R.	SECTION	COUNTY	TOTAL SHEETS	SHEET NO.
2110	17-12082-01-BR	KANE	84	59
MUIRHEAD ROAD / CNNN R.R.		CONTRACT NO. 61K26		
		ILLINOIS	FED. AID PROJECT NO. ZU0Q(831)	

ROUTE NO.	SECTION	COUNTY	TOTAL SHEETS	SHEET NO.
C.H. 17	87-00082-00-BR	KANE	20	11
FED. ROAD DIST. NO. 7	ILLINOIS	PROJECT		

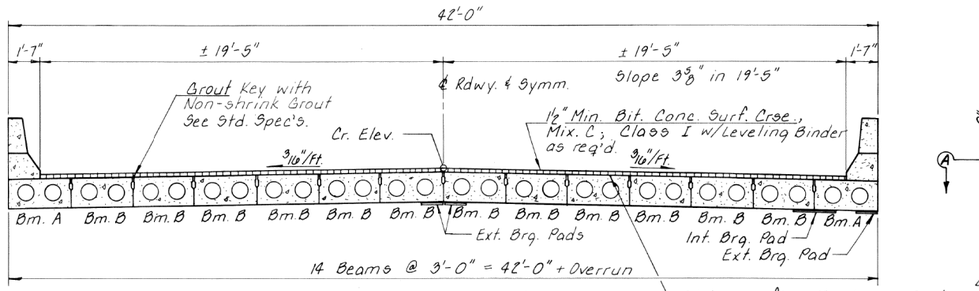

CROSS SECTION

Note: The top surface of the beams shall be finished in accordance with Art. 505.06 of the Standard Specifications except that the surface shall not be roughened by brooming. The finished surface shall be free of depressions or high spots with sharp corners, and the edge of keys shall be rounded or chamfered a minimum of ¼".

Note: A Calcium Nitrite Corrosion Inhibitor, as covered in the Special Provisions, shall be used in the concrete for precast prestressed concrete deck beams.

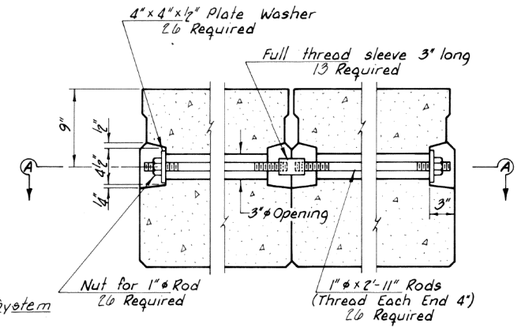

TRANSVERSE TIE ROD DETAIL

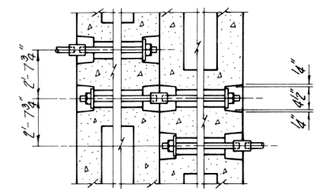

SECTION A-A

Note: Omit key on exterior face of outside beams.

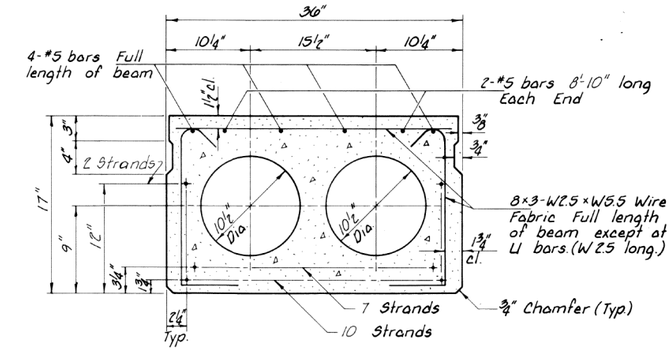

TYPICAL SECTION THRU BEAM

19 - ½" ϕ Strands Stressed to 28,900 Lbs. Each. Place strands symmetrically about ℄ of beam. Use Standard Grid Pattern.

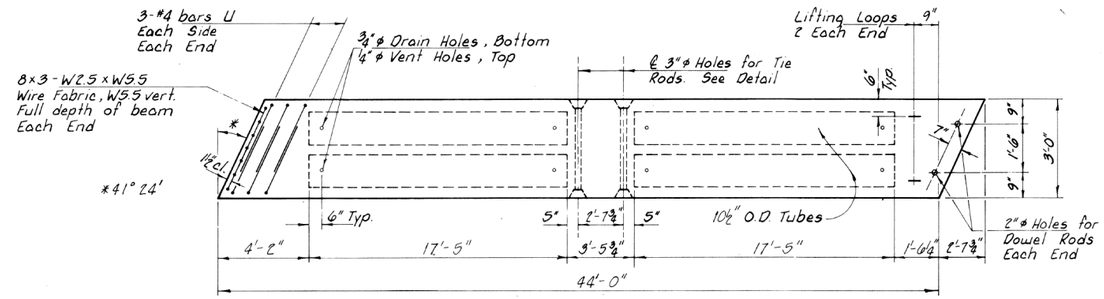

TYPICAL PLAN OF BEAMS

Bars d(E) & d1(E) to be placed before Beam A is poured. See sheet 13 for bar spacing.

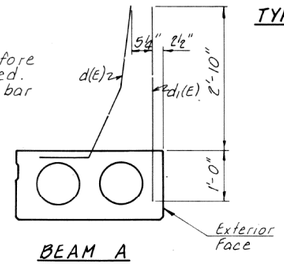

BEAM A

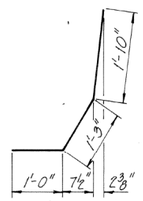

BAR d(E)

96 Req'd.

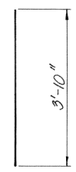

BAR d1(E)

88 Req'd.

Note: Reinforcement bars designated (E) shall be epoxy coated.

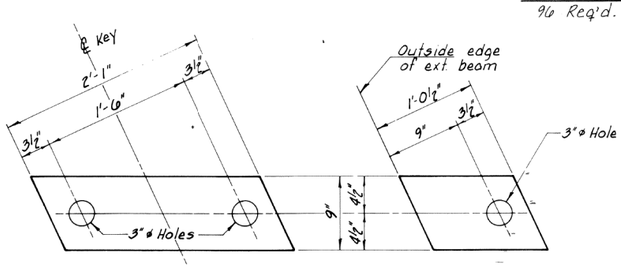

INTERIOR

(24 Req'd.)

EXTERIOR

(8 Req'd.)

BEARING PAD DETAILS

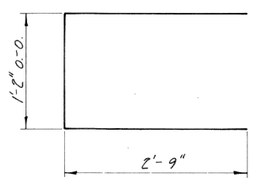

BAR U

NOTES

Required Release Strength, f'_{ci}, shall be 4,900 p.s.i.

Prestressing steel shall be non-galvanized high strength, stress-relieved 7-wire strand, Grade 270.

The nominal diameter shall be ½" and the nominal cross-sectional area shall be 0.153 sq. in.

Lifting Loops shall be 7-wire stress relieved, 2-½" ϕ - 270 ksi strands.

The 1" ϕ rods in the transverse tie assembly shall be tightened to a snug fit & the threads set. Pockets that receive tie rods on outside shall be filled with grout after ties are in place.

Reinforcement bars shall conform to AASHTO: M-31 or M-53, Grade 60.

The bearing seat surfaces shall be adjusted by shimming to assure firm and even bearing. Two ⅛" fabric adjusting shims of the dimensions of the Exterior Bearing Pad shall be provided for each bearing.

Keyway surfaces shall be cleaned to remove form oil and other bond breaking material prior to shipment of the beams. Cleaning shall be done by sandblasting the keyway areas between top of the beam and bottom edge of the key.

An equal substitution of the low-relaxation strands for the stress-relieved strands will be permitted.

Note: See sheet 12 for section at piers.

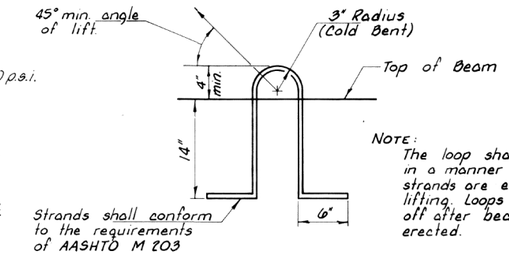

Note: The loop shall be formed in a manner such that all strands are engaged during lifting. Loops shall be burned off after beams have been erected.

LIFTING LOOP DETAIL

Approved alternate may be substituted for the above.

BILL OF MATERIAL

Item	Unit	Quantity
Precast Prestressed Concrete Deck Beams (17" Depth)	Sq. Ft.	1,848
P.C. Mortar Fairing Course	Lin. Ft.	143
Waterproofing Membrane System	Sq. Yd.	190
Leveling Binder (Machine Method)	Ton	6
Bit. Conc. Surf. Crse., Mix. C; Cl. I	Ton	16

SUPERSTRUCTURE ~ SPAN 3
SECTION 87-00082-00-BR
MUIRHEAD ROAD OVER
CHICAGO CENTRAL R.R.
KANE COUNTY
STATION 9+94

COLLINS AND RICE
CONSULTING ENGINEERS

DESIGNED A.R.K. CHECKED Z.B.U.
DRAWN M.G. DATE 6-17-88 NO. 2269

ROUTE NO	SECTION	COUNTY	TOTAL SHEETS	SHEET NO
C.H. 17	87-00082-00-BR	KANE	20	12
FED. ROAD DIST. NO. 7	ILLINOIS	PROJECT		

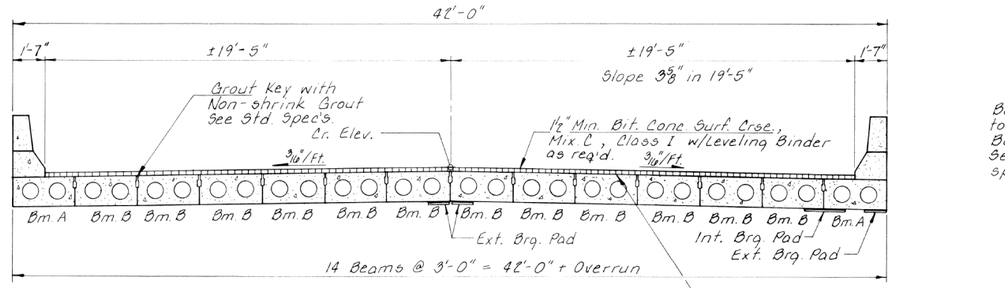

CROSS SECTION

Note: The top surface of the beams shall be finished in accordance with Article 505.06 of the Standard Specifications except that the surface shall not be roughened by brooming. The finished surface shall be free of depressions or high spots with sharp corners, and the top edge of keys shall be rounded or chamfered a minimum of 1/4".

Note: A Calcium Nitrite Corrosion Inhibitor, as covered in the Special Provisions, shall be used in the concrete for precast prestressed concrete deck beams.

Note: Omit key on exterior face of outside beams.

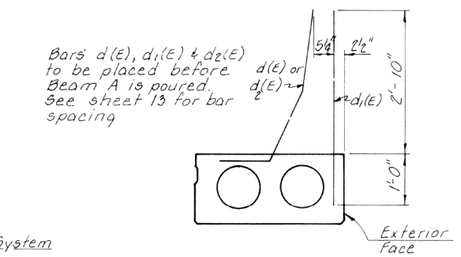

BEAM A

Note: Reinforcement bars designated (E) shall be epoxy coated.

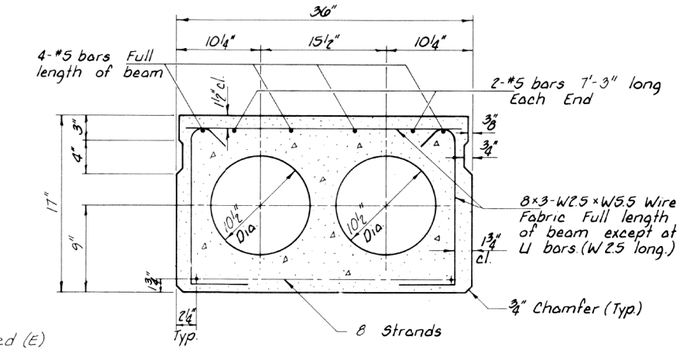

TYPICAL SECTION THRU BEAM

8 - 1/2"ϕ Strands Stressed to 28,900 Lbs. Each. Place strands symmetrically about ℄ of beam. Use Standard Grid Pattern.

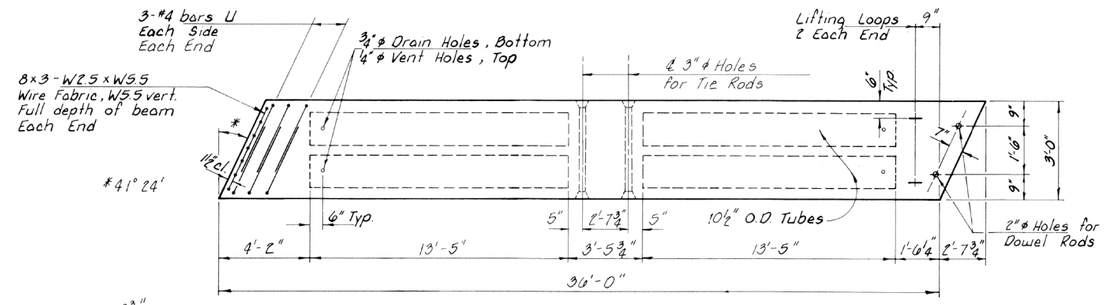

TYPICAL PLAN OF BEAMS

Note: See sheet 10 for Transverse Tie Details.

NOTES

Prestressing steel shall be non-galvanized high strength, stress-relieved 7-wire strand, Grade 270.

The nominal diameter shall be 1/2" and the nominal cross-sectional area shall be 0.153 sq. in.

Lifting Loops shall be 7-wire stress relieved, 2-1/2"ϕ-270 ksi strands.

Reinforcement bars shall conform to AASHTO: M-31 or M-53, Grade 60.

The bearing seat surfaces shall be adjusted by shimming to assure firm & even bearing. Two 1/8" fabric adjusting shims of the dimensions of the Exterior Bearing Pad shall be provided for each bearing.

Keyway surfaces shall be cleaned to remove form oil and other bond breaking material prior to shipment of the beams. Cleaning shall be done by sand blasting the keyway areas between top of the beam and the bottom edge of the key.

Required Release Strength, f'_{ci}, shall be 4,000 p.s.i.

An equal substitution of the low relaxation strands for the stress-relieved strands will be permitted.

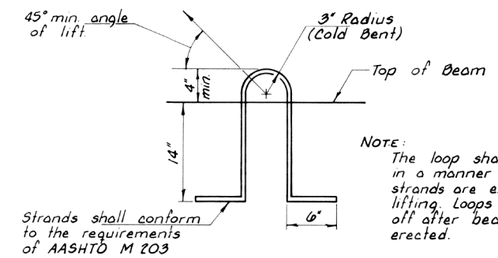

Note: The loop shall be formed in a manner such that all strands are engaged during lifting. Loops shall be burned off after beams have been erected.

LIFTING LOOP DETAIL

Approved alternate may be substituted for the above.

BILL OF MATERIAL

ITEM	UNIT	QUANTITY
Precast Prestressed Concrete Deck Beams (17" Depth)	Sq. Ft.	3,024
P.C. Mortar Fairing Course	Lin. Ft.	234
Waterproofing Membrane System	Sq. Yd.	311
Leveling Binder (Machine Method)	Ton	4
Bit. Conc. Surf. Crse., Mix. C, Cl. I	Ton	26

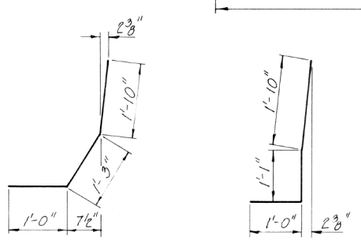

BAR d(E)

148 Req'd.

BAR d2(E)

6 Req'd.

BAR d1(E)

144 Req'd.

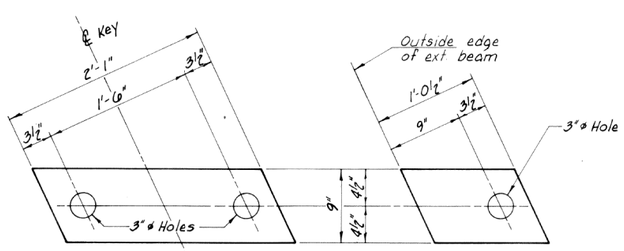

INTERIOR

(48 Req'd.)

EXTERIOR

(16 Req'd.)

BEARING PAD DETAILS

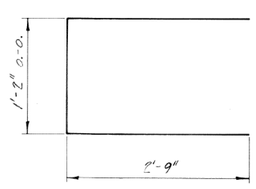

BAR U & U1

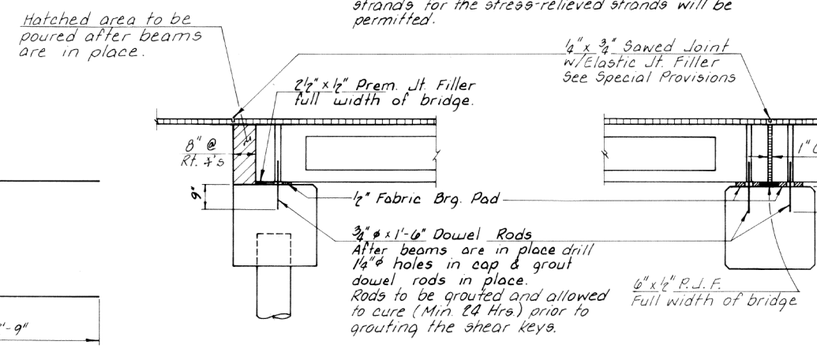

SECTION AT ABUTMENTS

SECTION AT PIERS

SUPERSTRUCTURE, SPANS 4 & 5
SECTION 87-00082-00-BR
MUIRHEAD ROAD OVER
CHICAGO CENTRAL R.R.
KANE COUNTY
STATION 9+94

COLLINS AND RICE
CONSULTING ENGINEERS

DESIGNED A.R.K. CHECKED Z.B.U.
DRAWN M.G. DATE 6-17-88 NO. 2269

FILE NAME = P:\2022\220616\Cad\02 Design\CADD_Sheets\220616-sht-bridge.dgn	DESIGNED - I.P.N.	REVISED -
USER NAME = Inlausen	CHECKED - S.T.M.	REVISED -
PLOT SCALE =	DRAWN - I.P.N.	REVISED -
PLOT DATE = 1/18/2024	CHECKED - S.T.M.	REVISED -

HAMPTON, LENZINI AND RENWICK, INC.
3085 STEVENSON DRIVE, SUITE 201
SPRINGFIELD, ILLINOIS 62703
ILLINOIS PROFESSIONAL DESIGN FIRM
LS / PE / SE CORP. 184.000959

STATE OF ILLINOIS
DEPARTMENT OF TRANSPORTATION

EXISTING PLANS
STRUCTURE NO. 045-9132

SHEET NO. 29 OF 35 SHEETS

T.R.	SECTION	COUNTY	TOTAL SHEETS	SHEET NO.
2110	17-12082-01-BR	KANE	84	61
MUIRHEAD ROAD / CNNN R.R.		CONTRACT NO. 61K26		
		ILLINOIS	FED. AID PROJECT NO. ZU0Q(831)	

ROUTE NO.	SECTION	COUNTY	TOTAL SHEETS	SHEET NO.
C.H. 17	87-00082-00-BR	KANE	20	14
FED. ROAD DIST. NO. 7	ILLINOIS	PROJECT		

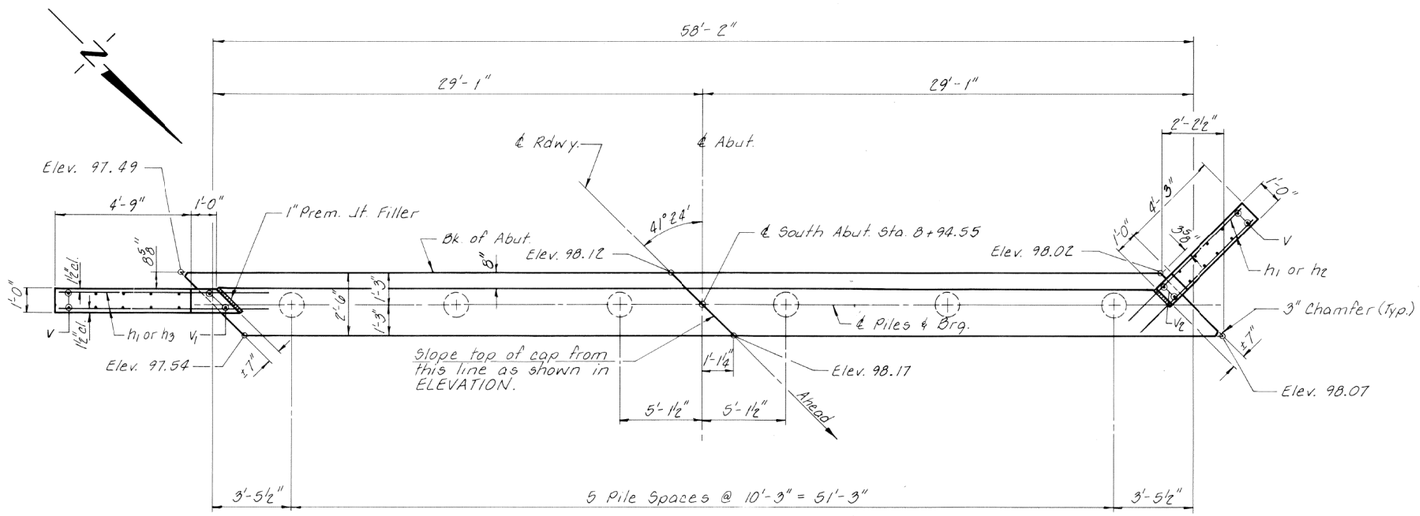

Note: Elevations given in PLAN are to top of cap.

PLAN

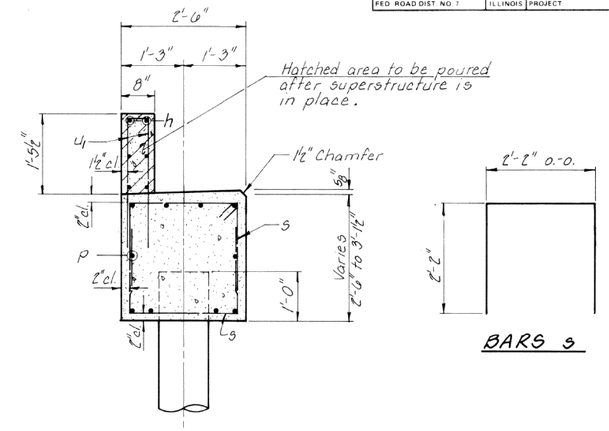

SECTION A-A
(LOOKING WEST)

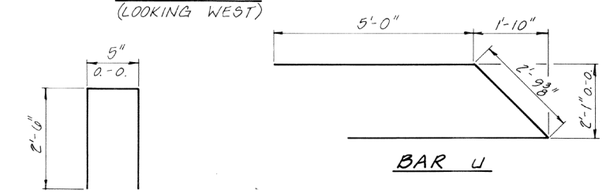

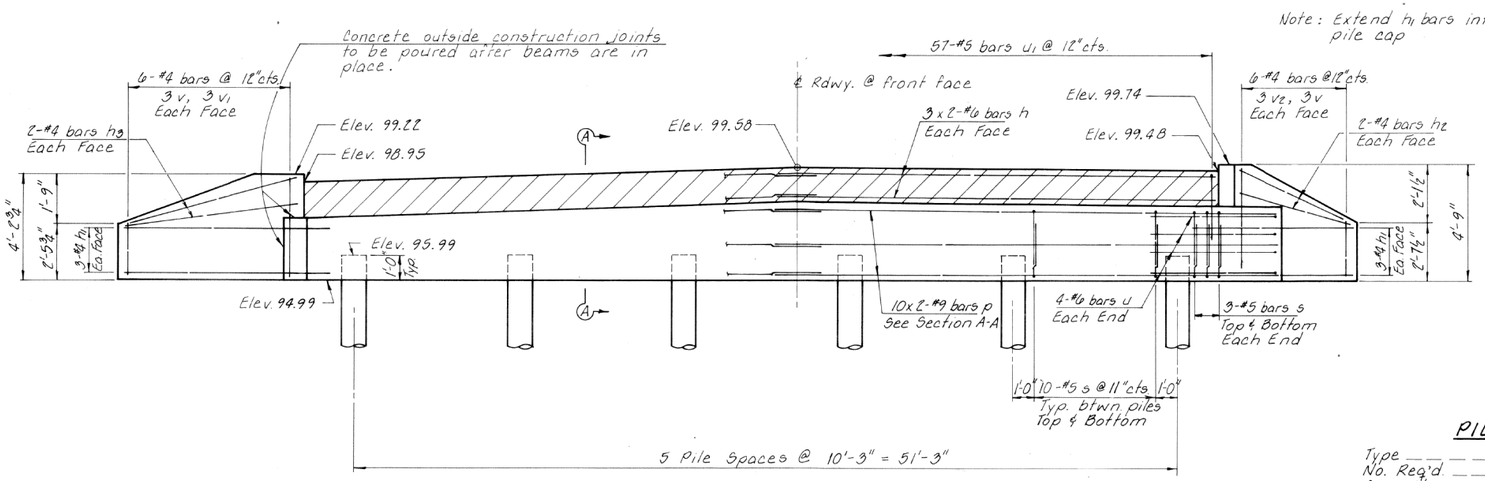

ELEVATION
(LOOKING SOUTH)

Note: Bars indicated thus 10x2-#9 etc. indicates 10 lines of bars with 2 lengths per line.

MIN. BAR LAPS

#6 ____ 1'-5"
#9 ____ 4'-4".

BILL OF MATERIAL - SOUTH ABUT.

BAR	NO.	SIZE	LENGTH	SHAPE
h	12	#6	29'-3"	
h1	12	#4	6'-9"	
h2	4	#4	5'-0"	
h3	4	#4	5'-6"	
p	20	#9	31'-1"	
s	112	#5	6'-6"	⊓
u	8	#6	12'-10"	
u1	57	#5	5'-5"	⊓
v	12	#4	2'-5"	
v1	6	#4	3'-5"	
v2	6	#4	3'-11"	
Class X Concrete			Cu. Yd.	19.4
Reinforcement Bars			Pound	4,010
Concrete Piles			Lin. Ft.	252
Structure Excavation			Cu. Yd.	40

See sheet 20 for pile alternates.

PILE DATA

Type _____ Concrete
No. Req'd _____ 6
Capacity _____ 36 Tons/Pile
Est. Length _____ 42 Feet/Pile

SOUTH ABUTMENT
SECTION 87-00082-00-BR
MUIRHEAD ROAD OVER
CHICAGO CENTRAL R.R.
KANE COUNTY
STATION 9+94

COLLINS AND RICE
CONSULTING ENGINEERS

DESIGNED A.R.K. CHECKED Z.B.U.
DRAWN M.G. DATE 6-17-88 NO. 2269

ROUTE NO.	SECTION	COUNTY	TOTAL SHEETS	SHEET NO.
C.H. 17	87-00082-00-BR	KANE	20	15
FED. ROAD DIST. NO. 7		ILLINOIS	PROJECT	

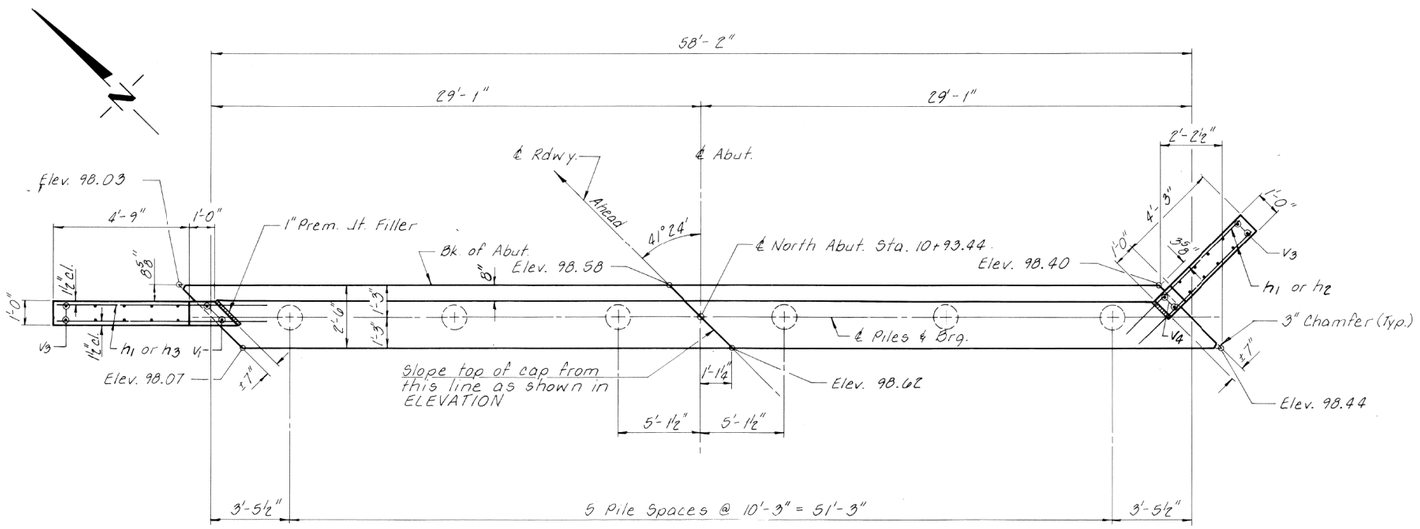

Note: Elevations given in PLAN are to top of cap.

PLAN

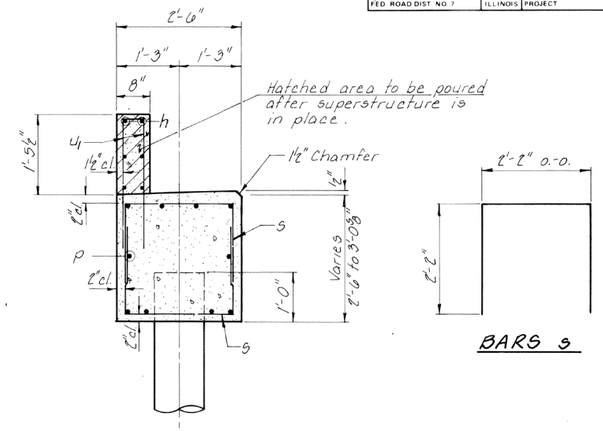

SECTION A-A
(LOOKING EAST)

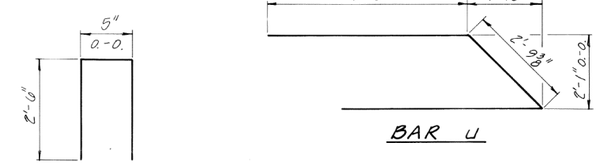

BAR u1

BAR u

Note: Extend h1 bars into pile cap.

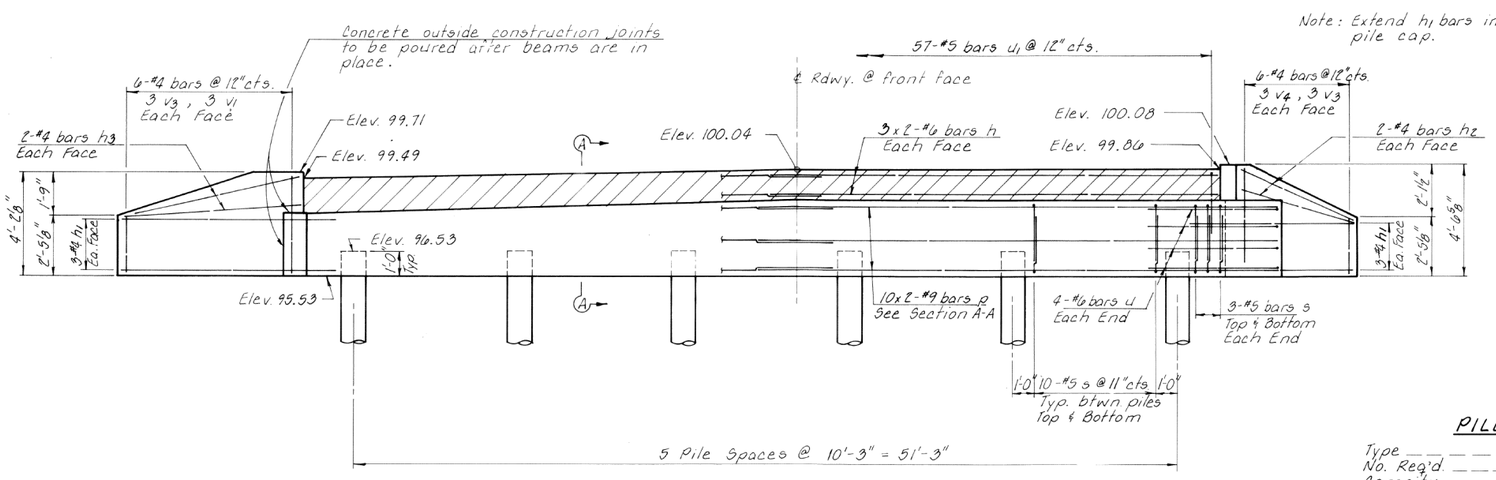

ELEVATION
(LOOKING NORTH)

Note: Bars indicated thus 10 x 2-#9 etc. indicates 10 lines of bars with 2 lengths per line.

MIN. BAR LAPS

#6 ____ 1'-5"
#9 ____ 4'-4"

BILL OF MATERIAL ~ NORTH ABUT.

BAR	NO.	SIZE	LENGTH	SHAPE
h	12	#6	29'-3"	———
h1	12	#4	6'-9"	———
h2	4	#4	5'-0"	———
h3	4	#4	5'-6"	———
p	20	#9	31'-1"	———
s	112	#5	6'-6"	⊓
u	8	#6	12'-10"	⊿
u1	57	#5	5'-5"	⊓
v1	6	#4	3'-5"	———
v3	12	#4	2'-3"	———
v4	6	#4	3'-9"	———
Class X Concrete			Cu. Yd.	18.9
Reinforcement Bars			Pound	4,010
Concrete Piles			Lin. Ft.	135
Test Pile Concrete			Each	1
Structure Excavation			Cu. Yd.	40

See sheet 20 for pile alternates.

PILE DATA

Type _____ Concrete
No. Req'd. _____ 6*
Capacity _____ 33 Tons/Pile
Est. Length _____ 27 Feet/Pile

*Includes one concrete test pile to be driven in a permanent location.

NORTH ABUTMENT
SECTION 87-00082-00-BR
MUIRHEAD ROAD OVER
CHICAGO CENTRAL R.R.
KANE COUNTY
STATION 9+94

COLLINS AND RICE
CONSULTING ENGINEERS

DESIGNED A.R.K. CHECKED Z.B.U.
DRAWN M.G. DATE 6-17-08 NO. 2269

T.R.	SECTION	COUNTY	TOTAL SHEETS	SHEET NO.
2110	17-12082-01-BR	KANE	84	63
MUIRHEAD ROAD / CNNN R.R.		CONTRACT NO. 61K26		
		ILLINOIS	FED. AID PROJECT NO. ZU0Q(831)	

ROUTE NO.	SECTION	COUNTY	TOTAL SHEETS	SHEET NO.
C.H. 17	87-00082-00-BR	KANE	20	16
FED. ROAD DIST. NO. 7		ILLINOIS	PROJECT	

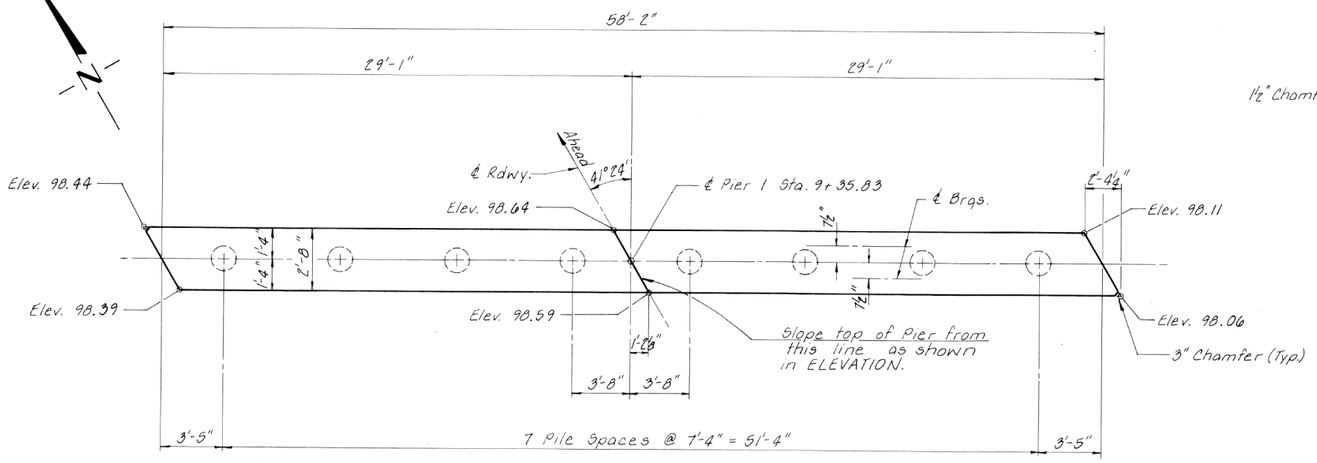

PLAN

Note: Elevations shown in PLAN are to top of cap. Bars indicated thus 3x2-#8 etc. indicates 3 lines of bars with 2 lengths per line.

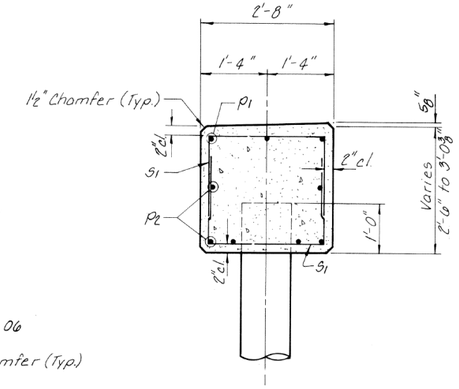

SECTION A-A
(LOOKING WEST)

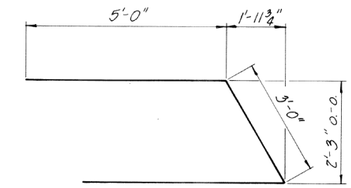

BAR U2

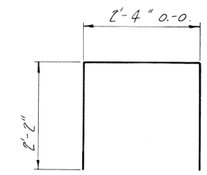

BAR S1

MIN. BAR LAPS
#7 ____ 1'-11"
#8 ____ 3'-5"

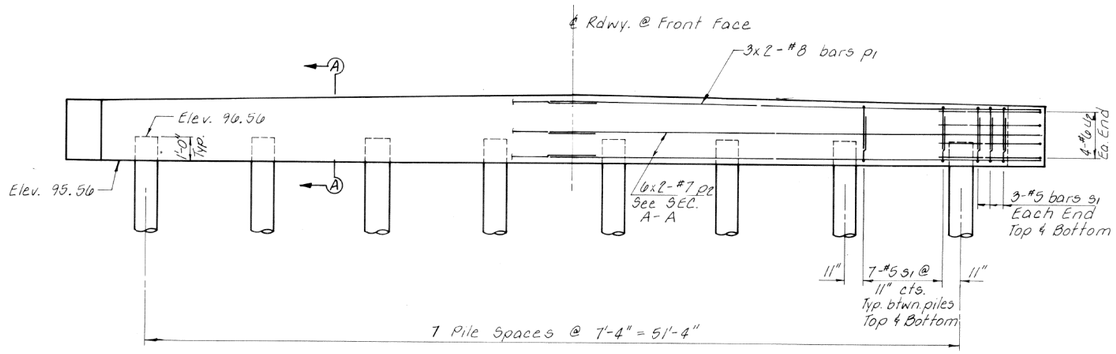

ELEVATION
(LOOKING NORTH)

PILE DATA

Type ____ Concrete
No. Req'd. ____ 8*
Capacity ____ 41 Tons/Pile
Est. Length ____ 41 Feet/Pile
*Includes one concrete test pile to be driven in a permanent location.

BILL OF MATERIAL - PIER 1

BAR	NO.	SIZE	LENGTH	SHAPE
P1	6	#8	30'-8"	
P2	12	#7	29'-11"	
S1	110	#5	6'-8"	
U2	8	#6	13'-0"	
Class X Concrete			Cu. Yd	16.3
Reinforcement Bars			Pound	2,150
Concrete Piles			Lin. Ft.	287
Test Pile Concrete			Each	1

See sheet 20 for pile alternates.

PIER 1
SECTION 87-00082-00-BR
MUIRHEAD ROAD OVER
CHICAGO CENTRAL R.R.
KANE COUNTY
STATION 9+94

COLLINS AND RICE
CONSULTING ENGINEERS

DESIGNED A.R.K. CHECKED Z.B.U.
DRAWN M.G. DATE 6-17-88 NO. 2269

ROUTE NO.	SECTION	COUNTY	TOTAL SHEETS	SHEET NO.
C.H. 17	87-0008Z-00-BR	KANE	20	17
FED. ROAD DIST. NO. 7		ILLINOIS	PROJECT	

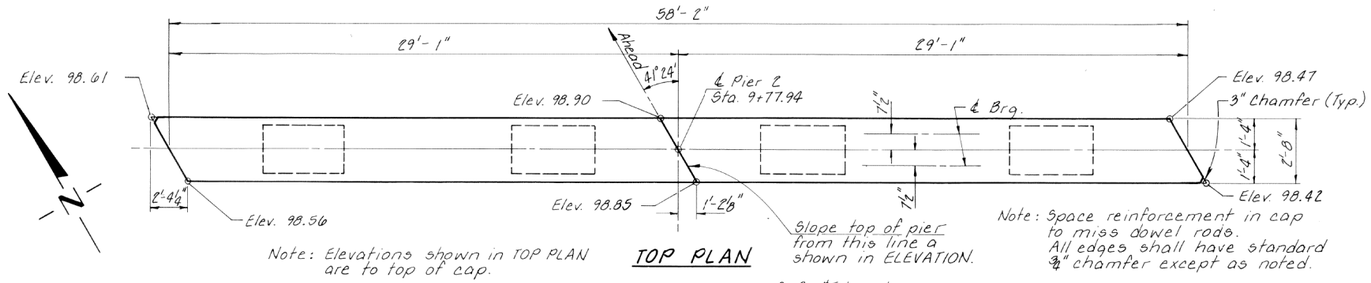

TOP PLAN

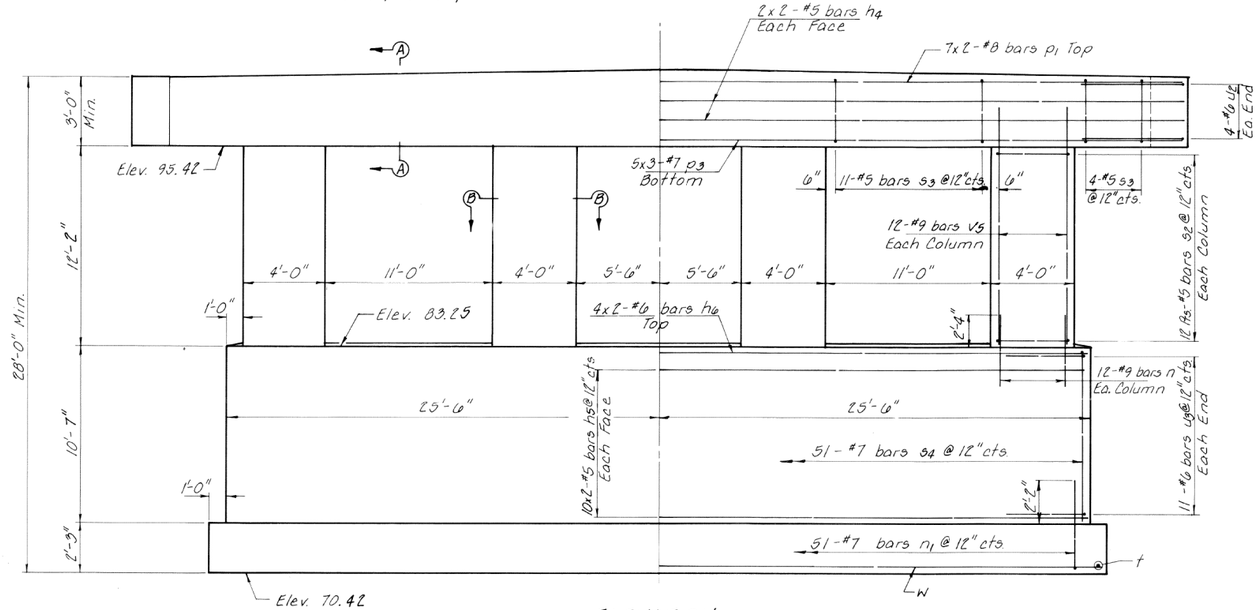

ELEVATION
(LOOKING NORTH)

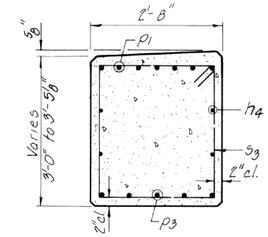

SECTION A-A
(LOOKING WEST)

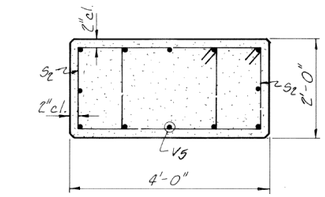

SECTION B-B

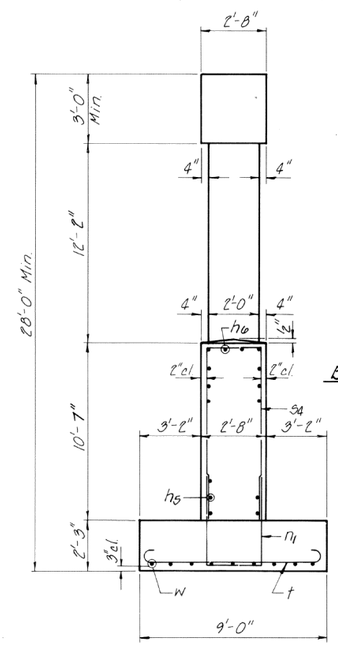

END VIEW
q_{max} = 2.49 K.S.F.

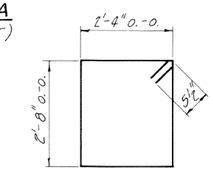

BAR s3

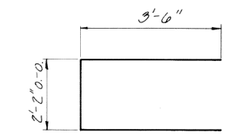

BAR u3

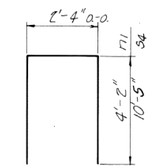

BAR n1 & s4

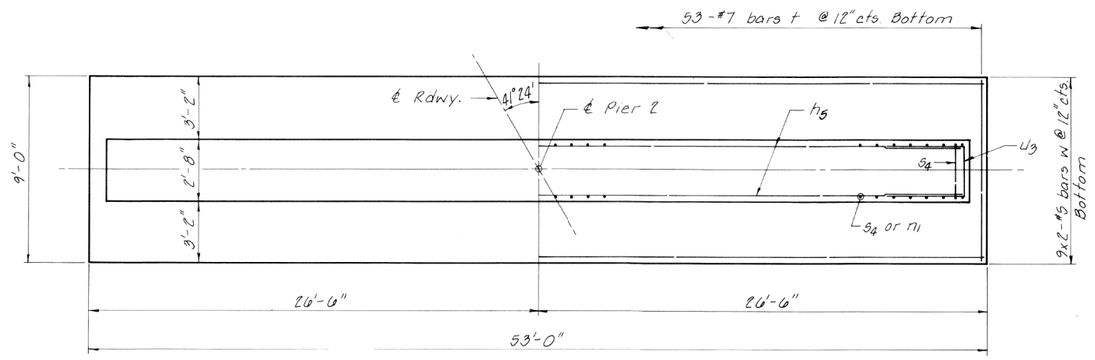

FOOTING PLAN

Note: Bars indicated thus 9x2-#5 etc. indicates 9 line of bars with 2 lengths per line.

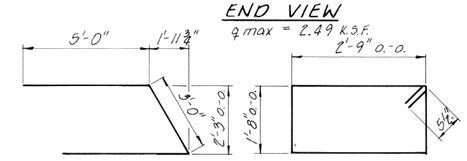

BAR u2

BAR s2

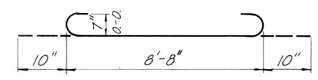

BAR t

MIN. BAR LAPS

#5	1'-5"
#6	1'-11"
#7	1'-11"
#8	3'-5"

BILL OF MATERIAL ~ PIER 2

BAR	NO.	SIZE	LENGTH	SHAPE
h4	8	#5	29'-8"	
h5	40	#5	26'-1"	
h6	8	#6	26'-4"	
n	48	#9	4'-8"	
n1	51	#7	10'-8"	
p1	14	#8	30'-8"	
p3	15	#7	20'-7"	
s2	96	#5	9'-9"	
s3	41	#5	10'-11"	
s4	51	#7	23'-2"	
t	53	#7	10'-4"	
u2	8	#6	13'-0"	
u3	22	#6	9'-2"	
v5	48	#9	14'-5"	
w	18	#5	27'-1"	
Class X Concrete			Cu. Yd.	126.5
Reinforcement Bars			Pound	13,600
Structure Excavation			Cu. Yd.	134

PIER 2
SECTION 87-0008Z-00-BR
MUIRHEAD ROAD OVER
CHICAGO CENTRAL R.R.
KANE COUNTY
STATION 9+94

COLLINS AND RICE
CONSULTING ENGINEERS

DESIGNED A.R.K. CHECKED E.B.U.
DRAWN M.G. DATE 6-17-88 NO. 2269

FILE NAME = P:\2022\220616\Cad\02 Design\CADD_Sheets\220616-sht-bridge.dgn	DESIGNED - I.P.N.	REVISED -	
HAMPTON, LENZINI AND RENWICK, INC. 3085 STEVENSON DRIVE, SUITE 201 SPRINGFIELD, ILLINOIS 62703 ILLINOIS PROFESSIONAL DESIGN FIRM LS / PE / SE CORP. 184.000959	USER NAME = Inlausen	CHECKED - S.T.M.	REVISED -
	PLOT SCALE =	DRAWN - I.P.N.	REVISED -
	PLOT DATE = 1/18/2024	CHECKED - S.T.M.	REVISED -

STATE OF ILLINOIS
DEPARTMENT OF TRANSPORTATION

EXISTING PLANS
STRUCTURE NO. 045-9132
SHEET NO. 33 OF 35 SHEETS

T.R.	SECTION	COUNTY	TOTAL SHEETS	SHEET NO.
2110	17-12082-01-BR	KANE	84	65
MUIRHEAD ROAD / CNNN R.R.		CONTRACT NO. 61K26		
		ILLINOIS	FED. AID PROJECT NO. ZU0Q(831)	

ROUTE NO.	SECTION	COUNTY	TOTAL SHEETS	SHEET NO.
C.H. 17	87-00082-00-BR	KANE	20	18
FED. ROAD DIST. NO. 7	ILLINOIS	PROJECT		

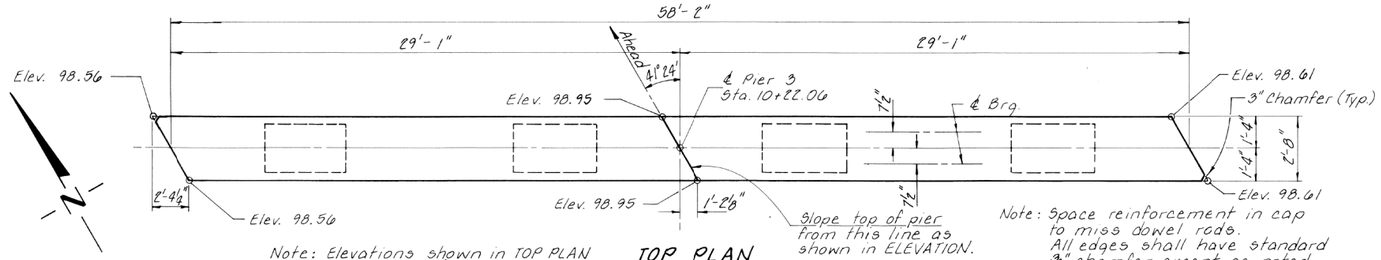

TOP PLAN

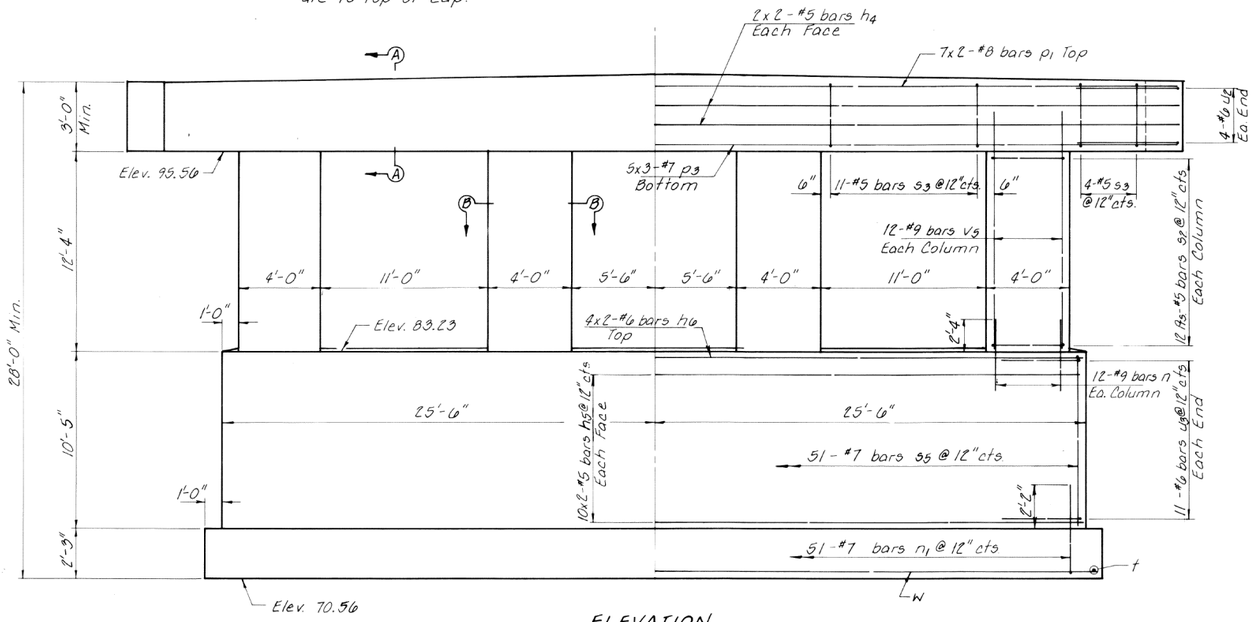

ELEVATION
(LOOKING NORTH)

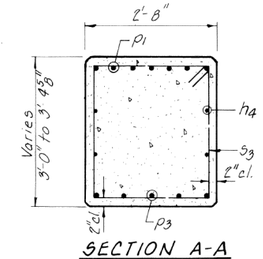

SECTION A-A
(LOOKING WEST)

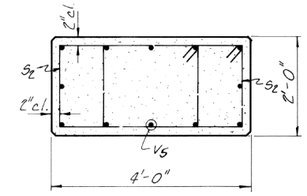

SECTION B-B

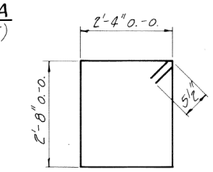

BAR s3

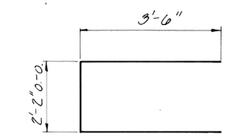

BAR u3

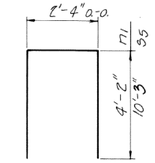

BAR n1 & s5

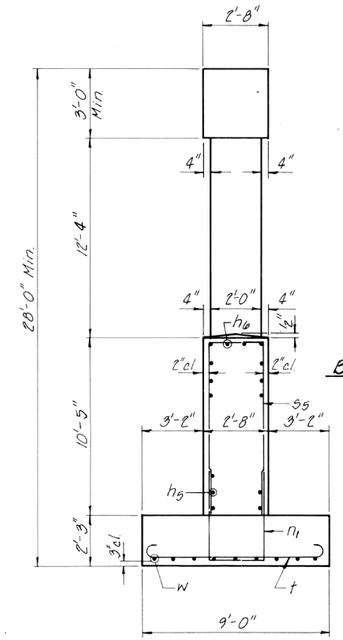

END VIEW

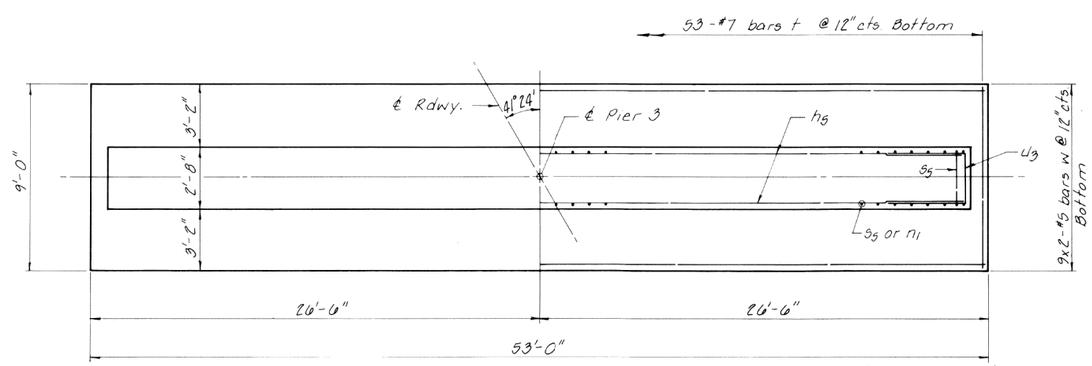

FOOTING PLAN

Note: Bars indicated thus 9x2-#5 etc. indicates 9 lines of bars with 2 lengths per line.

q_{max} = 2.42 K.S.F.

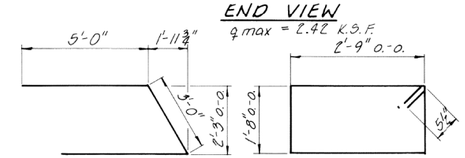

BAR u2

BAR s2

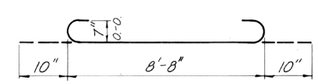

BAR t

MIN. BAR LAPS

#5	1'-5"
#6	1'-11"
#7	1'-11"
#8	3'-5"

BILL OF MATERIAL - PIER 3

BAR	NO.	SIZE	LENGTH	SHAPE
h4	8	#5	29'-8"	
h5	40	#5	26'-1"	
h6	8	#6	26'-4"	
n	48	#9	4'-8"	
n1	51	#7	10'-8"	
p1	14	#8	30'-8"	
p3	15	#7	20'-7"	
s2	96	#5	9'-9"	
s3	41	#5	10'-11"	
s5	51	#7	22'-10"	
t	53	#7	10'-4"	
u2	8	#6	13'-0"	
u3	22	#6	9'-2"	
v5	48	#9	14'-5"	
w	18	#5	27'-1"	
Class X Concrete			Cu. Yd.	125.4
Reinforcement Bars			Pound	13,570
Structure Excavation			Cu. Yd.	133

PIER 3
SECTION 87-00082-00-BR
MUIRHEAD ROAD OVER
CHICAGO CENTRAL R.R.
KANE COUNTY
STATION 9+94

COLLINS AND RICE
CONSULTING ENGINEERS

DESIGNED A.R.K. CHECKED Z.B.U.
DRAWN M.G. DATE 6-17-88 NO. 2269

ROUTE NO.	SECTION	COUNTY	TOTAL SHEETS	SHEET NO.
C.H. 17	87-0008Z-00-BR	KANE	20	19
FED. ROAD DIST. NO. 7	ILLINOIS	PROJECT		

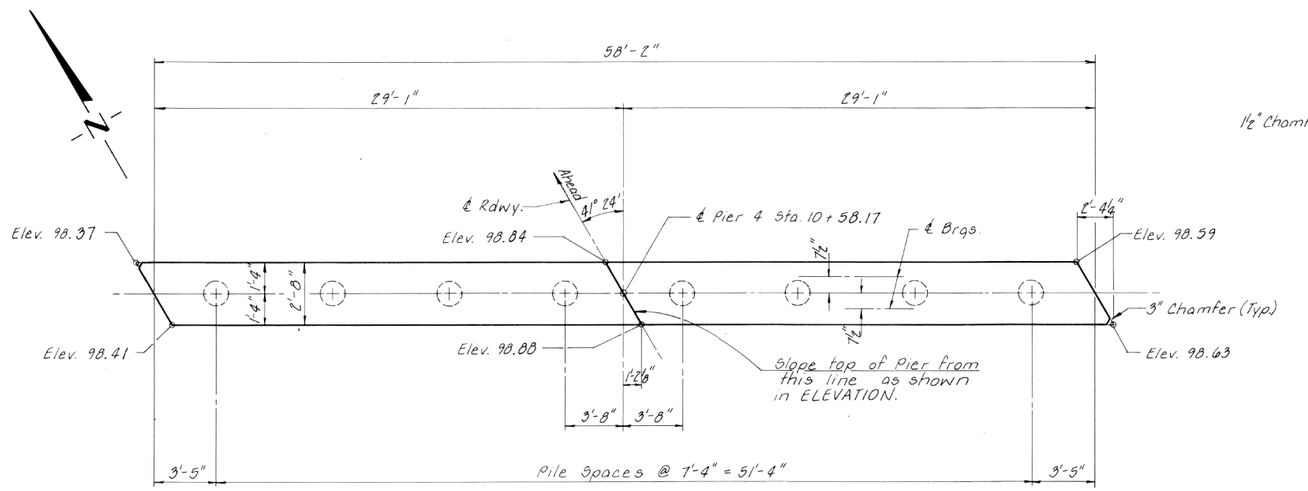

PLAN

Note: Elevations shown in PLAN are to top of cap. Bars indicated thus 3x2-#8 etc. indicates 3 line of bars with 2 lengths per line.

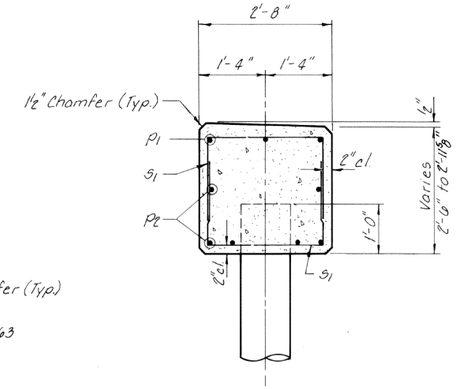

SECTION A-A
(LOOKING WEST)

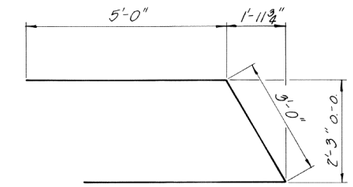

BAR U2

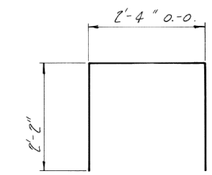

BAR S1

MIN. BAR LAPS
#7 _____ 1'-11"
#8 _____ 3'-5"

BILL OF MATERIAL ~ PIER 4

BAR	NO.	SIZE	LENGTH	SHAPE
P1	6	#8	30'-8"	
P2	12	#7	29'-11"	
S1	110	#5	6'-8"	
U2	8	#6	13'-0"	
Class X Concrete			Cu. Yd.	15.9
Reinforcement Bars			Pound	2,150
Concrete Piles			Lin. Ft.	320

See sheet 20 for pile alternates.

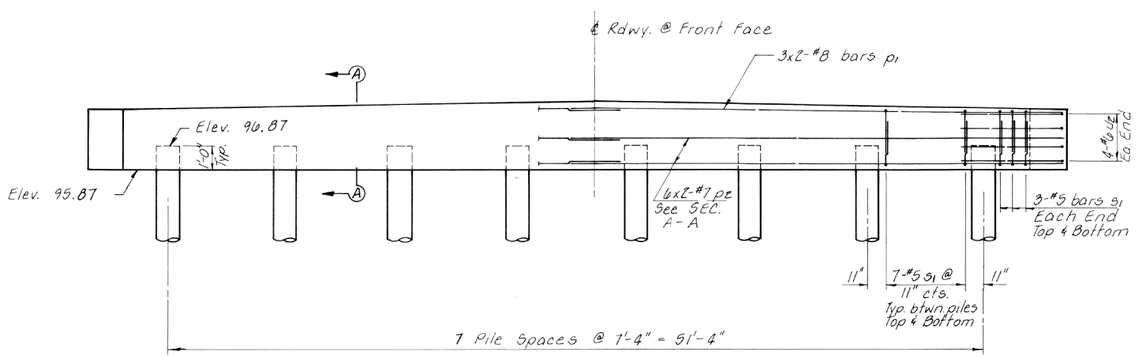

ELEVATION
(LOOKING NORTH)

PILE DATA

Type _____ Concrete
No. Req'd _____ 8
Capacity _____ 91 Tons/Pile
Est. Length _____ 40 Feet/Pile

PIER 4
SECTION 87-0008Z-00-BR
MUIRHEAD ROAD OVER
CHICAGO CENTRAL R.R.
KANE COUNTY
STATION 9+94

COLLINS AND RICE
CONSULTING ENGINEERS

DESIGNED A.R.K. CHECKED Z.B.U.
DRAWN M.G. DATE 6-17-88 NO. 2269

FILE NAME = P:\2022\220616\Cad\02 Design\CADD_Sheets\220616-sht-bridge.dgn	DESIGNED - I.P.N.	REVISED -
HAMPTON, LENZINI AND RENWICK, INC. 3085 STEVENSON DRIVE, SUITE 201 SPRINGFIELD, ILLINOIS 62703 — USER NAME = Inlausen	CHECKED - S.T.M.	REVISED -
ILLINOIS PROFESSIONAL DESIGN FIRM LS / PE / SE CORP. 184.000959 — PLOT SCALE =	DRAWN - I.P.N.	REVISED -
PLOT DATE = 1/18/2024	CHECKED - S.T.M.	REVISED -

STATE OF ILLINOIS
DEPARTMENT OF TRANSPORTATION

EXISTING PLANS
STRUCTURE NO. 045-9132
SHEET NO. 35 OF 35 SHEETS

T.R.	SECTION	COUNTY	TOTAL SHEETS	SHEET NO.
2110	17-12082-01-BR	KANE	84	67
MUIRHEAD ROAD / CNNN R.R.		CONTRACT NO. 61K26		
		ILLINOIS	FED. AID PROJECT NO. ZU0Q(831)	

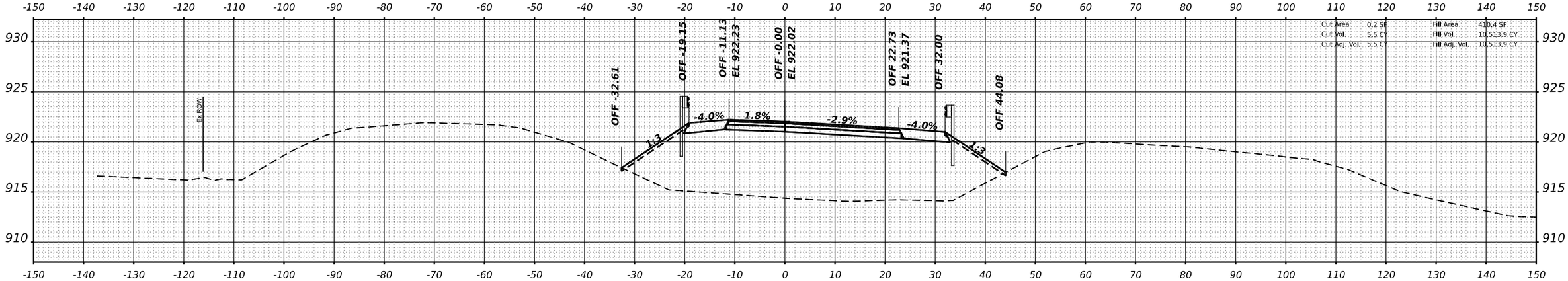

STA 15+75.00

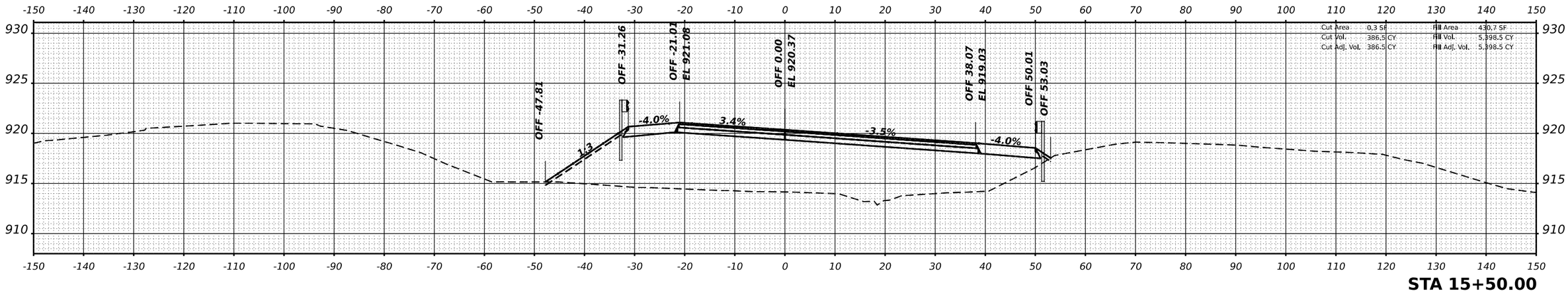

STA 15+50.00

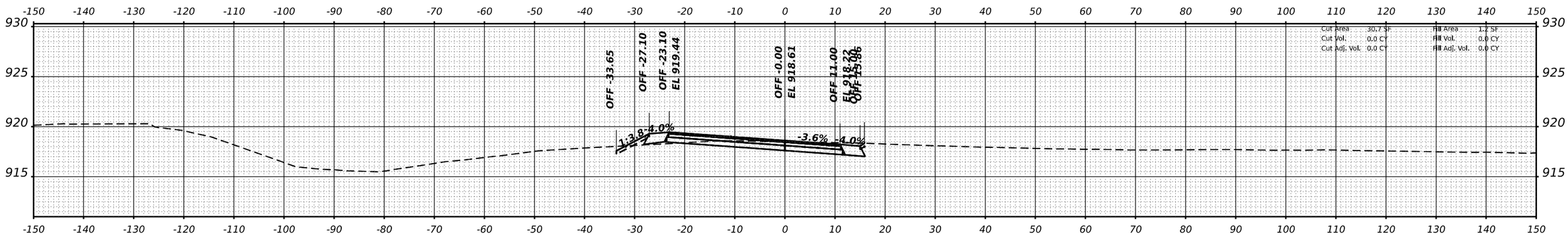

STA 15+25.00

FINAL SURVEY		BY	DATE
NOTE BOOK	SURVEYED		
	PLOTTED		
	TEMPLATE		
	AREAS		
NO.	AREAS CHECKED		

ORIGINAL SURVEY		BY	DATE
NOTE BOOK	SURVEYED		
	PLOTTED		
	TEMPLATE		
	AREAS		
NO.	AREAS CHECKED		

MODEL: P_MUIRHEAD - 15+25.00 [Sheet]
FILE NAME: P:\2022\220616\Cad\02 Design\CADD Sheets\220616-sht-xs MuirheadL.dgn

HAMPTON, LENZINI AND RENWICK, INC.
1707 N RANDALL ROAD, SUITE 100
ELGIN, ILLINOIS 60123
ILLINOIS PROFESSIONAL DESIGN FIRM
LS / PE / SE CORP. 184.000959

USER NAME = ajungermann	DESIGNED -	REVISED -	
	DRAWN -	REVISED -	
PLOT SCALE = 0.16666667 ' / in.	CHECKED -	REVISED -	
PLOT DATE = 3/18/2025	DATE -	REVISED -	

PLATO TOWNSHIP
ROAD DISTRICT

MUIRHEAD ROAD OVER CHICAGO, CENTRAL AND PACIFIC RAILROAD

SCALE: | SHEET OF SHEETS | STA.

F.A. RTE.	SECTION	COUNTY	TOTAL SHEETS	SHEET NO.
	17-12082-01-BR	KANE	88	68
		CONTRACT NO. 61K26		
		ILLINOIS	FED. AID PROJECT	

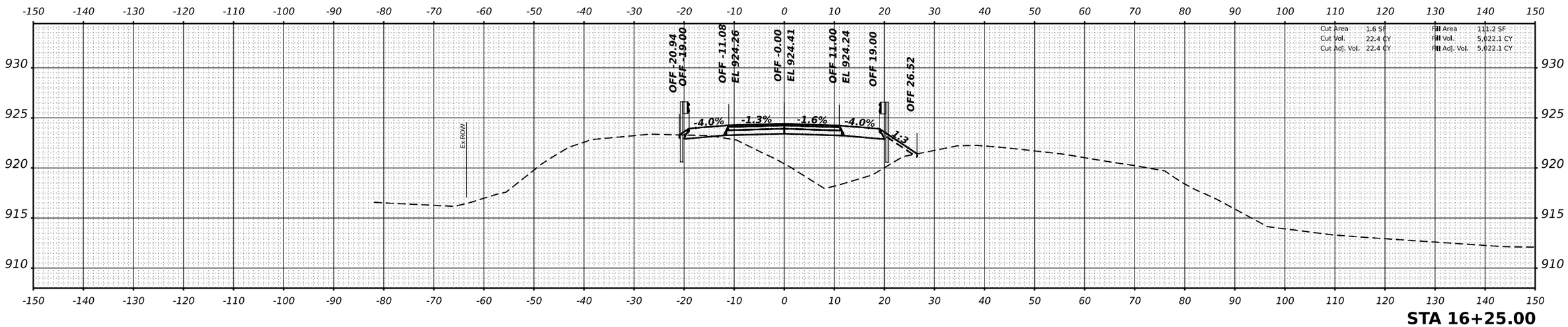

STA 16+25.00

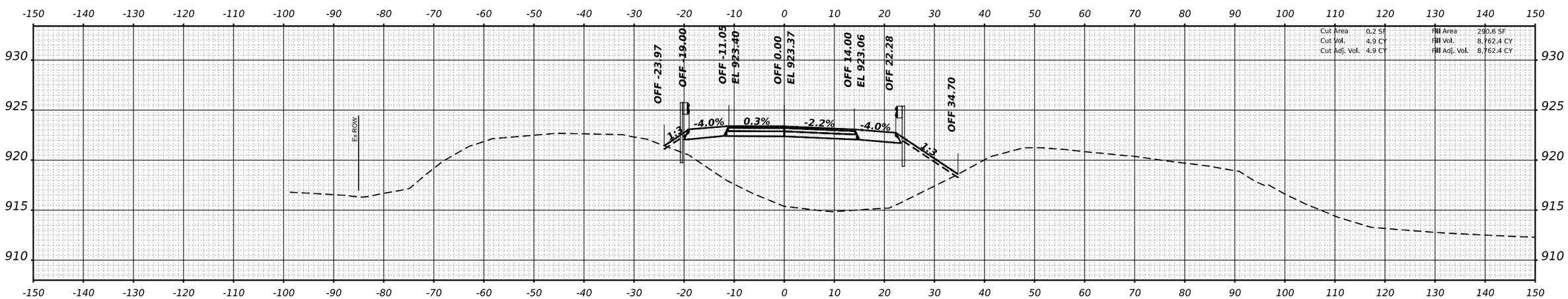

STA 16+00.00

FINAL SURVEY		BY	DATE
NOTE BOOK	SURVEYED		
	PLOTTED		
	TEMPLATE		
	AREAS		
NO.	AREAS CHECKED		

ORIGINAL SURVEY		BY	DATE
NOTE BOOK	SURVEYED		
	PLOTTED		
	TEMPLATE		
	AREAS		
NO.	AREAS CHECKED		

MODEL: P_MUIRHEAD - 16+00.00 [Sheet]
FILE NAME: P:\2022\220616\Cat002 Design\CADD_Sheets\220616-sht-xs_Muirhead.dgn

HAMPTON, LENZINI AND RENWICK, INC.
1707 N RANDALL ROAD, SUITE 100
ELGIN, ILLINOIS 60123
ILLINOIS PROFESSIONAL DESIGN FIRM
LS / PE / SE CORP. 184.000959

USER NAME = ajungermann	DESIGNED -	REVISED -
	DRAWN -	REVISED -
PLOT SCALE = 0.16666633 ' / in.	CHECKED -	REVISED -
PLOT DATE = 3/18/2025	DATE -	REVISED -

PLATO TOWNSHIP
ROAD DISTRICT

MUIRHEAD ROAD OVER CHICAGO, CENTRAL AND PACIFIC RAILROAD

SCALE: SHEET OF SHEETS STA.

F.A. RTE.	SECTION	COUNTY	TOTAL SHEETS	SHEET NO.
	17-12082-01-BR	KANE	88	69
		CONTRACT NO. 61K26		
	ILLINOIS	FED. AID PROJECT		

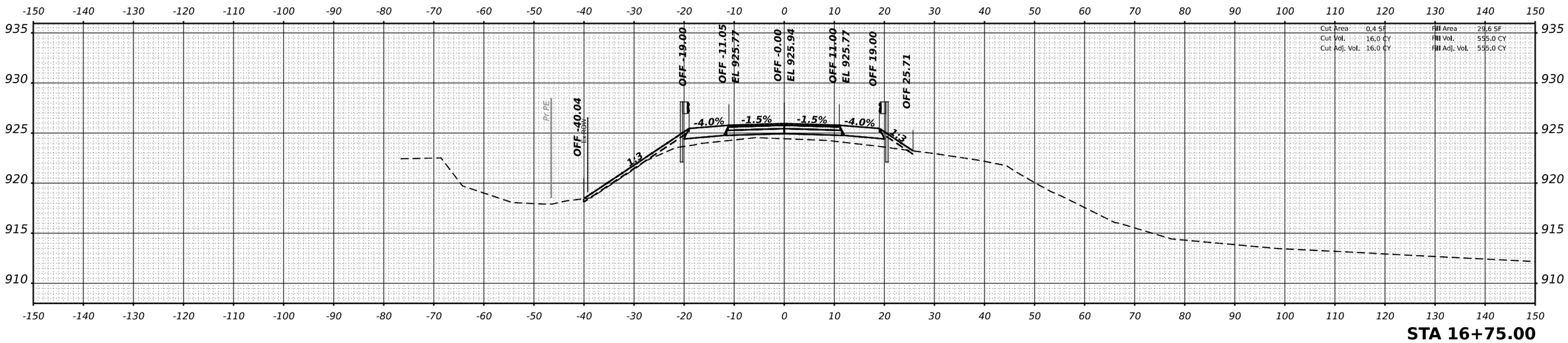

STA 16+75.00

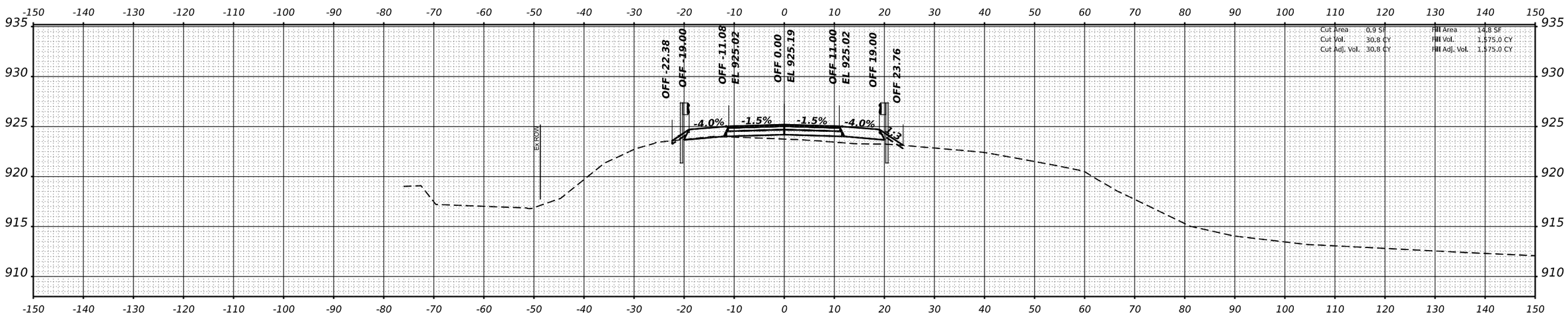

STA 16+50.00

FINAL SURVEY		BY	DATE
NOTE BOOK	SURVEYED		
	PLOTTED		
	TEMPLATE		
	AREAS		
NO.	AREAS CHECKED		

ORIGINAL SURVEY		BY	DATE
NOTE BOOK	SURVEYED		
	PLOTTED		
	TEMPLATE		
	AREAS		
NO.	AREAS CHECKED		

MODEL: P_MUIRHEAD - 16+50.00 [Sheet]
FILE NAME: P:\2022\220616\Cad\02 Design\CADD_Sheets\220616sht-xs_Muirhead.dgn

HAMPTON, LENZINI AND RENWICK, INC.
1707 N. RANDALL ROAD, SUITE 100
ELGIN, ILLINOIS 60123
ILLINOIS PROFESSIONAL DESIGN FIRM
LS / PE / SE CORP. 184.000959

USER NAME = ajungermann	DESIGNED -	REVISED -
	DRAWN -	REVISED -
PLOT SCALE = 0.16666633 ' / in.	CHECKED -	REVISED -
PLOT DATE = 3/18/2025	DATE -	REVISED -

PLATO TOWNSHIP
ROAD DISTRICT

MUIRHEAD ROAD OVER CHICAGO, CENTRAL AND PACIFIC RAILROAD

SCALE: | SHEET OF SHEETS | STA.

F.A. RTE.	SECTION	COUNTY	TOTAL SHEETS	SHEET NO.
	17-12082-01-BR	KANE	88	70
		CONTRACT NO. 61K26		
		ILLINOIS	FED. AID PROJECT	

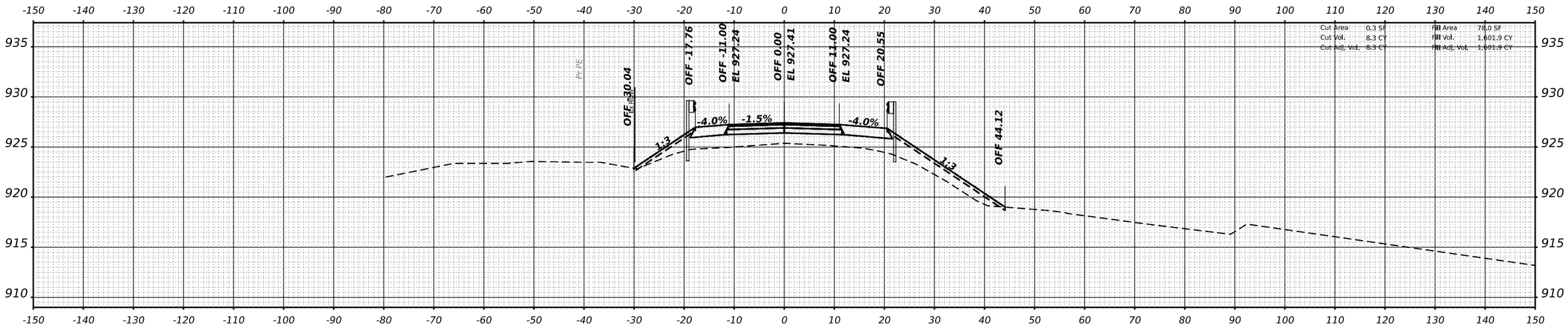

STA 17+25.00

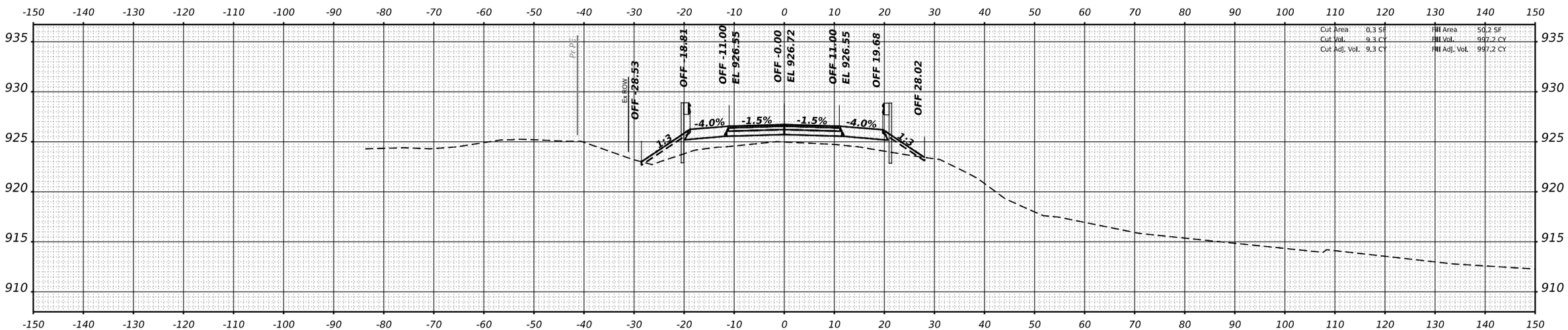

STA 17+00.00

FINAL SURVEY		BY	DATE
NOTE BOOK	SURVEYED		
	PLOTTED		
	TEMPLATE		
	AREAS		
	AREAS CHECKED		
NO.			

ORIGINAL SURVEY		BY	DATE
NOTE BOOK	SURVEYED		
	PLOTTED		
	TEMPLATE		
	AREAS		
	AREAS CHECKED		
NO.			

MODEL: P_MUIRHEAD - 17+00.00 [Sheet]
FILE NAME: P:\2022\220616\Cad\02 Design\CADD_Sheets\220616-Intxs_Muirhead.dgn

HAMPTON, LENZINI AND RENWICK, INC.
1707 N RANDALL ROAD, SUITE 100
ELGIN, ILLINOIS 60123
ILLINOIS PROFESSIONAL DESIGN FIRM
LS / PE / SE CORP. 184.000959

USER NAME = ajungermann	DESIGNED -	REVISED -	
	DRAWN -	REVISED -	
PLOT SCALE = 0.16666633 ' / in.	CHECKED -	REVISED -	
PLOT DATE = 3/18/2025	DATE -	REVISED -	

PLATO TOWNSHIP ROAD DISTRICT

MUIRHEAD ROAD OVER CHICAGO, CENTRAL AND PACIFIC RAILROAD

SCALE: | SHEET OF SHEETS | STA.

F.A. RTE.	SECTION	COUNTY	TOTAL SHEETS	SHEET NO.
	17-12082-01-BR	KANE	88	71
		CONTRACT NO. 61K26		
	ILLINOIS	FED. AID PROJECT		

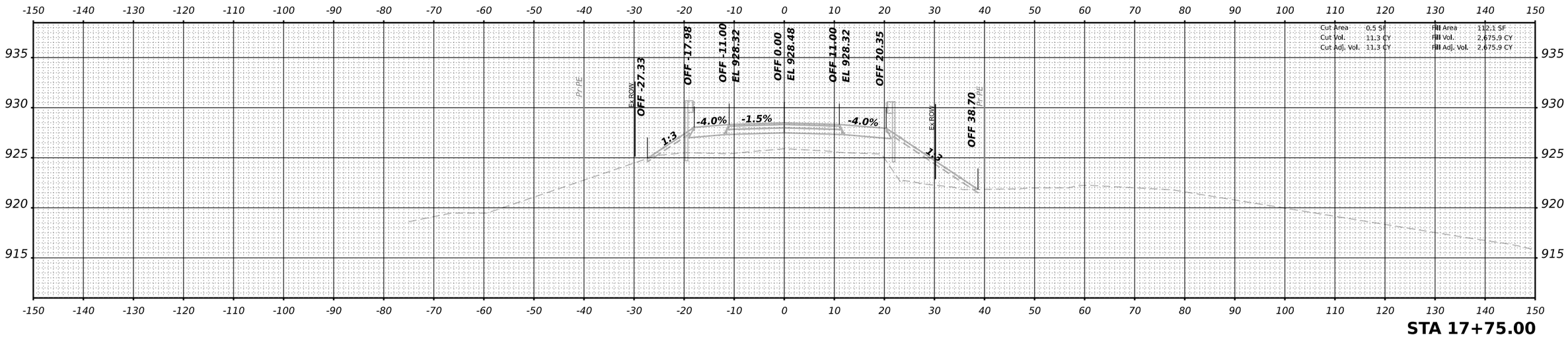

STA 17+75.00

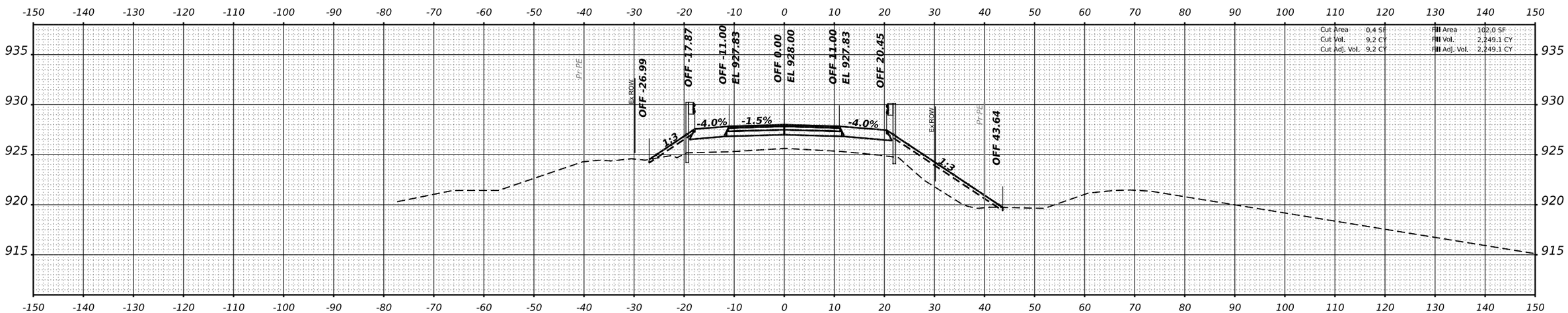

STA 17+50.00

FINAL SURVEY		BY	DATE
NOTE BOOK	SURVEYED		
	PLOTTED		
	TEMPLATE		
	AREAS		
NO.	AREAS CHECKED		

ORIGINAL SURVEY		BY	DATE
NOTE BOOK	SURVEYED		
	PLOTTED		
	TEMPLATE		
	AREAS		
NO.	AREAS CHECKED		

MODEL: P_MUIRHEAD - 17+50.00 [Sheet]
FILE NAME: P:\2022\220616\Cad\02 Design\CADD_Sheets\220616-sht-xs_Muirhead.dgn

HAMPTON, LENZINI AND RENWICK, INC.
1707 N RANDALL ROAD, SUITE 100
ELGIN, ILLINOIS 60123
ILLINOIS PROFESSIONAL DESIGN FIRM
LS / PE / SE CORP. 184.000959

USER NAME = ajungermann	DESIGNED -	REVISED -	
	DRAWN -	REVISED -	
PLOT SCALE = 0.16666633 ' / in.	CHECKED -	REVISED -	
PLOT DATE = 3/18/2025	DATE -	REVISED -	

PLATO TOWNSHIP
ROAD DISTRICT

MUIRHEAD ROAD OVER CHICAGO, CENTRAL AND PACIFIC RAILROAD

SCALE: SHEET OF SHEETS STA.

F.A. RTE.	SECTION	COUNTY	TOTAL SHEETS	SHEET NO.
	17-12082-01-BR	KANE	88	72
		CONTRACT NO. 61K26		
	ILLINOIS	FED. AID PROJECT		

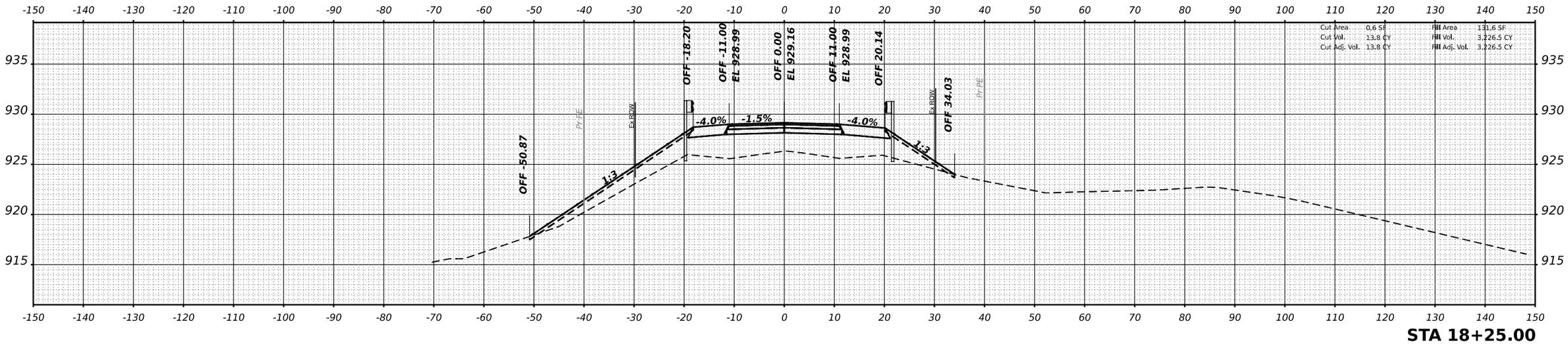

STA 18+25.00

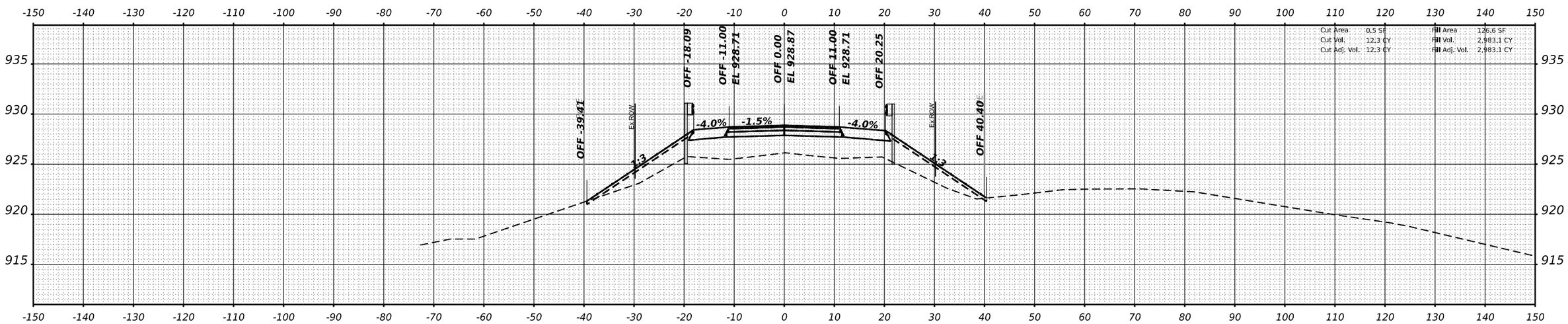

STA 18+00.00

FINAL SURVEY		BY	DATE
NOTE BOOK	SURVEYED		
	PLOTTED		
	TEMPLATE		
	AREAS		
NO.	AREAS CHECKED		

ORIGINAL SURVEY		BY	DATE
NOTE BOOK	SURVEYED		
	PLOTTED		
	TEMPLATE		
	AREAS		
NO.	AREAS CHECKED		

MODEL: P_MUIRHEAD - 18+00.00 [Sheet]
FILE NAME: P:\2022\220616\Cad\02 Design\CADD_Sheets\220616-sht-cs_Muirhead.dgn

HAMPTON, LENZINI AND RENWICK, INC.
1707 N RANDALL ROAD, SUITE 100
ELGIN, ILLINOIS 60123
ILLINOIS PROFESSIONAL DESIGN FIRM
LS / PE / SE CORP. 184.003959

USER NAME = ajungermann	DESIGNED -	REVISED -	
	DRAWN -	REVISED -	
PLOT SCALE = 0.16666633 ' / in.	CHECKED -	REVISED -	
PLOT DATE = 3/18/2025	DATE -	REVISED -	

PLATO TOWNSHIP
ROAD DISTRICT

MUIRHEAD ROAD OVER CHICAGO, CENTRAL AND PACIFIC RAILROAD

SCALE: | SHEET OF SHEETS | STA.

F.A. RTE.	SECTION	COUNTY	TOTAL SHEETS	SHEET NO.
	17-12082-01-BR	KANE	88	73
		CONTRACT NO. 61K26		
		ILLINOIS	FED. AID PROJECT	

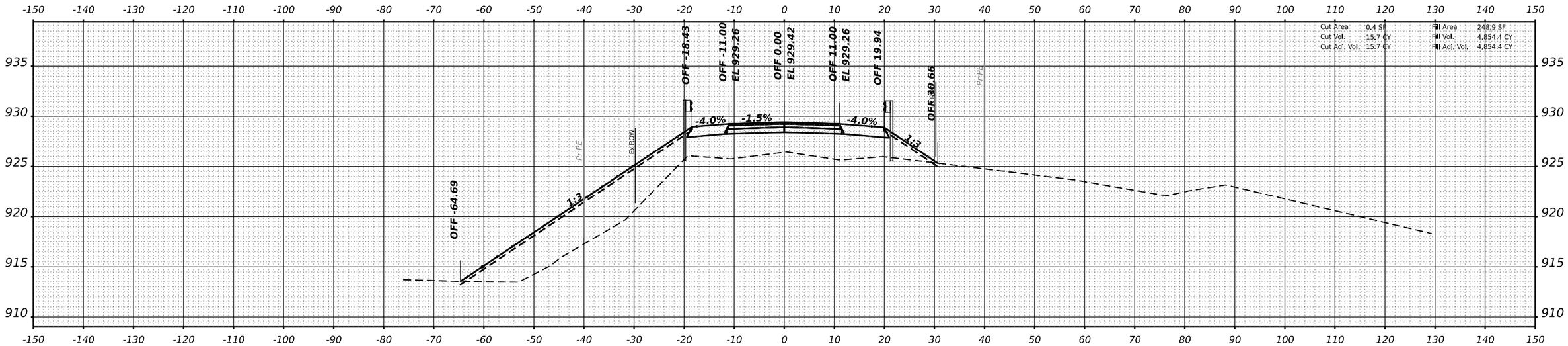

STA 18+75.00

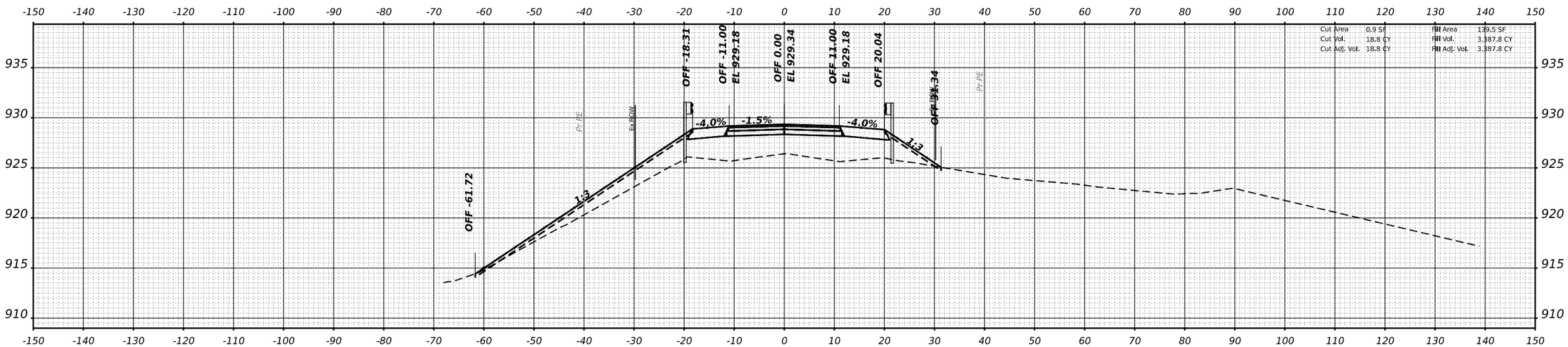

STA 18+50.00

FINAL SURVEY	BY	DATE
SURVEYED		
PLOTTED		
TEMPLATE		
AREAS		
AREAS CHECKED		
NOTE BOOK		
NO.		

ORIGINAL SURVEY	BY	DATE
SURVEYED		
PLOTTED		
TEMPLATE		
AREAS		
AREAS CHECKED		
NOTE BOOK		
NO.		

MODEL: P_MUIRHEAD - 18+50.00 [Sheet]
FILE NAME: P:\2022\220616\Cad\02 Design\CADD_Sheets\220616-sht-xs_Muirhead.dgn

HAMPTON, LENZINI AND RENWICK, INC.
2707 N. RANDALL ROAD, SUITE 100
ELGIN, ILLINOIS 60123
ILLINOIS PROFESSIONAL DESIGN FIRM
LS / PE / SE CORP. 184.000959

USER NAME = ajungermann	DESIGNED -	REVISED -	
	DRAWN -	REVISED -	
PLOT SCALE = 0.16666633 ' / in.	CHECKED -	REVISED -	
PLOT DATE = 3/18/2025	DATE -	REVISED -	

PLATO TOWNSHIP ROAD DISTRICT

MUIRHEAD ROAD OVER CHICAGO, CENTRAL AND PACIFIC RAILROAD

SCALE: | SHEET OF SHEETS | STA.

F.A. RTE.	SECTION	COUNTY	TOTAL SHEETS	SHEET NO.
	17-12082-01-BR	KANE	88	74
	CONTRACT NO. 61K26			
	ILLINOIS	FED. AID PROJECT		

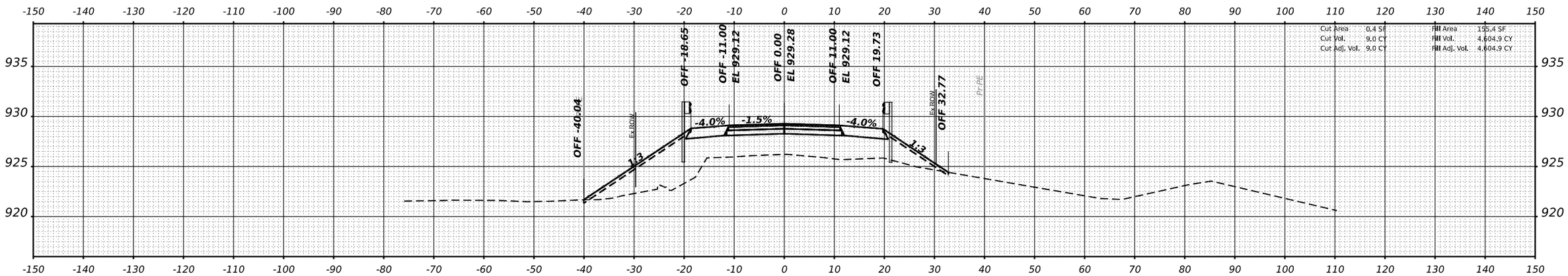

STA 19+25.00

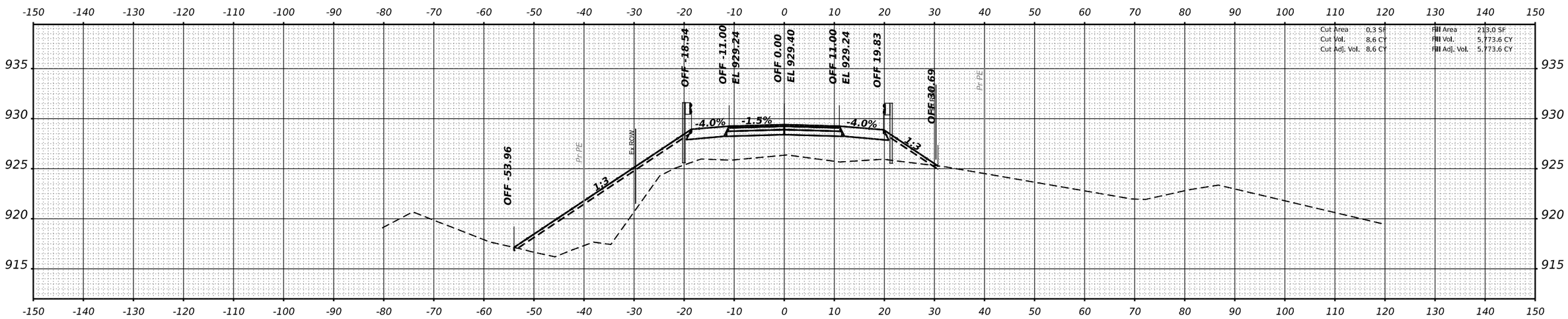

STA 19+00.00

FINAL SURVEY		BY	DATE
NOTE BOOK	SURVEYED		
	PLOTTED		
	TEMPLATE		
	AREAS		
NO.	AREAS CHECKED		

ORIGINAL SURVEY		BY	DATE
NOTE BOOK	SURVEYED		
	PLOTTED		
	TEMPLATE		
	AREAS		
NO.	AREAS CHECKED		

MODEL: P_MUIRHEAD - 19+00.00 [Sheet]
FILE NAME: P:\2022\220616\Cwt02 Design\CADD_Sheets\220616sht02_Muirhead.dgn

HAMPTON, LENZINI AND RENWICK, INC.
1707 N RANDALL ROAD, SUITE 100
ELGIN, ILLINOIS 60123
ILLINOIS PROFESSIONAL DESIGN FIRM
LS / PE / SE CORP. 184.000959

USER NAME = ajungermann	DESIGNED -	REVISED -	
	DRAWN -	REVISED -	
PLOT SCALE = 0.16666633 ' / in.	CHECKED -	REVISED -	
PLOT DATE = 3/18/2025	DATE -	REVISED -	

PLATO TOWNSHIP
ROAD DISTRICT

MUIRHEAD ROAD OVER CHICAGO, CENTRAL AND PACIFIC RAILROAD

SCALE: | SHEET OF SHEETS | STA.

F.A. RTE.	SECTION	COUNTY	TOTAL SHEETS	SHEET NO.
	17-12082-01-BR	KANE	88	75
		CONTRACT NO. 61K26		
	ILLINOIS	FED. AID PROJECT		

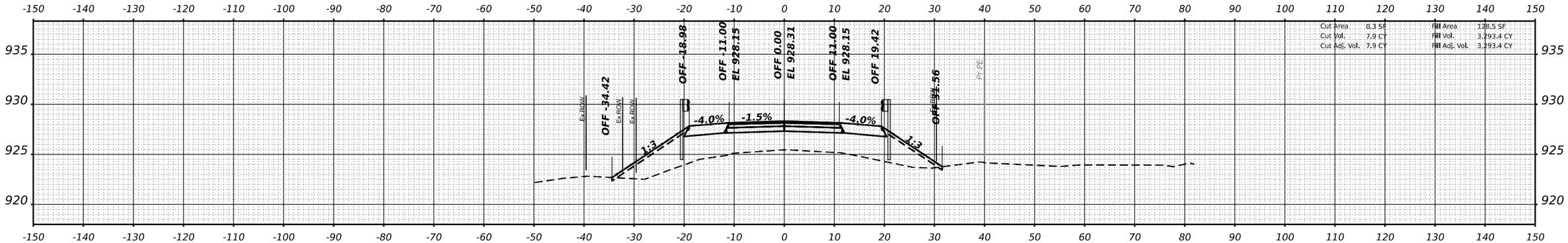

STA 20+00.00

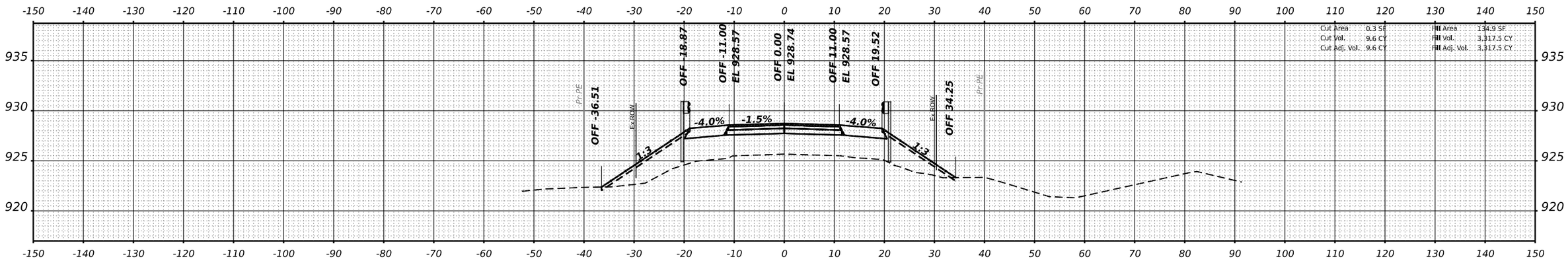

STA 19+75.00

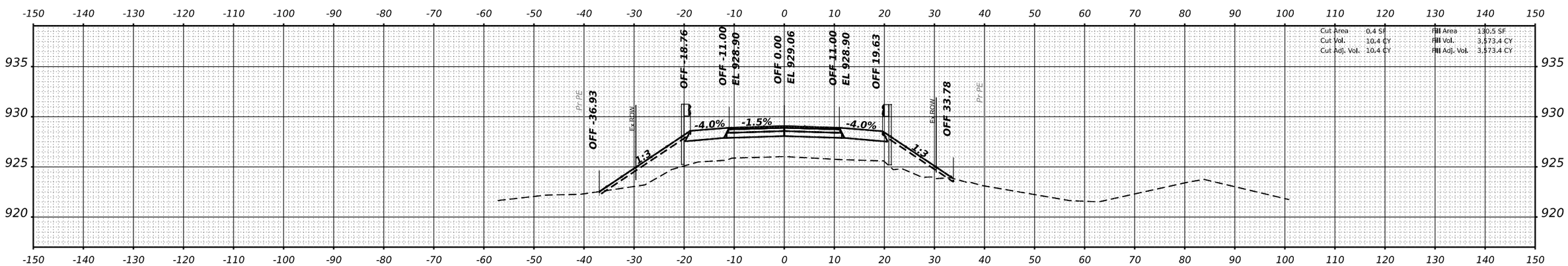

STA 19+50.00

FINAL SURVEY		BY	DATE
NOTE BOOK	SURVEYED		
	PLOTTED		
	TEMPLATE		
	AREAS		
NO.	AREAS CHECKED		

ORIGINAL SURVEY		BY	DATE
NOTE BOOK	SURVEYED		
	PLOTTED		
	TEMPLATE		
	AREAS		
NO.	AREAS CHECKED		

MODEL: P_MUIRHEAD - 19+50.00 [Sheet]
FILE NAME: P:\2022\220616\Cat002 Design\CADD_Sheets\220616-Intxs_Muirhead.dgn

HAMPTON, LENZINI AND RENWICK, INC.
1707 N RANDALL ROAD, SUITE 100
ELGIN, ILLINOIS 60123
ILLINOIS PROFESSIONAL DESIGN FIRM
LS / PE / SE CORP. 184.000959

USER NAME = ajungermann	DESIGNED -	REVISED -	
	DRAWN -	REVISED -	
PLOT SCALE = 0.16666633 ' / in.	CHECKED -	REVISED -	
PLOT DATE = 3/18/2025	DATE -	REVISED -	

PLATO TOWNSHIP
ROAD DISTRICT

MUIRHEAD ROAD OVER CHICAGO, CENTRAL AND PACIFIC RAILROAD

SCALE: | SHEET OF SHEETS | STA.

F.A. RTE.	SECTION	COUNTY	TOTAL SHEETS	SHEET NO.
	17-12082-01-BR	KANE	88	76
		CONTRACT NO. 61K26		
	ILLINOIS	FED. AID PROJECT		

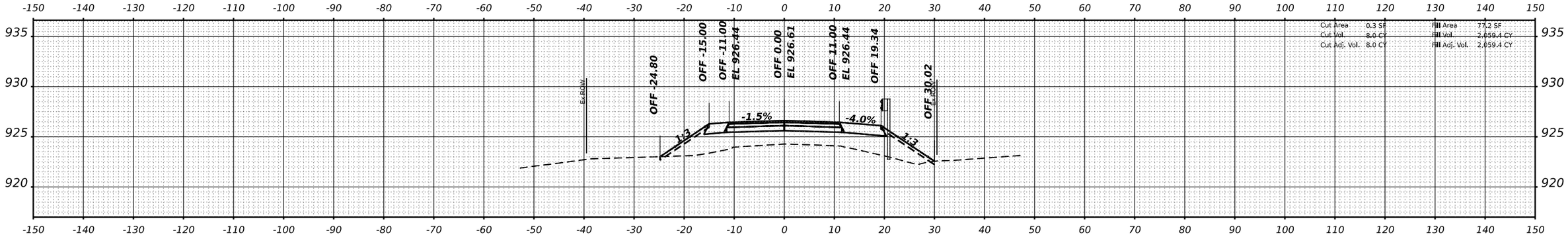

STA 20+75.00

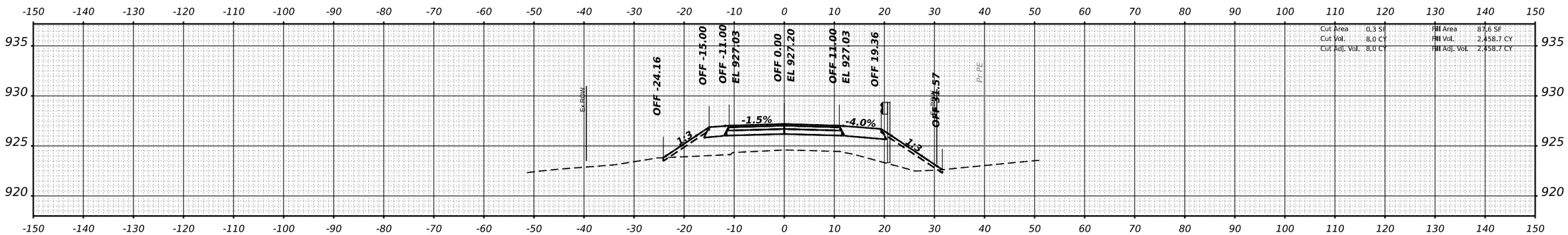

STA 20+50.00

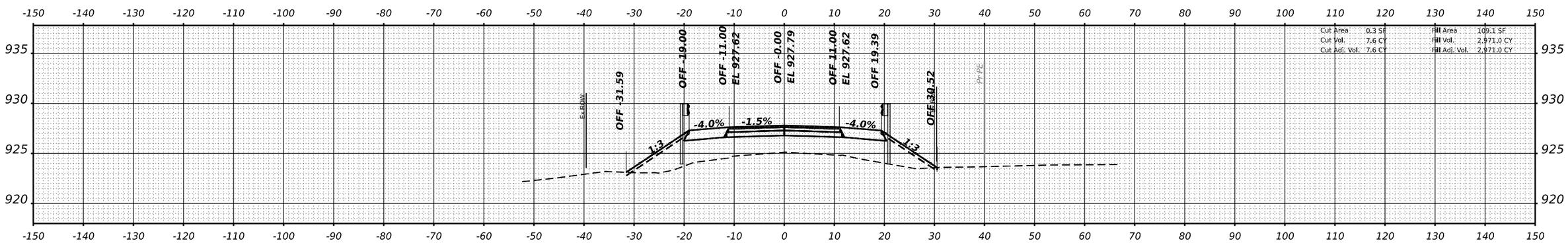

STA 20+25.00

FINAL SURVEY	BY	DATE
SURVEYED		
PLOTTED		
TEMPLATE		
AREAS		
AREAS CHECKED		
NOTE BOOK NO.		

ORIGINAL SURVEY	BY	DATE
SURVEYED		
PLOTTED		
TEMPLATE		
AREAS		
AREAS CHECKED		
NOTE BOOK NO.		

MODEL: P_MUIRHEAD - 20+25.00 [Sheet]
FILE NAME: P:\2022\220616\Cad\02 Design\CADD_Sheets\220616sht-xs_Muirhead.dgn

HAMPTON, LENZINI AND RENWICK, INC.
1707 N RANDALL ROAD, SUITE 100
ELGIN, ILLINOIS 60123
ILLINOIS PROFESSIONAL DESIGN FIRM
LS / PE / SE CORP. 184.000959

USER NAME = ajungermann	DESIGNED -	REVISED -
	DRAWN -	REVISED -
PLOT SCALE = 0.16666633 ' / in.	CHECKED -	REVISED -
PLOT DATE = 3/18/2025	DATE -	REVISED -

PLATO TOWNSHIP ROAD DISTRICT

MUIRHEAD ROAD OVER CHICAGO, CENTRAL AND PACIFIC RAILROAD

SCALE: SHEET OF SHEETS STA.

F.A. RTE.	SECTION	COUNTY	TOTAL SHEETS	SHEET NO.
	17-12082-01-BR	KANE	88	77
		CONTRACT NO. 61K26		
		ILLINOIS	FED. AID PROJECT	

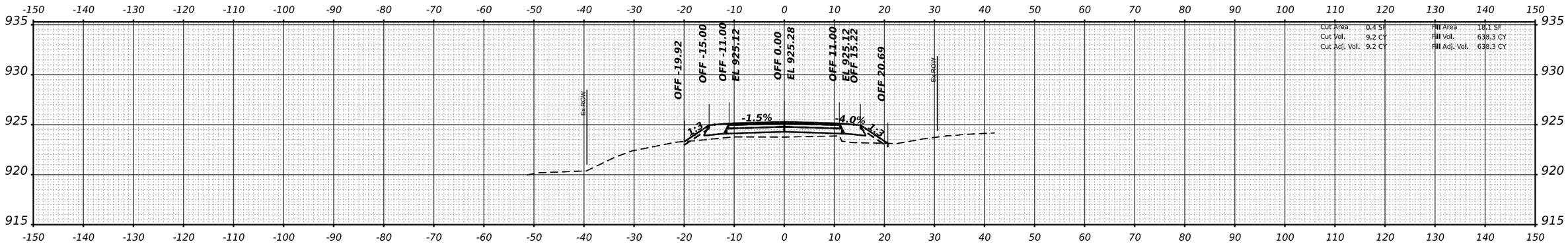

STA 21+50.00

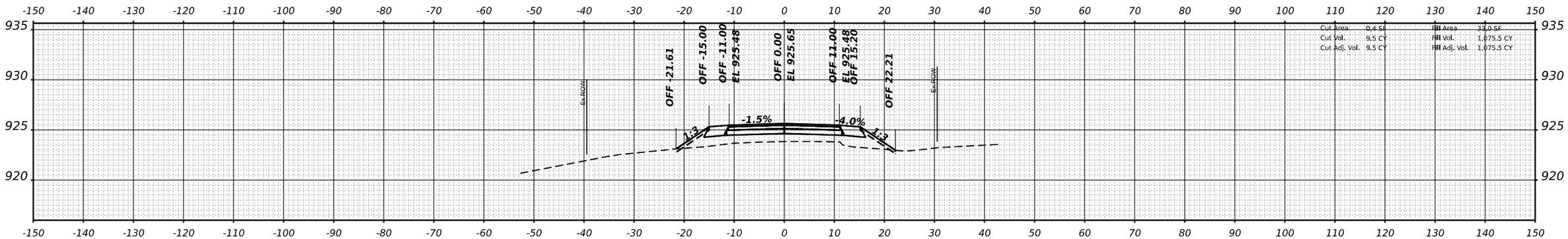

STA 21+25.00

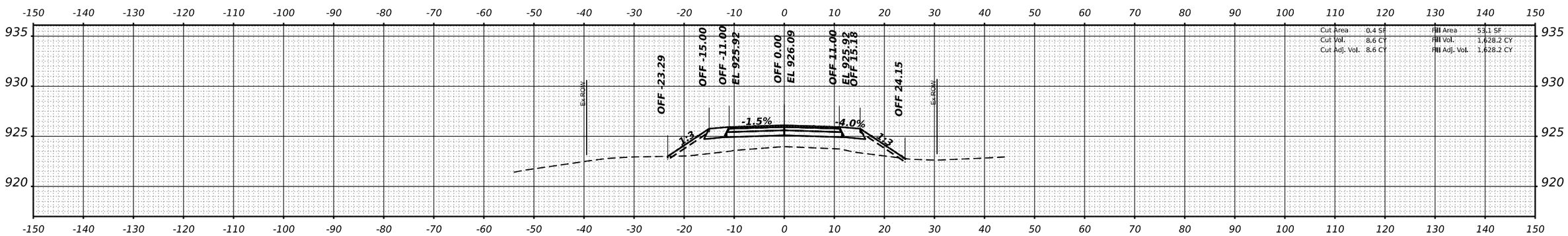

STA 21+00.00

FINAL SURVEY	BY	DATE
SURVEYED		
PLOTTED		
TEMPLATE		
AREAS		
AREAS CHECKED		
NOTE BOOK		
NO.		

ORIGINAL SURVEY	BY	DATE
SURVEYED		
PLOTTED		
TEMPLATE		
AREAS		
AREAS CHECKED		
NOTE BOOK		
NO.		

MODEL: P_MUIRHEAD - 21+00.00 [Sheet]
FILE NAME: P:\2022\220616\Cad\02 Design\CADD_Sheets\220616-sht-xs_Muirhead.dgn

HAMPTON, LENZINI AND RENWICK, INC.
1707 N RANDALL ROAD, SUITE 100
ELGIN, ILLINOIS 60123
ILLINOIS PROFESSIONAL DESIGN FIRM
LS / PE / SE CORP. 184.000959

USER NAME = ajungermann	DESIGNED -	REVISED -
	DRAWN -	REVISED -
PLOT SCALE = 0.16666633 ' / in.	CHECKED -	REVISED -
PLOT DATE = 3/18/2025	DATE -	REVISED -

PLATO TOWNSHIP ROAD DISTRICT

MUIRHEAD ROAD OVER CHICAGO, CENTRAL AND PACIFIC RAILROAD

SCALE: SHEET OF SHEETS STA.

F.A. RTE.	SECTION	COUNTY	TOTAL SHEETS	SHEET NO.
	17-12082-01-BR	KANE	88	78
		CONTRACT NO. 61K26		
	ILLINOIS	FED. AID PROJECT		

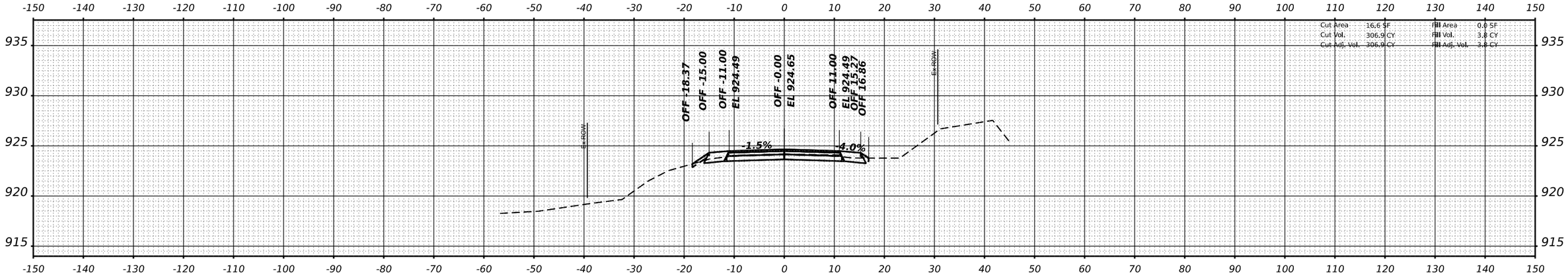

STA 22+25.00

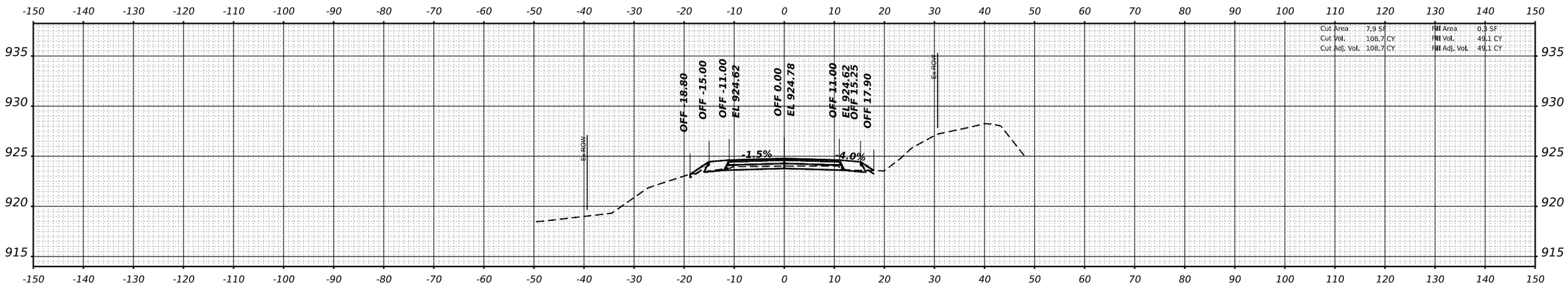

STA 22+00.00

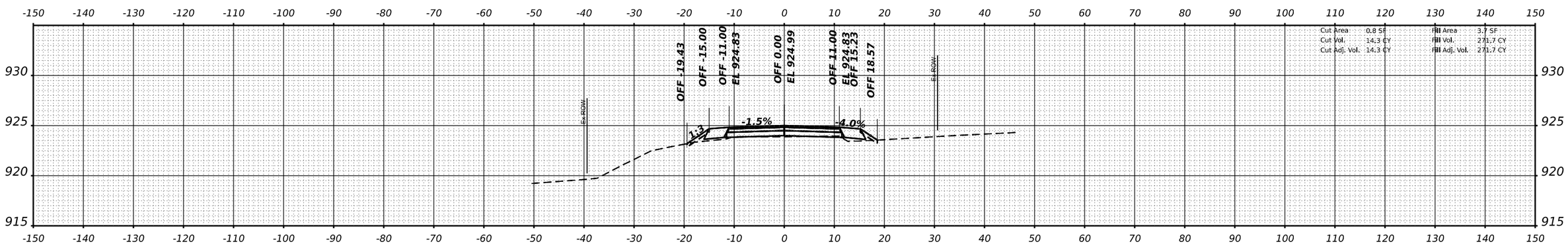

STA 21+75.00

FINAL SURVEY		BY	DATE
NOTE BOOK	SURVEYED		
	PLOTTED		
	TEMPLATE		
	AREAS		
NO.	AREAS CHECKED		

ORIGINAL SURVEY		BY	DATE
NOTE BOOK	SURVEYED		
	PLOTTED		
	TEMPLATE		
	AREAS		
NO.	AREAS CHECKED		

MODEL: P_MUIRHEAD - 21+75.00 [Sheet]
FILE NAME: P:\2022\220616\Cad\02 Design\CADD_Sheets\220616-Intxs_Muirhead.dgn

HAMPTON, LENZINI AND RENWICK, INC.
1707 N RANDALL ROAD, SUITE 100
ELGIN, ILLINOIS 60123
ILLINOIS PROFESSIONAL DESIGN FIRM
LS / PE / SE CORP. 184.000959

USER NAME = ajungermann	DESIGNED -	REVISED -	
	DRAWN -	REVISED -	
PLOT SCALE = 0.16666633 ' / in.	CHECKED -	REVISED -	
PLOT DATE = 3/18/2025	DATE -	REVISED -	

PLATO TOWNSHIP ROAD DISTRICT

MUIRHEAD ROAD OVER CHICAGO, CENTRAL AND PACIFIC RAILROAD

SCALE: | SHEET OF SHEETS | STA.

F.A. RTE.	SECTION	COUNTY	TOTAL SHEETS	SHEET NO.
	17-12082-01-BR	KANE	88	79
		CONTRACT NO. 61K26		
	ILLINOIS	FED. AID PROJECT		

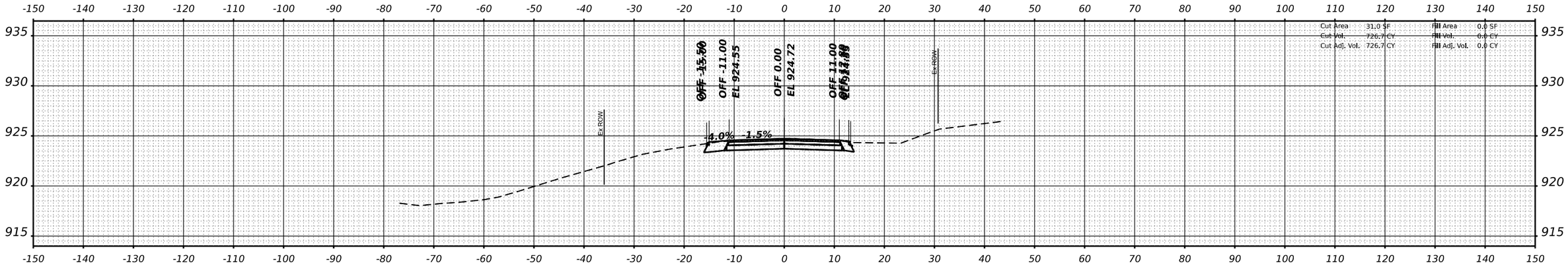

STA 23+00.00

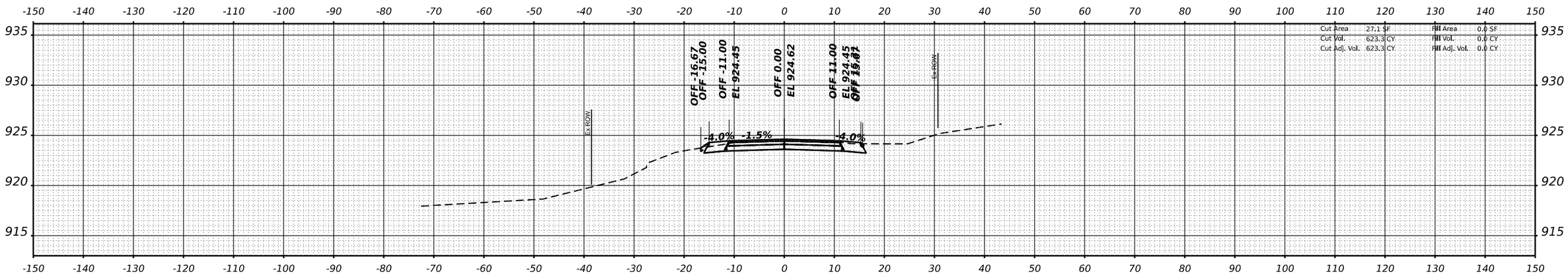

STA 22+75.00

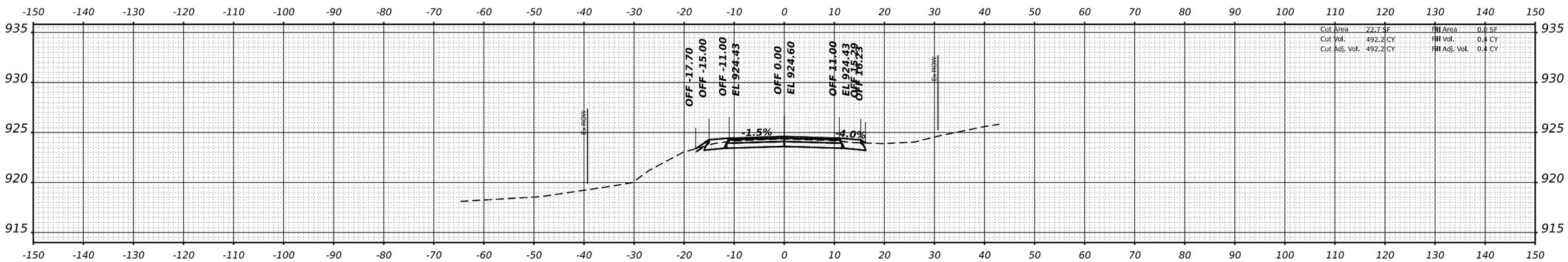

STA 22+50.00

FINAL SURVEY		BY	DATE
NOTE BOOK	SURVEYED		
	PLOTTED		
	TEMPLATE		
	AREAS		
NO.	AREAS CHECKED		

ORIGINAL SURVEY		BY	DATE
NOTE BOOK	SURVEYED		
	PLOTTED		
	TEMPLATE		
	AREAS		
NO.	AREAS CHECKED		

MODEL: P_MUIRHEAD - 22+50.00 [Sheet]
FILE NAME: P:\2022\220616\Cad\02 Design\CADD_Sheets\220616-sht-xs_Muirhead.dgn

HAMPTON, LENZINI AND RENWICK, INC.
1707 N RANDALL ROAD, SUITE 100
ELGIN, ILLINOIS 60123
ILLINOIS PROFESSIONAL DESIGN FIRM
LS / PE / SE CORP. 184.000959

USER NAME = ajungermann	DESIGNED -	REVISED -	
	DRAWN -	REVISED -	
PLOT SCALE = 0.16666633 ' / in.	CHECKED -	REVISED -	
PLOT DATE = 3/18/2025	DATE -	REVISED -	

PLATO TOWNSHIP
ROAD DISTRICT

MUIRHEAD ROAD OVER CHICAGO, CENTRAL AND PACIFIC RAILROAD

SCALE: | SHEET OF SHEETS | STA.

F.A. RTE.	SECTION	COUNTY	TOTAL SHEETS	SHEET NO.
	17-12082-01-BR	KANE	88	80
		CONTRACT NO. 61K26		
		ILLINOIS	FED. AID PROJECT	

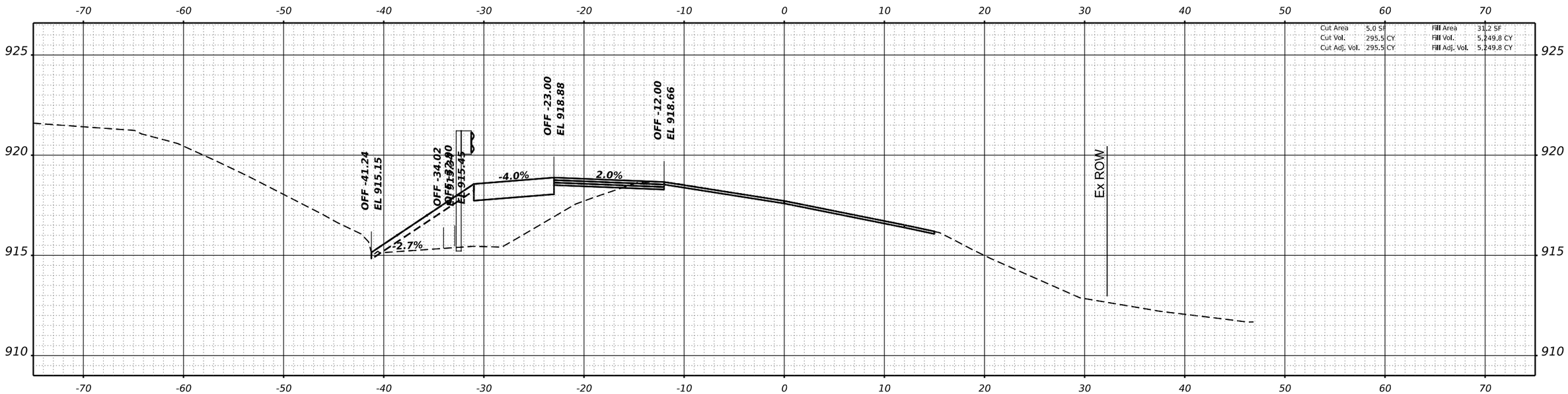

STA 110+50.00

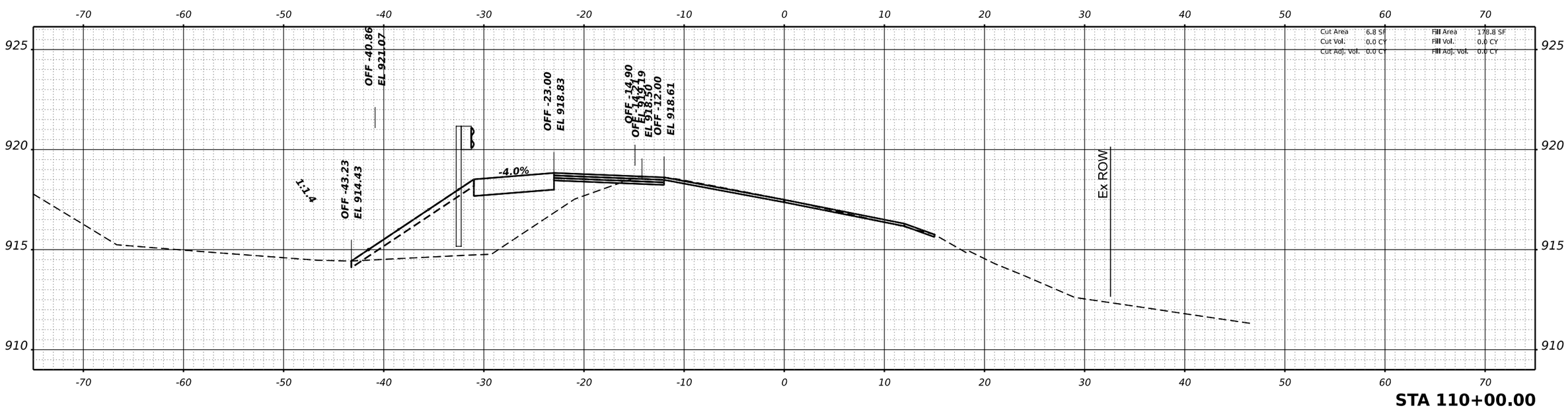

STA 110+00.00

FINAL SURVEY		BY	DATE
NOTE BOOK	SURVEYED		
	PLOTTED		
	TEMPLATE		
	AREAS		
NO.	AREAS CHECKED		

ORIGINAL SURVEY		BY	DATE
NOTE BOOK	SURVEYED		
	PLOTTED		
	TEMPLATE		
	AREAS		
NO.	AREAS CHECKED		

MODEL: E_PLATO - 110+00.00-3 [Sheet]
FILE NAME: P:\2022\220616\Cad\02 Design\CADD_Sheets\220616sht-xs_Plato.dgn

HAMPTON, LENZINI AND RENWICK, INC.
1707 N RANDALL ROAD, SUITE 100
ELGIN, ILLINOIS 60123
ILLINOIS PROFESSIONAL DESIGN FIRM
LS / PE / SE CORP. 184.000959

USER NAME = ajungermann	DESIGNED -	REVISED -
	DRAWN -	REVISED -
PLOT SCALE = 0.16666633 ' / in.	CHECKED -	REVISED -
PLOT DATE = 3/18/2025	DATE -	REVISED -

PLATO TOWNSHIP ROAD DISTRICT

MUIRHEAD ROAD OVER CHICAGO, CENTRAL AND PACIFIC RAILROAD

SCALE: SHEET OF SHEETS STA.

F.A. RTE.	SECTION	COUNTY	TOTAL SHEETS	SHEET NO.
	17-12082-01-BR	KANE	88	81
		CONTRACT NO. 61K26		
	ILLINOIS	FED. AID PROJECT		

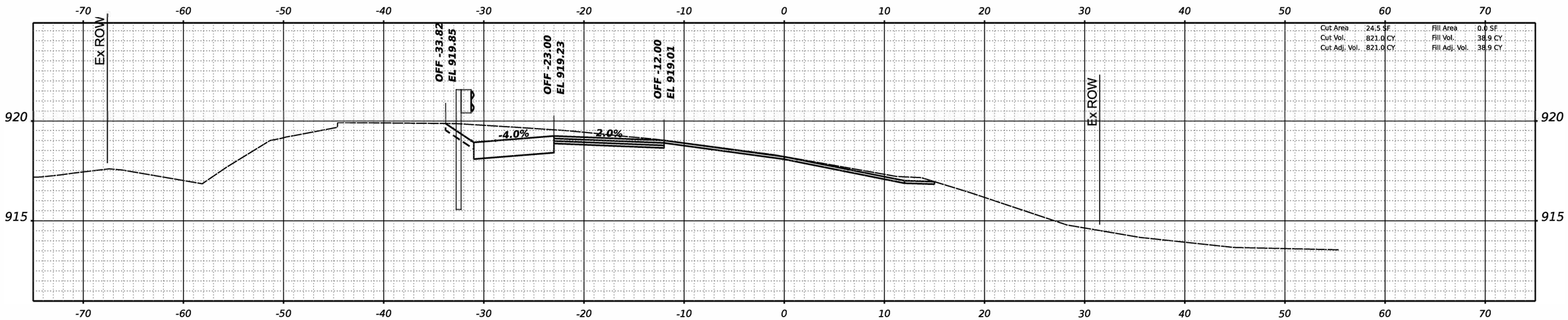

STA 111+50.00

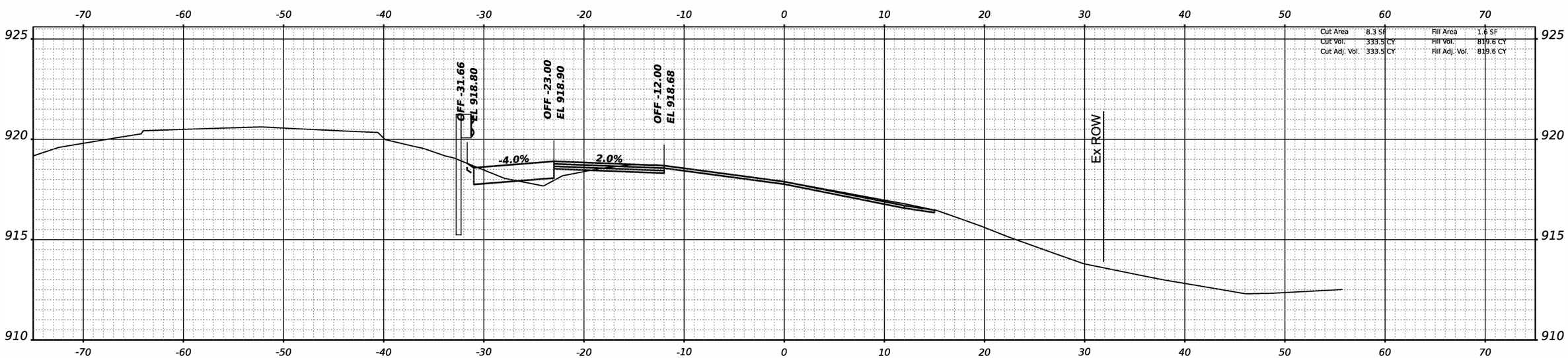

STA 111+00.00

FINAL SURVEY	BY	DATE
SURVEYED		
PLOTTED		
TEMPLATE		
AREAS		
AREAS CHECKED		
NOTE BOOK NO.		

ORIGINAL SURVEY	BY	DATE
SURVEYED		
PLOTTED		
TEMPLATE		
AREAS		
AREAS CHECKED		
NOTE BOOK NO.		

MODEL: E_PLATO - 111+00.00-3 [Sheet]
FILE NAME: P:\2022\220616\Cad\02 Design\CADD_Sheets\220616-sht-xs_Plato.dgn

HAMPTON, LENZINI AND RENWICK, INC.
1707 N RANDALL ROAD, SUITE 100
ELGIN, ILLINOIS 60123
ILLINOIS PROFESSIONAL DESIGN FIRM
LS / PE / SE CORP. 184.000959

USER NAME = ajungermann	DESIGNED -	REVISED -	
	DRAWN -	REVISED -	
PLOT SCALE = 0.16666633 ' / in.	CHECKED -	REVISED -	
PLOT DATE = 3/18/2025	DATE -	REVISED -	

PLATO TOWNSHIP
ROAD DISTRICT

MUIRHEAD ROAD OVER CHICAGO, CENTRAL AND PACIFIC RAILROAD

SCALE: | SHEET OF SHEETS | STA.

F.A. RTE.	SECTION	COUNTY	TOTAL SHEETS	SHEET NO.
	17-12082-01-BR	KANE	88	82
		CONTRACT NO. 61K26		
	ILLINOIS	FED. AID PROJECT		

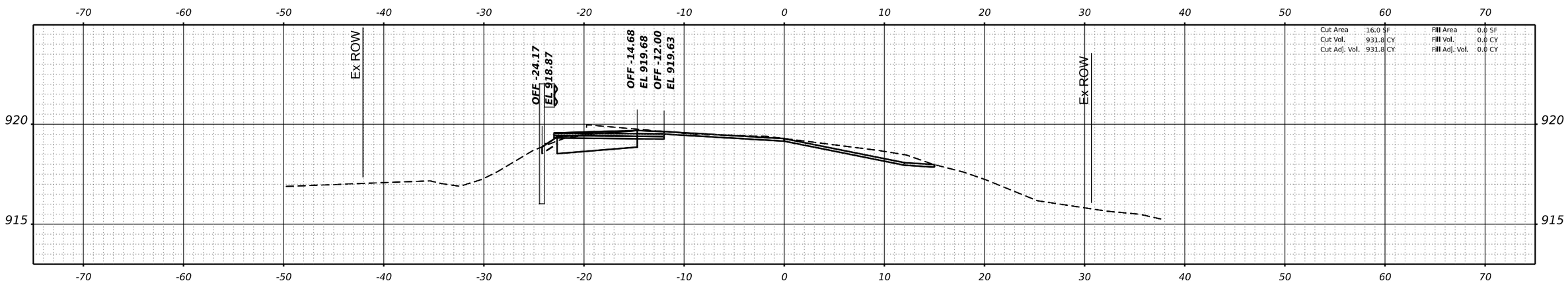

STA 112+50.00

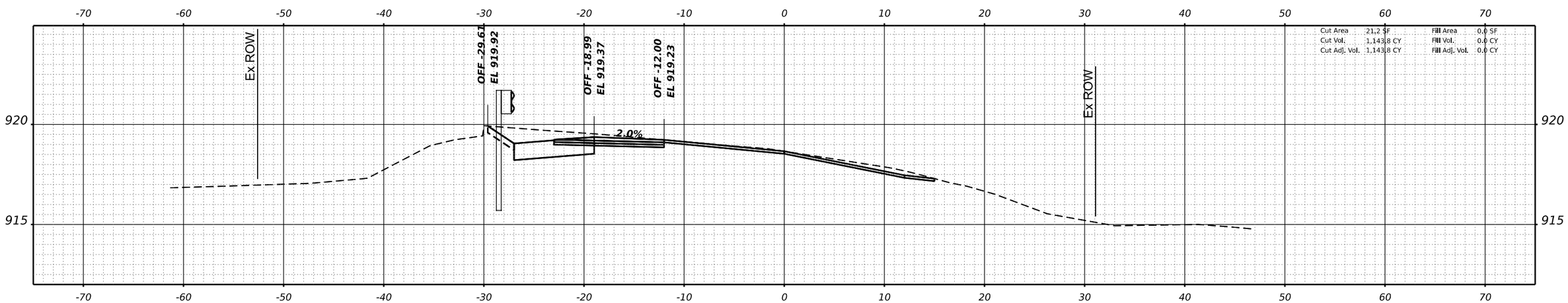

STA 112+00.00

FINAL SURVEY	BY	DATE
SURVEYED		
PLOTTED		
TEMPLATE		
AREAS		
AREAS CHECKED		
NOTE BOOK NO.		

ORIGINAL SURVEY	BY	DATE
SURVEYED		
PLOTTED		
TEMPLATE		
AREAS		
AREAS CHECKED		
NOTE BOOK NO.		

MODEL: F_PLATO - 112+00.00-3 [Sheet]
FILE NAME: P:\2022\220616\Cad\02 Design\CADD_Sheets\220616-sht-xs_Plato.dgn

HAMPTON, LENZINI AND RENWICK, INC.
1707 N RANDALL ROAD, SUITE 100
ELGIN, ILLINOIS 60123
ILLINOIS PROFESSIONAL DESIGN FIRM
LS / PE / SE CORP. 184.000959

USER NAME = ajungermann	DESIGNED -	REVISED -	
	DRAWN -	REVISED -	
PLOT SCALE = 0.16666633 ' / in.	CHECKED -	REVISED -	
PLOT DATE = 3/18/2025	DATE -	REVISED -	

PLATO TOWNSHIP ROAD DISTRICT

MUIRHEAD ROAD OVER CHICAGO, CENTRAL AND PACIFIC RAILROAD

SCALE: SHEET OF SHEETS STA.

F.A. RTE.	SECTION	COUNTY	TOTAL SHEETS	SHEET NO.
	17-12082-01-BR	KANE	88	83
		CONTRACT NO. 61K26		
		ILLINOIS	FED. AID PROJECT	

FINAL SURVEY		BY	DATE
NOTE BOOK	SURVEYED		
	PLOTTED		
	TEMPLATE		
	AREAS		
NO.	AREAS CHECKED		

ORIGINAL SURVEY		BY	DATE
NOTE BOOK	SURVEYED		
	PLOTTED		
	TEMPLATE		
	AREAS		
NO.	AREAS CHECKED		

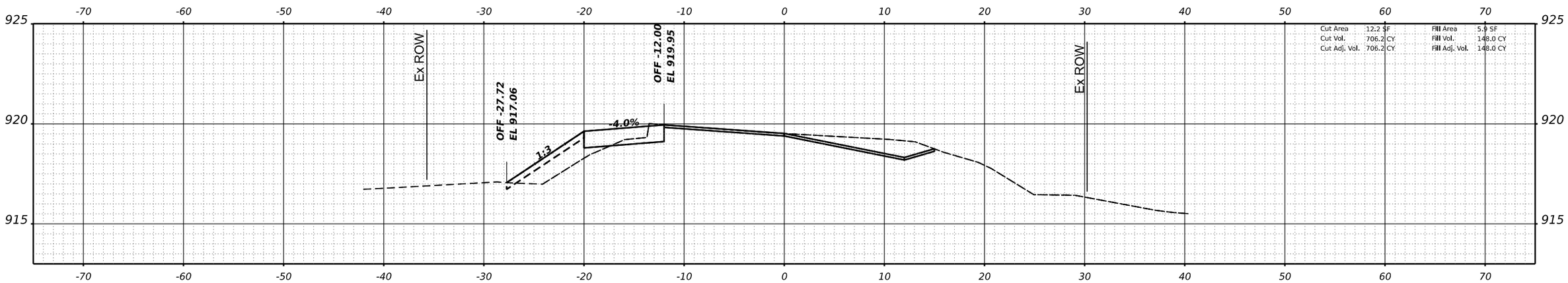

STA 113+00.00

MODEL: E_PLATO - 113+00.00-3 [Sheet]
FILE NAME: P:\2022\220610\Cad\02 Design\CADD_Sheets\220610-sht-xs_Plato.dgn

HAMPTON, LENZINI AND RENWICK, INC.
5707 N RANDALL ROAD, SUITE 100
ELGIN, ILLINOIS 60123
ILLINOIS PROFESSIONAL DESIGN FIRM
LS / PE / SE CORP. 184.000959

USER NAME = ajungermann	DESIGNED -	REVISED -
	DRAWN -	REVISED -
PLOT SCALE = 0.16666633 ' / in.	CHECKED -	REVISED -
PLOT DATE = 3/18/2025	DATE -	REVISED -

PLATO TOWNSHIP ROAD DISTRICT

MUIRHEAD ROAD OVER CHICAGO, CENTRAL AND PACIFIC RAILROAD

SCALE: SHEET OF SHEETS STA.

F.A. RTE.	SECTION	COUNTY	TOTAL SHEETS	SHEET NO.
	17-12082-01-BR	KANE	88	84
		CONTRACT NO. 61K26		
	ILLINOIS	FED. AID PROJECT		

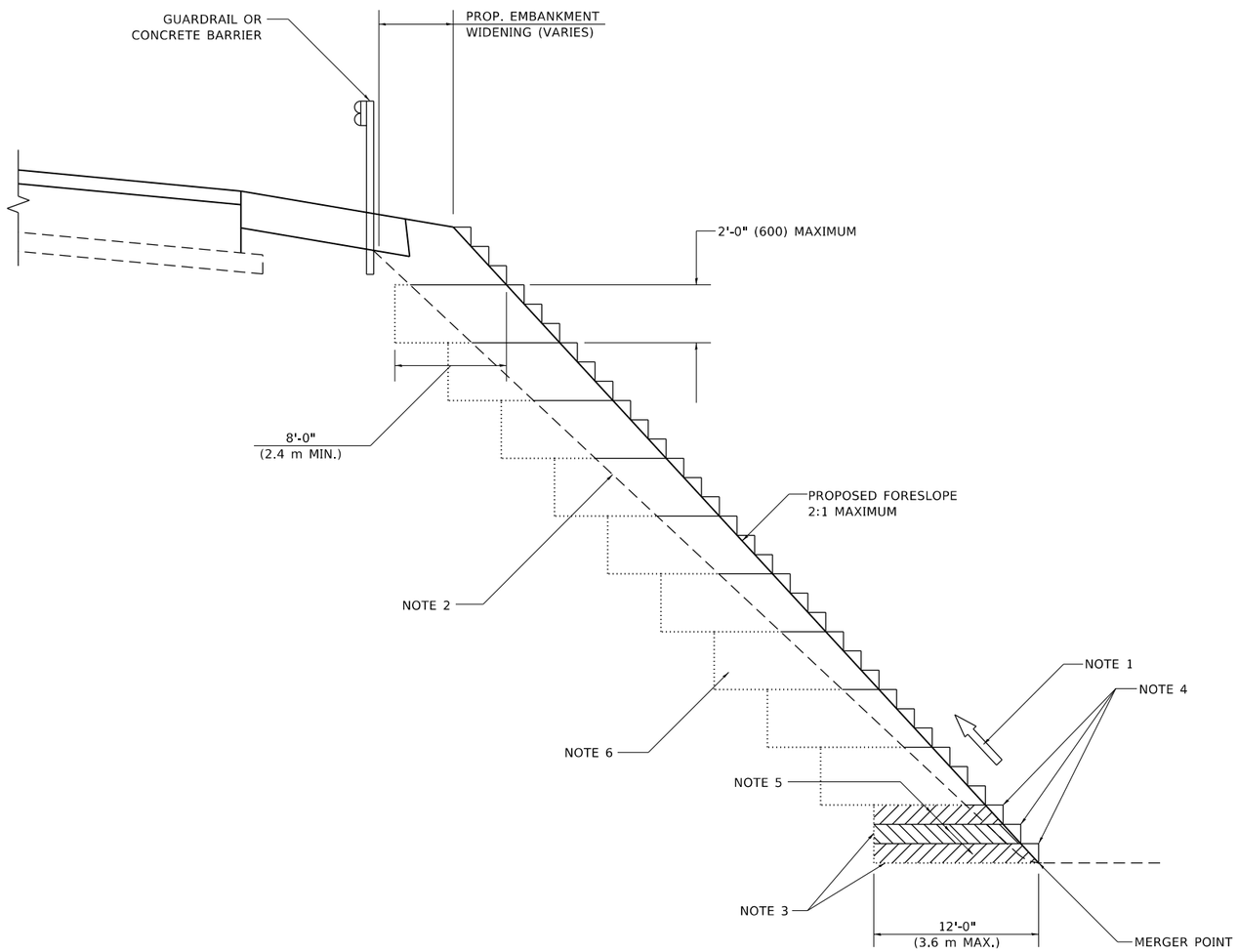

TYPICAL BENCHING DETAIL FOR EMBANKMENT

GENERAL NOTES

1. CONSTRUCT SUCCEEDING BENCH CUTS AND EMBANKMENT PLACEMENT AND COMPACTION FROM BOTTOM TO TOP IN STAIRSTEP FASHION.
2. EXISTING FORESLOPE PREPARED IN ACCORDANCE WITH ARTICLE 205.03 OF THE STANDARD SPECIFICATIONS.
3. BENCH CUT EXISTING SLOPE TYPICAL FOR EACH STEP.
4. TRIM TO FINAL SLOPE.
5. EQUAL 8-INCH (200) LIFTS OF EMBANKMENT COMPACTED IN ACCORDANCE WITH ARTICLE 205.05 OF THE STANDARD SPECIFICATIONS.

BASIS OF PAYMENT

1. EXCAVATION OF BENCH CUTS WITHIN EXISTING EMBANKMENT WILL BE PAID FOR AT THE CONTRACT UNIT PRICE PER CUBIC METER OR CUBIC YARD FOR "EARTH EXCAVATION". THIS PRICE WILL INCLUDE ALL LABOR AND MATERIAL, NO ADDITIONAL COMPENSATION WILL BE ALLOWED.

ALL DIMENSIONS ARE IN INCHES (MILLIMETERS) UNLESS OTHERWISE SHOWN.

MODEL: Default
FILE NAME: pw:\\ildot-pw.bentley.com:PWIDOT\Documents\IDOT Offices\District 1\Projects\D1ISd22x34\CADData\CADsheets\bd51.dgn

USER NAME = Lawrence.DeManche	DESIGNED -	REVISED - K. SMITH 11-18-22	STATE OF ILLINOIS DEPARTMENT OF TRANSPORTATION	BENCHING DETAIL FOR EMBANKMENT WIDENING			F.A. RTE.	SECTION	COUNTY	TOTAL SHEETS	SHEET NO.
	DRAWN - CADD	REVISED -								88	85
PLOT SCALE = 100.0000 ' / in.	CHECKED - S.E.B.	REVISED -					BD-51		CONTRACT NO. 61K26		
PLOT DATE = 11/18/2022	DATE - 06-16-04	REVISED -		SCALE: NONE	SHEET 1 OF 1 SHEETS	STA. TO STA.			ILLINOIS FED. AID PROJECT		

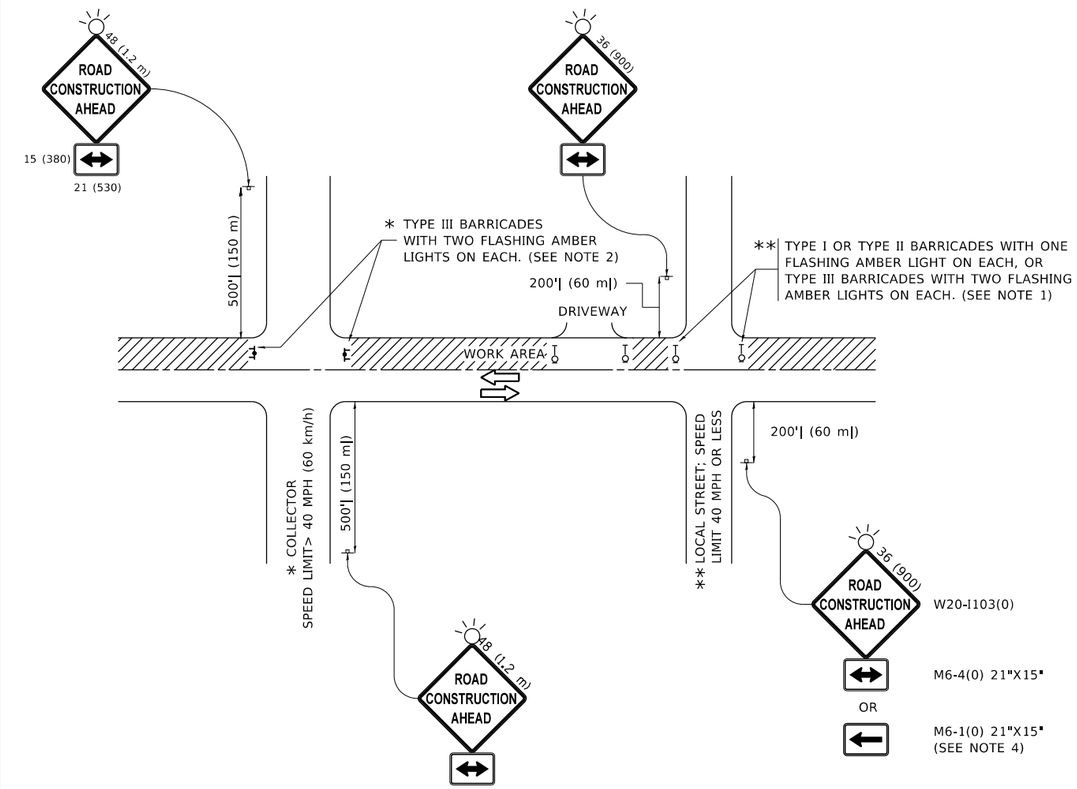

NOTES:

1. SIDE ROAD WITH A SPEED LIMIT OF 40 MPH (60 km/h) OR LESS AS SHOWN ON THE DRAWING AND AS DIRECTED BY THE ENGINEER:

   a) ONE "ROAD CONSTRUCTION AHEAD" SIGN 36 x 36 (900x900) WITH A FLASHER MOUNTED ON IT APPROXIMATELY 200' (60 m) IN ADVANCE OF THE MAIN ROUTE.

   b) THE CLOSED PORTION OF THE MAIN ROUTE SHALL BE PROTECTED BY BLOCKING WITH TYPE I, TYPE II OR TYPE III BARRICADES, 1/3 OF THE CROSS SECTION OF THE CLOSED PORTION.

2. SIDE ROAD WITH A SPEED LIMIT GREATER THAN 40 MPH (60 km/h) AS SHOWN ON THE DRAWING AND AS DIRECTED BY THE ENGINEER:

   a) ONE "ROAD CONSTRUCTION AHEAD" SIGN 48 x 48 (1.2 m x 1.2 m) WITH A FLASHER MOUNTED ON IT APPROXIMATELY 500' (150 m) IN ADVANCE OF THE MAIN ROUTE.

   b) THE CLOSED PORTION OF THE MAIN ROUTE SHALL BE PROTECTED BY BLOCKING WITH TYPE III BARRICADES, 1/2 OF THE CROSS SECTION OF THE CLOSED PORTION.

3. CONES MAY BE SUBSTITUTED FOR BARRICADES OR DRUMS AT HALF THE SPACING DURING DAY OPERATIONS. CONES SHALL BE A MINIMUM OF 28 (710) IN HEIGHT.

4. WHEN THE SIDE ROAD LIES BETWEEN THE BEGINNING OF THE MAINLINE SIGNING AND THE WORK ZONE, A SINGLE HEADED ARROW (M6-1) SHALL BE USED IN LIEU OF THE DOUBLE HEADED ARROW (M6-4).

5. WHEN WORK IS BEING PERFORMED ON A SIDE ROAD OR DRIVEWAY, FOLLOW THE APPLICABLE STANDARD(S). THE DIRECTIONAL ARROW (M6-1 OR M6-4) SHALL BE COVERED OR REMOVED WHEN NO LONGER CONSISTENT WITH THE TRAFFIC CONTROL SET-UP.

6. ADVANCE WARNING SIGNS ARE TO BE OMITTED ON DRIVEWAYS UNLESS OTHERWISE SPECIFIED IN THE PLANS OR BY THE ENGINEER.

7. THE TRAFFIC CONTROL AND PROTECTION FOR SIDE ROADS, INTERSECTIONS, AND DRIVEWAYS SHALL BE INCLUDED IN THE COST OF SPECIFIED TRAFFIC CONTROL STANDARDS OR ITEMS.

All dimensions are in inches (millimeters) unless otherwise shown.

MODEL: Default
FILE NAME: pw:\\ildot-pw.bentley.com:PWIDOT\Documents\IDOT Offices\District 1\Projects\D1c51022x34\CADData\CADsheets\tc10.dgn

USER NAME = Lawrence.DeManche	DESIGNED - L.H.A.	REVISED - T. RAMMACHER 01-06-00	STATE OF ILLINOIS DEPARTMENT OF TRANSPORTATION
	DRAWN -	REVISED - A. SCHUETZE 07-01-13	
PLOT SCALE = 100.0000 ' / in.	CHECKED -	REVISED - A. SCHUETZE 09-15-16	
PLOT DATE = 5/3/2024	DATE - 06-89	REVISED - D. SENDERAK 05-03-24	

TRAFFIC CONTROL AND PROTECTION FOR SIDE ROADS, INTERSECTIONS, AND DRIVEWAYS

SCALE: NONE | SHEET 1 OF 1 SHEETS | STA. TO STA.

F.A. RTE.	SECTION	COUNTY	TOTAL SHEETS	SHEET NO.
			88	86
	TC-10	CONTRACT NO. 61K26		
		ILLINOIS	FED. AID PROJECT	

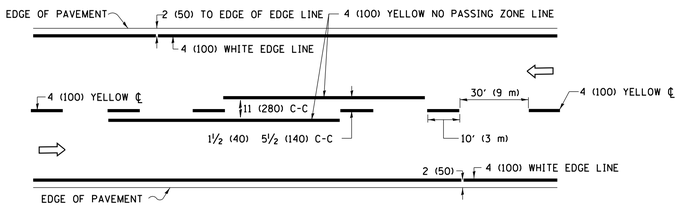

2–LANE ROADWAY

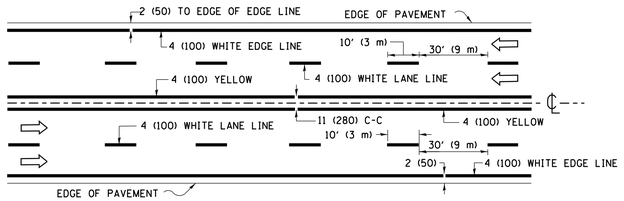

MULTI–LANE UNDIVIDED

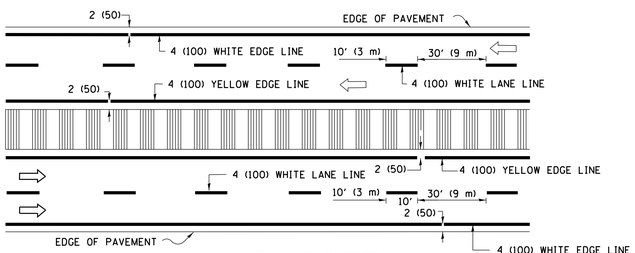

MULTI–LANE DIVIDED
WITH MEDIAN

TYPICAL LANE AND EDGE LINE MARKING

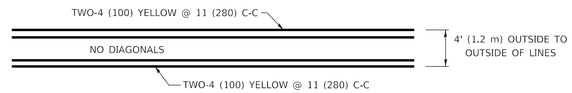

4' (1.2 m) WIDE MEDIANS ONLY

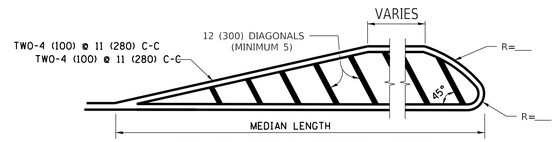

FOR MEDIAN LENGTHS WHERE DIAGONAL SPACING CANNOT BE ATTAINED, USE 5 (FIVE) EQUALLY SPACED DIAGONAL LINES.

DIAGONAL LINE SPACING: 50' (15 m) C-C (LESS THAN 30MPH (50 km/h))
75' (25 m) C-C 30MPH (50 km/h) TO 45MPH (70 km/h))
150' (45 m) C-C (MORE THAN 45MPH (70 km/h))

MEDIANS OVER 4' (1.2 m) WIDE

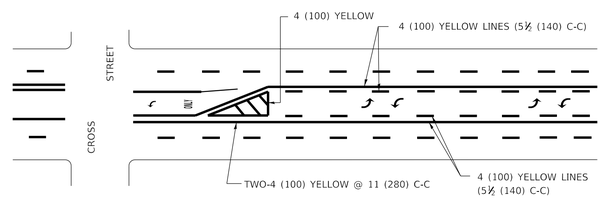

A MINIMUM OF TWO PAIRS OF TURN ARROWS SHALL BE USED, WHITE IN COLOR. ADDITIONAL PAIRS SHALL BE PLACED AT 200' (60 m) TO 300' (90 m) INTERVALS.

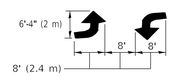

MEDIAN WITH TWO–WAY LEFT TURN LANE

TYPICAL PAINTED MEDIAN MARKING

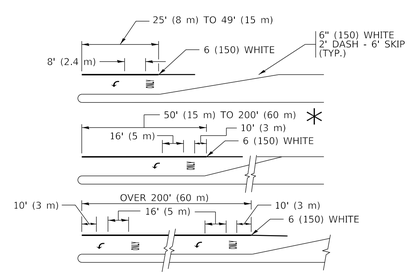

FULL SIZE LETTERS 8' (2.4 m) AND ARROWS SHALL BE USED.
AREA = 15.6 SQ. FT. (1.5 m²) **ONLY** AREA = 20.8 SQ. FT. (1.9 m²)

✳ TURN LANES IN EXCESS OF 400' (120 m) IN LENGTH MAY HAVE AN ADDITIONAL SET OF ARROW - "ONLY" INSTALLED MIDWAY BETWEEN THE OTHER TWO SETS OF ARROW - "ONLY".

TYPICAL LEFT (OR RIGHT) TURN LANE

TYPICAL TURN LANE MARKING

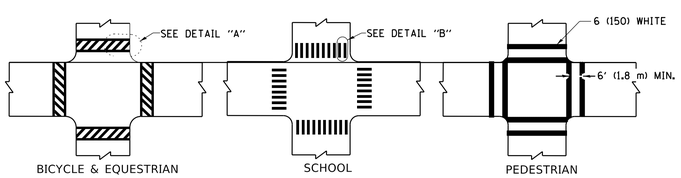

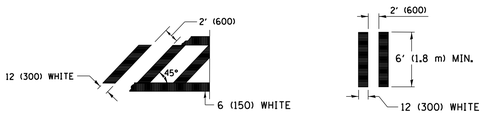

DETAIL "A" **DETAIL "B"**

TYPICAL CROSSWALK MARKING

✳ MARKINGS SHALL BE INSTALLED PARALLEL TO THE CENTERLINE OF THE ROAD WHICH IT CROSSES

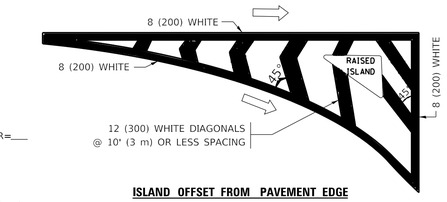

ISLAND OFFSET FROM PAVEMENT EDGE

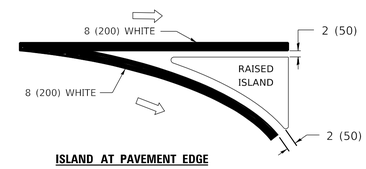

ISLAND AT PAVEMENT EDGE

TYPICAL ISLAND MARKING

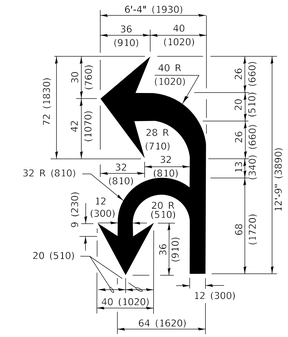

COMBINATION LEFT AND U–TURN

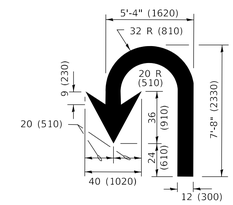

U–TURN

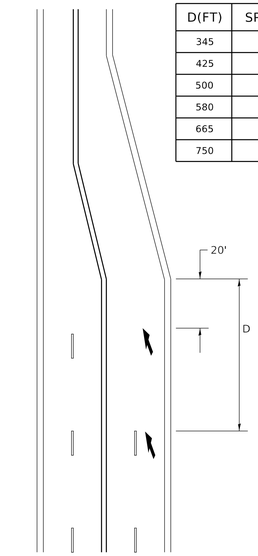

D(FT)	SPEED LIMIT
345	30
425	35
500	40
580	45
665	50
750	55

LANE REDUCTION TRANSITION

✳ LANE REDUCTION ARROWS REQUIRED AT SPEEDS OF 45 MPH OR GREATER OR WHEN SPECIFIED IN PLANS.

TYPE OF MARKING	WIDTH OF LINE	PATTERN	COLOR	SPACING / REMARKS
CENTERLINE ON 2 LANE PAVEMENT	4 (100)	SKIP-DASH	YELLOW	10' (3 m) LINE WITH 30' (9 m) SPACE
CENTERLINE ON MULTI-LANE UNDIVIDED PAVEMENT	2 @ 4 (100)	SOLID	YELLOW	11 (280) C-C
NO PASSING ZONE LINES: FOR ONE DIRECTION FOR BOTH DIRECTIONS	4 (100) 2 @ 4 (100)	SOLID SOLID	YELLOW YELLOW	5½ (140) C-C FROM SKIP-DASH CENTERLINE 11 (280) C-C OMIT SKIP-DASH CENTERLINE BETWEEN
LANE LINES	4 (100) 5 (125) ON FREEWAYS	SKIP-DASH SKIP-DASH	WHITE WHITE	10' (3 m) LINE WITH 30' (9 m) SPACE
DOTTED LINES (EXTENSIONS OF CENTER, LANE OR TURN LANE MARKINGS)	SAME AS LINE BEING EXTENDED	SKIP-DASH	SAME AS LINE BEING EXTENDED	2' (600) LINE WITH 6' (1.8 m) SPACE
EDGE LINES	4 (100)	SOLID	YELLOW-LEFT WHITE-RIGHT	OUTLINE MEDIANS IN YELLOW
TURN LANE MARKINGS	6 (150) LINE; FULL SIZE LETTERS & SYMBOLS (8' (2.4m))	SOLID	WHITE	SEE TYPICAL TURN LANE MARKING DETAIL
TWO WAY LEFT TURN MARKING	2 @ 4 (100) EACH DIRECTION 8' (2.4m) LEFT ARROW	SKIP-DASH AND SOLID IN PAIRS	YELLOW WHITE	10' (3 m) LINE WITH 30' (9 m) SPACE FOR SKIP-DASH; 5½ (140) C-C BETWEEN SOLID LINE AND SKIP-DASH LINE SEE TYPICAL TWO-WAY LEFT TURN MARKING DETAIL
CROSSWALK LINES (PEDESTRIAN) A. DIAGONALS (BIKE & EQUESTRIAN) B. LONGITUDINAL BARS (SCHOOL)	2 @ 6 (150) 12 (300) @ 45° 12 (300) @ 90°	SOLID SOLID SOLID	WHITE WHITE WHITE	NOT LESS THAN 6' (1.8 m) APART 2' (600) APART 2' (600) APART SEE TYPICAL CROSSWALK MARKING DETAILS.
STOP LINES	24 (600)	SOLID	WHITE	PLACE 4' (1.2 m) IN ADVANCE OF AND PARALLEL TO CROSSWALK, IF PRESENT. OTHERWISE, PLACE AT DESIRED STOPPING POINT. PARALLEL TO CROSSROAD CENTERLINE, WHERE POSSIBLE
PAINTED MEDIANS	2 @ 4 (100) WITH 12 (300) DIAGONALS @ 45° NO DIAGONALS USED FOR 4' (1.2 m) WIDE MEDIANS	SOLID	YELLOW: TWO WAY TRAFFIC WHITE: ONE WAY TRAFFIC	11 (280) C-C FOR THE DOUBLE LINE SEE TYPICAL PAINTED MEDIAN MARKING.
GORE MARKING AND CHANNELIZING LINES	8 (200) WITH 12 (300) DIAGONALS @ 45°	SOLID	WHITE	DIAGONALS: 15' (4.5 m) C-C (LESS THAN 30MPH (50 km/h)) 20' (6 m) C-C 30MPH (50 km/h) TO 45MPH (70 km/h)) 30' (9 m) C-C (OVER 45MPH (70 km/h))
RAILROAD CROSSING	24 (600) TRANSVERSE LINES; "RR" IS 6' (1.8 m) LETTERS; 16 (400) LINE FOR "X"	SOLID	WHITE	SEE STATE STANDARD 780001 AREA OF: "R"=3.6 SQ. FT. (0.33 m²) EACH "X"=54.0 SQ. FT. (5.0 m²)
SHOULDER DIAGONALS (REQUIRED FOR SHOULDERS ≥ 8')	12 (300) @ 45°	SOLID	WHITE - RIGHT YELLOW - LEFT	50' (15 m) C-C (LESS THAN 30MPH (50 km/h)) 75' (25 m) C-C (30 MPH (50 km/h) TO 45MPH (70 km/h)) 150' (45 m) C-C (OVER 45MPH (70 km/h))
U TURN ARROW	SEE DETAIL	SOLID	WHITE	16.3 SF
2 ARROW COMBINATION LEFT AND U TURN	SEE DETAIL	SOLID	WHITE	30.4 SF

FOR FURTHER DETAILS ON PAVEMENT MARKING REFER TO STANDARD SPECIFICATIONS FOR ROAD AND BRIDGE CONSTRUCTION AND STATE STANDARD 780001.

All dimensions are in inches (millimeters) unless otherwise shown.

MODEL: Default
FILE NAME: pw:\\IL084EBIDINTEG.illinois.gov:PWIDOT\Documents\IDOT Offices\District 1\Projects\D1st5d22.34\CADData\CADsheets\tc13.dgn

USER NAME = footemj	DESIGNED - EVERS	REVISED - C. JUCIUS 09-09-09	STATE OF ILLINOIS DEPARTMENT OF TRANSPORTATION	DISTRICT ONE TYPICAL PAVEMENT MARKINGS	F.A. RTE. / SECTION / COUNTY / TOTAL SHEETS 88 / SHEET NO. 87
	DRAWN -	REVISED - C. JUCIUS 07-01-13			
PLOT SCALE = 50.0000 ' / in.	CHECKED -	REVISED - C. JUCIUS 12-21-15			TC–13 / CONTRACT NO. 61K26
PLOT DATE = 3/4/2019	DATE - 03-19-90	REVISED - C. JUCIUS 04-12-16		SCALE: NONE / SHEET 1 OF 2 SHEETS / STA. TO STA.	ILLINOIS / FED. AID PROJECT

tc13.dgn 3/4/2019 10:34:37 AM User=footemj

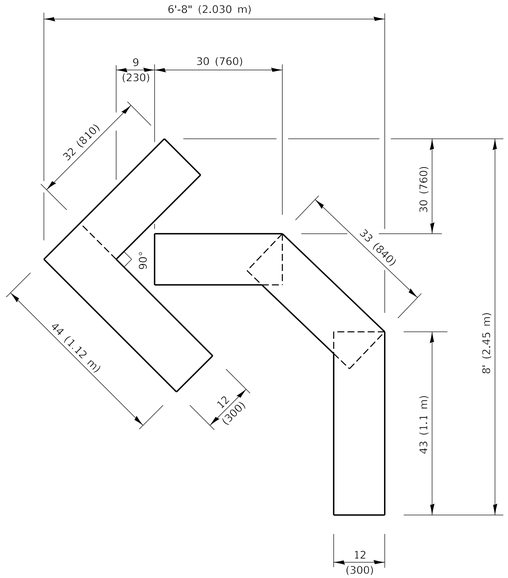

QUANTITY

4 (100) LINE = 45.5 ft. (13.9 m)
15.2 sq. ft. (1.41 sq. m)

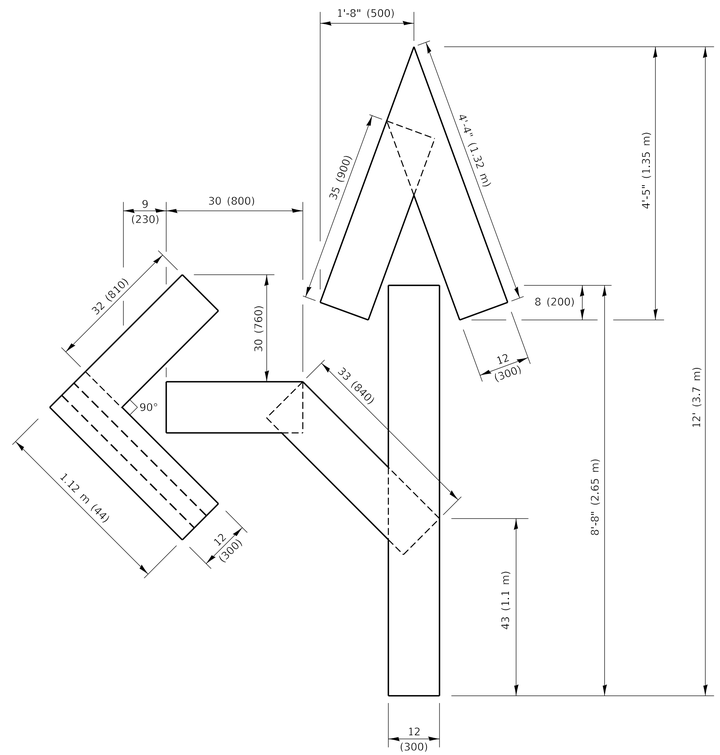

QUANTITY

4 (100) LINE = 82.5 ft. (25.1 m)
27.5 sq. ft. (2.53 sq. m)

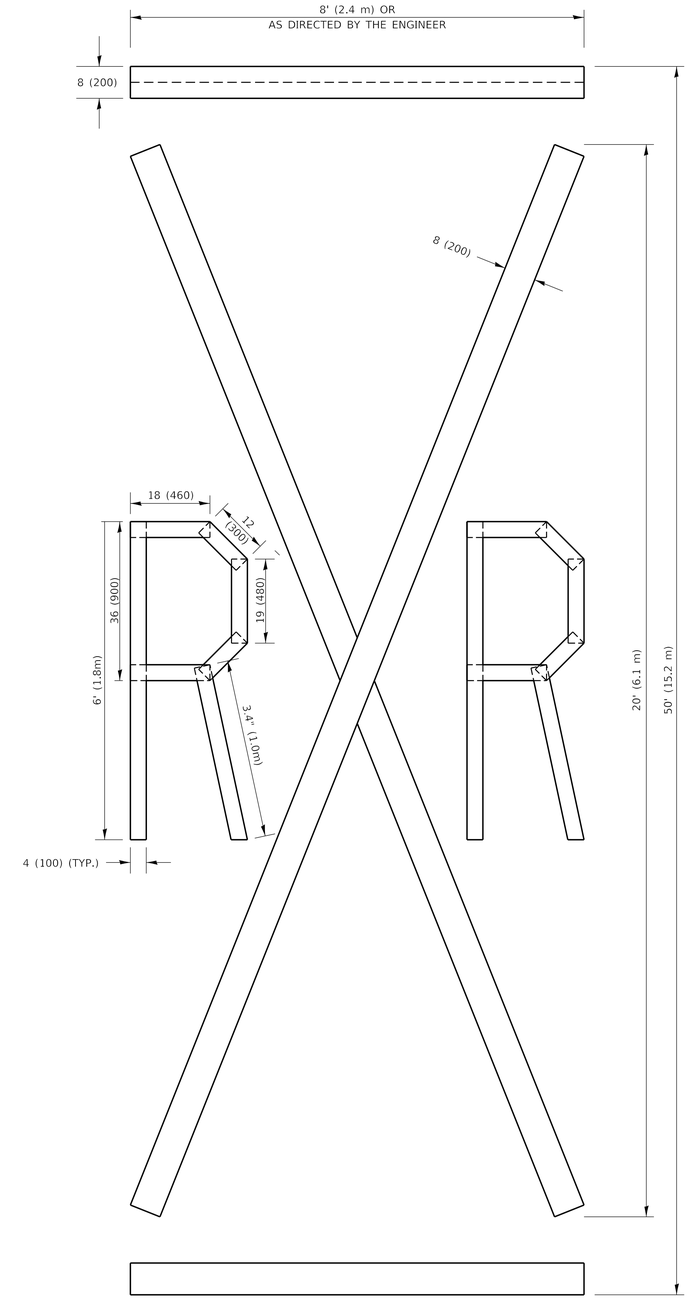

QUANTITY

4 (100) LINE = 225.9 ft. (68.9 m)
75.3 sq. ft. (6.99 sq. m)

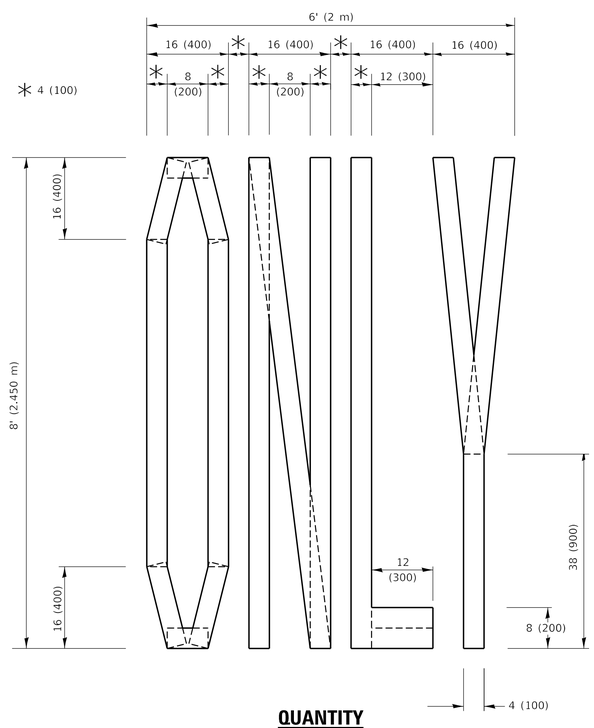

QUANTITY

4 (100) LINE = 64.1 ft. (19.5 m)
21.4 sq. ft. (1.99 sq. m)

NOTE:

ALL QUANTITIES OF PLACEMENT ARE REPRESENTED IN LINEAR FEET OF 4" LINES TO MATCH THE 4" TEMPORARY TAPE PAY ITEM AND REPRESENTS THE TOTAL QUANTITY OF 4" TAPE REQUIRED.

All dimensions are in inches (millimeters) unless otherwise shown.

MODEL: Default
FILE NAME: pw:\\IL084EBIDINTEG.illinois.gov:PWIDOT\Documents\IDOT Offices\District 1\Projects\Dist-Std22x34\CADData\CADsheets\tc16.dgn

USER NAME = footemj	DESIGNED -	REVISED - T. RAMMACHER 03-02-98	STATE OF ILLINOIS DEPARTMENT OF TRANSPORTATION
	DRAWN -	REVISED - E. GOMEZ 08-28-00	
PLOT SCALE = 50.0068 ' / in.	CHECKED -	REVISED - E. GOMEZ 08-28-00	
PLOT DATE = 3/4/2019	DATE - 09-18-94	REVISED - A. SCHUETZE 09-15-16	

SHORT TERM PAVEMENT MARKING LETTERS AND SYMBOLS

SCALE: NONE | SHEET 1 OF 1 SHEETS | STA. TO STA.

F.A. RTE.	SECTION	COUNTY	TOTAL SHEETS	SHEET NO.
			88	88
	TC–16	CONTRACT NO. 61K26		
	ILLINOIS	FED. AID PROJECT		

tc16.dgn 3/4/2019 10:37:35 AM User=footemj