F.A.U. RTE.	SECTION	COUNTY	TOTAL SHEETS	SHEET NO.
7824	21-00340-00-RS	ADAMS	34	1

INDEX OF SHEETS

SEE SHEET #2

04-25-2025 LETTING ITEM 162

HIGHWAY STANDARDS

SEE SHEET #2

DESIGN DESIGNATIONS

FAU 7824 (SOUTH 18TH STREET): URBAN MAJOR COLLECTOR

ADT = 4900 (2014); DESIGN SPEED: 30 MPH

PROJECT DESCRIPTION

PROJECT CONSISTS OF MILLING AND OVERLAY, CURB REPAIR, PATCHING, PCC SIDEWALK REPLACEMENT, ADA SIDEWALK RAMPS ALONG WITH OTHER MISCELLANEOUS APPURTENANCES.

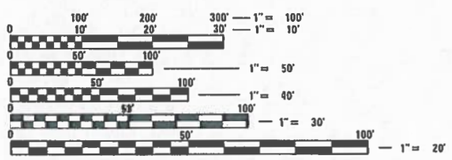

FULL SIZE PLANS HAVE BEEN PREPARED USING STANDARD ENGINEERING SCALES. REDUCED SIZED PLANS WILL NOT CONFORM TO STANDARD SCALES. IN MAKING MEASUREMENTS ON REDUCED PLANS, THE ABOVE SCALES MAY BE USED.

J.U.L.I.E.
JOINT UTILITY LOCATION INFORMATION FOR EXCAVATION
1-800-892-0123
OR 811

UTILITIES	
AT&T (TELEPHONE)	1-309-757-5762
AMEREN IL (ELECTRIC & GAS)	1-888-659-4540
COMCAST (CABLE)	1-800-934-6489
CITY OF QUINCY (SEWER & SIGNALS)	1-217-228-4527
ADAMS (FIBER)	1-217-214-3423

CONTRACT NO. 93830

STATE OF ILLINOIS
DEPARTMENT OF TRANSPORTATION

PLANS FOR PROPOSED SOUTH 18TH STREET – HARRISON to OHIO RESURFACING

FAU ROUTE 7824

CITY OF QUINCY, ADAMS COUNTY, ILLINOIS

JOB NUMBER C-96-015-25
SECTION 21-00340-00-RS
PROJECT #: H17J(501)

FUNDING – STU /MFT

LOCATION MAP

LENGTH OF IMPROVEMENT = 4,127.2 FT (0.78 MILES)

LOCATION OF SECTION INDICATED THUS: –

CITY of QUINCY, ILL. INCORPORATED A.D. 1840

PLANS PREPARED BY THE CITY OF QUINCY
DEPARTMENT OF UTILITIES
AND ENGINEERING

STEVE E. BANGE
062-053338
LICENSED
PROFESSIONAL
ENGINEER
ILLINOIS

Steve E. Bange 1/3/25

STEVE E. BANGE, P.E. DATE
REGISTERED PROFESSIONAL ENGINEER
STATE OF ILLINOIS NO 062-053338
LICENSE EXPIRES NOVEMBER 30, 2025

STATE OF ILLINOIS
DEPARTMENT OF TRANSPORTATION

APPROVED 1/6 2025
Mustafa A. Ding
CITY OF QUINCY, MAYOR

PASSED 1-9- 2025
DISTRICT 6 ENGINEER OF LOCAL ROADS AND STREETS

RELEASED FOR BID 1-9 2025
BASED ON LIMITED REVIEW
REGION FOUR ENGINEER

INDEX OF SHEETS

1	COVER SHEET
2	INDEX OF SHEETS, HIGHWAY STANDARDS, & GENERAL NOTES
3	SUMMARY OF QUANTITIES
4	EXISTING TYPICAL SECTIONS
5	PROPOSED TYPICAL SECTIONS
6-7	SCHEDULE OF QUANTITIES
8-15	PLAN AND PROFILE
16-26	GEOMETRIC DETAILS
27-30	PAVEMENT MARKING PLAN
31-34	MISCELLANEOUS DETAILS

HIGHWAY STANDARDS

000001-08	STANDARD SYMBOLS, ABBREVIATIONS AND PATTERNS
001001-02	AREAS OF REINFORCEMENT BARS
280001-07	TEMPORARY EROSION CONTROL SYSTEMS
424001-12	PERPENDICULAR CURB RAMPS FOR SIDEWALKS
424021-07	DEPRESSED CORNER FOR SIDEWALKS
442101-09	CLASS B PATCHES
442201-03	CLASS C&D PATCHES
604001-05	FRAME AND LIDS TYPE 1
604066-02	FRAME AND LID TYPE 15
606001-08	CONCRETE CURB TYPE B AND COMBINATION CONCRETE CURB AND GUTTER
701006-05	OFF-ROAD OPERATIONS, 2L 2W, 15' TO 24' FROM PAVEMENT EDGE
701301-04	LANE CLOSURE, 2L 2W, SHORT TIME OPERATIONS
701311-03	LANE CLOSURE, 2L 2W, MOVING OPERATIONS DAY ONLY
701501-06	URBAN LANE CLOSURE, 2L 2W, UNDIVIDED
701801-06	SIDEWALK, CORNER OR CROSSWALK CLOSURE
701901-10	TRAFFIC CONTROL DEVICES
728001-01	TELESCOPING STEEL SIGN SUPPORT
731001-01	BASE FOR TELESCOPING STEEL SIGN SUPPORT
780001-05	TYPICAL PAVEMENT MARKINGS

COMMITMENTS

NONE

GENERAL NOTES

1 THE NOMINAL THICKNESS FOR BASE AND SURFACE ARE SHOWN ON THE TYPICAL SECTIONS, STANDARDS, SCHEDULES, OR SPECIAL DETAILS. THE CONSTRUCTED THICKNESS OF THE ABOVE ITEMS SHALL NOT BE LESS THAN 90 PERCENT OF THE NOMINAL THICKNESS AT ANY LOCATION.

2. THE CONTRACTOR SHALL PROTECT AND CAREFULLY PRESERVE ALL PROPERTY MARKERS AND MONUMENTS UNTIL THE OWNER, AUTHORIZED AGENT, OR LAND SURVEYOR HAS WITNESSED OR OTHERWISE REFERENCED THEIR LOCATION. WHERE SECTION OR SUB-SECTION MONUMENTS ARE ENCOUNTERED, THE ENGINEER SHALL BE NOTIFIED BEFORE SUCH MONUMENTS ARE REMOVED. THE CONTRACTOR SHALL BE RESPONSIBLE FOR HAVING AN AUTHORIZED SURVEYOR RE-ESTABLISH ANY SECTION OR SUB-SECTION MONUMENTS DESTROYED BY HIS OPERATIONS.

3. ALL DISTURBED AREAS CAUSED BY THIS PROJECT SHALL BE SODDED AS SHOWN IN THE PLANS AND AS DIRECTED BY THE ENGINEER.

4. THE CONTRACTOR SHALL BE RESPONSIBLE FOR PROTECTING UTILITY PROPERTY FROM CONSTRUCTION OPERATIONS AS OUTLINED IN ARTICLE 107.39 OF THE STANDARD SPECIFICATIONS. THE J.U.L.I.E. NUMBER IS 1-800-892-0123. A MINIMUM OF 48 HOURS ADVANCE NOTICE IS REQUIRED.

5. THE LOCATION OF BURIED AND ABOVE GROUND UTILITIES SHOWN ARE APPROXIMATE AND ARE SHOWN FOR THE CONTRACTOR INFORMATIONAL USE ONLY. LOCATIONS ARE NOT TO BE REFERENCED FOR CONSTRUCTION PURPOSES. THE IMPLIED PRESENCE OR ABSENCE OF UTILITIES IS NOT TO BE CONSTRUED BY THE THE OWNER, ENGINEER, CONTRACTOR, OR SUBCONTRACTORS TO BE AN ACCURATE AND COMPLETE REPRESENTATION OF UTILITIES THAT MAY OR MAY NOT EXIST ON THE CONSTRUCTION SITE. BURIED AND ABOVE GROUND UTILITY LOCATIONS, IDENTIFICATION, AND MARKING ARE THE SOLE RESPONSIBILITY OF THE CONTRACTOR. REROUTING, DISCONNECTION, PROTECTION, ETC. OF ANY UTILITIES MUST BE COORDINATED BETWEEN THE CONTRACTOR, UTILITY COMPANY, AND OWNER. SITE SAFETY, INCLUDING THE AVOIDANCE OF HAZARDS ASSOCIATED WITH BURIED AND ABOVE GROUND UTILITIES, REMAINS THE SOLE RESPONSIBILITY OF THE CONTRACTOR.

6. IN ADDITION TO FIELD SURVEYS, PLAN DIMENSIONS AND DETAILS RELATIVE TO THE EXISTING FACILITES HAVE BEEN TAKEN FROM EXISTING PLANS AND ARE SUBJECT TO CONSTRUCTION VARIATIONS. IT SHALL BE THE CONTRACTORS RESPONSIBILITY TO VERIFY SUCH DIMENSIONS AND DETAILS IN THE FIELD. SUCH VARIATIONS SHALL NOT BE A CAUSE FOR ADDITIONAL COMPENSATION DUE TO A CHANGE IN THE SCOPE OF WORK: HOWEVER, THE CONTRACTOR WILL BE PAID FOR THE QUANTITY ACTUALLY FURNISHED AT THE UNIT PRICE BID FOR THE WORK. THE THICKNESS OF BITUMINOUS MIXTURES SHOWN ON THE PLANS IS THE NOMINAL.

7. ANY REFERENCE TO A STANDARD IN THESE PLANS SHALL BE INTERPRETED TO MEAN THE EDITION AS INDICATED BY THE SUB-NUMBER IN THE INDEX OF SHEETS OR THE COPY OF THE STANDARD INCLUDED IN THESE PLANS.

8. ANY EXISTING ROAD SIGNS THAT INTERFERE WITH CONSTRUCTION WILL BE REMOVED OR RELOCATED AS DIRECTED BY THE ENGINEER. AFTER THE CONSTRUCTION IS COMPLETED, THE CONTRACTOR WILL REPLACE THE EXISTING SIGNS AS DIRECTED BY THE ENGINEER. THIS WORK WILL BE DONE AT NO ADDITIONAL COST TO THE CITY UNLESS THE CONTRACTOR IS REQUIRED TO FURNISH AND INSTALL NEW SIGNS.

9. ALL SAW CUTS, NECESSARY TO COMPLETE THE WORK DETAILED IN THESE PLANS, SHALL BE INCLUDED IN THE COST FOR THE VARIOUS PAY ITEMS INVOLVED.

RATES OF APPLICATION TABLE

AGGREGATE (SURFACE, BASE, SUBBASE, OR BACKFILL)	2.05 TON / CU YD
STONE DUMPED RIPRAP	1.50 TON / CU YD
HOT-MIX ASPHALT:	
BITUMINOUS MATERIALS (TACK COAT)	0.05 LB / SQ FT (on milled HMA)
	0.025 LB / SQ FT (on HMA lifts & brick)
BITUMINOUS MATERIALS (PRIME COAT)	0.25 LB / SQ FT (on aggregate)
SURFACE / BINDER / LEVELING BINDER (112 lbs)	0.056 TON / SQ YD IN

MIXTURE REQUIREMENTS

LOCATION(S):	S 18th STREET	
MIXTURE USE(S)	SURFACE	HMA BINDER COURSE
AC / PG	SBS-PG64-28	PG 64-22
DESIGN AIR VOIDS	4%@N50 DESIGN	4%@N50 DESIGN
MIXTURE COMPOSITION (GRADATION MIXTURE)	IL 9.5	IL 9.5
FRICTION AGGREGATE	MIX "D"	-
MIXTURE WEIGHT	112 (LB*IN)/SQ YD	112 (LB*IN)/SQ YD
QUALITY MANAGEMENT	QC/QA	QC/QA

SUMMARY OF QUANTITIES

	PAY ITEM	ITEM	UNIT	TOTAL QUANTITY	PARTICIPATING ROADWAY 0005		NON-PARTICIPATING	
	25200100	SODDING	SQ YD	1126	1126			
	28000250	TEMPORARY EROSION CONTROL SEEDING	POUND	100	100			
	28000500	INLET AND PIPE PROTECTION	EACH	9	9			
	35100700	AGGREGATE BASE COURSE, TYPE A 8"	SQ YD	717	717			
	35101600	AGGREGATE BASE COURSE, TYPE B 4"	SQ YD	333	333			
	40600290	BITUMINOUS MATERIALS (TACK COAT)	POUND	7570	7570			
	40600370	LONGITUDINAL JOINT SEALANT	FOOT	4004	4004			
	40600982	HOT-MIX ASPHALT SURFACE REMOVAL - BUTT JOINT	SQ YD	356	356			
	40602978	HOT-MIX ASPHALT BINDER COURSE, IL- 9.5, N50	TON	1515	1515			
	40604160	POLYMERIZED HOT-MIX ASPHALT SURFACE COURSE, IL-9.5, MIX "D", N50	TON	1415	1415			
	42300200	PORTLAND CEMENT CONCRETE DRIVEWAY PAVEMENT, 6 INCH	SQ YD	271	271			
	42300400	PORTLAND CEMENT CONCRETE DRIVEWAY PAVEMENT, 8 INCH	SQ YD	62	62			
	42400100	PORTLAND CEMENT CONCRETE SIDEWALK 4 INCH	SQ FT	8976	8976			
	44000100	PAVEMENT REMOVAL	SQ YD	717	717			
	44000161	HOT-MIX ASPHALT SURFACE REMOVAL, 3"	SQ YD	15772	15772			
	44000200	DRIVEWAY PAVEMENT REMOVAL	SQ YD	312	312			
	44000500	COMBINATION CURB AND GUTTER REMOVAL	FOOT	1532	1532			
	44000600	SIDEWALK REMOVAL	SQ FT	8190	8190			
	44200099	PAVEMENT PATCHING, TYPE III, 8 INCH	SQ YD	200	200			
	44200101	PAVEMENT PATCHING, TYPE IV, 8 INCH	SQ YD	200	200			
	44200974	CLASS B PATCHES, TYPE III, 10 INCH	SQ YD	21	21			
	60255500	MANHOLES TO BE ADJUSTED	EACH	1	1			
	60255800	MANHOLES TO BE ADJUSTED WITH NEW TYPE 1 FRAME, CLOSED LID	EACH	20	20			
	60261500	INLETS TO BE ADJUSTED WITH NEW TYPE 15 FRAME AND LID	EACH	4	4			
	60266600	VALVE BOXES TO BE ADJUSTED	EACH	7	7			
	60603800	COMBINATION CONCRETE CURB AND GUTTER, TYPE B-6.12	FOOT	1532	1532			
	67100100	MOBILIZATION	L SUM	1	1			
*	72000100	SIGN PANEL - TYPE 1	SQ FT	4	4			
*	72800100	TELESCOPING STEEL SIGN SUPPORT	FOOT	12	12			
*	73100100	BASE FOR TELESCOPING STEEL SIGN SUPPORT	EACH	2	2			
*	78000100	THERMOPLASTIC PAVEMENT MARKING - LETTERS AND SYMBOLS	SQ FT	6.2	6.2			
*	78000300	THERMOPLASTIC PAVEMENT MARKING - LINE 5"	FOOT	1108	1108			
*	78000400	THERMOPLASTIC PAVEMENT MARKING - LINE 6"	FOOT	144	144			
*	78000650	THERMOPLASTIC PAVEMENT MARKING - LINE 24"	FOOT	193	193			

* - SPECIALTY ITEM

SUMMARY OF QUANTITIES

	PAY ITEM	ITEM	UNIT	TOTAL QUANTITY	PARTICIPATING ROADWAY 0005		NON-PARTICIPATING	
*	78001120	PAINT PAVEMENT MARKING - LINE 5"	FOOT	156	156			
*	78001130	PAINT PAVEMENT MARKING - LINE 6"	FOOT	316	316			
*	78001180	PAINT PAVEMENT MARKING - LINE 24"	FOOT	48	48			
	78300201	PAVEMENT MARKING REMOVAL - GRINDING	SQ FT	281	281			
	X2010404	STUMP REMOVAL	EACH	1	1			
	X4240800	DETECTABLE WARNINGS (SPECIAL)	SQ FT	424	424			
	X6010302	TRENCH DRAIN	FOOT	24	24			
	X6011605	PIPE DRAINS 4" (SPECIAL)	FOOT	30	30			
	X6026200	INLETS TO BE ADJUSTED (SPECIAL)	EACH	3	3			
	X7010216	TRAFFIC CONTROL AND PROTECTION, (SPECIAL)	L SUM	1	1			
	Z0012500	CONCRETE CURB REPAIR	FOOT	800	800			
	Z0013798	CONSTRUCTION LAYOUT	L SUM	1	1			
#	Z0076600	TRAINEES	HOUR	1,000				
#	Z0076604	TRAINEES TRAINING PROGRAM GRADUATE	HOUR	1,000				

0042

MODEL: Default
FILE NAME: F:\PROJECT FILES\MFT340 South 18th\CADD DRAWINGS\003 Summary MFT340.dgn

CITY OF QUINCY UTILITIES & ENGINEERING

USER NAME = mtunis	DESIGNED -	REVISED -
	DRAWN -	REVISED -
PLOT SCALE = 40.0000 ' / in.	CHECKED -	REVISED -
PLOT DATE = 1/3/2025	DATE -	REVISED -

CITY OF QUINCY, ILLINOIS

SUMMARY OF QUANTITIES

SCALE: | SHEET 1 OF 1 SHEETS | STA. | TO STA.

F.A.U. RTE.	SECTION	COUNTY	TOTAL SHEETS	SHEET NO.
7824	21-00340-00-RS	ADAMS	34	3

CONTRACT NO. 93830

ILLINOIS | FED. AID PROJECT

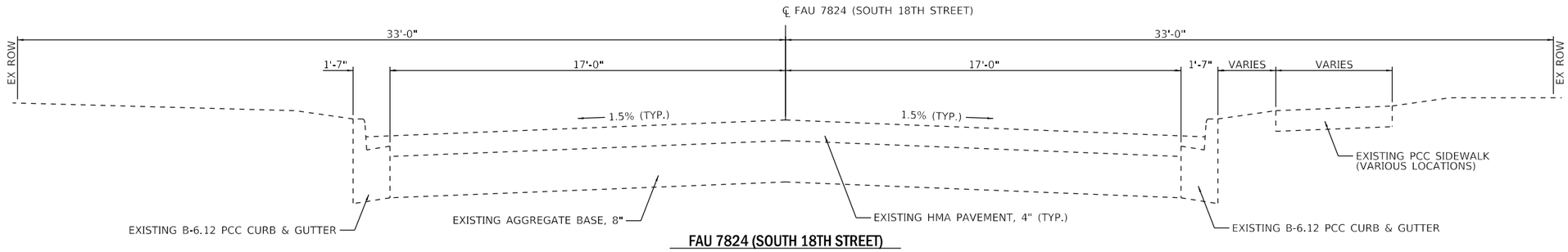

FAU 7824 (SOUTH 18TH STREET)

STA 13+50.0 TO STA 39+09.0

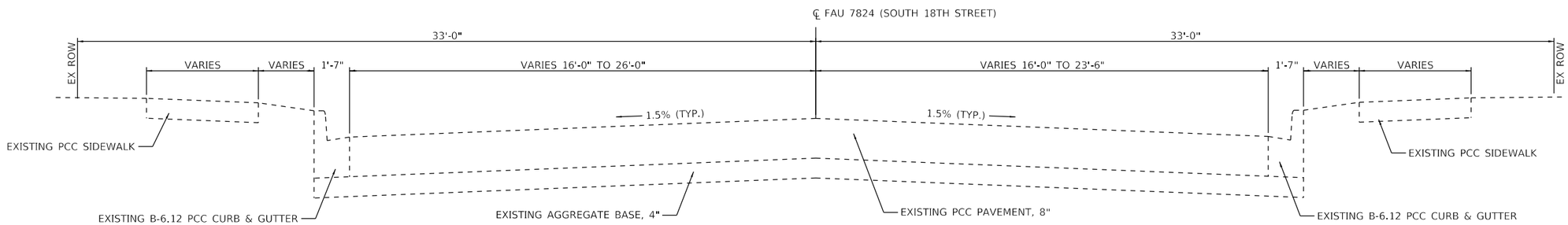

FAU 7824 (SOUTH 18TH STREET)

STA 39+09.0 TO STA 40+33.4
STA 54+90.2 TO STA 59+85.0

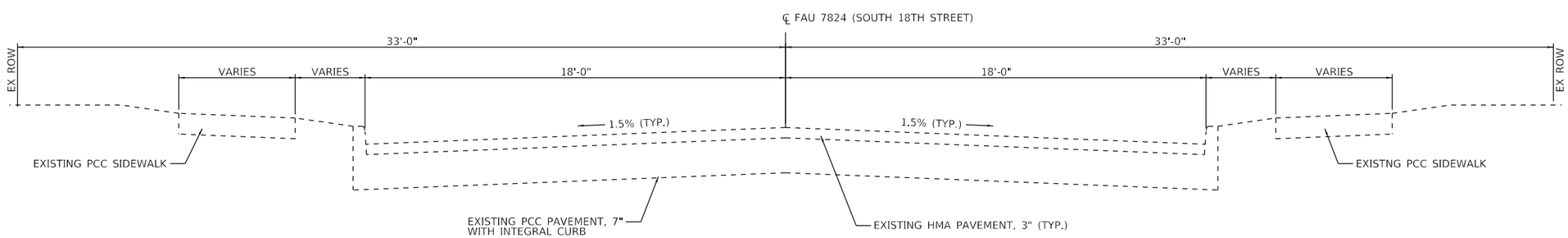

FAU 7824 (SOUTH 18TH STREET)

STA 40+33.4 TO STA 54+90.2

MODEL: Default
FILE NAME: F:\PROJECT FILES\MFT340 South 18th\CADD DRAWINGS\1004 TypSections MFT340.dgn

CITY OF QUINCY UTILITIES & ENGINEERING	USER NAME = mtunis	DESIGNED -	REVISED -	CITY OF QUINCY, ILLINOIS	EXISTING TYPICAL SECTIONS	F.A.U. RTE.	SECTION	COUNTY	TOTAL SHEETS / SHEET NO.
		DRAWN -	REVISED -			7824	21-00340-00-RS	ADAMS	34 / 4
	PLOT SCALE = 40.0000 ' / in.	CHECKED -	REVISED -					CONTRACT NO. 93830	
	PLOT DATE = 12/30/2024	DATE -	REVISED -		SCALE: NONE / SHEET 1 OF 1 SHEETS / STA. / TO STA.		ILLINOIS	FED. AID PROJECT	

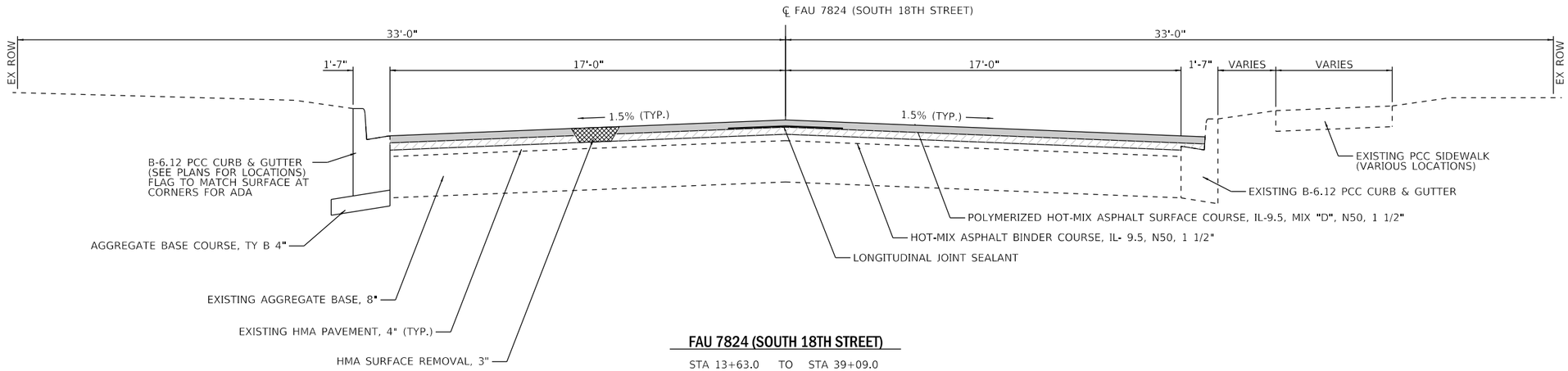

FAU 7824 (SOUTH 18TH STREET)

STA 13+63.0 TO STA 39+09.0

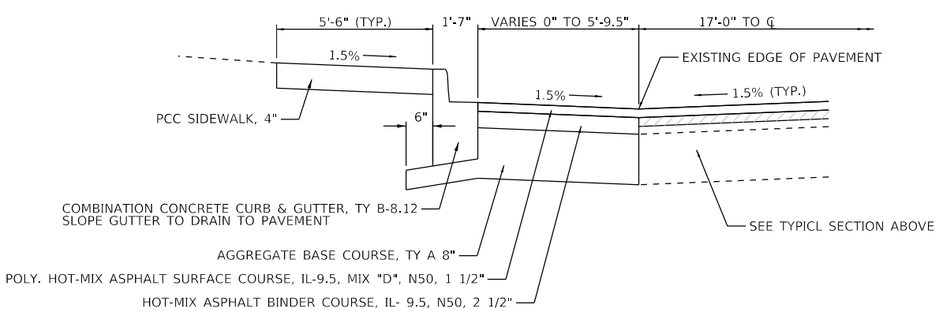

ACCESSIBLE PARKING SPACES

STA 13+98.1 TO STA 14+59.9 LT

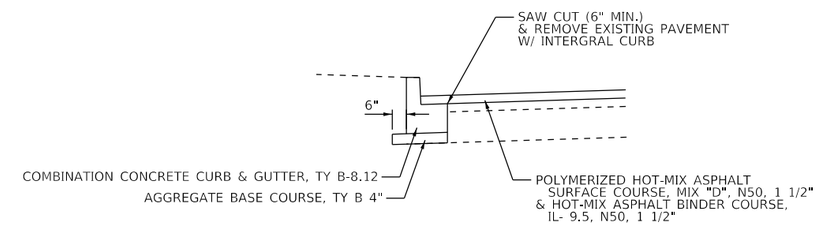

ALTERNATIVE CONCRETE CURB REPAIR

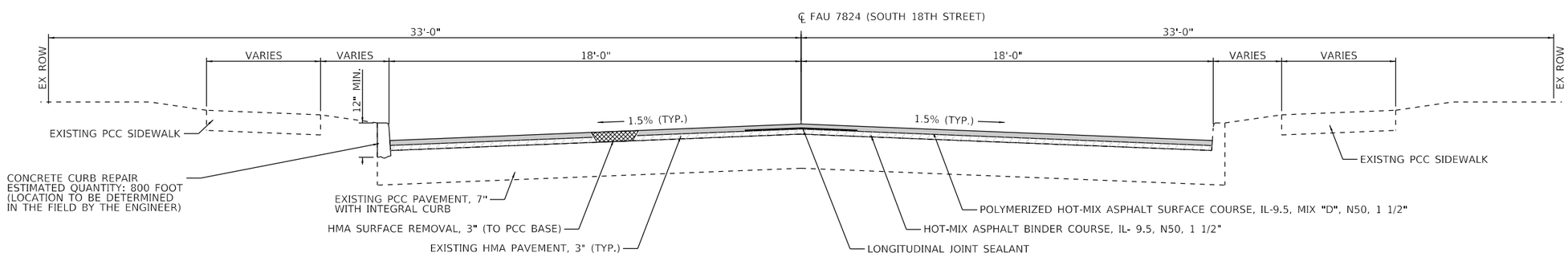

FAU 7824 (SOUTH 18TH STREET)

STA 40+33.4 TO STA 48+74.8
STA 51+34.4 TO STA 54+90.2

MODEL: Default
FILE NAME: F:\PROJECT FILES\MFT340 South 18th\CADD_DRAWINGS\I004 TypSections MFT340.dgn

CITY OF QUINCY UTILITIES & ENGINEERING	USER NAME = mtunis	DESIGNED -	REVISED -	CITY OF QUINCY, ILLINOIS	PROPOSED TYPICAL SECTIONS			F.A.U. RTE.	SECTION	COUNTY	TOTAL SHEETS	SHEET NO.
		DRAWN -	REVISED -					7824	21-00340-00-RS	ADAMS	34	5
	PLOT SCALE = 40.0000 ' / in.	CHECKED -	REVISED -							CONTRACT NO. 93830		
	PLOT DATE = 12/30/2024	DATE -	REVISED -		SCALE: NONE	SHEET 1 OF 1 SHEETS	STA. TO STA.		ILLINOIS	FED. AID PROJECT		

PAVEMENT SCHEDULE

LOCATION		HOT-MIX ASPHALT SURFACE REMOVAL - BUTT JOINT	HOT-MIX ASPHALT SURFACE REMOVAL, 3"	PAVEMENT REMOVAL	AGGREGATE BASE COURSE, TYPE A 8"	HMA BINDER COURSE, IL-9.5, N50	POLY HMA SURFACE COURSE, IL-9.5, MIX "D", N50	BITUMINOUS MATERIALS (TACK COAT)	LONG JOINT SEALANT
		(SQ YD)	(SQ YD)	(SQ YD)	(SQ YD)	(TON)	(TON)	(POUND)	(FT)
13+63.0 to 18+00.0	LT	22.1	793.3	112.0	112.0	94	78	415	437
	RT	22.3	872.1	169.6	169.6	113	89	480	
18+00.0 to 24+00.0	LT	34.6	1207.1	18.7	18.7	108	106	565	600
	RT	37.6	1199.6	122.6	122.6	131	114	610	
24+00.0 to 30+00.0	LT	-	1138.6	-	-	96	96	510	600
	RT	39.7	1282.4	-	-	111	111	595	
30+00.0 to 36+00.0	LT	-	1113.0	131.9	131.9	123	105	560	600
	RT	-	1163.9	161.5	161.5	134	111	595	
36+00.0 to 39+09.0	LT	20.7	619.3	-	-	54	54	290	309
	RT	19.4	599.9	-	-	52	52	280	
40+33.4 to 42+00.0	LT	19.4	312.0	-	-	28	28	150	167
	RT	19.7	311.5	-	-	28	28	150	
42+00.0 to 48+00.0	LT	39.3	1223.5	-	-	106	106	570	600
	RT	41.0	1204.9	-	-	105	105	560	
48+00.0 to 54+00.0	LT	-	1204.9	-	-	101	101	540	600
	RT	-	1204.9	-	-	101	101	540	
54+00.0 to 54+90.2	LT	19.7	159.4	-	-	15	15	80	91
	RT	20.4	161.4	-	-	15	15	80	
TOTALS		**356**	**15772**	**717**	**717**	**1515**	**1415**	**7570**	**4004**

CURB & GUTTER SCHEDULE

LOCATION	COMB CONC CURB & GUTTER, TY B-6.12	CURB & GUTTER REMOVAL
	(FOOT)	(FOOT)
13+63.7 TO 13+98.5 RT	48.1	48.1
13+66.5 TO 16+72.2 LT	321.7	321.7
16+52.9 TO 16+71.9 RT	54.6	54.6
17+07.6 TO 17+25.3 RT	53.2	53.2
17+08.2 TO 17+24.4 LT	25.2	25.2
20+02.7 TO 20+27.4 LT	24.7	24.7
21+19.3 TO 21+33.4 RT	22.3	22.3
21+20.5 TO 21+35.0 LT	31.9	31.9
21+69.5 TO 21+93.2 RT	27.9	27.9
21+70.9 TO 21+84.7 LT	31.0	31.0
25+78.9 TO 25+95.6 RT	31.1	31.1
26+99.9 TO 27+31.6 LT	31.7	31.7
28+59.6 TO 28+98.6 LT	39.0	39.0
29+34.2 TO 29+65.9 LT	31.7	31.7
32+69.2 TO 33+44.3 LT	75.1	75.1
32+86.5 TO 33+25.5 RT	39.0	39.0
34+99.7 TO 35+20.7 LT	35.7	35.7
35+00.7 TO 35+20.0 RT	41.4	41.4
35+55.9 TO 35+88.5 RT	54.7	54.7
35+56.6 TO 35+85.2 LT	42.9	42.9
37+50.1 TO 37+85.1 RT	35.0	35.0
38+10.9 TO 38+42.9 LT	32.0	32.0
39+01.2 TO 39+33.2 LT	32.0	32.0
39+59.6 TO 39+81.8 RT	34.7	34.7
39+64.0 TO 39+82.6 LT	29.9	29.9
40+16.9 TO 40+36.8 RT	30.8	30.8
40+20.0 TO 40+38.7 LT	24.1	24.1
42+85.5 TO 43+12.8 LT	27.3	27.3
43+17.5 TO 43+70.1 RT	52.6	52.6
45+48.6 TO 45+61.2 RT	22.1	22.1
45+50.2 TO 45+62.8 LT	23.5	23.5
47+72.6 TO 48+97.1 RT	124.5	124.5
TOTALS	**1532**	**1532**

SIDEWALK SCHEDULE

LOCATION	PCC SIDEWALK 4 INCH	DETECTABLE WARNINGS (SPECIAL)	SIDEWALK REMOVAL
	(SQ FT)	(SQ FT)	(SQ FT)
13+68.24 TO 13+83.94 RT	129.1	10.0	170.0
13+70.29 TO 16+71.36 LT	2076.8	46.0	2182.0
16+54.96 TO 16+71.30 RT	166.4	20.0	100.0
17+08.44 TO 17+21.06 RT	131.2	20.0	-
17+09.13 TO 17+21.05 LT	99.1	20.0	-
21+20.16 TO 21+32.70 RT	165.3	20.0	165.0
21+21.06 TO 21+34.02 LT	171.5	20.0	157.0
21+70.12 TO 21+84.19 RT	200.5	20.0	181.0
21+71.65 TO 21+83.47 LT	199.2	20.0	170.0
25+81.73 TO 25+95.00 RT	139.7	20.0	167.0
27+00.96 TO 27+11.04 LT	43.8	-	49.0
27+21.53 TO 27+28.30 LT	27.3	-	31.0
28+65.56 TO 28+72.39 LT	24.8	-	31.0
28+88.52 TO 28+95.75 LT	24.5	-	48.0
29+37.39 TO 29+44.22 LT	24.8	-	26.0
29+55.30 TO 30+14.51 LT	264.0	-	265.0
34+97.59 TO 35+19.90 LT	383.3	20.0	403.0
35+05.66 TO 35+19.46 RT	215.9	20.0	236.0
35+56.63 TO 35+88.52 RT	247.4	20.0	230.0
35+57.31 TO 35+87.68 LT	291.9	20.0	322.0
37+48.80 TO 37+60.07 RT	55.0	-	43.0
37+75.07 TO 38+96.55 RT	606.4	-	-
37+99.41 TO 38+20.94 LT	124.2	-	130.0
38+32.94 TO 39+11.25 LT	455.9	-	935.0
39+23.25 TO 39+79.91 LT	416.6	27.0	-
39+49.85 TO 39+81.17 RT	303.9	20.0	302.0
40+17.53 TO 40+42.24 RT	343.1	20.0	320.0
40+22.62 TO 40+50.39 LT	372.7	27.0	373.0
42+72.69 TO 43+27.29 RT	276.0	-	223.0
42+94.00 TO 42+99.00 LT	25.0	-	25.0
43+08.62 TO 43+13.62 LT	24.7	-	25.0
43+36.13 TO 43+50.41 RT	67.2	-	51.0
43+60.59 TO 43+66.19 RT	25.9	-	24.0
45+49.50 TO 45+58.70 RT	92.3	17.0	132.0
45+51.01 TO 45+85.97 LT	194.5	17.0	261.0
47+72.58 TO 47+89.16 RT	74.1	-	88.0
48+02.02 TO 48+49.89 RT	234.9	-	19.0
48+60.96 TO 48+76.02 RT	73.7	-	91.0
48+87.09 TO 49+22.75 RT	182.5	-	215.0
TOTALS	**8976**	**424**	**8190**

ENTRANCE SCHEDULE

LOCATION	PCC DRIVEWAY PAVEMENT, 6 INCH	PCC DRIVEWAY PAVEMENT, 8 INCH	AGGREGATE BASE COURSE, TYPE B 4"	DRIVEWAY PAVEMENT REMOVAL
	(SQ YD)	(SQ YD)	(SQ YD)	(SQ YD)
STA 20+15.0 LT	21.5		21.5	21.5
STA 27+16.3 LT	19.0		19.0	16.6
STA 28+80.4 LT	28.5		28.5	22.3
STA 29+49.7 LT	21.8		21.8	19.4
STA 33+07.6 LT		27.4	27.4	33.1
STA 33+06.0 RT		34.3	34.3	33.3
STA 37+67.6 RT	29.4		29.4	34.7
STA 38+26.9 LT	18.6		18.6	16.2
STA 39+17.2 LT	18.6		18.6	8.0
STA 43+04.7 LT	12.5		12.5	12.5
STA 43+31.7 RT	16.7		16.7	14.7
STA 43+55.5 RT	18.6		18.6	19.8
STA 47+96.5 RT	21.8		21.8	19.0
STA 48+55.4 RT	21.8		21.8	20.4
STA 48+81.6 RT	21.8		21.8	19.6
TOTALS	**271**	**62**	**333**	**312**

PIPE DRAINS AND TRENCH DRAINS SCHEDULE

LOCATION	PIE DRAINS 4" (SPECIAL)	TRENCH DRAINS
	(FOOT)	(FOOT)
STA 14+23.9 to STA 14+30.4 LT	20	6
STA 14+77.6 LT	5	12
STA 15+30.5 LT	5	6
TOTALS	**30**	**24**

MODEL: Default
FILE NAME: F:\PROJECT FILES\MFT340 South 18th\CADD_DRAWINGS\1006 Schedules MFT340.dgn

CITY OF QUINCY UTILITIES & ENGINEERING

USER NAME = mtunis	DESIGNED -	REVISED -	
	DRAWN -	REVISED -	
PLOT SCALE = 40.0000 ' / in.	CHECKED -	REVISED -	
PLOT DATE = 12/30/2024	DATE -	REVISED -	

CITY OF QUINCY, ILLINOIS

SCHEDULE OF QUANTITIES

SCALE: NONE | SHEET 1 OF 2 SHEETS | STA. TO STA.

F.A.U. RTE.	SECTION	COUNTY	TOTAL SHEETS	SHEET NO.
7824	21-00340-00-RS	ADAMS	34	6
		CONTRACT NO. 93830		
		ILLINOIS FED. AID PROJECT		

ADJUSTMENT SCHEDULE

LOCATION	MANHOLES TO BE ADJUSTED	MANHOLES TO BE ADJUSTED WITH NEW TY 1 FR, CL LID	VALVE BOXES TO BE ADJUSTED	INLETS TO BE ADJUSTED (SPECIAL)	INLETS TO BE ADJUSTED WITH NEW TY 15 FR & LID
	(EACH)	(EACH)	(EACH)	(EACH)	(EACH)
STA 13+84.1 15.0' LT	1				
STA 16+66.1 25.7' RT				1	
STA 16+95.8 8.2' RT		1			
STA 17+03.6 33.6' RT			1		
STA 19+57.8 0.2' LT		1			
STA 21+51.2 0.8' RT		1			
STA 21+69.7 14.3' RT		1			
STA 23+81.8 14.1' RT		1			
STA 25+77.0 13.5' RT		1			
STA 25+79.2 7.9' LT			1		
STA 26+13.7 1.7' RT		1			
STA 28+67.7 2.1' RT		1			
STA 30+42.8 9.1' LT			1		
STA 30+66.7 3.3' RT		1			
STA 33+04.0 0.5' RT		1			
STA 33+18.6 14.5' RT		1			
STA 35+23.8 34.6' LT		1			
STA 35+27.7 29.2' RT			1		
STA 35+28.0 19.3' LT			1		
STA 35+29.8 33.3' LT			1		
STA 35+36.9 0.8' RT		1			
STA 35+57.5 35.4' RT					1
STA 35+57.5 35.1' LT					1
STA 35+58.6 15.0' RT		1			
STA 35+73.7 20.1' RT					1
STA 35+73.9 18.5' LT					1
STA 37+90.6 0.5' RT		1			
STA 39+74.6 25.1' RT				1	
STA 40+23.7 27.2' RT				1	
STA 40+35.4 9.1' LT			1		
STA 41+14.3 0.1' LT		1			
STA 45+33.9 0.7' RT		1			
STA 47+87.5 0.7' RT		1			
STA 52+90.1 0.2' RT		1			
STA 54+84.0 13.0' RT		1			
TOTALS	**1**	**20**	**7**	**3**	**4**

PAVEMENT PATCHING

LOCATION	CLASS B PATCHES, TYPE III, 10 INCH	PAVEMENT PATCHING	
		TYPE III	TYPE IV
		8 INCH	8 INCH
	(SQ YD)	(SQ FT)	(SQ FT)
STA 39+59.6 to STA 39+85.8 RT	21		
TBD DURING CONST. BY ENGR		200	200
TOTALS	**21**	**200**	**200**

SODDING SCHEDULE

LOCATION		SODING
		(SQ YD)
13+63.0 TO 18+00.0	LT	170
	RT	56
18+00.0 TO 24+00.0	LT	60
	RT	46
24+00.0 TO 30+00.0	LT	85
	RT	0
30+00.0 TO 36+00.0	LT	105
	RT	55
36+00.0 TO 42+00.0	LT	168
	RT	177
42+00.0 TO 48+00.0	LT	38
	RT	84
48+00.0 TO 54+00.0	LT	0
	RT	82
54+00.0 TO 54+90.2	LT	0
	RT	0
TOTALS		**1126**

INLET & PIPE PROTECTION SCHEDULE

LOCATION	INLET AND PIPE PROTECTION
	(EACH)
STA 16+66.2 24.9' RT	1
STA 21+72.2 31.2' RT	1
STA 21+86.8 19.4' RT	1
STA 35+57.5 35.0' RT	1
STA 35+57.6 35.5' LT	1
STA 35+73.7 19.7' RT	1
STA 35+73.9 18.9' LT	1
STA 39+74.6 25.1' RT	1
STA 40+23.7 27.2' RT	1
TOTALS	**9**

PAVEMENT MARKING SCHEDULE

LOCATION	THERMOPLASTIC PAVEMENT MARKING					PAINT PAVEMENT MARKING - LINE			SIGN PANEL - TYPE 1	TELESCOPING STEEL SIGN SUPPORT	BASE FOR TELESCOPING STEEL SIGN SUPPORT	PAVEMENT MARKING REMOVAL - GRINDING
	LINE				LETTERS & SYMBOLS							
	5"	6"		24"		5"	6"	24"				
	YELLOW	WHITE	YELLOW	WHITE		YELLOW	WHITE	WHITE				
	(FT)	(FT)	(FT)	(FT)	(SQ FT)	(FT)	(FT)	(FT)	(SQ FT)	(FT)	(EACH)	(SQ FT)
HARRISON INTERSECTION		71		17								
13+81.0 TO 38+65.0	620											
ACCESSIBLE PARKING AREA	98		73		6.2				4	12	2	
VAN BUREN INTERSECTION				32								
JACKSON INTERSECTION				32								
ADAMS INTERSECTION				32								
MADISON INTERSECTION				32								
38+65.0 TO 39+09.0	50											
39+09.0 TO 39+65.0						56						
JEFFERSON INTERSECTION				16			316	48				281
40+34.0 TO 41+34.0						100						
41+34.0 TO 54+90.2	340											
WASHINGTON INTERSECTION				32								
TOTALS	**1108**	**71**	**73**	**193**	**6.2**	**156**	**316**	**48**	**4**	**12**	**2**	**281**

STUMP REMOVAL

LOCATION	STUMP REMOVAL
	(EACH)
STA 16+68.3 45.9' RT	1
TOTALS	**1**

MODEL: Default
FILE NAME: F:\PROJECT FILES\MFT340 South 18th\CADD_DRAWINGS\006 Schedules MFT340.dgn

CITY OF QUINCY UTILITIES & ENGINEERING

USER NAME = mtunis	DESIGNED -	REVISED -
	DRAWN -	REVISED -
PLOT SCALE = 40.0000 ' / in.	CHECKED -	REVISED -
PLOT DATE = 1/3/2025	DATE -	REVISED -

CITY OF QUINCY, ILLINOIS

SCHEDULE OF QUANTITIES

SCALE: NONE | SHEET 2 OF 2 SHEETS | STA. TO STA.

F.A.U. RTE.	SECTION	COUNTY	TOTAL SHEETS	SHEET NO.
7824	21-00340-00-RS	ADAMS	34	7

CONTRACT NO. 93830

ILLINOIS | FED. AID PROJECT

ESTIMATED QUANTITIES TO BE DETERMINED DURING CONSTRUCTION BY THE ENGINEER:

PAVEMENT PATCHING, TYPE III, 8 INCH 200 SQ YD
PAVEMENT PATCHING, TYPE IV, 8 INCH 200 SQ YD

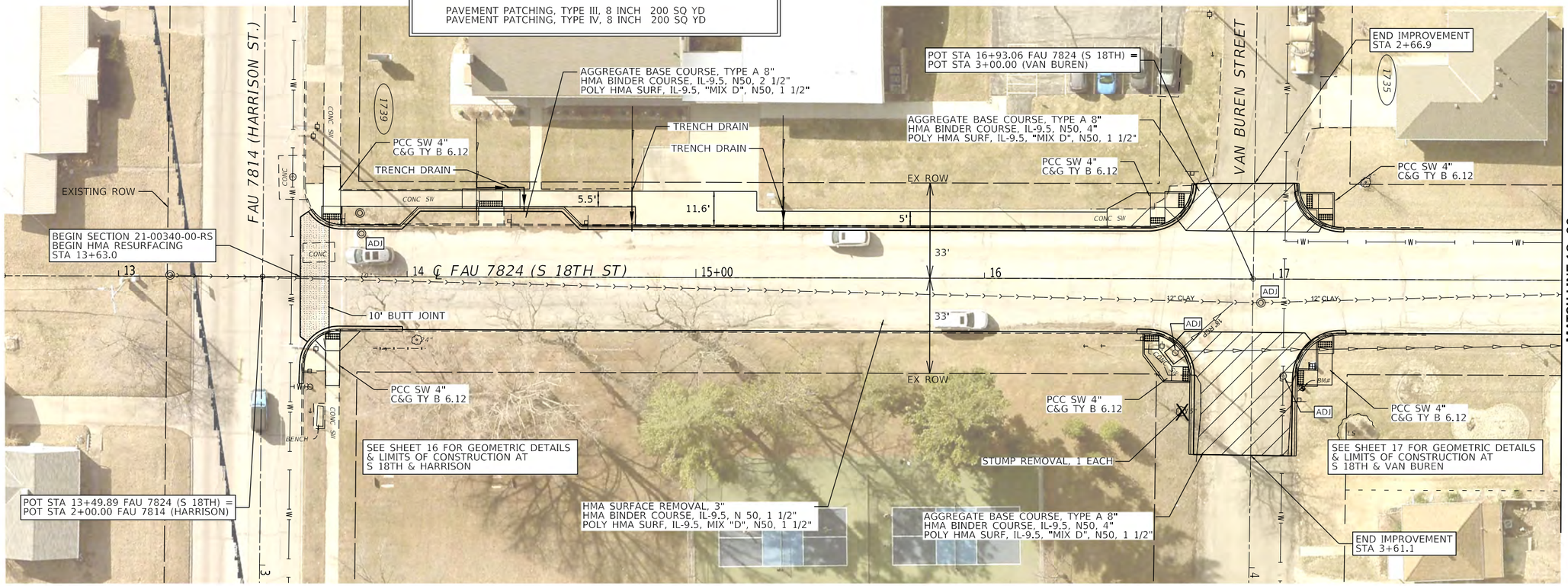

REMOVAL LEGEND

- HOT-MIX ASPALT SURFACE REMOVAL - BUTT JOINT
- PAVEMENT REMOVAL

0 20 40 60
SCALE IN FEET

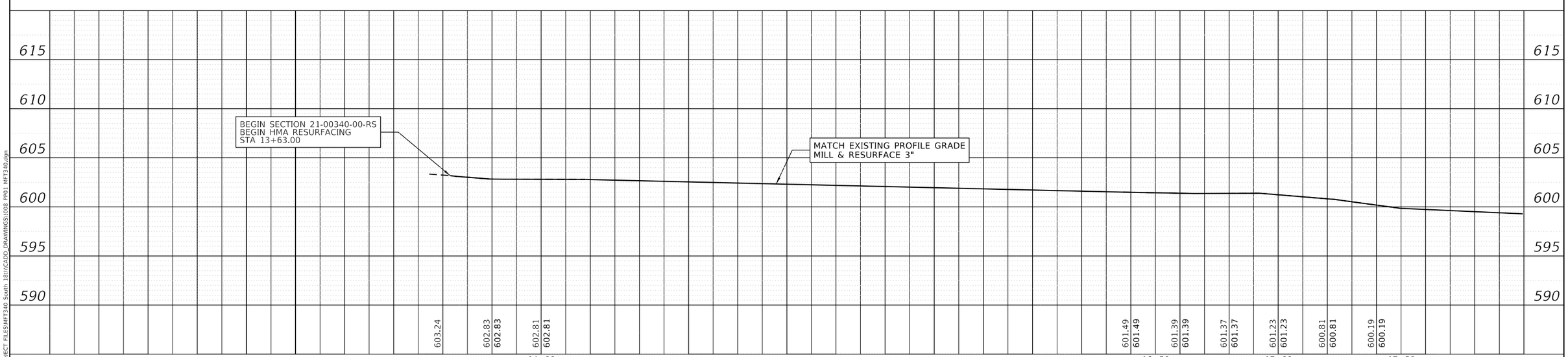

PLAN	BY	DATE
SURVEYED		
PLOTTED		
ALIGNMENT CHECKED		
RT. OF WAY CHECKED		
CADD FILE NAME		
NOTE BOOK NO.		

PROFILE	BY	DATE
SURVEYED		
PLOTTED		
GRADES CHECKED		
BM. NOTED		
STRUCTURE NOTAT'NS CH'KD		
NOTE BOOK NO.		

FILE NAME: E:\PROJECT FILES\MFT340 South 18th\CADD_DRAWINGS\U008 PP01 MFT340.dgn

CITY OF QUINCY UTILITIES & ENGINEERING

USER NAME = mtunis	DESIGNED -	REVISED -	
	DRAWN -	REVISED -	
PLOT SCALE = 40.0001 ' / in.	CHECKED -	REVISED -	
PLOT DATE = 12/30/2024	DATE -	REVISED -	

CITY OF QUINCY, ILLINOIS

SOUTH 18TH STREET
PLAN & PROFILE

SCALE: 1" = 40' | SHEET 1 OF 8 SHEETS | STA. TO STA.

F.A.U. RTE.	SECTION	COUNTY	TOTAL SHEETS	SHEET NO.
7824	21-00340-00-RS	ADAMS	34	8

CONTRACT NO. 93830

ILLINOIS | FED. AID PROJECT

REMOVAL LEGEND

- HOT-MIX ASPALT SURFACE REMOVAL - BUTT JOINT
- PAVEMENT REMOVAL

ESTIMATED QUANTITIES TO BE DETERMINED DURING CONSTRUCTION BY THE ENGINEER:

PAVEMENT PATCHING, TYPE III, 8 INCH 200 SQ YD
PAVEMENT PATCHING, TYPE IV, 8 INCH 200 SQ YD

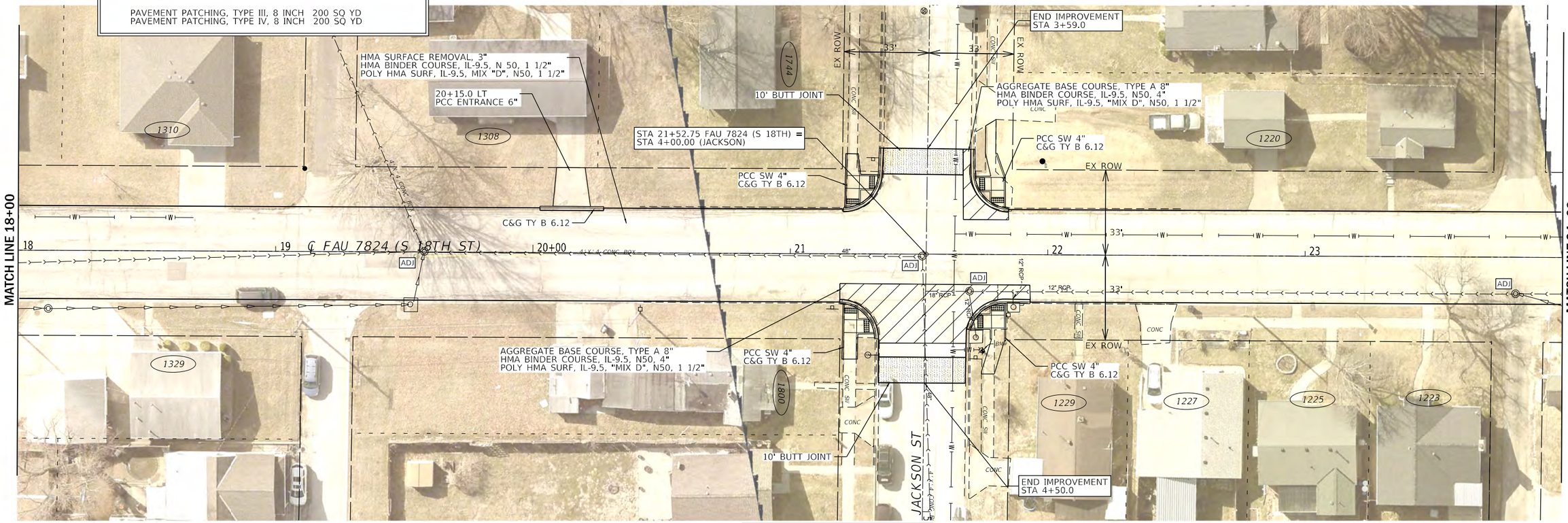

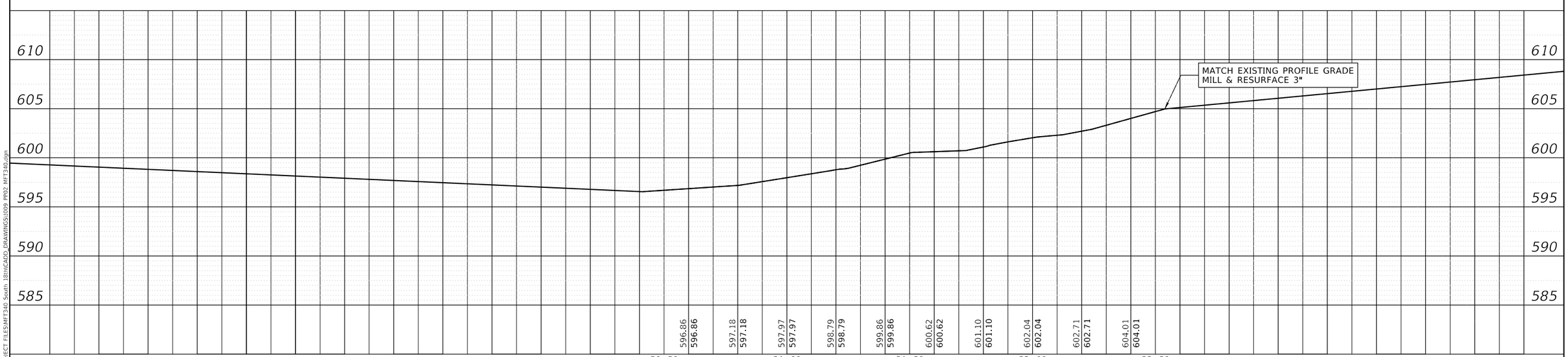

PLAN	BY	DATE
SURVEYED		
PLOTTED		
ALIGNMENT CHECKED		
RT. OF WAY CHECKED		
CADD FILE NAME		
NOTE BOOK NO.		

PROFILE	BY	DATE
SURVEYED		
PLOTTED		
GRADES CHECKED		
BM. NOTED		
STRUCTURE NOTAT'NS CH'KD		
NOTE BOOK NO.		

FILE NAME: E:\PROJECT FILES\MFT340 South 18th\CADD_DRAWINGS\U009 PR02 MFT340.dgn

CITY OF QUINCY UTILITIES & ENGINEERING

USER NAME = mtunis	DESIGNED -	REVISED -
	DRAWN -	REVISED -
PLOT SCALE = 40.0001 ' / in.	CHECKED -	REVISED -
PLOT DATE = 12/30/2024	DATE -	REVISED -

CITY OF QUINCY, ILLINOIS

SOUTH 18TH STREET
PLAN & PROFILE

SCALE: 1" = 40' | SHEET 2 OF 8 SHEETS | STA. TO STA.

F.A.U. RTE.	SECTION	COUNTY	TOTAL SHEETS	SHEET NO.
7824	21-00340-00-RS	ADAMS	34	9

CONTRACT NO. 93830

ILLINOIS | FED. AID PROJECT

REMOVAL LEGEND

- HOT-MIX ASPALT SURFACE REMOVAL - BUTT JOINT
- PAVEMENT REMOVAL

ESTIMATED QUANTITIES TO BE DETERMINED DURING CONSTRUCTION BY THE ENGINEER:

PAVEMENT PATCHING, TYPE III, 8 INCH 200 SQ YD
PAVEMENT PATCHING, TYPE IV, 8 INCH 200 SQ YD

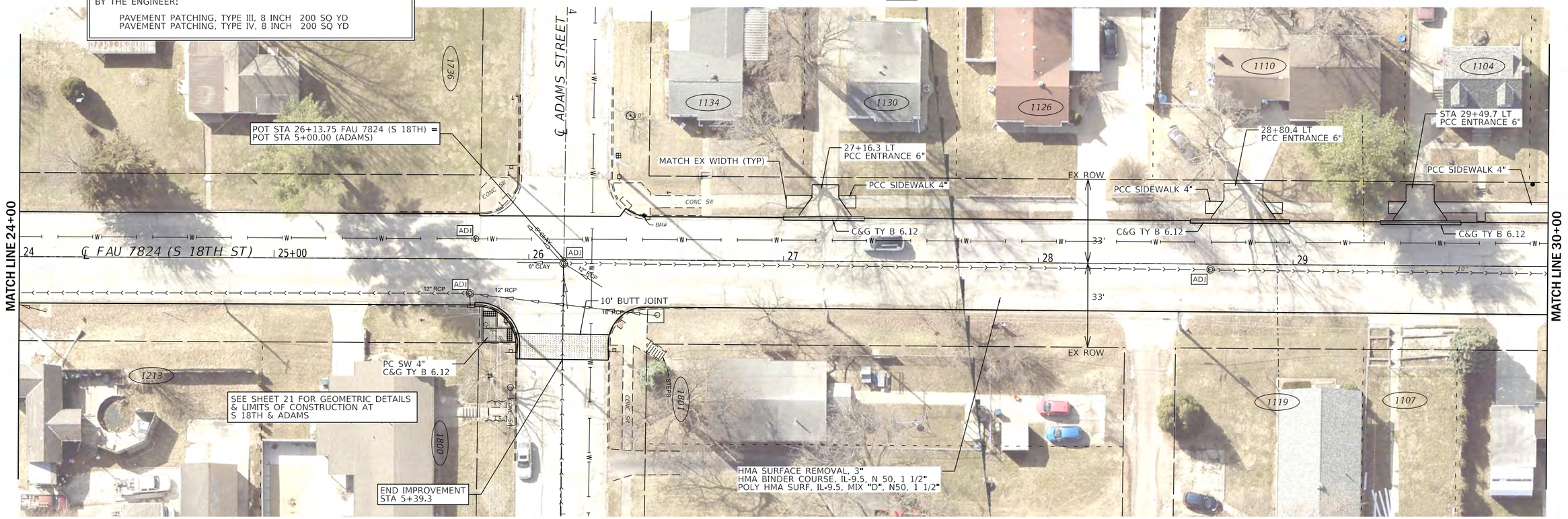

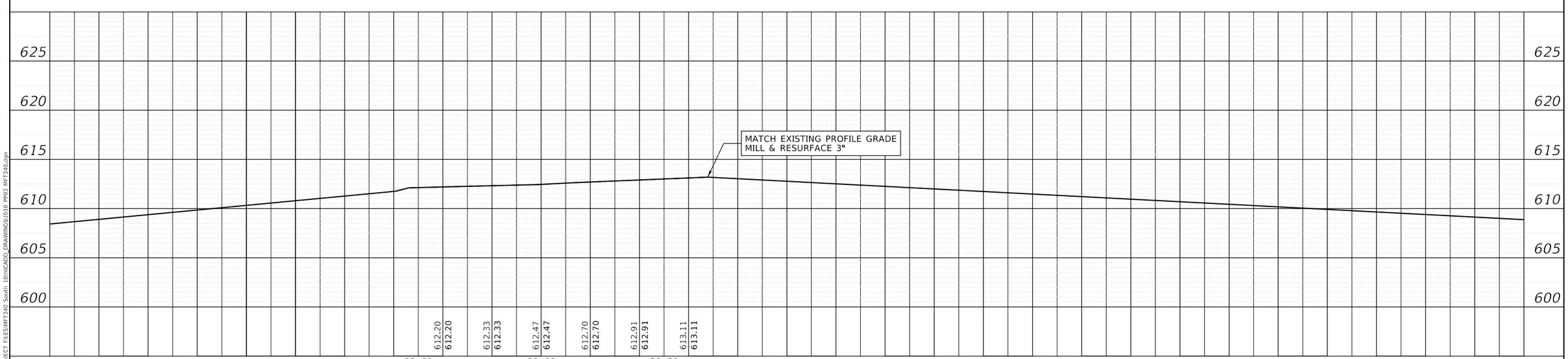

PLAN	BY	DATE
SURVEYED		
PLOTTED		
ALIGNMENT CHECKED		
RT. OF WAY CHECKED		
CADD FILE NAME		
NOTE BOOK NO.		

PROFILE	BY	DATE
SURVEYED		
PLOTTED		
GRADES CHECKED		
BM. NOTED		
STRUCTURE NOTAT'NS CH'KD		
NOTE BOOK NO.		

FILE NAME: E:\PROJECT FILES\MFT340 South 18th\CADD_DRAWINGS\1010 PR03 MFT340.dgn

CITY OF QUINCY UTILITIES & ENGINEERING

USER NAME = mtunis	DESIGNED -	REVISED -
	DRAWN -	REVISED -
PLOT SCALE = 40.0001 ' / in.	CHECKED -	REVISED -
PLOT DATE = 12/30/2024	DATE -	REVISED -

CITY OF QUINCY, ILLINOIS

SOUTH 18TH STREET
PLAN & PROFILE

SCALE: 1" = 40' | SHEET 3 OF 8 SHEETS | STA. TO STA.

F.A.U. RTE.	SECTION	COUNTY	TOTAL SHEETS	SHEET NO.
7824	21-00340-00-RS	ADAMS	34	10

CONTRACT NO. 93830

ILLINOIS | FED. AID PROJECT

REMOVAL LEGEND

- HOT-MIX ASPALT SURFACE REMOVAL - BUTT JOINT
- PAVEMENT REMOVAL

ESTIMATED QUANTITIES TO BE DETERMINED DURING CONSTRUCTION BY THE ENGINEER:

PAVEMENT PATCHING, TYPE III, 8 INCH 200 SQ YD
PAVEMENT PATCHING, TYPE IV, 8 INCH 200 SQ YD

SEE SHEET 21 FOR GEOMETRIC DETAILS & LIMITS OF CONSTRUCTION AT S 18TH & MADISON

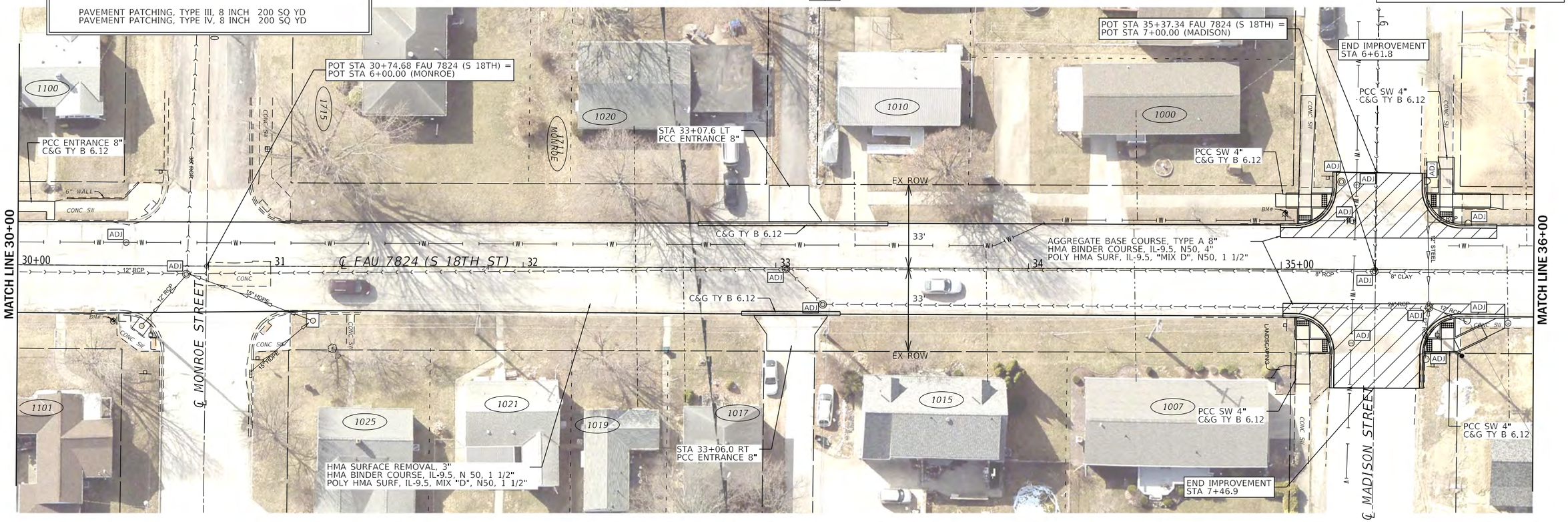

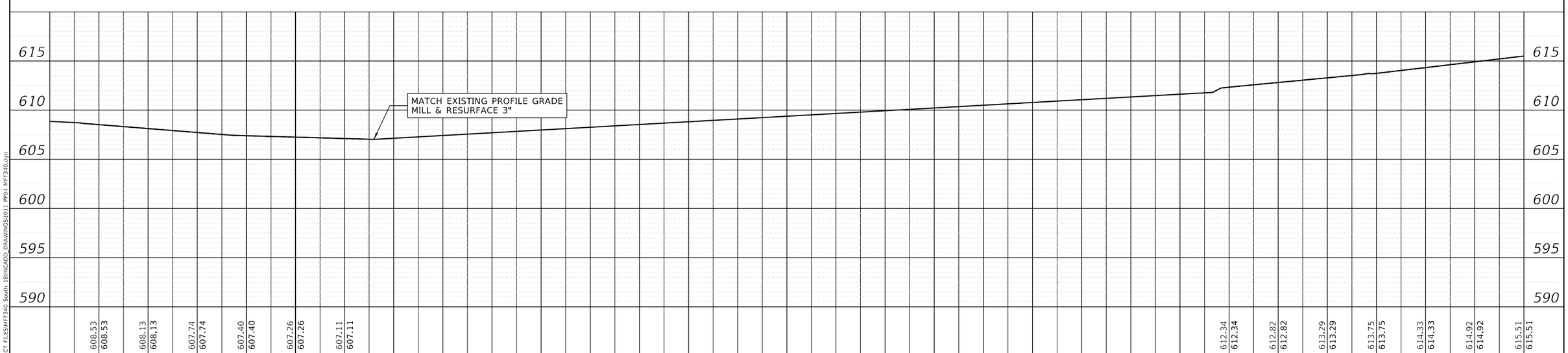

PLAN	BY	DATE
SURVEYED		
PLOTTED		
ALIGNMENT CHECKED		
RT. OF WAY CHECKED		
CADD FILE NAME		
NOTE BOOK NO.		

PROFILE	BY	DATE
SURVEYED		
PLOTTED		
GRADES CHECKED		
BM. NOTED		
STRUCTURE NOTAT'NS CH'KD		
NOTE BOOK NO.		

FILE NAME: E:\PROJECT FILES\MFT340 South 18th\CADD_DRAWINGS\0011 PP04 MFT340.dgn

CITY OF QUINCY UTILITIES & ENGINEERING

USER NAME = mtunis	DESIGNED -	REVISED -
	DRAWN -	REVISED -
PLOT SCALE = 40.0001 ' / in.	CHECKED -	REVISED -
PLOT DATE = 12/30/2024	DATE -	REVISED -

CITY OF QUINCY, ILLINOIS

SOUTH 18TH STREET
PLAN & PROFILE

SCALE: 1" = 40' | SHEET 4 OF 8 SHEETS | STA. TO STA.

F.A.U. RTE.	SECTION	COUNTY	TOTAL SHEETS	SHEET NO.
7824	21-00340-00-RS	ADAMS	34	11

CONTRACT NO. 93830

ILLINOIS | FED. AID PROJECT

ESTIMATED QUANTITIES TO BE DETERMINED DURING CONSTRUCTION BY THE ENGINEER:

PAVEMENT PATCHING, TYPE III, 8 INCH 200 SQ YD
PAVEMENT PATCHING, TYPE IV, 8 INCH 200 SQ YD

REMOVAL LEGEND

- HOT-MIX ASPALT SURFACE REMOVAL - BUTT JOINT
- PAVEMENT REMOVAL

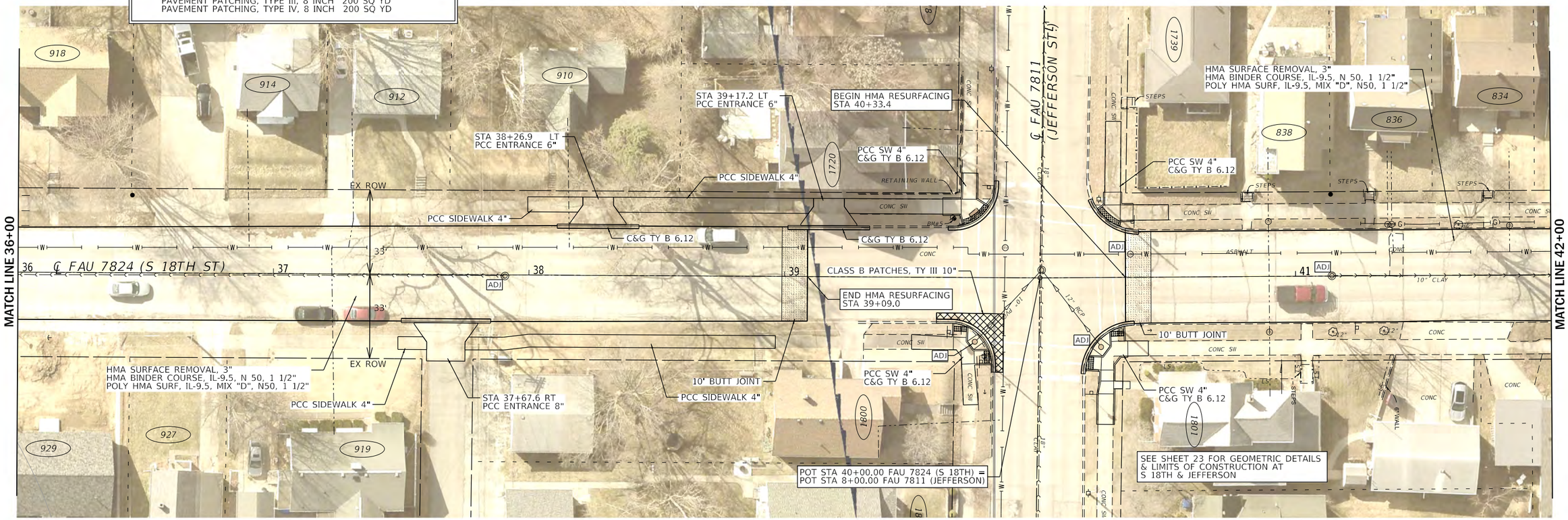

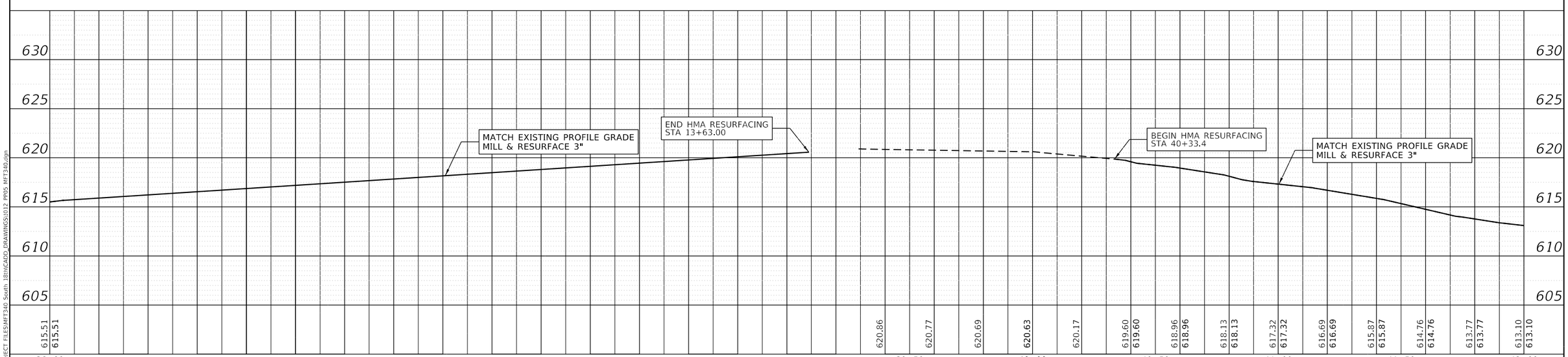

PLAN	BY	DATE
SURVEYED		
PLOTTED		
ALIGNMENT CHECKED		
RT. OF WAY CHECKED		
CADD FILE NAME		
NOTE BOOK NO.		

PROFILE	BY	DATE
SURVEYED		
PLOTTED		
GRADES CHECKED		
BM. NOTED		
STRUCTURE NOTAT'NS CH'KD		
NOTE BOOK NO.		

FILE NAME: E:\PROJECT FILES\MFT340 South 18th\CADD_DRAWINGS\0012 PR05 MFT340.dgn

CITY OF QUINCY UTILITIES & ENGINEERING

USER NAME = mtunis	DESIGNED -	REVISED -
	DRAWN -	REVISED -
PLOT SCALE = 40.0001 ' / in.	CHECKED -	REVISED -
PLOT DATE = 12/30/2024	DATE -	REVISED -

CITY OF QUINCY, ILLINOIS

SOUTH 18TH STREET
PLAN & PROFILE

SCALE: 1" = 40' | SHEET 5 OF 8 SHEETS | STA. TO STA.

F.A.U. RTE.	SECTION	COUNTY	TOTAL SHEETS	SHEET NO.
7824	21-00340-00-RS	ADAMS	34	12

CONTRACT NO. 93830

ILLINOIS | FED. AID PROJECT

REMOVAL LEGEND

- HOT-MIX ASPALT SURFACE REMOVAL - BUTT JOINT
- PAVEMENT REMOVAL

ESTIMATED QUANTITIES TO BE DETERMINED DURING CONSTRUCTION BY THE ENGINEER:

PAVEMENT PATCHING, TYPE III, 8 INCH 200 SQ YD
PAVEMENT PATCHING, TYPE IV, 8 INCH 200 SQ YD

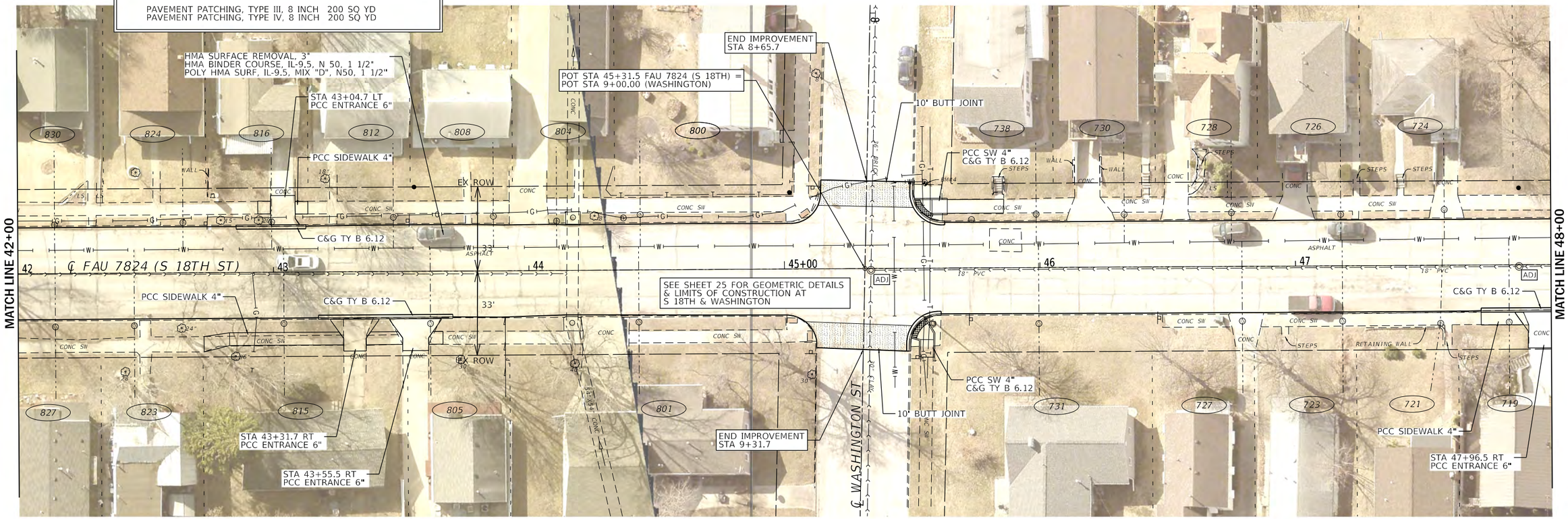

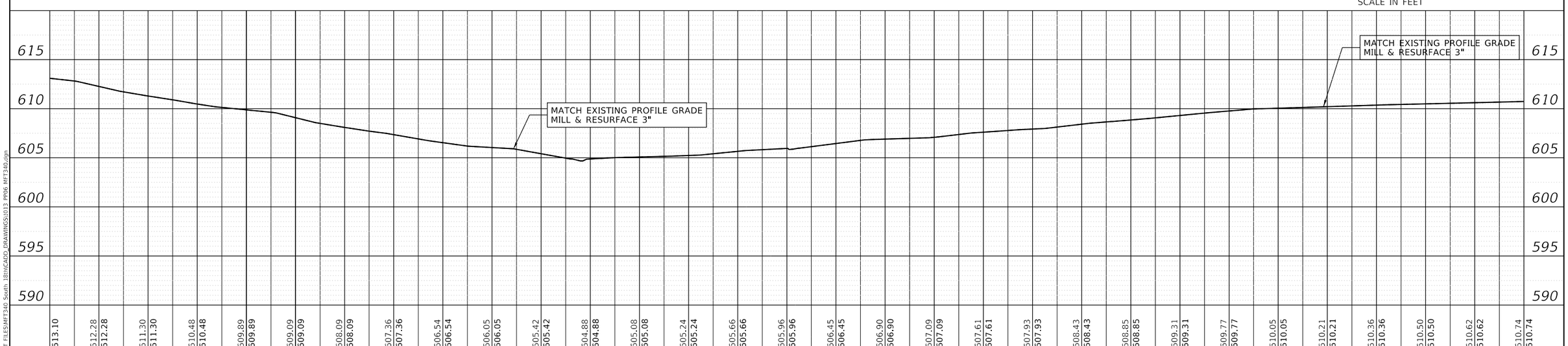

PLAN	BY	DATE
SURVEYED		
PLOTTED		
ALIGNMENT CHECKED		
RT. OF WAY CHECKED		
CADD FILE NAME		
NOTE BOOK NO.		

PROFILE	BY	DATE
SURVEYED		
PLOTTED		
GRADES CHECKED		
BM. NOTED		
STRUCTURE NOTAT'NS CH'KD		
NOTE BOOK NO.		

FILE NAME: E:\PROJECT FILES\MFT340 South 18th\CADD_DRAWINGS\0013 PP06 MFT340.dgn

CITY OF QUINCY UTILITIES & ENGINEERING

USER NAME = mtunis	DESIGNED -	REVISED -
	DRAWN -	REVISED -
PLOT SCALE = 40.0001 ' / in.	CHECKED -	REVISED -
PLOT DATE = 12/30/2024	DATE -	REVISED -

CITY OF QUINCY, ILLINOIS

SOUTH 18TH STREET
PLAN & PROFILE

SCALE: 1" = 40' | SHEET 6 OF 8 SHEETS | STA. | TO STA.

F.A.U. RTE.	SECTION	COUNTY	TOTAL SHEETS	SHEET NO.
7824	21-00340-00-RS	ADAMS	34	13

CONTRACT NO. 93830

ILLINOIS | FED. AID PROJECT

REMOVAL LEGEND

- HOT-MIX ASPALT SURFACE REMOVAL - BUTT JOINT
- PAVEMENT REMOVAL

ESTIMATED QUANTITIES TO BE DETERMINED DURING CONSTRUCTION BY THE ENGINEER:

PAVEMENT PATCHING, TYPE III, 8 INCH 200 SQ YD
PAVEMENT PATCHING, TYPE IV, 8 INCH 200 SQ YD

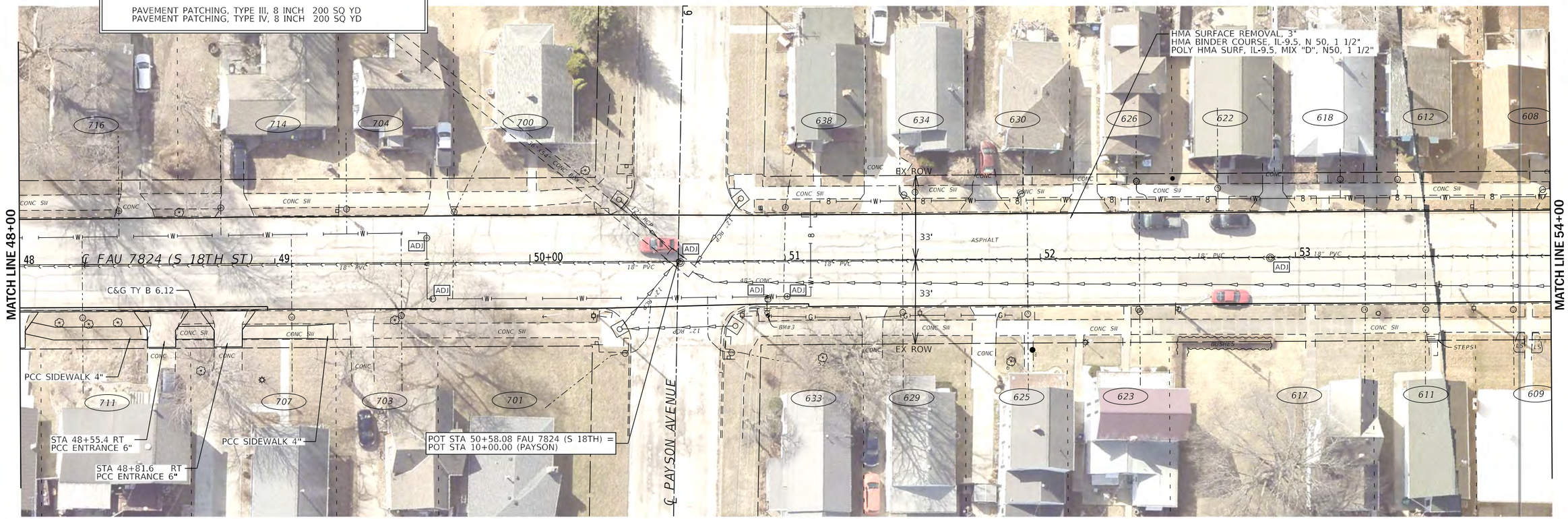

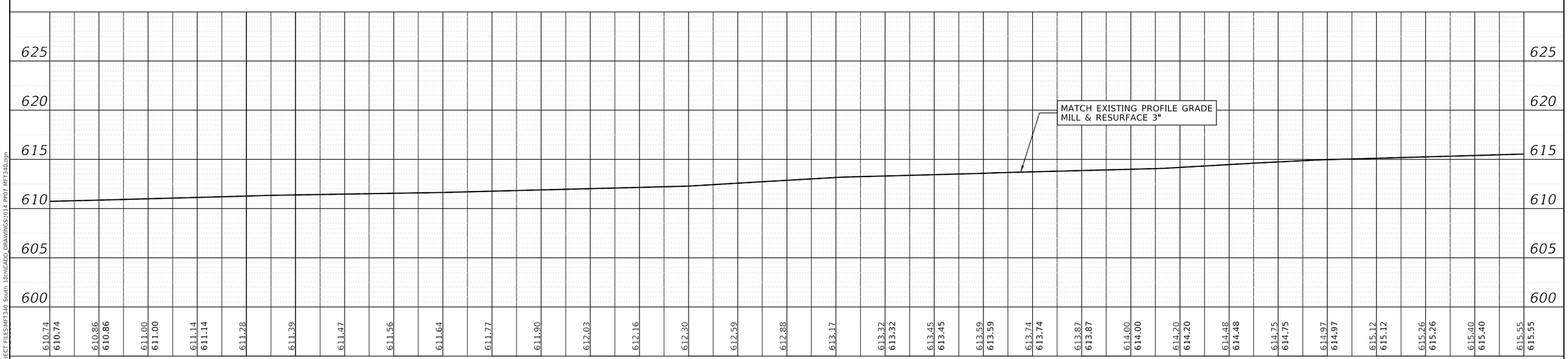

PLAN	BY	DATE
SURVEYED		
PLOTTED		
ALIGNMENT CHECKED		
RT. OF WAY CHECKED		
CADD FILE NAME		
NOTE BOOK NO.		

PROFILE	BY	DATE
SURVEYED		
PLOTTED		
GRADES CHECKED		
BM. NOTED		
STRUCTURE NOTAT'NS CH'KD		
NOTE BOOK NO.		

FILE NAME: E:\PROJECT FILES\MFT340 South 18th\CADD_DRAWINGS\0014 PR07 MFT340.dgn

CITY OF QUINCY UTILITIES & ENGINEERING

USER NAME = mtunis	DESIGNED -	REVISED -
	DRAWN -	REVISED -
PLOT SCALE = 40.0001 ' / in.	CHECKED -	REVISED -
PLOT DATE = 12/30/2024	DATE -	REVISED -

CITY OF QUINCY, ILLINOIS

SOUTH 18TH STREET
PLAN & PROFILE

SCALE: 1" = 40' | SHEET 7 OF 8 SHEETS | STA. TO STA.

F.A.U. RTE.	SECTION	COUNTY	TOTAL SHEETS	SHEET NO.
7824	21-00340-00-RS	ADAMS	34	14

CONTRACT NO. 93830

ILLINOIS | FED. AID PROJECT

ESTIMATED QUANTITIES TO BE DETERMINED DURING CONSTRUCTION BY THE ENGINEER:

PAVEMENT PATCHING, TYPE III, 8 INCH 200 SQ YD
PAVEMENT PATCHING, TYPE IV, 8 INCH 200 SQ YD

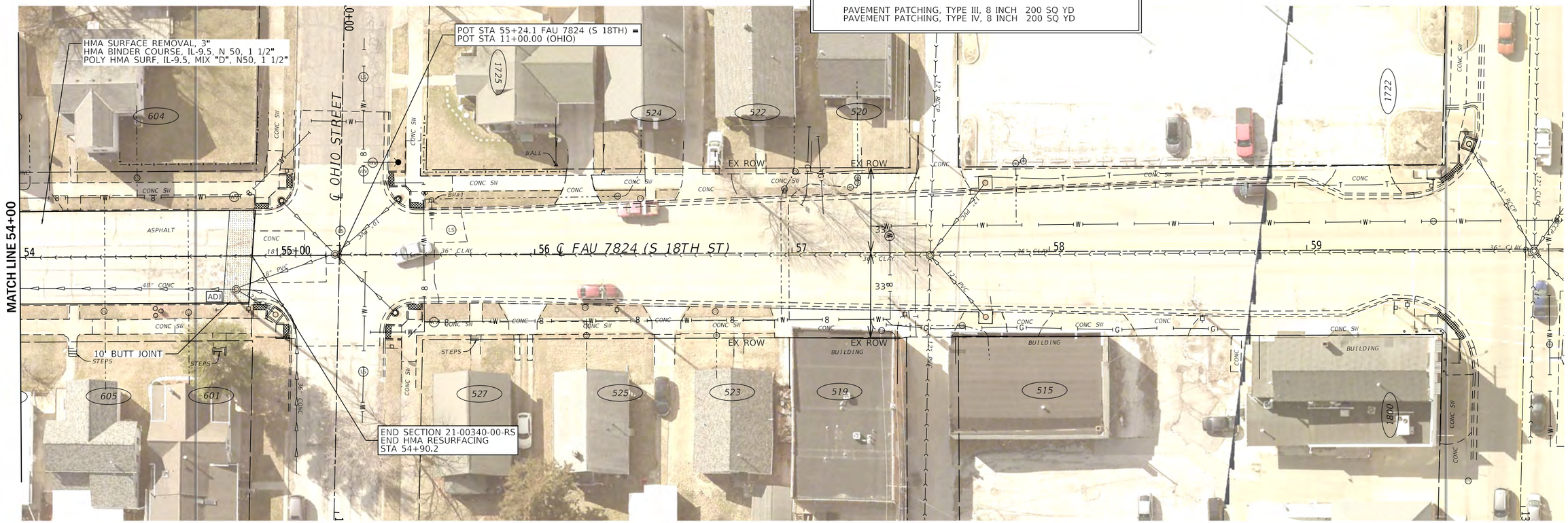

0 20 40 60
SCALE IN FEET

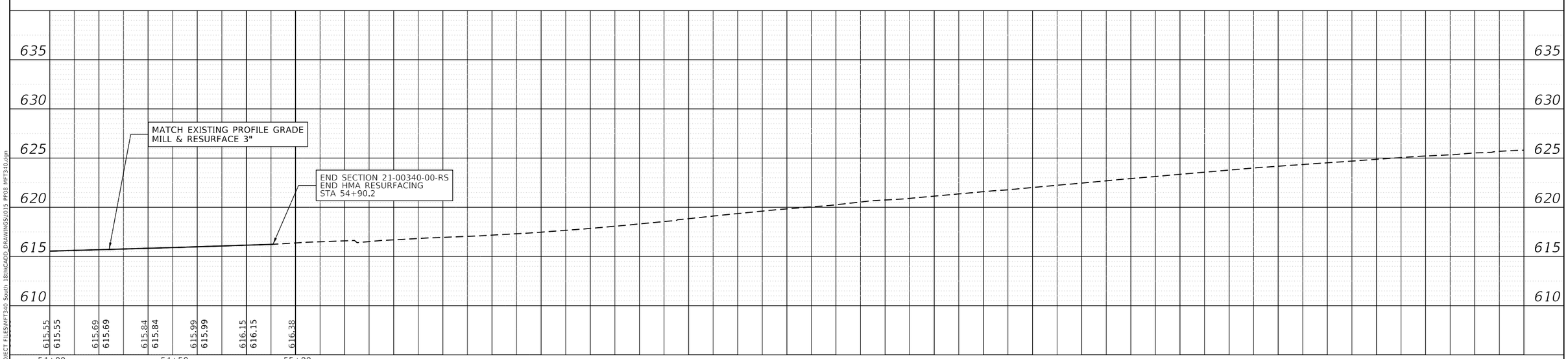

PLAN	BY	DATE
SURVEYED		
PLOTTED		
ALIGNMENT CHECKED		
RT. OF WAY CHECKED		
CADD FILE NAME		
NOTE BOOK NO.		

PROFILE	BY	DATE
SURVEYED		
PLOTTED		
GRADES CHECKED		
BM. NOTED		
STRUCTURE NOTAT'NS CH'KD		
NOTE BOOK NO.		

FILE NAME: E:\PROJECT FILES\MFT340 South 18th\CADD_DRAWINGS\0015 PR08 MFT340.dgn

CITY OF QUINCY UTILITIES & ENGINEERING

USER NAME = mtunis	DESIGNED -	REVISED -
	DRAWN -	REVISED -
PLOT SCALE = 40.0001 ' / in.	CHECKED -	REVISED -
PLOT DATE = 12/30/2024	DATE -	REVISED -

CITY OF QUINCY, ILLINOIS

SOUTH 18TH STREET
PLAN & PROFILE

SCALE: 1" = 40' | SHEET 8 OF 8 SHEETS | STA. TO STA.

F.A.U. RTE.	SECTION	COUNTY	TOTAL SHEETS	SHEET NO.
7824	21-00340-00-RS	ADAMS	34	15

CONTRACT NO. 93830

ILLINOIS | FED. AID PROJECT

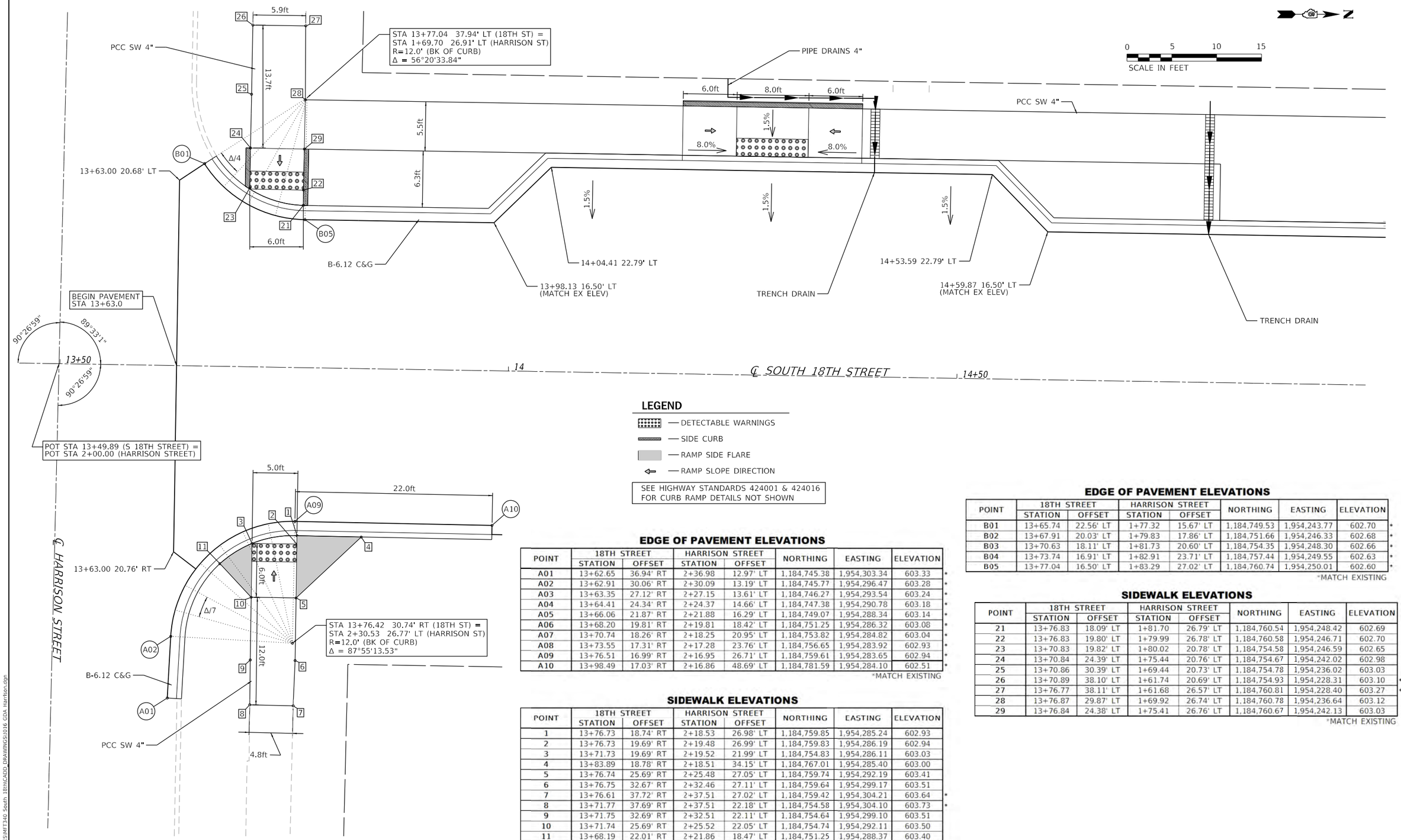

LEGEND

- DETECTABLE WARNINGS
- SIDE CURB
- RAMP SIDE FLARE
- RAMP SLOPE DIRECTION

SEE HIGHWAY STANDARDS 424001 & 424016
FOR CURB RAMP DETAILS NOT SHOWN

EDGE OF PAVEMENT ELEVATIONS

POINT	18TH STREET		HARRISON STREET		NORTHING	EASTING	ELEVATION	
	STATION	OFFSET	STATION	OFFSET				
A01	13+62.65	36.94' RT	2+36.98	12.97' LT	1,184,745.38	1,954,303.34	603.33	*
A02	13+62.91	30.06' RT	2+30.09	13.19' LT	1,184,745.77	1,954,296.47	603.28	*
A03	13+63.35	27.12' RT	2+27.15	13.61' LT	1,184,746.27	1,954,293.54	603.24	*
A04	13+64.41	24.34' RT	2+24.37	14.66' LT	1,184,747.38	1,954,290.78	603.18	*
A05	13+66.06	21.87' RT	2+21.88	16.29' LT	1,184,749.07	1,954,288.34	603.14	*
A06	13+68.20	19.81' RT	2+19.81	18.42' LT	1,184,751.25	1,954,286.32	603.08	*
A07	13+70.74	18.26' RT	2+18.25	20.95' LT	1,184,753.82	1,954,284.82	603.04	*
A08	13+73.55	17.31' RT	2+17.28	23.76' LT	1,184,756.65	1,954,283.92	602.93	*
A09	13+76.51	16.99' RT	2+16.95	26.71' LT	1,184,759.61	1,954,283.65	602.94	*
A10	13+98.49	17.03' RT	2+16.86	48.69' LT	1,184,781.59	1,954,284.10	602.51	*

*MATCH EXISTING

SIDEWALK ELEVATIONS

POINT	18TH STREET		HARRISON STREET		NORTHING	EASTING	ELEVATION	
	STATION	OFFSET	STATION	OFFSET				
1	13+76.73	18.74' RT	2+18.53	26.98' LT	1,184,759.85	1,954,285.24	602.93	
2	13+76.73	19.69' RT	2+19.48	26.99' LT	1,184,759.83	1,954,286.19	602.94	
3	13+71.73	19.69' RT	2+19.52	21.99' LT	1,184,754.83	1,954,286.11	603.03	
4	13+83.89	18.78' RT	2+18.51	34.15' LT	1,184,767.01	1,954,285.40	603.00	
5	13+76.74	25.69' RT	2+25.48	27.05' LT	1,184,759.74	1,954,292.19	603.41	
6	13+76.75	32.67' RT	2+32.46	27.11' LT	1,184,759.64	1,954,299.17	603.51	
7	13+76.61	37.72' RT	2+37.51	27.02' LT	1,184,759.42	1,954,304.21	603.64	*
8	13+71.77	37.69' RT	2+37.51	22.18' LT	1,184,754.58	1,954,304.10	603.73	*
9	13+71.75	32.69' RT	2+32.51	22.11' LT	1,184,754.64	1,954,299.10	603.51	
10	13+71.74	25.69' RT	2+25.52	22.05' LT	1,184,754.74	1,954,292.11	603.50	
11	13+68.19	22.01' RT	2+21.86	18.47' LT	1,184,751.25	1,954,288.37	603.40	

*MATCH EXISTING

EDGE OF PAVEMENT ELEVATIONS

POINT	18TH STREET		HARRISON STREET		NORTHING	EASTING	ELEVATION	
	STATION	OFFSET	STATION	OFFSET				
B01	13+65.74	22.56' LT	1+77.32	15.67' LT	1,184,749.53	1,954,243.77	602.70	*
B02	13+67.91	20.03' LT	1+79.83	17.86' LT	1,184,751.66	1,954,246.33	602.68	*
B03	13+70.63	18.11' LT	1+81.73	20.60' LT	1,184,754.35	1,954,248.30	602.66	*
B04	13+73.74	16.91' LT	1+82.91	23.71' LT	1,184,757.44	1,954,249.55	602.63	*
B05	13+77.04	16.50' LT	1+83.29	27.02' LT	1,184,760.74	1,954,250.01	602.60	*

*MATCH EXISTING

SIDEWALK ELEVATIONS

POINT	18TH STREET		HARRISON STREET		NORTHING	EASTING	ELEVATION	
	STATION	OFFSET	STATION	OFFSET				
21	13+76.83	18.09' LT	1+81.70	26.79' LT	1,184,760.54	1,954,248.42	602.69	
22	13+76.83	19.80' LT	1+79.99	26.78' LT	1,184,760.58	1,954,246.71	602.70	
23	13+70.83	19.82' LT	1+80.02	20.78' LT	1,184,754.58	1,954,246.59	602.65	
24	13+70.84	24.39' LT	1+75.44	20.76' LT	1,184,754.67	1,954,242.02	602.98	
25	13+70.86	30.39' LT	1+69.44	20.73' LT	1,184,754.78	1,954,236.02	603.03	
26	13+70.89	38.10' LT	1+61.74	20.69' LT	1,184,754.93	1,954,228.31	603.10	*
27	13+76.77	38.11' LT	1+61.68	26.57' LT	1,184,760.81	1,954,228.40	603.27	*
28	13+76.87	29.87' LT	1+69.92	26.74' LT	1,184,760.78	1,954,236.64	603.12	
29	13+76.84	24.38' LT	1+75.41	26.76' LT	1,184,760.67	1,954,242.13	603.03	

*MATCH EXISTING

MODEL: Default
FILE NAME: F:\PROJECT FILES\MFT340 South 18th\CADD_DRAWINGS\016 GDA Harrison.dgn

CITY OF QUINCY UTILITIES & ENGINEERING	USER NAME = mtunis	DESIGNED -	REVISED -
		DRAWN -	REVISED -
	PLOT SCALE = 10.0000 ft / in.	CHECKED -	REVISED -
	PLOT DATE = 12/30/2024	DATE -	REVISED -

CITY OF QUINCY, ILLINOIS

GEOMETRIC DETAILS
18TH & HARRISON

SCALE: 1" = 10' | SHEET 1 OF 11 SHEETS | STA. | TO STA.

F.A.U. RTE.	SECTION	COUNTY	TOTAL SHEETS	SHEET NO.
7824	21-00340-00-RS	ADAMS	34	16

CONTRACT NO. 93830

ILLINOIS | FED. AID PROJECT

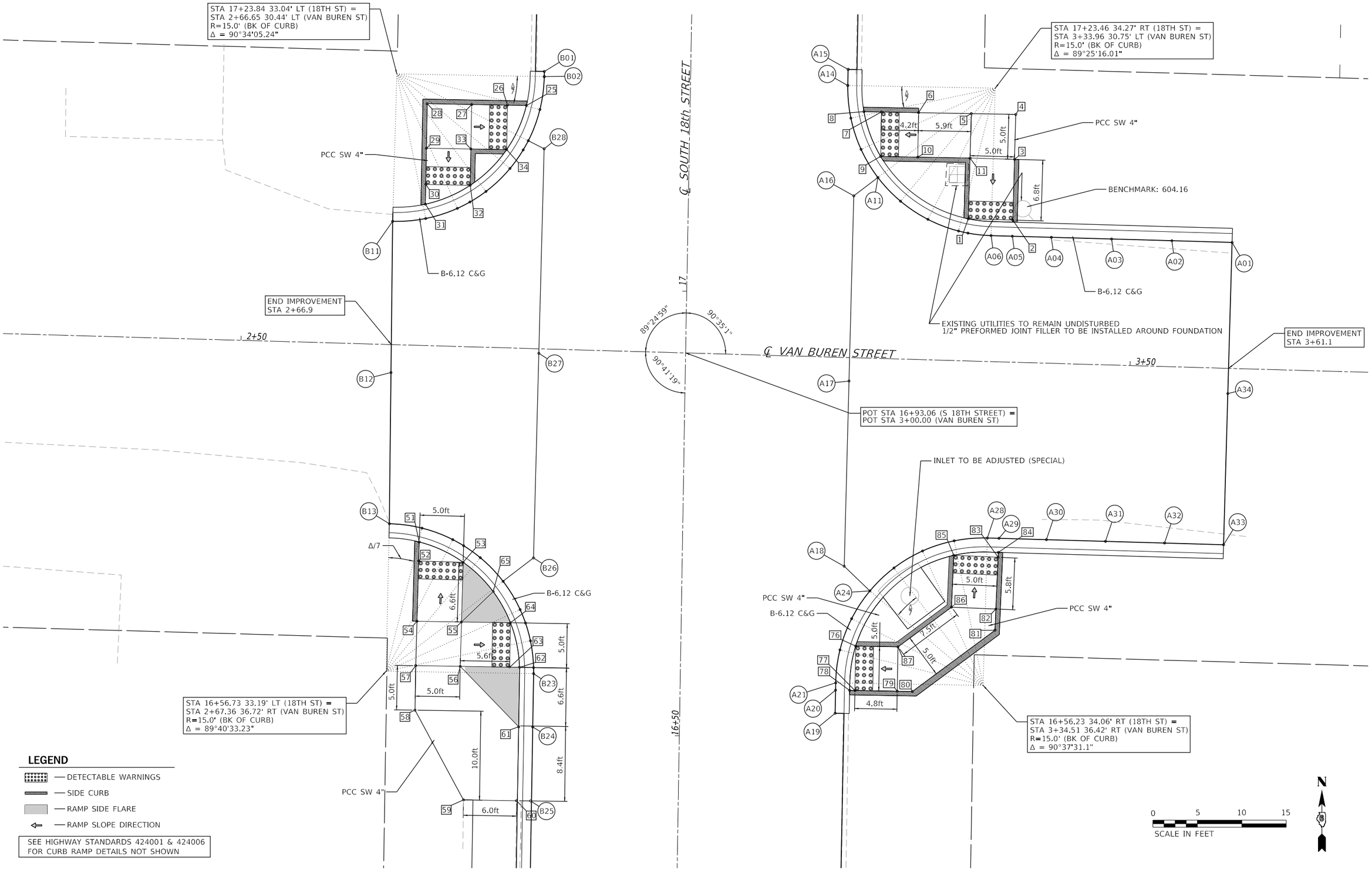

MODEL: Default
FILE NAME: F:\PROJECT FILES\MFT340 South 18th\CADD DRAWINGS\1017 GDB Van Buren.dgn

CITY OF QUINCY UTILITIES & ENGINEERING	USER NAME = mtunis	DESIGNED -	REVISED -	CITY OF QUINCY, ILLINOIS	GEOMETRIC DETAILS 18TH & VAN BUREN	F.A.U. RTE.	SECTION	COUNTY	TOTAL SHEETS	SHEET NO.
		DRAWN -	REVISED -			7824	21-00340-00-RS	ADAMS	34	17
	PLOT SCALE = 10.0000 ft / in.	CHECKED -	REVISED -					CONTRACT NO. 93830		
	PLOT DATE = 12/30/2024	DATE -	REVISED -		SCALE: 1" = 10' SHEET 2 OF 11 SHEETS STA. TO STA.		ILLINOIS	FED. AID PROJECT		

EDGE OF PAVEMENT ELEVATIONS

POINT	18TH STREET		VAN BUREN STREET		NORTHING	EASTING	ELEVATION	
	STATION	OFFSET	STATION	OFFSET				
B01	17+24.41	17.32' LT	2+83.23	31.19' LT	1,185,108.09	1,954,255.80	600.10	*
B02	17+23.83	17.32' LT	2+83.23	30.61' LT	1,185,107.51	1,954,255.79	600.12	*
B03	17+20.11	17.74' LT	2+82.85	26.89' LT	1,185,103.80	1,954,255.30	600.18	*
B04	17+16.59	18.98' LT	2+81.64	23.35' LT	1,185,100.30	1,954,253.99	600.25	*
B05	17+15.55	19.53' LT	2+81.10	22.30' LT	1,185,099.27	1,954,253.42	600.22	
B06	17+13.43	20.98' LT	2+79.67	20.18' LT	1,185,097.18	1,954,251.93	600.18	
B07	17+10.80	23.63' LT	2+77.05	17.52' LT	1,185,094.60	1,954,249.23	600.15	
B08	17+09.58	25.41' LT	2+75.28	16.28' LT	1,185,093.41	1,954,247.43	600.13	
B09	17+08.84	26.81' LT	2+73.89	15.52' LT	1,185,092.69	1,954,246.02	600.12	
B10	17+07.63	30.34' LT	2+70.36	14.28' LT	1,185,091.55	1,954,242.46	600.09	
B11	17+07.24	34.06' LT	2+66.65	13.86' LT	1,185,091.24	1,954,238.74	600.03	*
B12	16+90.24	33.93' LT	2+66.95	3.14' RT	1,185,074.24	1,954,238.55	600.31	*
B13	16+73.24	33.80' LT	2+67.25	20.14' RT	1,185,057.23	1,954,238.37	600.08	*
B14	16+72.81	30.12' LT	2+70.93	20.53' RT	1,185,056.74	1,954,242.04	600.20	
B15	16+71.58	26.63' LT	2+74.43	21.73' RT	1,185,055.45	1,954,245.50	600.28	
B16	16+70.93	25.40' LT	2+75.67	22.37' RT	1,185,054.77	1,954,246.72	600.32	
B17	16+69.61	23.50' LT	2+77.58	23.67' RT	1,185,053.42	1,954,248.60	600.40	
B18	16+66.99	20.89' LT	2+80.22	26.26' RT	1,185,050.75	1,954,251.16	600.60	*
B19	16+63.86	18.92' LT	2+82.22	29.37' RT	1,185,047.58	1,954,253.07	600.71	*
B20	16+62.37	18.28' LT	2+82.87	30.86' RT	1,185,046.07	1,954,253.68	600.73	*
B21	16+60.37	17.69' LT	2+83.48	32.85' RT	1,185,044.07	1,954,254.23	600.74	*
B22	16+57.37	17.29' LT	2+83.92	35.85' RT	1,185,041.06	1,954,254.58	600.78	*
B23	16+56.69	17.27' LT	2+83.94	36.52' RT	1,185,040.38	1,954,254.59	600.79	*
B24	16+50.69	17.26' LT	2+84.01	42.53' RT	1,185,034.38	1,954,254.49	600.85	*
B25	16+42.37	17.24' LT	2+84.11	50.85' RT	1,185,026.06	1,954,254.35	600.94	*
B26	16+69.70	17.52' LT	2+83.56	23.52' RT	1,185,053.39	1,954,254.58	MATCH	*
B27	16+92.71	17.35' LT	2+83.51	0.51' RT	1,185,076.39	1,954,255.18	MATCH	*
B28	17+15.72	17.18' LT	2+83.45	22.50' LT	1,185,099.40	1,954,255.77	MATCH	*

*MATCH EXISTING

SIDEWALK ELEVATIONS

POINT	18TH STREET		VAN BUREN STREET		NORTHING	EASTING	ELEVATION
	STATION	OFFSET	STATION	OFFSET			
25	17+20.55	19.26' LT	2+81.32	27.31' LT	1,185,104.26	1,954,253.78	600.20
26	17+20.54	21.39' LT	2+79.19	27.28' LT	1,185,104.30	1,954,251.65	600.22
27	17+20.54	25.41' LT	2+75.17	27.24' LT	1,185,104.37	1,954,247.63	600.45
28	17+20.54	30.41' LT	2+70.17	27.19' LT	1,185,104.47	1,954,242.63	600.49
29	17+15.54	30.41' LT	2+70.22	22.19' LT	1,185,099.47	1,954,242.54	600.41
30	17+11.46	30.41' LT	2+70.26	18.11' LT	1,185,095.38	1,954,242.46	600.11
31	17+09.24	30.41' LT	2+70.28	15.89' LT	1,185,093.16	1,954,242.42	600.10
32	17+11.46	25.41' LT	2+75.26	18.16' LT	1,185,095.29	1,954,247.46	600.14
33	17+15.54	25.41' LT	2+75.22	22.24' LT	1,185,099.38	1,954,247.54	600.44
34	17+15.54	21.39' LT	2+79.24	22.28' LT	1,185,099.30	1,954,251.56	600.21

SIDEWALK ELEVATIONS

POINT	18TH STREET		VAN BUREN STREET		NORTHING	EASTING	ELEVATION	
	STATION	OFFSET	STATION	OFFSET				
51	16+71.29	29.60' LT	2+70.67	22.12' RT	1,185,055.16	1,954,241.73	600.21	
52	16+69.11	29.63' LT	2+70.67	24.31' RT	1,185,052.97	1,954,241.67	600.23	
53	16+69.05	24.63' LT	2+75.67	24.31' RT	1,185,052.83	1,954,246.66	600.31	
54	16+62.40	29.71' LT	2+70.67	31.01' RT	1,185,046.27	1,954,241.48	600.77	
55	16+62.40	24.71' LT	2+75.67	30.95' RT	1,185,046.19	1,954,246.48	600.85	
56	16+57.40	24.77' LT	2+75.67	35.95' RT	1,185,041.19	1,954,246.33	600.85	
57	16+57.40	29.77' LT	2+70.67	36.01' RT	1,185,041.28	1,954,241.33	600.86	
58	16+52.40	29.77' LT	2+70.73	41.01' RT	1,185,036.28	1,954,241.25	600.94	
59	16+42.40	24.15' LT	2+76.46	50.94' RT	1,185,026.19	1,954,246.70	601.36	*
60	16+42.40	18.13' LT	2+82.43	50.87' RT	1,185,026.09	1,954,252.67	601.20	*
61	16+50.82	18.13' LT	2+82.32	42.45' RT	1,185,034.51	1,954,252.81	601.28	
62	16+57.40	18.20' LT	2+82.23	35.87' RT	1,185,041.09	1,954,252.89	600.78	
63	16+57.40	19.30' LT	2+81.13	35.88' RT	1,185,041.10	1,954,251.79	600.79	
64	16+62.40	19.30' LT	2+81.07	30.88' RT	1,185,046.10	1,954,251.88	600.72	
65	16+65.81	21.25' LT	2+79.08	27.50' RT	1,185,049.55	1,954,249.98	600.75	

*MATCH EXISTING

EDGE OF PAVEMENT ELEVATIONS

POINT	18TH STREET		VAN BUREN STREET		NORTHING	EASTING	ELEVATION	
	STATION	OFFSET	STATION	OFFSET				
A01	17+06.60	61.22' RT	3+61.08	14.16' LT	1,185,088.86	1,954,333.14	602.98	*
A02	17+06.67	54.44' RT	3+54.30	14.16' LT	1,185,089.05	1,954,326.36	602.30	
A03	17+06.74	47.66' RT	3+47.52	14.16' LT	1,185,089.25	1,954,319.58	601.50	
A04	17+06.81	40.88' RT	3+40.74	14.16' LT	1,185,089.44	1,954,312.81	600.95	
A05	17+06.85	36.50' RT	3+36.35	14.16' LT	1,185,089.56	1,954,308.42	600.76	
A06	17+06.87	34.10' RT	3+33.96	14.16' LT	1,185,089.63	1,954,306.03	600.72	
A07	17+07.11	31.50' RT	3+31.35	14.37' LT	1,185,089.91	1,954,303.43	600.68	
A08	17+07.32	30.44' RT	3+30.30	14.57' LT	1,185,090.15	1,954,302.37	600.66	
A09	17+08.57	26.97' RT	3+26.81	15.78' LT	1,185,091.46	1,954,298.93	600.59	
A10	17+10.55	23.86' RT	3+23.68	17.74' LT	1,185,093.50	1,954,295.85	600.51	
A11	17+13.17	21.26' RT	3+21.06	20.33' LT	1,185,096.16	1,954,293.30	600.43	*
A12	17+16.31	19.31' RT	3+19.07	23.44' LT	1,185,099.33	1,954,291.41	600.37	*
A13	17+19.79	18.10' RT	3+17.83	26.92' LT	1,185,102.84	1,954,290.26	600.30	*
A14	17+23.46	17.69' RT	3+17.38	30.58' LT	1,185,106.51	1,954,289.92	600.24	*
A15	17+25.27	17.69' RT	3+17.36	32.39' LT	1,185,108.32	1,954,289.95	600.17	*
A16	17+11.06	18.59' RT	3+18.41	18.19' LT	1,185,094.10	1,954,290.59	MATCH	*
A17	16+90.20	18.42' RT	3+18.46	2.64' RT	1,185,073.28	1,954,290.05	MATCH	*
A18	16+69.37	18.22' RT	3+18.51	23.47' RT	1,185,052.45	1,954,289.51	MATCH	*
A19	16+52.83	17.48' RT	3+17.96	40.02' RT	1,185,035.93	1,954,288.50	600.74	*
A20	16+55.42	17.48' RT	3+17.93	37.42' RT	1,185,038.52	1,954,288.54	600.73	*
A21	16+56.24	17.48' RT	3+17.92	36.60' RT	1,185,039.34	1,954,288.56	600.72	*
A22	16+59.96	17.91' RT	3+18.30	32.88' RT	1,185,043.05	1,954,289.04	600.71	*
A23	16+63.48	19.15' RT	3+19.51	29.34' RT	1,185,046.55	1,954,290.35	600.65	*
A24	16+66.64	21.16' RT	3+21.48	26.16' RT	1,185,049.68	1,954,292.40	600.55	*
A25	16+69.27	23.82' RT	3+24.11	23.50' RT	1,185,052.26	1,954,295.11	600.50	
A26	16+71.23	27.00' RT	3+27.26	21.50' RT	1,185,054.17	1,954,298.32	600.65	
A27	16+72.43	30.54' RT	3+30.79	20.26' RT	1,185,055.31	1,954,301.88	600.81	
A28	16+72.81	34.26' RT	3+34.51	19.84' RT	1,185,055.63	1,954,305.61	600.87	
A29	16+72.79	35.57' RT	3+35.81	19.84' RT	1,185,055.59	1,954,306.91	600.89	
A30	16+72.73	40.91' RT	3+41.15	19.84' RT	1,185,055.44	1,954,312.25	601.08	
A31	16+72.65	47.55' RT	3+47.79	19.84' RT	1,185,055.25	1,954,318.89	601.63	
A32	16+72.57	54.19' RT	3+54.44	19.84' RT	1,185,055.06	1,954,325.53	602.43	
A33	16+72.49	60.84' RT	3+61.08	19.84' RT	1,185,054.88	1,954,332.17	603.11	*
A34	16+89.49	61.04' RT	3+61.08	2.84' RT	1,185,071.87	1,954,332.65	603.32	*

*MATCH EXISTING

SIDEWALK ELEVATIONS

POINT	18TH STREET		VAN BUREN STREET		NORTHING	EASTING	ELEVATION
	STATION	OFFSET	STATION	OFFSET			
1	17+08.71	31.51' RT	3+31.35	15.97' LT	1,185,091.52	1,954,303.47	600.67
2	17+08.66	36.51' RT	3+36.35	15.97' LT	1,185,091.38	1,954,308.47	600.75
3	17+15.50	36.58' RT	3+36.35	22.81' LT	1,185,098.21	1,954,308.66	600.90
4	17+20.55	36.63' RT	3+36.35	27.86' LT	1,185,103.26	1,954,308.81	600.82
5	17+20.55	31.63' RT	3+31.35	27.81' LT	1,185,103.35	1,954,303.81	600.72
6	17+20.55	25.70' RT	3+25.42	27.75' LT	1,185,103.46	1,954,297.88	600.65
7	17+20.55	21.53' RT	3+21.25	27.71' LT	1,185,103.53	1,954,293.70	600.32
8	17+20.55	19.56' RT	3+19.28	27.69' LT	1,185,103.57	1,954,291.73	600.31
9	17+15.55	21.53' RT	3+21.30	22.71' LT	1,185,098.53	1,954,293.61	600.40
10	17+15.55	25.70' RT	3+25.47	22.75' LT	1,185,098.46	1,954,297.79	600.73
11	17+15.55	31.58' RT	3+31.35	22.81' LT	1,185,098.35	1,954,303.67	600.82

SIDEWALK ELEVATIONS

POINT	18TH STREET		VAN BUREN STREET		NORTHING	EASTING	ELEVATION
	STATION	OFFSET	STATION	OFFSET			
76	16+60.42	19.66' RT	3+20.05	32.40' RT	1,185,043.48	1,954,290.80	600.71
77	16+55.42	19.66' RT	3+20.11	37.40' RT	1,185,038.48	1,954,290.72	600.72
78	16+55.42	19.06' RT	3+19.51	37.41' RT	1,185,038.49	1,954,290.12	600.71
79	16+55.41	24.41' RT	3+24.87	37.35' RT	1,185,038.40	1,954,295.47	601.10
80	16+55.41	26.11' RT	3+26.57	37.33' RT	1,185,038.37	1,954,297.17	601.12
81	16+62.45	35.29' RT	3+35.66	30.18' RT	1,185,045.26	1,954,306.47	601.20
82	16+64.83	35.36' RT	3+35.70	27.80' RT	1,185,047.64	1,954,306.57	601.24
83	16+70.67	35.52' RT	3+35.78	21.96' RT	1,185,053.47	1,954,306.82	600.89
84	16+71.21	35.53' RT	3+35.79	21.42' RT	1,185,054.01	1,954,306.85	600.88
85	16+70.80	30.52' RT	3+30.78	21.89' RT	1,185,053.68	1,954,301.83	600.80
86	16+64.97	30.36' RT	3+30.70	27.72' RT	1,185,047.86	1,954,301.58	601.15
87	16+60.41	24.42' RT	3+24.81	32.35' RT	1,185,043.40	1,954,295.56	601.09

LEGEND

- DETECTABLE WARNINGS
- SIDE CURB
- RAMP SIDE FLARE
- RAMP SLOPE DIRECTION

SEE HIGHWAY STANDARD 424001
FOR CURB RAMP DETAILS NOT SHOWN

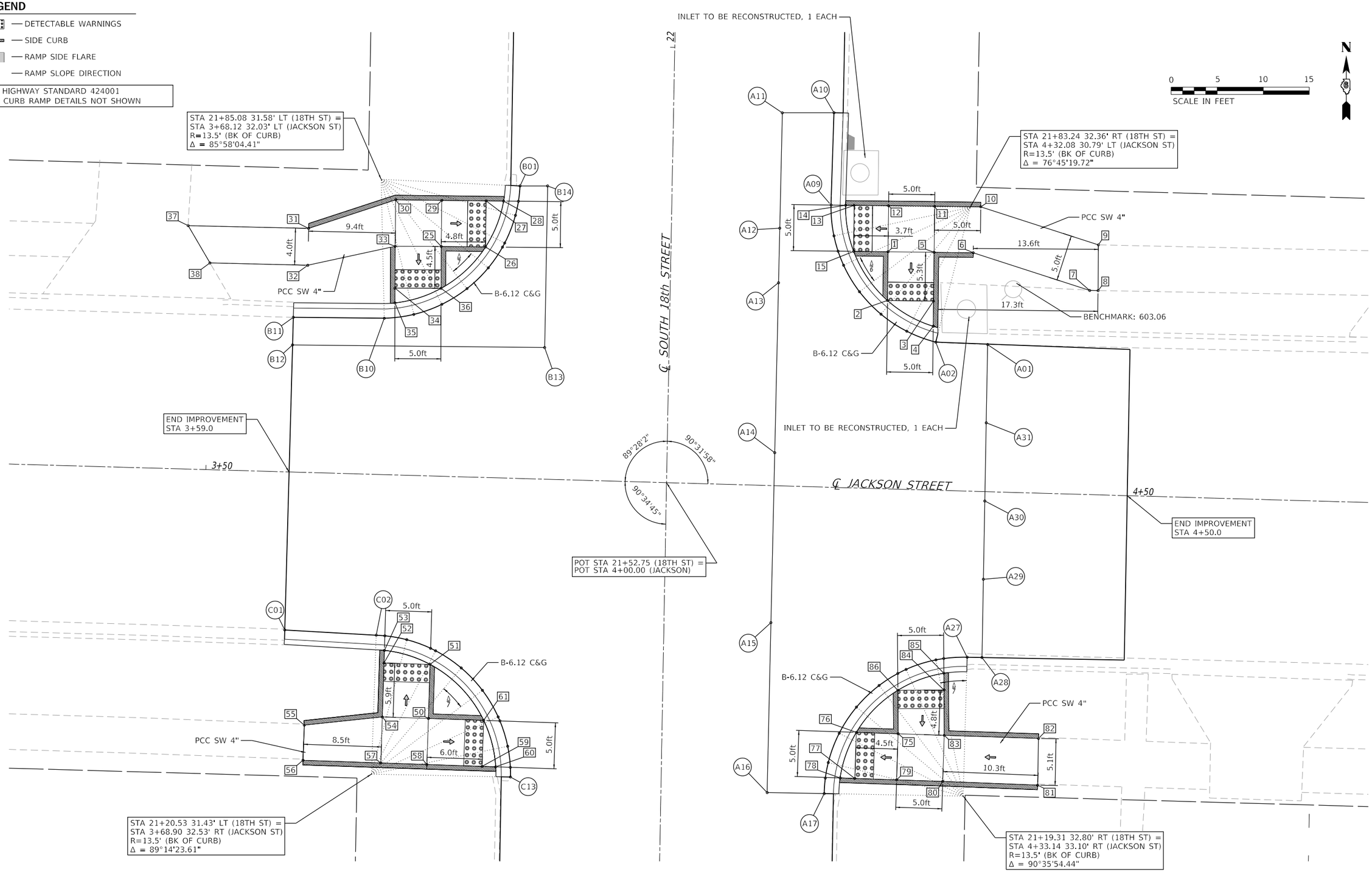

MODEL: Default
FILE NAME: F:\PROJECT FILES\MFT340 South 18th\CADD DRAWINGS\1019 GDC Jackson.dgn

CITY OF QUINCY UTILITIES & ENGINEERING	USER NAME = mtunis	DESIGNED -	REVISED -	CITY OF QUINCY, ILLINOIS	GEOMETRIC DETAILS 18TH & JACKSON	F.A.U. RTE.	SECTION	COUNTY	TOTAL SHEETS	SHEET NO.
		DRAWN -	REVISED -			7824	21-00340-00-RS	ADAMS	34	19
	PLOT SCALE = 10.0000 ft / in.	CHECKED -	REVISED -					CONTRACT NO. 93830		
	PLOT DATE = 12/30/2024	DATE -	REVISED -		SCALE: 1" = 10' SHEET 4 OF 11 SHEETS STA. TO STA.			ILLINOIS FED. AID PROJECT		

EDGE OF PAVEMENT ELEVATIONS

POINT	18TH STREET		JACKSON STREET		NORTHING	EASTING	ELEVATION	
	STATION	OFFSET	STATION	OFFSET				
B01	21+84.64	16.51' LT	3+83.20	31.74' LT	1,185,568.26	1,954,264.14	601.11	*
B02	21+82.98	16.65' LT	3+83.07	30.08' LT	1,185,566.60	1,954,263.97	601.01	
B03	21+81.45	16.94' LT	3+82.79	28.54' LT	1,185,565.07	1,954,263.65	600.96	
B04	21+78.42	18.05' LT	3+81.71	25.50' LT	1,185,562.06	1,954,262.48	600.84	
B05	21+77.97	18.28' LT	3+81.49	25.05' LT	1,185,561.62	1,954,262.24	600.82	
B06	21+75.69	19.78' LT	3+80.01	22.76' LT	1,185,559.37	1,954,260.70	600.76	
B07	21+73.39	22.04' LT	3+77.77	20.44' LT	1,185,557.11	1,954,258.39	600.71	
B08	21+71.63	24.75' LT	3+75.08	18.65' LT	1,185,555.40	1,954,255.66	600.65	
B09	21+70.48	27.76' LT	3+72.07	17.48' LT	1,185,554.31	1,954,252.62	600.59	
B10	21+70.01	30.95' LT	3+68.89	16.97' LT	1,185,553.89	1,954,249.42	600.49	
B11	21+69.92	40.83' LT	3+59.02	16.79' LT	1,185,554.00	1,954,239.55	599.96	*
B12	21+66.92	40.85' LT	3+59.02	13.79' LT	1,185,551.00	1,954,239.47	600.04	*
B13	21+67.15	13.50' LT	3+86.37	14.28' LT	1,185,550.71	1,954,266.82	600.48	*
B14	21+84.70	13.51' LT	3+86.20	31.83' LT	1,185,568.26	1,954,267.14	601.22	*

*MATCH EXISTING

SIDEWALK ELEVATIONS

POINT	18TH STREET		JACKSON STREET		NORTHING	EASTING	ELEVATION	
	STATION	OFFSET	STATION	OFFSET				
25	21+77.91	24.92' LT	3+74.84	24.93' LT	1,185,561.68	1,954,255.60	601.01	
26	21+77.95	20.12' LT	3+79.65	25.02' LT	1,185,561.64	1,954,260.41	600.81	
27	21+82.95	20.15' LT	3+79.57	30.02' LT	1,185,566.63	1,954,260.47	601.03	
28	21+82.97	18.25' LT	3+81.47	30.05' LT	1,185,566.61	1,954,262.37	601.02	
29	21+82.91	24.96' LT	3+74.76	29.93' LT	1,185,566.68	1,954,255.66	601.09	
30	21+82.88	29.96' LT	3+69.76	29.86' LT	1,185,566.75	1,954,250.66	601.01	
31	21+79.60	39.35' LT	3+60.41	26.49' LT	1,185,563.65	1,954,241.21	600.67	
32	21+75.60	39.36' LT	3+60.43	22.49' LT	1,185,559.65	1,954,241.12	600.52	
33	21+77.84	29.92' LT	3+69.84	24.81' LT	1,185,561.70	1,954,250.60	600.93	
34	21+73.30	29.86' LT	3+69.96	20.27' LT	1,185,557.16	1,954,250.58	600.58	
35	21+71.69	29.83' LT	3+69.99	18.66' LT	1,185,555.56	1,954,250.58	600.56	
36	21+73.37	24.86' LT	3+74.95	20.39' LT	1,185,557.14	1,954,255.58	600.66	
37	21+79.67	53.47' LT	3+47.27	26.41' LT	1,185,563.95	1,954,228.08	600.50	*
38	21+75.67	51.00' LT	3+49.78	22.44' LT	1,185,559.90	1,954,230.48	600.27	*

*MATCH EXISTING

EDGE OF PAVEMENT ELEVATIONS

POINT	18TH STREET		JACKSON STREET		NORTHING	EASTING	ELEVATION	
	STATION	OFFSET	STATION	OFFSET				
C01	21+36.01	41.13' LT	3+59.04	17.15' RT	1,185,520.06	1,954,238.62	599.51	*
C02	21+35.62	31.19' LT	3+68.99	17.45' RT	1,185,519.49	1,954,248.55	599.55	*
C03	21+35.57	30.25' LT	3+69.92	17.48' RT	1,185,519.43	1,954,249.48	599.54	*
C04	21+35.19	27.86' LT	3+72.31	17.84' RT	1,185,519.00	1,954,251.86	599.53	*
C05	21+34.30	25.27' LT	3+74.92	18.70' RT	1,185,518.07	1,954,254.44	599.46	*
C06	21+34.04	24.72' LT	3+75.47	18.95' RT	1,185,517.80	1,954,254.99	599.45	*
C07	21+32.23	21.90' LT	3+78.31	20.74' RT	1,185,515.93	1,954,257.77	599.41	*
C08	21+29.84	19.56' LT	3+80.68	23.11' RT	1,185,513.50	1,954,260.07	599.25	*
C09	21+26.99	17.80' LT	3+82.46	25.94' RT	1,185,510.62	1,954,261.78	599.11	*
C10	21+26.56	17.60' LT	3+82.66	26.36' RT	1,185,510.19	1,954,261.96	599.10	*
C11	21+23.82	16.71' LT	3+83.58	29.09' RT	1,185,507.43	1,954,262.81	599.00	*
C12	21+21.54	16.38' LT	3+83.94	31.37' RT	1,185,505.15	1,954,263.10	598.99	*
C13	21+20.49	16.35' LT	3+83.98	32.42' RT	1,185,504.10	1,954,263.11	598.86	*

*MATCH EXISTING

SIDEWALK ELEVATIONS

POINT	18TH STREET		JACKSON STREET		NORTHING	EASTING	ELEVATION	
	STATION	OFFSET	STATION	OFFSET				
50	21+26.68	25.36' LT	3+74.90	26.32' RT	1,185,510.45	1,954,254.21	599.46	
51	21+32.56	25.29' LT	3+74.92	20.44' RT	1,185,516.32	1,954,254.39	599.45	
52	21+32.62	30.29' LT	3+69.92	20.43' RT	1,185,516.48	1,954,249.39	599.54	
53	21+33.98	30.27' LT	3+69.92	19.07' RT	1,185,517.84	1,954,249.43	599.53	
54	21+26.74	30.36' LT	3+69.90	26.31' RT	1,185,510.60	1,954,249.21	599.54	
55	21+25.71	38.81' LT	3+61.46	27.42' RT	1,185,509.73	1,954,240.74	600.05	*
56	21+21.90	38.89' LT	3+61.42	31.24' RT	1,185,505.92	1,954,240.60	600.11	*
57	21+21.76	30.44' LT	3+69.87	31.29' RT	1,185,505.63	1,954,249.04	599.46	
58	21+21.69	25.44' LT	3+74.87	31.32' RT	1,185,505.46	1,954,254.04	599.37	
59	21+21.59	19.44' LT	3+80.87	31.35' RT	1,185,505.25	1,954,260.03	598.89	
60	21+21.57	17.97' LT	3+82.35	31.36' RT	1,185,505.20	1,954,261.51	598.88	
61	21+26.59	19.36' LT	3+80.90	26.35' RT	1,185,510.25	1,954,260.20	599.11	

*MATCH EXISTING

EDGE OF PAVEMENT ELEVATIONS

POINT	18TH STREET		JACKSON STREET		NORTHING	EASTING	ELEVATION	
	STATION	OFFSET	STATION	OFFSET				
A01	21+68.39	34.55' RT	4+34.41	15.97' LT	1,185,551.04	1,954,314.88	600.12	*
A02	21+68.55	28.92' RT	4+28.77	16.07' LT	1,185,551.30	1,954,309.26	600.20	
A03	21+69.68	25.76' RT	4+25.60	17.17' LT	1,185,552.49	1,954,306.11	600.25	
A04	21+71.47	22.92' RT	4+22.74	18.94' LT	1,185,554.34	1,954,303.31	600.30	
A05	21+73.86	20.55' RT	4+20.35	21.30' LT	1,185,556.77	1,954,300.99	600.52	
A06	21+76.71	18.76' RT	4+18.54	24.13' LT	1,185,559.65	1,954,299.26	600.73	
A07	21+78.22	18.14' RT	4+17.90	25.64' LT	1,185,561.18	1,954,298.66	600.84	
A08	21+79.88	17.66' RT	4+17.40	27.30' LT	1,185,562.84	1,954,298.21	600.88	
A09	21+83.22	17.28' RT	4+16.99	30.63' LT	1,185,566.19	1,954,297.89	600.81	
A10	21+93.24	17.41' RT	4+17.03	40.65' LT	1,185,576.20	1,954,298.22	601.58	*
A11	21+93.12	11.80' RT	4+11.43	40.48' LT	1,185,576.19	1,954,292.61	601.89	*
A12	21+80.59	11.76' RT	4+11.50	27.95' LT	1,185,563.67	1,954,292.33	601.29	*
A13	21+74.67	11.74' RT	4+11.54	22.03' LT	1,185,557.75	1,954,292.20	601.09	*
A14	21+56.22	11.68' RT	4+11.65	3.58' LT	1,185,539.30	1,954,291.78	600.37	*
A15	21+37.76	11.61' RT	4+11.76	14.87' RT	1,185,520.85	1,954,291.37	599.66	*
A16	21+19.31	11.53' RT	4+11.87	33.32' RT	1,185,502.41	1,954,290.96	598.91	*
A17	21+19.31	17.72' RT	4+18.06	33.26' RT	1,185,502.29	1,954,297.15	598.72	*
A18	21+20.99	17.81' RT	4+18.14	31.57' RT	1,185,503.98	1,954,297.28	598.80	
A19	21+22.69	18.10' RT	4+18.41	29.88' RT	1,185,505.67	1,954,297.59	598.88	
A20	21+25.89	19.23' RT	4+19.50	26.66' RT	1,185,508.85	1,954,298.78	599.03	
A21	21+28.77	21.05' RT	4+21.29	23.77' RT	1,185,511.69	1,954,300.65	599.14	
A22	21+31.16	23.47' RT	4+23.68	21.35' RT	1,185,514.04	1,954,303.11	599.25	
A23	21+32.49	25.46' RT	4+25.67	20.00' RT	1,185,515.33	1,954,305.13	599.33	
A24	21+32.95	26.36' RT	4+26.56	19.53' RT	1,185,515.78	1,954,306.03	599.35	
A25	21+34.05	29.57' RT	4+29.76	18.40' RT	1,185,516.81	1,954,309.27	599.40	
A26	21+34.21	30.42' RT	4+30.61	18.23' RT	1,185,516.96	1,954,310.12	599.41	
A27	21+34.39	32.96' RT	4+33.14	18.02' RT	1,185,517.10	1,954,312.66	599.46	
A28	21+34.39	34.56' RT	4+34.75	18.00' RT	1,185,517.07	1,954,314.27	599.50	*
A29	21+42.89	34.56' RT	4+34.66	9.51' RT	1,185,525.56	1,954,314.42	599.86	*
A30	21+51.38	34.56' RT	4+34.58	1.02' RT	1,185,534.06	1,954,314.58	600.19	*
A31	21+59.90	34.56' RT	4+34.49	7.48' LT	1,185,542.55	1,954,314.73	600.23	*

*MATCH EXISTING

SIDEWALK ELEVATIONS

POINT	18TH STREET		JACKSON STREET		NORTHING	EASTING	ELEVATION	
	STATION	OFFSET	STATION	OFFSET				
1	21+78.26	23.56' RT	4+23.32	25.73' LT	1,185,561.11	1,954,304.08	600.72	
2	21+72.97	23.59' RT	4+23.40	20.44' LT	1,185,555.82	1,954,304.01	600.29	
3	21+73.01	28.59' RT	4+28.40	20.52' LT	1,185,555.76	1,954,309.01	600.21	
4	21+70.27	28.61' RT	4+28.45	17.78' LT	1,185,553.02	1,954,308.98	600.19	
5	21+78.29	28.56' RT	4+28.32	25.81' LT	1,185,561.05	1,954,309.08	600.64	
6	21+78.32	32.80' RT	4+32.56	25.88' LT	1,185,561.00	1,954,313.32	600.70	
7	21+74.47	45.51' RT	4+45.30	22.15' LT	1,185,556.91	1,954,325.95	600.94	
8	21+74.48	46.42' RT	4+46.22	22.16' LT	1,185,556.90	1,954,326.87	600.96	*
9	21+79.44	46.36' RT	4+46.11	27.12' LT	1,185,561.86	1,954,326.90	601.06	*
10	21+83.33	33.52' RT	4+33.24	30.89' LT	1,185,565.99	1,954,314.14	600.78	
11	21+83.29	28.52' RT	4+28.24	30.81' LT	1,185,566.05	1,954,309.14	600.73	
12	21+83.26	23.52' RT	4+23.24	30.73' LT	1,185,566.11	1,954,304.14	600.82	
13	21+83.23	19.79' RT	4+19.50	30.67' LT	1,185,566.16	1,954,300.40	600.81	
14	21+83.23	18.86' RT	4+18.58	30.65' LT	1,185,566.17	1,954,299.48	600.80	
15	21+78.23	19.82' RT	4+19.58	25.67' LT	1,185,561.16	1,954,300.34	600.61	

*MATCH EXISTING

SIDEWALK ELEVATIONS

POINT	18TH STREET		JACKSON STREET		NORTHING	EASTING	ELEVATION	
	STATION	OFFSET	STATION	OFFSET				
75	21+25.95	25.63' RT	4+25.90	26.54' RT	1,185,508.79	1,954,305.18	599.27	
76	21+26.02	21.09' RT	4+21.36	26.52' RT	1,185,508.94	1,954,300.64	599.02	
77	21+21.02	21.01' RT	4+21.33	31.52' RT	1,185,503.94	1,954,300.47	598.82	
78	21+21.04	19.42' RT	4+19.74	31.51' RT	1,185,504.00	1,954,298.88	598.81	
79	21+20.95	25.55' RT	4+25.87	31.54' RT	1,185,503.79	1,954,305.01	599.18	
80	21+20.87	30.55' RT	4+30.88	31.56' RT	1,185,503.63	1,954,310.01	599.27	
81	21+20.65	40.86' RT	4+41.18	31.69' RT	1,185,503.21	1,954,320.31	599.83	*
82	21+25.72	40.86' RT	4+41.13	26.61' RT	1,185,508.28	1,954,320.40	599.87	*
83	21+25.87	30.63' RT	4+30.90	26.56' RT	1,185,508.62	1,954,310.18	599.33	
84	21+30.80	30.51' RT	4+30.73	21.64' RT	1,185,513.55	1,954,310.14	599.41	
85	21+32.61	30.46' RT	4+30.67	19.83' RT	1,185,515.36	1,954,310.13	599.40	
86	21+30.67	25.51' RT	4+25.73	21.82' RT	1,185,513.52	1,954,305.14	599.32	

*MATCH EXISTING

LEGEND

- DETECTABLE WARNINGS
- SIDE CURB
- RAMP SIDE FLARE
- RAMP SLOPE DIRECTION

SEE HIGHWAY STANDARD 424001
FOR CURB RAMP DETAILS NOT SHOWN

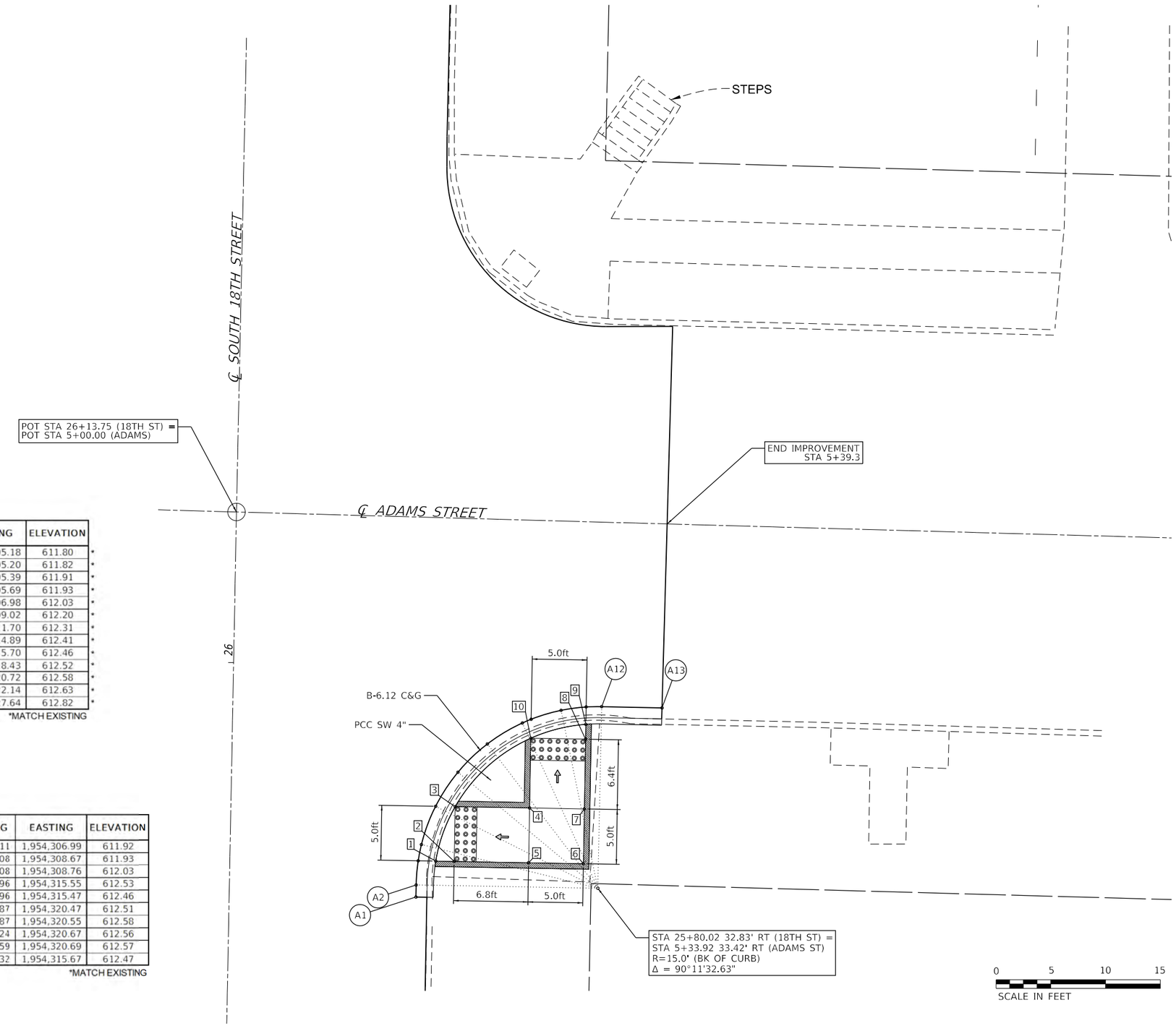

EDGE OF PAVEMENT ELEVATIONS

POINT	18TH STREET		ADAMS STREET		NORTHING	EASTING	ELEVATION	
	STATION	OFFSET	STATION	OFFSET				
A01	25+78.91	16.25' RT	5+17.35	34.68' RT	1,185,961.82	1,954,305.18	611.80	*
A02	25+80.01	16.25' RT	5+17.34	33.58' RT	1,185,962.93	1,954,305.20	611.82	*
A03	25+82.23	16.39' RT	5+17.47	31.37' RT	1,185,965.13	1,954,305.39	611.91	*
A04	25+83.71	16.66' RT	5+17.72	29.88' RT	1,185,966.62	1,954,305.69	611.93	*
A05	25+87.22	17.89' RT	5+18.92	26.36' RT	1,185,970.10	1,954,306.98	612.03	*
A06	25+90.37	19.87' RT	5+20.87	23.19' RT	1,185,973.22	1,954,309.02	612.20	*
A07	25+93.00	22.51' RT	5+23.48	20.54' RT	1,185,975.80	1,954,311.70	612.31	*
A08	25+94.98	25.66' RT	5+26.62	18.53' RT	1,185,977.71	1,954,314.89	612.41	*
A09	25+95.33	26.46' RT	5+27.41	18.17' RT	1,185,978.05	1,954,315.70	612.46	*
A10	25+96.20	29.18' RT	5+30.12	17.28' RT	1,185,978.87	1,954,318.43	612.52	*
A11	25+96.55	31.46' RT	5+32.40	16.91' RT	1,185,979.18	1,954,320.72	612.58	*
A12	25+96.61	32.88' RT	5+33.82	16.84' RT	1,185,979.21	1,954,322.14	612.63	*
A13	25+96.59	38.38' RT	5+39.32	16.80' RT	1,185,979.09	1,954,327.64	612.82	*

*MATCH EXISTING

SIDEWALK ELEVATIONS

POINT	18TH STREET		ADAMS STREET		NORTHING	EASTING	ELEVATION
	STATION	OFFSET	STATION	OFFSET			
1	25+82.23	17.99' RT	5+19.06	31.35' RT	1,185,965.11	1,954,306.99	611.92
2	25+82.23	19.68' RT	5+20.75	31.33' RT	1,185,965.08	1,954,308.67	611.93
3	25+87.23	19.67' RT	5+20.70	26.33' RT	1,185,970.08	1,954,308.76	612.03
4	25+87.23	26.47' RT	5+27.49	26.27' RT	1,185,969.96	1,954,315.55	612.53
5	25+82.23	26.47' RT	5+27.54	31.27' RT	1,185,964.96	1,954,315.47	612.46
6	25+82.24	31.47' RT	5+32.54	31.22' RT	1,185,964.87	1,954,320.47	612.51
7	25+87.24	31.47' RT	5+32.49	26.22' RT	1,185,969.87	1,954,320.55	612.58
8	25+93.61	31.46' RT	5+32.43	19.85' RT	1,185,976.24	1,954,320.67	612.56
9	25+94.96	31.46' RT	5+32.42	18.49' RT	1,185,977.59	1,954,320.69	612.57
10	25+93.60	26.46' RT	5+27.43	19.90' RT	1,185,976.32	1,954,315.67	612.47

*MATCH EXISTING

MODEL: Default
FILE NAME: F:\PROJECT FILES\MFT340 South 18th\CADD_DRAWINGS\021 GDD Adams.dgn

CITY OF QUINCY UTILITIES & ENGINEERING

USER NAME = mtunis	DESIGNED -	REVISED -
	DRAWN -	REVISED -
PLOT SCALE = 10.0000 ft / in.	CHECKED -	REVISED -
PLOT DATE = 12/30/2024	DATE -	REVISED -

CITY OF QUINCY, ILLINOIS

GEOMETRIC DETAILS
18TH & ADAMS

SCALE: 1" = 10' | SHEET 6 OF 11 SHEETS | STA. TO STA.

F.A.U. RTE.	SECTION	COUNTY	TOTAL SHEETS	SHEET NO.
7824	21-00340-00-RS	ADAMS	34	21

CONTRACT NO. 93830

ILLINOIS | FED. AID PROJECT

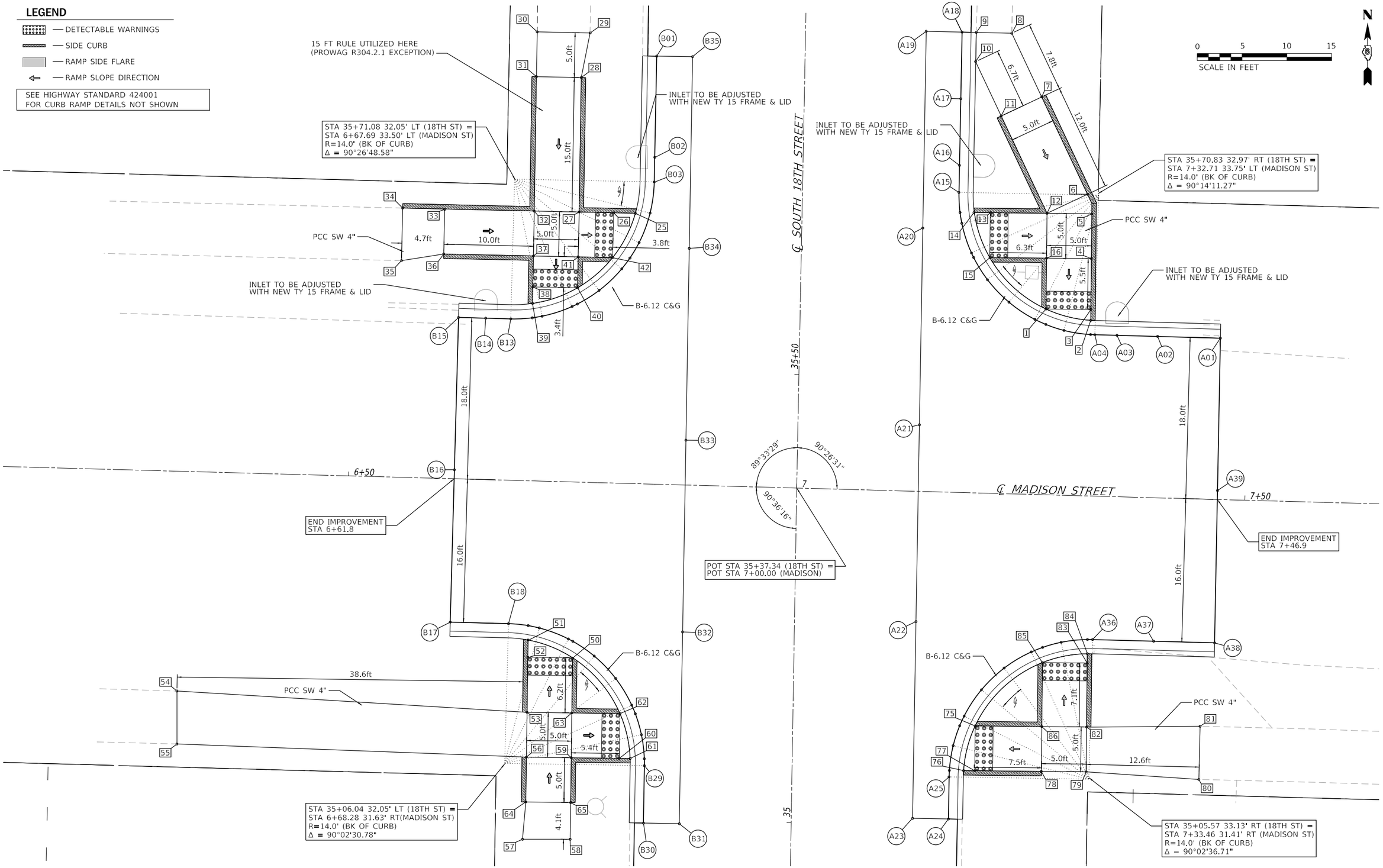

MODEL: Default
FILE NAME: F:\PROJECT FILES\MFT340 South 18th\CADD DRAWINGS\1022 GDE Madison.dgn

CITY OF QUINCY UTILITIES & ENGINEERING	USER NAME = mtunis	DESIGNED -	REVISED -	CITY OF QUINCY, ILLINOIS
		DRAWN -	REVISED -	
	PLOT SCALE = 10.0000 ft / in.	CHECKED -	REVISED -	
	PLOT DATE = 12/30/2024	DATE -	REVISED -	

GEOMETRIC DETAILS
18TH & MADISON

SCALE: 1" = 10' | SHEET 7 OF 11 SHEETS | STA. TO STA.

F.A.U. RTE.	SECTION	COUNTY	TOTAL SHEETS	SHEET NO.
7824	21-00340-00-RS	ADAMS	34	22
		CONTRACT NO. 93830		
	ILLINOIS	FED. AID PROJECT		

EDGE OF PAVEMENT ELEVATIONS

POINT	18TH STREET		MADISON STREET		NORTHING	EASTING	ELEVATION	
	STATION	OFFSET	STATION	OFFSET				
B01	35+85.20	16.55' LT	6+83.08	47.74' LT	1,186,968.57	1,954,290.64	614.14	*
B02	35+73.92	16.55' LT	6+83.17	36.45' LT	1,186,957.29	1,954,290.42	613.80	
B03	35+71.17	16.55' LT	6+83.19	33.70' LT	1,186,954.54	1,954,290.37	613.90	
B04	35+67.68	16.95' LT	6+82.82	30.22' LT	1,186,951.06	1,954,289.90	613.87	
B05	35+64.38	18.11' LT	6+81.68	26.90' LT	1,186,947.78	1,954,288.68	613.85	
B06	35+62.63	19.10' LT	6+80.71	25.15' LT	1,186,946.05	1,954,287.65	613.84	
B07	35+61.41	19.98' LT	6+79.83	23.92' LT	1,186,944.85	1,954,286.75	613.82	
B08	35+58.94	22.47' LT	6+77.36	21.43' LT	1,186,942.43	1,954,284.21	613.77	
B09	35+57.39	24.86' LT	6+74.99	19.86' LT	1,186,940.92	1,954,281.79	613.73	
B10	35+57.09	25.45' LT	6+74.40	19.56' LT	1,186,940.64	1,954,281.20	613.72	
B11	35+55.95	28.77' LT	6+71.09	18.39' LT	1,186,939.56	1,954,277.86	613.66	
B12	35+55.75	29.86' LT	6+70.00	18.19' LT	1,186,939.38	1,954,276.76	613.68	
B13	35+55.59	32.25' LT	6+67.61	18.00' LT	1,186,939.26	1,954,274.36	613.65	
B14	35+55.61	35.06' LT	6+64.80	18.00' LT	1,186,939.34	1,954,271.56	613.62	
B15	35+55.63	38.08' LT	6+61.78	18.00' LT	1,186,939.42	1,954,268.54	613.70	*
B16	35+38.63	38.22' LT	6+61.78	1.00' LT	1,186,922.43	1,954,268.07	MATCH	*
B17	35+21.74	38.39' LT	6+61.77	16.00' RT	1,186,905.43	1,954,267.61	613.72	*
B18	35+21.67	31.89' LT	6+68.27	16.00' RT	1,186,905.26	1,954,274.11	613.19	
B19	35+21.49	29.69' LT	6+70.48	16.16' RT	1,186,905.04	1,954,276.31	613.00	
B20	35+21.25	28.45' LT	6+71.72	16.39' RT	1,186,904.78	1,954,277.54	612.99	
B21	35+20.08	25.19' LT	6+74.99	17.52' RT	1,186,903.55	1,954,280.78	612.95	
B22	35+19.82	24.69' LT	6+75.50	17.78' RT	1,186,903.29	1,954,281.28	612.94	
B23	35+18.21	22.27' LT	6+77.94	19.36' RT	1,186,901.64	1,954,283.67	612.86	
B24	35+15.75	19.83' LT	6+80.40	21.79' RT	1,186,899.14	1,954,286.07	612.76	
B25	35+12.81	18.00' LT	6+82.26	24.72' RT	1,186,896.16	1,954,287.85	612.66	
B26	35+11.86	17.58' LT	6+82.69	25.66' RT	1,186,895.21	1,954,288.25	612.64	
B27	35+09.53	16.86' LT	6+83.44	27.98' RT	1,186,892.87	1,954,288.94	612.56	
B28	35+06.86	16.49' LT	6+83.83	30.65' RT	1,186,890.19	1,954,289.26	612.51	
B29	35+06.09	16.47' LT	6+83.86	31.42' RT	1,186,889.42	1,954,289.27	612.47	
B30	34+99.68	16.47' LT	6+83.93	37.83' RT	1,186,883.02	1,954,289.16	612.22	*
B31	34+99.68	12.47' LT	6+87.93	37.79' RT	1,186,882.95	1,954,293.16	MATCH	*
B32	35+21.08	12.46' LT	6+87.71	16.39' RT	1,186,904.34	1,954,293.53	MATCH	*
B33	35+42.44	12.46' LT	6+87.50	5.00' LT	1,186,925.73	1,954,293.90	MATCH	*
B34	35+63.83	12.51' LT	6+87.29	26.40' LT	1,186,947.12	1,954,294.27	MATCH	*
B35	35+85.23	12.55' LT	6+87.08	47.79' LT	1,186,968.52	1,954,294.64	MATCH	*

*MATCH EXISTING

SIDEWALK ELEVATIONS

POINT	18TH STREET		MADISON STREET		NORTHING	EASTING	ELEVATION	
	STATION	OFFSET	STATION	OFFSET				
25	35+67.63	18.59' LT	6+81.18	30.15' LT	1,186,951.04	1,954,288.26	613.86	
26	35+67.64	21.02' LT	6+78.75	30.14' LT	1,186,951.09	1,954,285.83	613.87	
27	35+67.65	24.86' LT	6+74.91	30.12' LT	1,186,951.18	1,954,282.00	614.05	
28	35+82.65	24.92' LT	6+74.73	45.12' LT	1,186,966.18	1,954,282.23	615.29	
29	35+87.65	24.03' LT	6+75.58	50.13' LT	1,186,971.16	1,954,283.21	615.42	*
30	35+87.66	29.93' LT	6+69.68	50.09' LT	1,186,971.28	1,954,277.31	615.46	*
31	35+82.66	29.92' LT	6+69.73	45.09' LT	1,186,966.28	1,954,277.23	615.25	
32	35+67.66	29.87' LT	6+69.90	30.09' LT	1,186,951.28	1,954,276.98	614.01	
33	35+67.66	39.87' LT	6+59.90	30.02' LT	1,186,951.48	1,954,266.98	614.83	
34	35+67.71	44.56' LT	6+55.21	30.03' LT	1,186,951.63	1,954,262.30	615.01	*
35	35+61.85	44.57' LT	6+55.24	24.17' LT	1,186,945.76	1,954,262.17	614.71	*
36	35+62.68	39.87' LT	6+59.93	25.03' LT	1,186,946.50	1,954,266.88	614.77	
37	35+62.64	29.87' LT	6+69.93	25.07' LT	1,186,946.27	1,954,276.88	613.95	
38	35+59.19	29.87' LT	6+69.97	21.63' LT	1,186,942.82	1,954,276.82	613.68	
39	35+57.35	29.86' LT	6+69.99	19.79' LT	1,186,940.99	1,954,276.79	613.67	
40	35+59.20	24.87' LT	6+74.97	21.68' LT	1,186,942.74	1,954,281.82	613.72	
41	35+62.65	24.87' LT	6+74.93	25.12' LT	1,186,946.18	1,954,281.88	613.99	
42	35+62.64	21.03' LT	6+78.77	25.14' LT	1,186,946.10	1,954,285.72	613.84	

*MATCH EXISTING

SIDEWALK ELEVATIONS

POINT	18TH STREET		MADISON STREET		NORTHING	EASTING	ELEVATION	
	STATION	OFFSET	STATION	OFFSET				
50	35+17.99	24.68' LT	6+75.52	19.61' RT	1,186,901.46	1,954,281.26	612.93	
51	35+19.89	29.69' LT	6+70.50	17.76' RT	1,186,903.44	1,954,276.28	612.99	
52	35+17.97	29.68' LT	6+70.52	19.67' RT	1,186,901.52	1,954,276.26	613.00	
53	35+11.82	29.66' LT	6+70.61	25.82' RT	1,186,895.37	1,954,276.17	613.07	
54	35+13.55	68.75' LT	6+31.51	24.51' RT	1,186,897.75	1,954,237.12	614.83	*
55	35+07.64	68.65' LT	6+31.67	30.42' RT	1,186,891.84	1,954,237.12	614.80	*
56	35+06.82	29.65' LT	6+70.68	30.82' RT	1,186,890.37	1,954,276.11	612.98	
57	34+97.65	29.93' LT	6+70.49	40.00' RT	1,186,881.21	1,954,275.67	613.56	*
58	34+97.74	24.62' LT	6+75.80	39.85' RT	1,186,881.21	1,954,280.98	613.32	*
59	35+06.84	24.65' LT	6+75.68	30.76' RT	1,186,890.31	1,954,281.10	612.91	
60	35+06.85	19.28' LT	6+81.04	30.68' RT	1,186,890.23	1,954,286.47	612.53	
61	35+06.86	18.08' LT	6+82.24	30.67' RT	1,186,890.22	1,954,287.67	612.52	
62	35+11.85	19.30' LT	6+80.97	25.68' RT	1,186,895.23	1,954,286.54	612.63	
63	35+11.84	24.66' LT	6+75.61	25.76' RT	1,186,895.30	1,954,281.17	613.00	
64	35+01.82	29.63' LT	6+70.74	35.82' RT	1,186,885.37	1,954,276.04	613.38	
65	35+01.84	24.63' LT	6+75.74	35.76' RT	1,186,885.31	1,954,281.04	613.31	

*MATCH EXISTING

EDGE OF PAVEMENT ELEVATIONS

POINT	18TH STREET		MADISON STREET		NORTHING	EASTING	ELEVATION	
	STATION	OFFSET	STATION	OFFSET				
A01	35+54.97	46.93' RT	7+46.79	18.00' LT	1,186,937.11	1,954,353.52	613.07	*
A02	35+55.03	39.92' RT	7+39.79	18.00' LT	1,186,937.30	1,954,346.52	613.02	
A03	35+55.06	35.39' RT	7+35.25	18.00' LT	1,186,937.43	1,954,341.98	612.95	
A04	35+55.08	32.92' RT	7+32.78	18.00' LT	1,186,937.49	1,954,339.51	612.99	
A05	35+55.09	32.44' RT	7+32.31	18.01' LT	1,186,937.51	1,954,339.04	613.00	
A06	35+55.50	29.47' RT	7+29.33	18.39' LT	1,186,937.97	1,954,336.07	613.04	
A07	35+56.12	27.43' RT	7+27.29	19.00' LT	1,186,938.64	1,954,334.05	613.06	
A08	35+56.66	26.20' RT	7+26.05	19.53' LT	1,186,939.20	1,954,332.83	613.17	
A09	35+58.53	23.27' RT	7+23.10	21.37' LT	1,186,941.12	1,954,329.93	613.46	
A10	35+60.99	20.82' RT	7+20.64	23.81' LT	1,186,943.63	1,954,327.53	613.76	
A11	35+63.44	19.23' RT	7+19.03	26.26' LT	1,186,946.12	1,954,325.99	614.01	
A12	35+63.94	18.98' RT	7+18.78	26.74' LT	1,186,946.61	1,954,325.75	614.00	
A13	35+67.22	17.84' RT	7+17.61	30.02' LT	1,186,949.92	1,954,324.68	614.02	
A14	35+68.43	17.61' RT	7+17.37	31.23' LT	1,186,951.13	1,954,324.47	614.03	
A15	35+70.67	17.45' RT	7+17.20	33.46' LT	1,186,953.37	1,954,324.36	614.13	
A16	35+73.68	17.45' RT	7+17.17	36.48' LT	1,186,956.39	1,954,324.41	614.10	
A17	35+81.11	17.45' RT	7+17.12	43.91' LT	1,186,963.82	1,954,324.56	614.28	
A18	35+88.55	17.45' RT	7+17.06	51.35' LT	1,186,971.25	1,954,324.70	614.53	*
A19	35+88.56	13.45' RT	7+13.06	51.33' LT	1,186,971.34	1,954,320.70	MATCH	*
A20	35+66.61	13.50' RT	7+13.27	29.38' LT	1,186,949.40	1,954,320.32	MATCH	*
A21	35+44.66	13.55' RT	7+13.49	7.43' LT	1,186,927.45	1,954,319.94	MATCH	*
A22	35+22.67	13.55' RT	7+13.71	14.53' RT	1,186,905.50	1,954,319.56	MATCH	*
A23	35+00.71	13.53' RT	7+13.92	36.48' RT	1,186,883.55	1,954,319.18	MATCH	*
A24	35+00.71	17.53' RT	7+17.92	36.44' RT	1,186,883.47	1,954,323.18	611.84	*
A25	35+05.40	17.53' RT	7+17.87	31.75' RT	1,186,888.17	1,954,323.26	612.06	
A26	35+06.12	17.55' RT	7+17.88	31.03' RT	1,186,888.88	1,954,323.29	612.07	
A27	35+08.89	17.93' RT	7+18.23	28.25' RT	1,186,891.65	1,954,323.71	612.14	
A28	35+11.12	18.62' RT	7+18.90	26.01' RT	1,186,893.87	1,954,324.44	612.19	
A29	35+12.21	19.10' RT	7+19.36	24.93' RT	1,186,894.94	1,954,324.93	612.22	
A30	35+15.17	20.98' RT	7+21.21	21.94' RT	1,186,897.88	1,954,326.86	612.32	
A31	35+17.64	23.48' RT	7+23.68	19.44' RT	1,186,900.31	1,954,329.40	612.42	
A32	35+19.49	26.46' RT	7+26.65	17.56' RT	1,186,902.11	1,954,332.42	612.52	
A33	35+20.02	27.72' RT	7+27.90	17.02' RT	1,186,902.62	1,954,333.68	612.56	
A34	35+20.63	29.79' RT	7+29.96	16.40' RT	1,186,903.19	1,954,335.76	612.59	
A35	35+20.98	32.71' RT	7+32.88	16.01' RT	1,186,903.49	1,954,338.69	612.63	
A36	35+20.98	33.28' RT	7+33.45	16.00' RT	1,186,903.49	1,954,339.26	612.64	
A37	35+20.91	40.09' RT	7+40.26	16.00' RT	1,186,903.30	1,954,346.07	612.60	
A38	35+20.84	46.90' RT	7+47.07	16.00' RT	1,186,903.12	1,954,352.87	613.09	*
A39	35+37.97	46.94' RT	7+46.93	1.00' LT	1,186,920.11	1,954,353.20	MATCH	*

*MATCH EXISTING

SIDEWALK ELEVATIONS

POINT	18TH STREET		MADISON STREET		NORTHING	EASTING	ELEVATION
	STATION	OFFSET	STATION	OFFSET			
1	35+57.84	27.42' RT	7+27.26	20.72' LT	1,186,940.36	1,954,334.07	613.07
2	35+56.68	32.43' RT	7+32.28	19.59' LT	1,186,939.10	1,954,339.06	613.01
3	35+57.89	32.42' RT	7+32.26	20.80' LT	1,186,940.31	1,954,339.07	613.02
4	35+63.57	32.37' RT	7+32.16	26.48' LT	1,186,945.99	1,954,339.13	613.46
5	35+68.57	32.32' RT	7+32.08	31.48' LT	1,186,950.98	1,954,339.18	613.54
6	35+70.74	31.80' RT	7+31.54	33.64' LT	1,186,953.17	1,954,338.70	613.56
7	35+81.49	26.48' RT	7+26.14	44.36' LT	1,186,964.02	1,954,333.59	614.51
8	35+88.53	23.00' RT	7+22.61	51.37' LT	1,186,971.12	1,954,330.25	614.86 *
9	35+88.54	19.04' RT	7+18.64	51.35' LT	1,186,971.22	1,954,326.29	614.80 *
10	35+85.29	19.02' RT	7+18.65	48.10' LT	1,186,967.96	1,954,326.21	614.78
11	35+79.28	22.00' RT	7+21.68	42.11' LT	1,186,961.89	1,954,329.07	614.48
12	35+68.52	27.32' RT	7+27.08	31.39' LT	1,186,951.04	1,954,334.18	613.56
13	35+68.46	20.99' RT	7+20.75	31.29' LT	1,186,951.10	1,954,327.84	614.05
14	35+68.44	19.21' RT	7+18.97	31.26' LT	1,186,951.12	1,954,326.07	614.04
15	35+63.46	21.03' RT	7+20.83	26.29' LT	1,186,946.10	1,954,327.79	614.00
16	35+63.52	27.37' RT	7+27.16	26.39' LT	1,186,946.04	1,954,334.13	613.51

*MATCH EXISTING

SIDEWALK ELEVATIONS

POINT	18TH STREET		MADISON STREET		NORTHING	EASTING	ELEVATION	
	STATION	OFFSET	STATION	OFFSET				
75	35+11.14	20.35' RT	7+20.62	25.98' RT	1,186,893.85	1,954,326.16	612.18	
76	35+06.13	19.14' RT	7+19.47	31.00' RT	1,186,888.87	1,954,324.87	612.08	
77	35+06.14	20.38' RT	7+20.71	30.98' RT	1,186,888.85	1,954,326.11	612.09	
78	35+06.18	27.81' RT	7+28.14	30.86' RT	1,186,888.78	1,954,333.54	612.69	
79	35+06.22	32.81' RT	7+33.13	30.77' RT	1,186,888.73	1,954,338.54	612.76	
80	35+05.57	45.39' RT	7+45.72	31.28' RT	1,186,887.88	1,954,351.11	613.29	*
81	35+11.51	45.43' RT	7+45.70	25.34' RT	1,186,893.81	1,954,351.25	613.13	*
82	35+11.22	32.78' RT	7+33.05	25.77' RT	1,186,893.73	1,954,338.59	612.85	
83	35+18.36	32.73' RT	7+32.93	18.63' RT	1,186,900.87	1,954,338.67	612.64	
84	35+19.40	32.72' RT	7+32.91	17.59' RT	1,186,901.91	1,954,338.68	612.62	
85	35+18.32	27.73' RT	7+27.93	18.72' RT	1,186,900.92	1,954,333.67	612.57	
86	35+11.18	27.78' RT	7+28.05	25.86' RT	1,186,893.78	1,954,333.59	612.78	

*MATCH EXISTING

MODEL: Default
FILE NAME: F:\PROJECT FILES\MFT340 South 18th\CADD DRAWINGS\022 GDE Madison.dgn

CITY OF QUINCY UTILITIES & ENGINEERING

USER NAME = mtunis	DESIGNED -	REVISED -
	DRAWN -	REVISED -
PLOT SCALE = 10.0000 ft / in.	CHECKED -	REVISED -
PLOT DATE = 12/30/2024	DATE -	REVISED -

CITY OF QUINCY, ILLINOIS

GEOMETRIC DETAILS
18TH & MADISON

SCALE: NONE | SHEET 8 OF 11 SHEETS | STA. | TO STA.

F.A.U. RTE.	SECTION	COUNTY	TOTAL SHEETS	SHEET NO.
7824	21-00340-00-RS	ADAMS	34	23

CONTRACT NO. 93830

ILLINOIS | FED. AID PROJECT

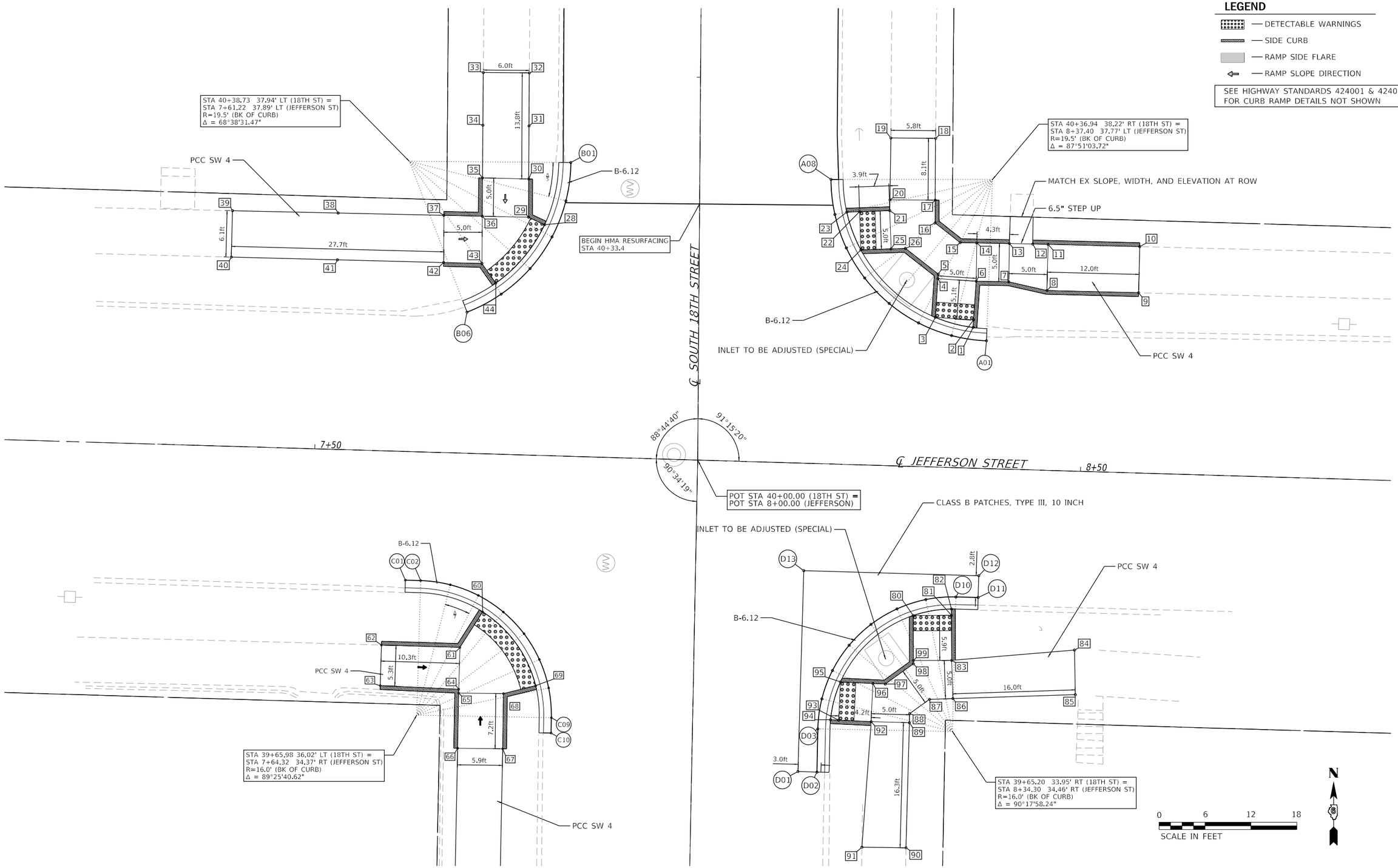

MODEL: Default
FILE NAME: F:\PROJECT FILES\MFT340 South 18th\CADD DRAWINGS\024 GDF Jefferson.dgn

CITY OF QUINCY UTILITIES & ENGINEERING	USER NAME = mtunis	DESIGNED -	REVISED -	CITY OF QUINCY, ILLINOIS	GEOMETRIC DETIALS 18TH & JEFFERSON	F.A.U. RTE.	SECTION	COUNTY / TOTAL SHEETS / SHEET NO.
		DRAWN -	REVISED -			7824	21-00340-00-RS	ADAMS / 34 / 24
	PLOT SCALE = 12.0000 ft / in.	CHECKED -	REVISED -					CONTRACT NO. 93830
	PLOT DATE = 12/30/2024	DATE -	REVISED -		SCALE: 1" = 12' SHEET 9 OF 11 SHEETS STA. TO STA.			ILLINOIS FED. AID PROJECT

EDGE OF PAVEMENT ELEVATIONS

POINT	18TH STREET		JEFFERSON STREET		NORTHING	EASTING	ELEVATION	
	STATION	OFFSET	STATION	OFFSET				
B01	40+38.73	16.85' LT	7+82.30	38.35' LT	1,187,421.82	1,954,298.70	619.52	*
B02	40+33.73	17.46' LT	7+81.81	33.33' LT	1,187,416.82	1,954,298.06	619.66	*
B03	40+29.01	19.23' LT	7+80.14	28.58' LT	1,187,412.12	1,954,296.25	619.85	*
B04	40+24.85	22.07' LT	7+77.39	24.36' LT	1,187,407.98	1,954,293.38	619.91	*
B05	40+21.48	25.82' LT	7+73.72	20.91' LT	1,187,404.64	1,954,289.60	619.85	*
B06	40+19.09	30.26' LT	7+69.33	18.43' LT	1,187,402.29	1,954,285.15	619.77	*

*MATCH EXISTING

SIDEWALK ELEVATIONS

POINT	18TH STREET		JEFFERSON STREET		NORTHING	EASTING	ELEVATION	
	STATION	OFFSET	STATION	OFFSET				
28	40+30.58	20.22' LT	7+79.11	30.13' LT	1,187,413.70	1,954,295.27	619.84	
29	40+31.54	22.31' LT	7+77.00	31.05' LT	1,187,414.68	1,954,293.18	619.93	
30	40+36.55	22.33' LT	7+76.88	36.05' LT	1,187,419.68	1,954,293.21	620.31	
31	40+43.47	22.34' LT	7+76.71	42.97' LT	1,187,426.60	1,954,293.24	620.00	
32	40+50.39	22.36' LT	7+76.54	49.89' LT	1,187,433.53	1,954,293.28	619.68	*
33	40+50.40	28.36' LT	7+70.54	49.76' LT	1,187,433.57	1,954,287.28	619.78	*
34	40+43.51	28.37' LT	7+70.69	42.88' LT	1,187,426.69	1,954,287.22	620.09	
35	40+36.63	28.37' LT	7+70.84	36.00' LT	1,187,419.81	1,954,287.17	620.40	
36	40+31.63	28.37' LT	7+70.94	31.00' LT	1,187,414.81	1,954,287.13	620.00	
37	40+31.70	33.37' LT	7+65.94	30.97' LT	1,187,414.92	1,954,282.13	620.40	
38	40+31.90	47.17' LT	7+52.14	30.86' LT	1,187,415.22	1,954,268.33	620.27	
39	40+32.10	60.98' LT	7+38.33	30.76' LT	1,187,415.53	1,954,254.52	620.13	*
40	40+26.05	61.09' LT	7+38.36	24.70' LT	1,187,409.47	1,954,254.37	620.02	*
41	40+25.80	47.22' LT	7+52.22	24.76' LT	1,187,409.12	1,954,268.23	620.17	
42	40+25.55	33.36' LT	7+66.09	24.81' LT	1,187,408.76	1,954,282.09	620.31	
43	40+25.46	28.36' LT	7+71.09	24.83' LT	1,187,408.64	1,954,287.09	619.93	
44	40+22.91	26.53' LT	7+72.97	22.32' LT	1,187,406.08	1,954,288.90	619.84	

*MATCH EXISTING

EDGE OF PAVEMENT ELEVATIONS

POINT	18TH STREET		JEFFERSON STREET		NORTHING	EASTING	ELEVATION	
	STATION	OFFSET	STATION	OFFSET				
C01	39+83.62	37.86' LT	7+62.32	16.79' RT	1,187,367.29	1,954,277.10	619.65	*
C02	39+83.60	35.86' LT	7+64.32	16.79' RT	1,187,367.23	1,954,279.10	619.76	*
C03	39+83.12	31.98' LT	7+68.21	17.23' RT	1,187,366.68	1,954,282.97	619.90	*
C04	39+81.79	28.30' LT	7+71.90	18.51' RT	1,187,365.29	1,954,286.63	619.94	*
C05	39+79.69	25.00' LT	7+75.22	20.58' RT	1,187,363.12	1,954,289.88	619.96	*
C06	39+76.91	22.25' LT	7+78.00	23.33' RT	1,187,360.29	1,954,292.58	620.01	*
C07	39+73.58	20.19' LT	7+80.10	26.63' RT	1,187,356.93	1,954,294.59	620.08	*
C08	39+69.89	18.90' LT	7+81.43	30.31' RT	1,187,353.21	1,954,295.80	620.17	*
C09	39+66.00	18.47' LT	7+81.90	34.20' RT	1,187,349.32	1,954,296.16	620.21	*
C10	39+64.00	18.47' LT	7+81.92	36.20' RT	1,187,347.32	1,954,296.12	620.22	*

*MATCH EXISTING

SIDEWALK ELEVATIONS

POINT	18TH STREET		JEFFERSON STREET		NORTHING	EASTING	ELEVATION	
	STATION	OFFSET	STATION	OFFSET				
60	39+79.64	27.68' LT	7+72.52	20.64' RT	1,187,363.15	1,954,287.18	619.94	
61	39+74.94	30.56' LT	7+69.70	25.37' RT	1,187,358.50	1,954,284.22	620.02	
62	39+75.04	40.81' LT	7+59.45	25.36' RT	1,187,358.81	1,954,273.98	620.40	*
63	39+69.74	40.86' LT	7+59.44	30.66' RT	1,187,353.51	1,954,273.82	620.50	*
64	39+69.47	30.61' LT	7+69.70	30.83' RT	1,187,353.04	1,954,284.07	620.10	
65	39+68.97	30.62' LT	7+69.69	31.33' RT	1,187,352.54	1,954,284.04	620.10	
66	39+61.77	30.60' LT	7+69.78	38.53' RT	1,187,345.34	1,954,283.92	620.70	*
67	39+61.81	24.71' LT	7+75.67	38.43' RT	1,187,345.27	1,954,289.81	620.59	*
68	39+69.01	24.76' LT	7+75.55	31.23' RT	1,187,352.47	1,954,289.90	620.16	
69	39+70.14	20.57' LT	7+79.73	30.07' RT	1,187,353.51	1,954,294.11	620.16	

*MATCH EXISTING

EDGE OF PAVEMENT ELEVATIONS

POINT	18TH STREET		JEFFERSON STREET		NORTHING	EASTING	ELEVATION	
	STATION	OFFSET	STATION	OFFSET				
A01	40+15.86	37.59' RT	8+37.23	16.68' LT	1,187,398.55	1,954,352.96	620.20	*
A02	40+16.50	33.02' RT	8+32.65	17.22' LT	1,187,399.22	1,954,348.41	620.11	*
A03	40+18.12	28.71' RT	8+28.30	18.75' LT	1,187,400.87	1,954,344.10	620.01	*
A04	40+20.64	24.85' RT	8+24.39	21.18' LT	1,187,403.42	1,954,340.26	619.92	
A05	40+23.93	21.62' RT	8+21.09	24.40' LT	1,187,406.74	1,954,337.06	620.06	
A06	40+27.85	19.19' RT	8+18.58	28.26' LT	1,187,410.67	1,954,334.66	619.99	
A07	40+32.20	17.67' RT	8+16.97	32.58' LT	1,187,415.03	1,954,333.18	619.85	*
A08	40+36.78	17.14' RT	8+16.33	37.15' LT	1,187,419.61	1,954,332.67	619.71	*

*MATCH EXISTING

SIDEWALK ELEVATIONS

POINT	18TH STREET		JEFFERSON STREET		NORTHING	EASTING	ELEVATION	
	STATION	OFFSET	STATION	OFFSET				
1	40+17.59	35.82' RT	8+35.43	18.37' LT	1,187,400.28	1,954,351.21	620.14	
2	40+18.57	35.88' RT	8+35.46	19.35' LT	1,187,401.27	1,954,351.28	620.15	
3	40+18.87	30.89' RT	8+30.47	19.54' LT	1,187,401.60	1,954,346.29	620.05	
4	40+23.93	31.19' RT	8+30.66	24.60' LT	1,187,406.66	1,954,346.63	620.24	
5	40+24.52	31.22' RT	8+30.68	25.20' LT	1,187,407.25	1,954,346.67	620.25	
6	40+23.63	36.18' RT	8+35.65	24.42' LT	1,187,406.32	1,954,351.61	620.30	
7	40+23.58	40.43' RT	8+39.90	24.46' LT	1,187,406.24	1,954,355.87	620.60	
8	40+22.49	45.43' RT	8+44.93	23.48' LT	1,187,405.11	1,954,360.86	620.66	
9	40+22.28	57.39' RT	8+56.89	23.54' LT	1,187,404.82	1,954,372.82	621.30	*
10	40+28.30	57.50' RT	8+56.87	29.56' LT	1,187,410.84	1,954,372.97	621.42	*
11	40+28.51	45.53' RT	8+44.90	29.50' LT	1,187,411.13	1,954,361.01	620.74	
12	40+28.55	43.53' RT	8+42.90	29.49' LT	1,187,411.18	1,954,359.01	620.72	
13	40+28.58	40.48' RT	8+39.85	29.46' LT	1,187,411.24	1,954,355.96	620.67	
14	40+28.63	36.23' RT	8+35.60	29.42' LT	1,187,411.32	1,954,351.71	620.33	
15	40+28.65	34.06' RT	8+33.42	29.39' LT	1,187,411.36	1,954,349.53	620.30	
16	40+31.19	30.77' RT	8+30.08	31.86' LT	1,187,413.93	1,954,346.26	620.24	
17	40+34.18	30.76' RT	8+30.00	34.84' LT	1,187,416.91	1,954,346.27	620.25	
18	40+42.24	30.76' RT	8+29.82	42.91' LT	1,187,424.98	1,954,346.33	620.51	*
19	40+42.24	24.91' RT	8+23.98	42.78' LT	1,187,425.02	1,954,340.49	620.40	*
20	40+34.16	24.85' RT	8+24.09	34.69' LT	1,187,416.94	1,954,340.36	620.21	
21	40+32.76	24.84' RT	8+24.11	33.30' LT	1,187,415.54	1,954,340.34	620.19	
22	40+32.60	20.89' RT	8+20.17	33.05' LT	1,187,415.41	1,954,336.40	619.88	
23	40+32.53	19.22' RT	8+18.51	32.94' LT	1,187,415.35	1,954,334.73	619.86	
24	40+27.60	21.10' RT	8+20.49	28.06' LT	1,187,410.41	1,954,336.56	619.89	
25	40+27.77	25.04' RT	8+24.43	28.31' LT	1,187,410.54	1,954,340.51	620.20	
26	40+27.84	26.93' RT	8+26.31	28.43' LT	1,187,410.60	1,954,342.40	620.21	

*MATCH EXISTING

EDGE OF PAVEMENT ELEVATIONS

POINT	18TH STREET		JEFFERSON STREET		NORTHING	EASTING	ELEVATION	
	STATION	OFFSET	STATION	OFFSET				
D01	39+59.59	13.88' RT	8+14.29	40.27' RT	1,187,342.30	1,954,328.35	620.15	*
D02	39+59.57	16.37' RT	8+16.77	40.27' RT	1,187,342.22	1,954,330.83	620.10	*
D03	39+65.22	16.37' RT	8+16.72	34.62' RT	1,187,347.87	1,954,330.95	620.08	
D04	39+69.14	16.82' RT	8+17.12	30.69' RT	1,187,351.79	1,954,331.47	620.04	
D05	39+72.87	18.13' RT	8+18.40	26.95' RT	1,187,355.49	1,954,332.85	619.96	
D06	39+76.21	20.24' RT	8+20.47	23.59' RT	1,187,358.78	1,954,335.03	619.80	
D07	39+78.99	23.04' RT	8+23.25	20.78' RT	1,187,361.51	1,954,337.89	619.75	
D08	39+81.08	26.39' RT	8+26.58	18.66' RT	1,187,363.54	1,954,341.23	619.95	
D09	39+82.37	30.13' RT	8+30.30	17.33' RT	1,187,364.75	1,954,345.04	620.00	
D10	39+82.79	34.06' RT	8+34.23	16.87' RT	1,187,365.09	1,954,348.93	620.04	
D11	39+82.77	36.96' RT	8+37.13	16.86' RT	1,187,365.02	1,954,351.87	620.11	*
D12	39+85.62	36.98' RT	8+37.13	14.01' RT	1,187,367.87	1,954,351.95	620.08	*
D13	39+85.83	14.13' RT	8+14.27	14.03' RT	1,187,368.53	1,954,329.11	620.05	*

*MATCH EXISTING

SIDEWALK ELEVATIONS

POINT	18TH STREET		JEFFERSON STREET		NORTHING	EASTING	ELEVATION	
	STATION	OFFSET	STATION	OFFSET				
80	39+80.26	28.53' RT	8+28.72	19.46' RT	1,187,362.67	1,954,343.40	619.99	
81	39+80.37	33.53' RT	8+33.72	19.29' RT	1,187,362.69	1,954,348.40	620.06	
82	39+81.20	33.51' RT	8+33.69	18.47' RT	1,187,363.51	1,954,348.39	620.05	
83	39+74.50	33.66' RT	8+33.91	25.16' RT	1,187,356.81	1,954,348.42	620.47	
84	39+76.16	49.67' RT	8+49.90	23.35' RT	1,187,358.16	1,954,364.45	620.88	*
85	39+70.33	49.89' RT	8+50.19	29.17' RT	1,187,352.33	1,954,364.56	620.99	*
86	39+69.50	33.92' RT	8+34.22	30.16' RT	1,187,351.82	1,954,348.58	620.51	
87	39+69.35	30.87' RT	8+31.17	30.34' RT	1,187,351.72	1,954,345.52	620.46	
88	39+67.43	28.31' RT	8+28.63	32.28' RT	1,187,349.85	1,954,342.93	620.43	
89	39+66.25	28.30' RT	8+28.64	33.47' RT	1,187,348.67	1,954,342.90	620.45	
90	39+49.91	28.17' RT	8+28.67	49.81' RT	1,187,332.33	1,954,342.45	621.09	*
91	39+49.88	22.43' RT	8+22.92	49.90' RT	1,187,332.42	1,954,336.70	620.95	*
92	39+66.29	23.30' RT	8+23.64	33.48' RT	1,187,348.81	1,954,337.90	620.41	
93	39+66.40	19.06' RT	8+19.40	33.41' RT	1,187,349.00	1,954,333.67	620.08	
94	39+66.43	18.00' RT	8+18.33	33.39' RT	1,187,349.05	1,954,332.60	620.07	
95	39+71.40	19.20' RT	8+19.49	28.41' RT	1,187,354.00	1,954,333.90	620.00	
96	39+71.28	23.44' RT	8+23.73	28.48' RT	1,187,353.80	1,954,338.14	620.33	
97	39+71.24	25.05' RT	8+25.34	28.51' RT	1,187,353.72	1,954,339.75	620.35	
98	39+73.95	28.67' RT	8+28.93	25.76' RT	1,187,356.36	1,954,343.42	620.40	
99	39+74.38	28.66' RT	8+28.92	25.33' RT	1,187,356.79	1,954,343.42	620.40	

*MATCH EXISTING

EDGE OF PAVEMENT ELEVATIONS

POINT	NORTH 18TH ST		WASHINGTON ST		NORTHING	EASTING	ELEVATION	
	STATION	OFFSET	STATION	OFFSET				
B01	45+62.79	16.90' LT	9+31.97	16.94' LT	1,187,945.87	1,954,302.62	607.05	*
B02	45+61.79	16.90' LT	9+28.81	16.92' LT	1,187,944.87	1,954,302.61	607.00	*
B03	45+58.94	17.22' LT	9+26.04	17.22' LT	1,187,942.03	1,954,302.26	606.93	*
B04	45+56.24	18.19' LT	9+23.40	18.11' LT	1,187,939.34	1,954,301.27	606.86	*
B05	45+53.83	19.74' LT	9+21.03	19.57' LT	1,187,936.94	1,954,299.70	606.81	*
B06	45+51.83	21.80' LT	9+19.03	21.51' LT	1,187,934.96	1,954,297.63	606.76	*
B07	45+50.35	24.25' LT	9+17.51	23.84' LT	1,187,933.50	1,954,295.16	606.70	*
B08	45+49.46	26.98' LT	9+16.54	26.45' LT	1,187,932.63	1,954,292.43	606.65	*
B09	45+49.22	29.84' LT	9+16.17	29.21' LT	1,187,932.41	1,954,289.57	606.50	*
B10	45+49.33	33.79' LT	9+16.15	30.13' LT	1,187,932.55	1,954,285.62	606.39	*

*MATCH EXISTING

SIDEWALK ELEVATIONS

POINT	NORTH 18TH ST		WASHINGTON ST		NORTHING	EASTING	ELEVATION	
	STATION	OFFSET	STATION	OFFSET				
21	45+56.98	19.59' LT	8+79.77	24.96' LT	1,187,940.09	1,954,299.88	606.87	
22	45+57.85	21.39' LT	8+77.95	25.80' LT	1,187,940.98	1,954,298.09	606.88	
23	45+63.85	21.39' LT	8+77.80	31.79' LT	1,187,946.98	1,954,298.14	607.24	
24	45+74.84	21.39' LT	8+77.52	42.77' LT	1,187,957.96	1,954,298.22	607.64	
25	45+85.82	21.39' LT	8+77.24	53.76' LT	1,187,968.94	1,954,298.31	608.03	*
26	45+85.97	26.79' LT	8+71.85	53.77' LT	1,187,969.14	1,954,292.92	608.12	*
27	45+74.91	26.79' LT	8+72.13	42.71' LT	1,187,958.08	1,954,292.83	607.64	
28	45+63.85	26.78' LT	8+72.41	31.66' LT	1,187,947.02	1,954,292.74	607.16	
29	45+57.85	26.78' LT	8+72.56	25.66' LT	1,187,941.02	1,954,292.69	606.80	
30	45+51.13	26.78' LT	8+72.73	18.94' LT	1,187,934.30	1,954,292.64	606.67	

*MATCH EXISTING

LEGEND

- DETECTABLE WARNINGS
- SIDE CURB
- RAMP SIDE FLARE
- RAMP SLOPE DIRECTION

SEE HIGHWAY STANDARDS 424001 & 424006 FOR CURB RAMP DETAILS NOT SHOWN

EDGE OF PAVEMENT ELEVATIONS

POINT	NORTH 18TH ST		WASHINGTON ST		NORTHING	EASTING	ELEVATION	
	STATION	OFFSET	STATION	OFFSET				
A01	45+47.63	32.38' RT	9+31.97	16.94' LT	1,187,930.32	1,954,351.77	606.35	*
A02	45+47.70	29.22' RT	9+28.81	16.92' LT	1,187,930.41	1,954,348.62	606.50	*
A03	45+48.06	26.46' RT	9+26.04	17.22' LT	1,187,930.80	1,954,345.86	606.87	*
A04	45+49.03	23.85' RT	9+23.40	18.11' LT	1,187,931.78	1,954,343.25	606.92	*
A05	45+50.54	21.51' RT	9+21.03	19.57' LT	1,187,933.32	1,954,340.93	606.96	*
A06	45+52.53	19.57' RT	9+19.03	21.51' LT	1,187,935.32	1,954,339.00	607.01	*
A07	45+54.90	18.11' RT	9+17.51	23.84' LT	1,187,937.71	1,954,337.56	607.05	*
A08	45+57.54	17.20' RT	9+16.54	26.45' LT	1,187,940.35	1,954,336.68	607.13	*
A09	45+60.30	16.90' RT	9+16.17	29.21' LT	1,187,943.12	1,954,336.40	607.21	*
A10	45+61.23	16.90' RT	9+16.15	30.13' LT	1,187,944.04	1,954,336.40	607.22	*

*MATCH EXISTING

SIDEWALK ELEVATIONS

POINT	NORTH 18TH ST		WASHINGTON ST		NORTHING	EASTING	ELEVATION	
	STATION	OFFSET	STATION	OFFSET				
1	45+49.61	26.80' RT	9+26.34	18.77' LT	1,187,932.34	1,954,346.21	606.90	
2	45+53.16	27.91' RT	9+27.35	22.35' LT	1,187,935.88	1,954,347.34	606.97	
3	45+53.04	34.76' RT	9+34.20	22.40' LT	1,187,935.71	1,954,354.19	607.17	*
4	45+58.04	34.84' RT	9+34.16	27.40' LT	1,187,940.71	1,954,354.32	607.26	*
5	45+58.16	27.99' RT	9+27.31	27.35' LT	1,187,940.88	1,954,347.47	607.05	
6	45+58.20	25.44' RT	9+24.76	27.32' LT	1,187,940.94	1,954,344.92	607.07	
7	45+54.91	19.88' RT	9+19.29	23.89' LT	1,187,937.70	1,954,339.33	607.06	

*MATCH EXISTING

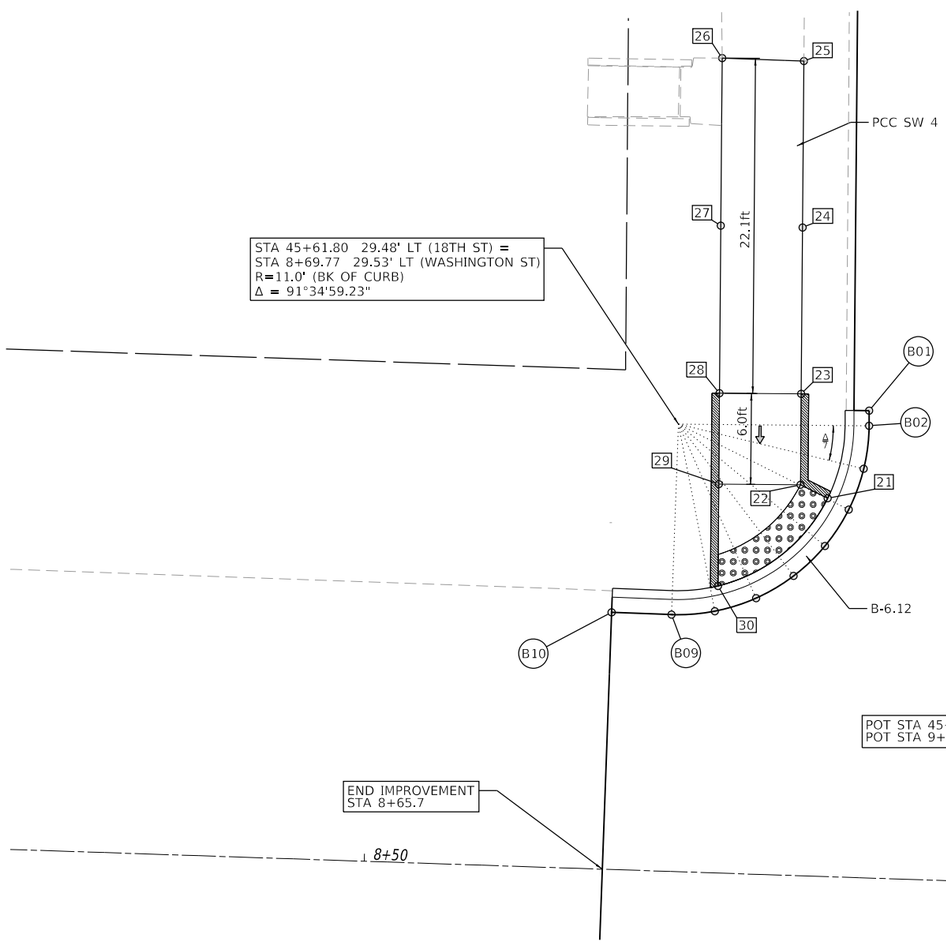

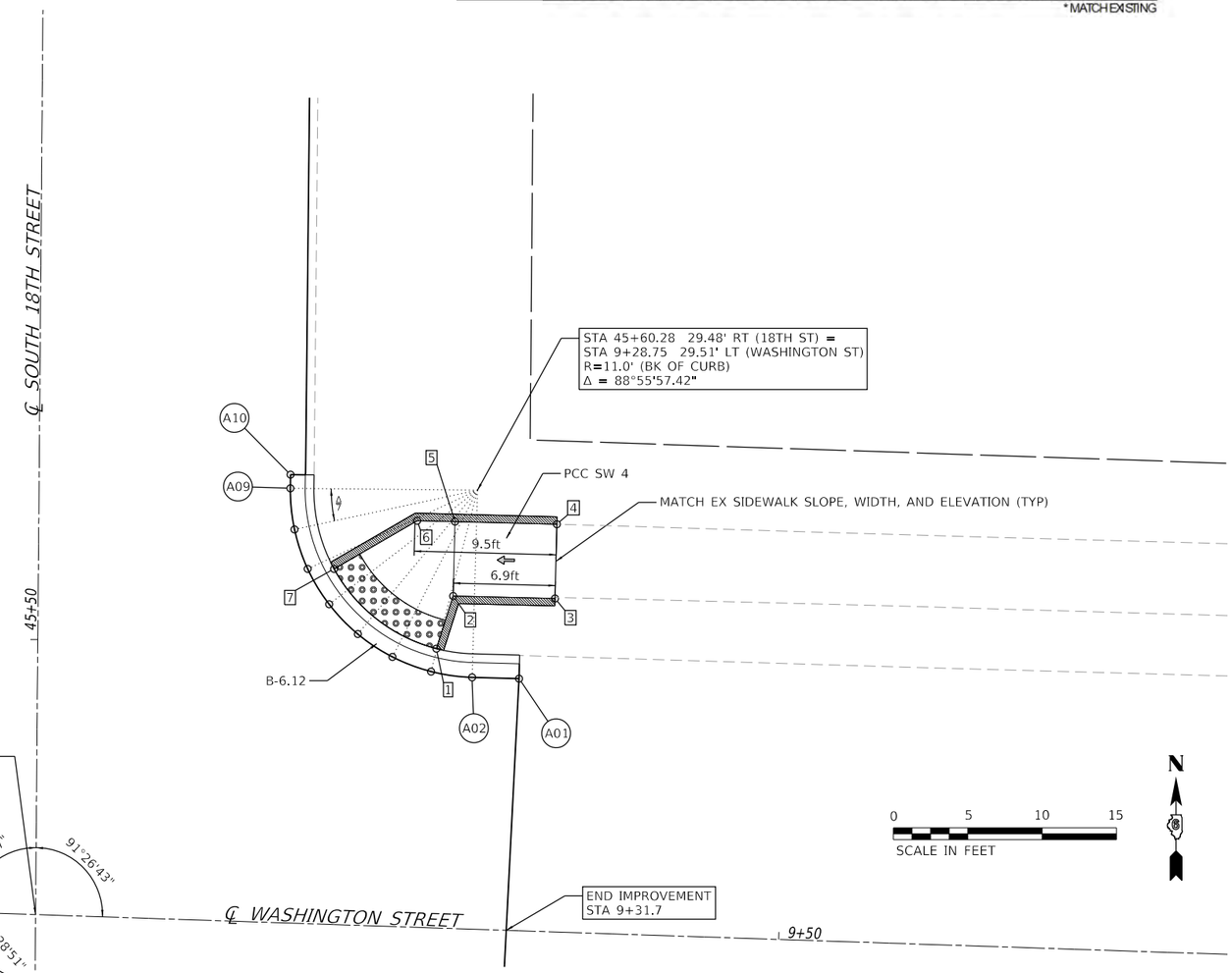

MODEL: Default
FILE NAME: F:\PROJECT FILES\MFT340_South_18th\CADD_DRAWINGS\026 GDG Washington.dgn

CITY OF QUINCY UTILITIES & ENGINEERING	USER NAME = mtunis	DESIGNED -	REVISED -	CITY OF QUINCY, ILLINOIS	GEOMETRIC DETAILS 18TH & WASHINGTON	F.A.U. RTE.	SECTION	COUNTY	TOTAL SHEETS	SHEET NO.
		DRAWN -	REVISED -			7824	21-00340-00-RS	ADAMS	34	26
	PLOT SCALE = 10.0000 ft / in.	CHECKED -	REVISED -					CONTRACT NO. 93830		
	PLOT DATE = 12/30/2024	DATE -	REVISED -		SCALE: 1" = 10' SHEET 11 OF 11 SHEETS STA. TO STA.		ILLINOIS	FED. AID PROJECT		

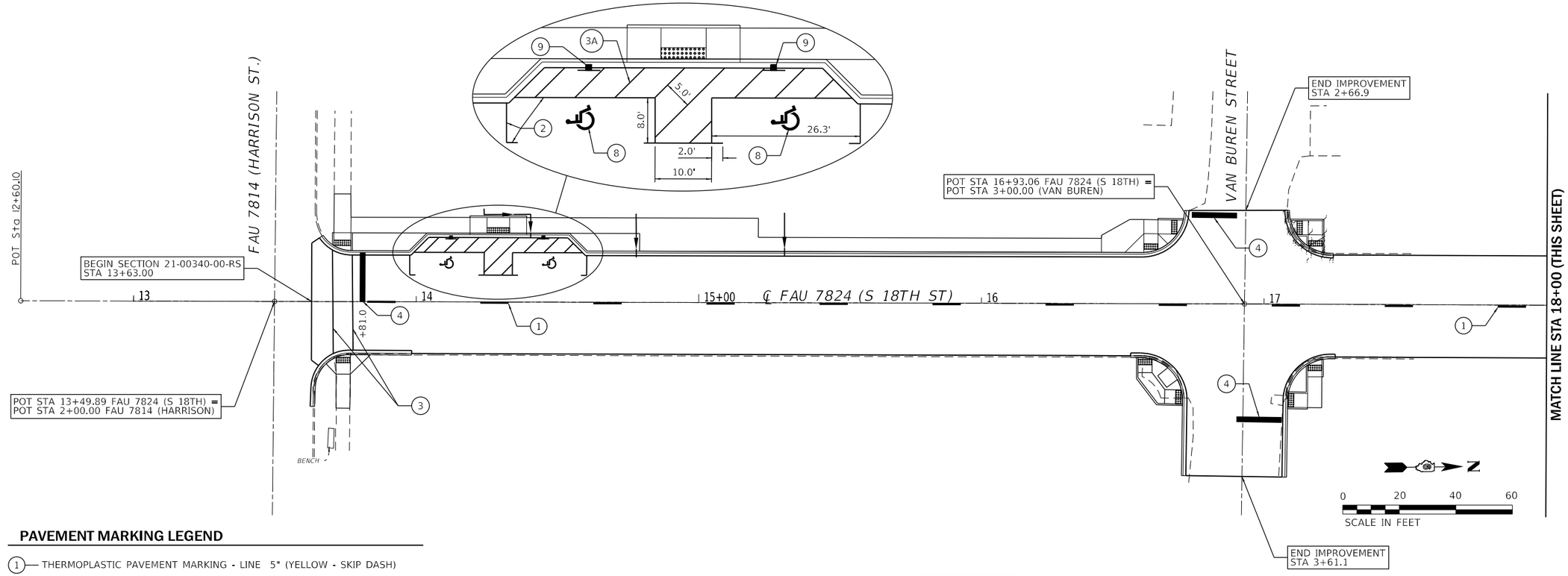

PAVEMENT MARKING LEGEND

1. THERMOPLASTIC PAVEMENT MARKING - LINE 5" (YELLOW - SKIP DASH)
2. THERMOPLASTIC PAVEMENT MARKING - LINE 5" (YELLOW)
3. THERMOPLASTIC PAVEMENT MARKING - LINE 6" (WHITE)
3A. THERMOPLASTIC PAVEMENT MARKING - LINE 6" (YELLOW)
4. THERMOPLASTIC PAVEMENT MARKING - LINE 24" (WHITE)
5. PAINT PAVEMENT MARKING - LINE 5" (YELLOW)
6. PAINT PAVEMENT MARKING - LINE 6" (WHITE)
7. PAINT PAVEMENT MARKING - LINE 24" (WHITE)
8. THERMOPLASTIC PAVEMENT MARKING - LETTERS & SYMBOLS (WHITE)
9. ACCESSIBLE PARKING SIGN (SEE SHEET 32)

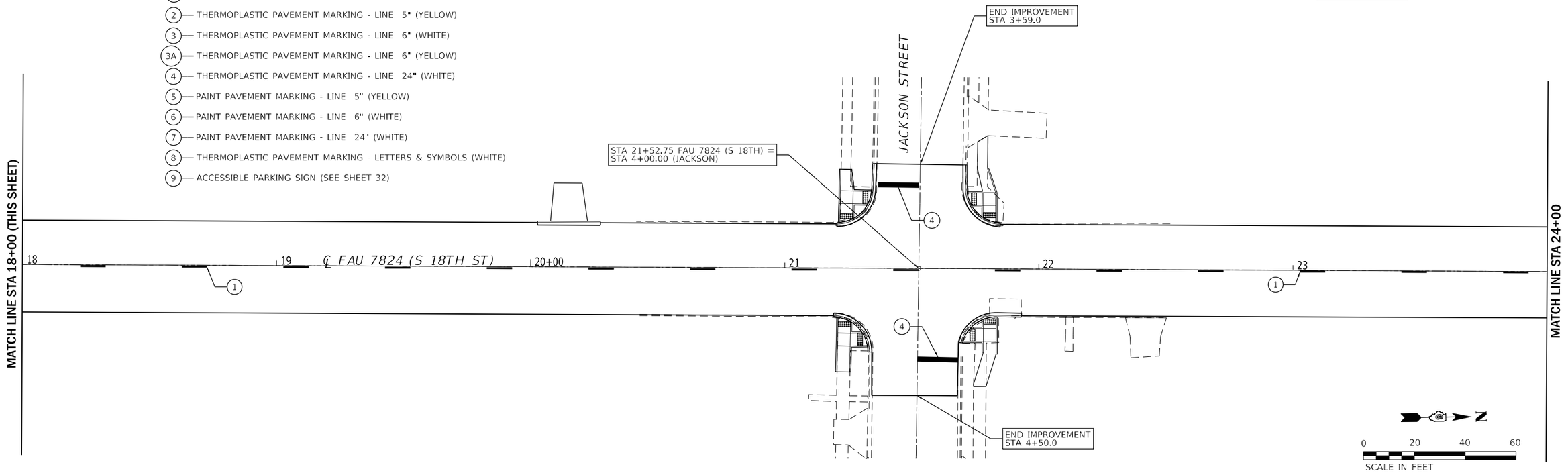

MODEL: Default
FILE NAME: F:\PROJECT FILES\MFT340 South 18th\CADD DRAWINGS\027 PM01 MFT340.dgn

CITY OF QUINCY UTILITIES & ENGINEERING	USER NAME = mtunis	DESIGNED -	REVISED -	CITY OF QUINCY, ILLINOIS	PAVEMENT MARKING PLAN	F.A.U. RTE.	SECTION	COUNTY	TOTAL SHEETS / SHEET NO.
		DRAWN -	REVISED -			7824	21-00340-00-RS	ADAMS	34 / 27
	PLOT SCALE = 40.0000 ' / in.	CHECKED -	REVISED -					CONTRACT NO. 93830	
	PLOT DATE = 1/3/2025	DATE -	REVISED -		SCALE: 1" = 40' SHEET 1 OF 4 SHEETS STA. 13+63.0 TO STA. 24+00.0			ILLINOIS FED. AID PROJECT	

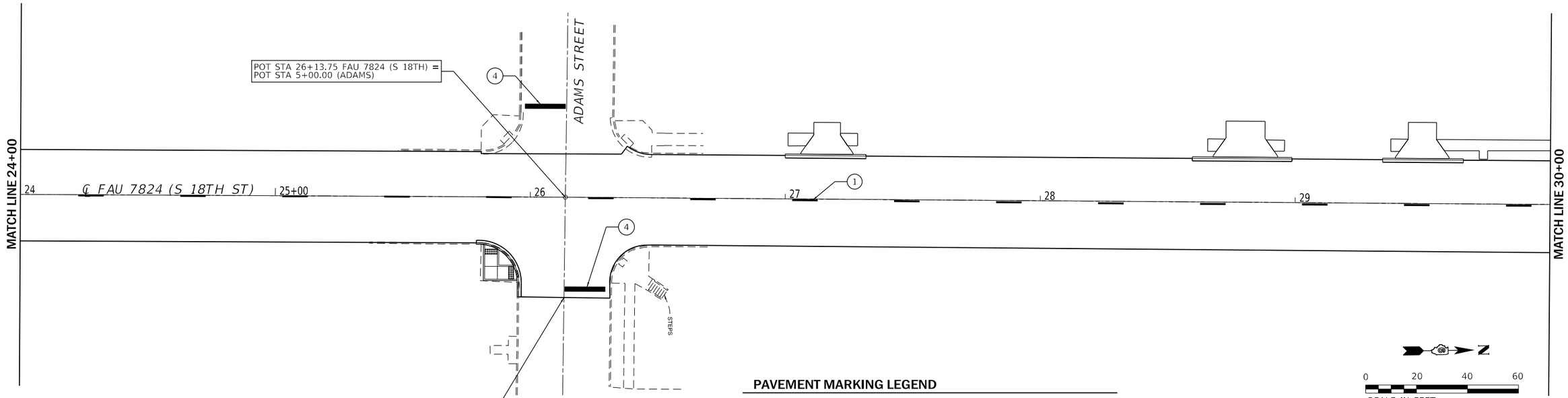

PAVEMENT MARKING LEGEND

1. THERMOPLASTIC PAVEMENT MARKING - LINE 5" (YELLOW - SKIP DASH)
2. THERMOPLASTIC PAVEMENT MARKING - LINE 5" (YELLOW)
3. THERMOPLASTIC PAVEMENT MARKING - LINE 6" (WHITE)
4. THERMOPLASTIC PAVEMENT MARKING - LINE 24" (WHITE)
5. PAINT PAVEMENT MARKING - LINE 5" (YELLOW)
6. PAINT PAVEMENT MARKING - LINE 6" (WHITE)
7. PAINT PAVEMENT MARKING - LINE 24" (WHITE)

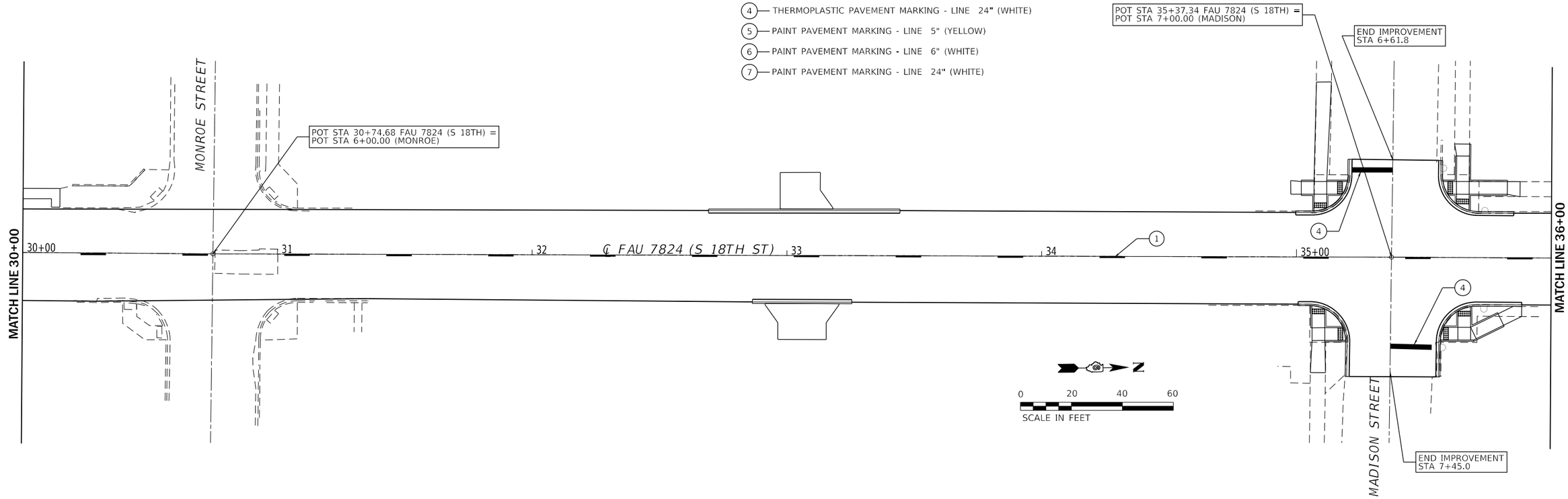

MODEL: Default
FILE NAME: F:\PROJECT FILES\MFT340 South 18th\CADD DRAWINGS\1028 PN02 MFT340.dgn

CITY OF QUINCY UTILITIES & ENGINEERING	USER NAME = mtunis	DESIGNED -	REVISED -	CITY OF QUINCY, ILLINOIS	PAVEMENT MARKING PLAN	F.A.U. RTE.	SECTION	COUNTY	TOTAL SHEETS / SHEET NO.
		DRAWN -	REVISED -			7824	21-00340-00-RS	ADAMS	34 / 28
	PLOT SCALE = 40.0000 ' / in.	CHECKED -	REVISED -					CONTRACT NO. 93830	
	PLOT DATE = 12/30/2024	DATE -	REVISED -		SCALE: 1" = 40' SHEET 2 OF 4 SHEETS STA. 24+00.0 TO STA. 36+00.0		ILLINOIS	FED. AID PROJECT	

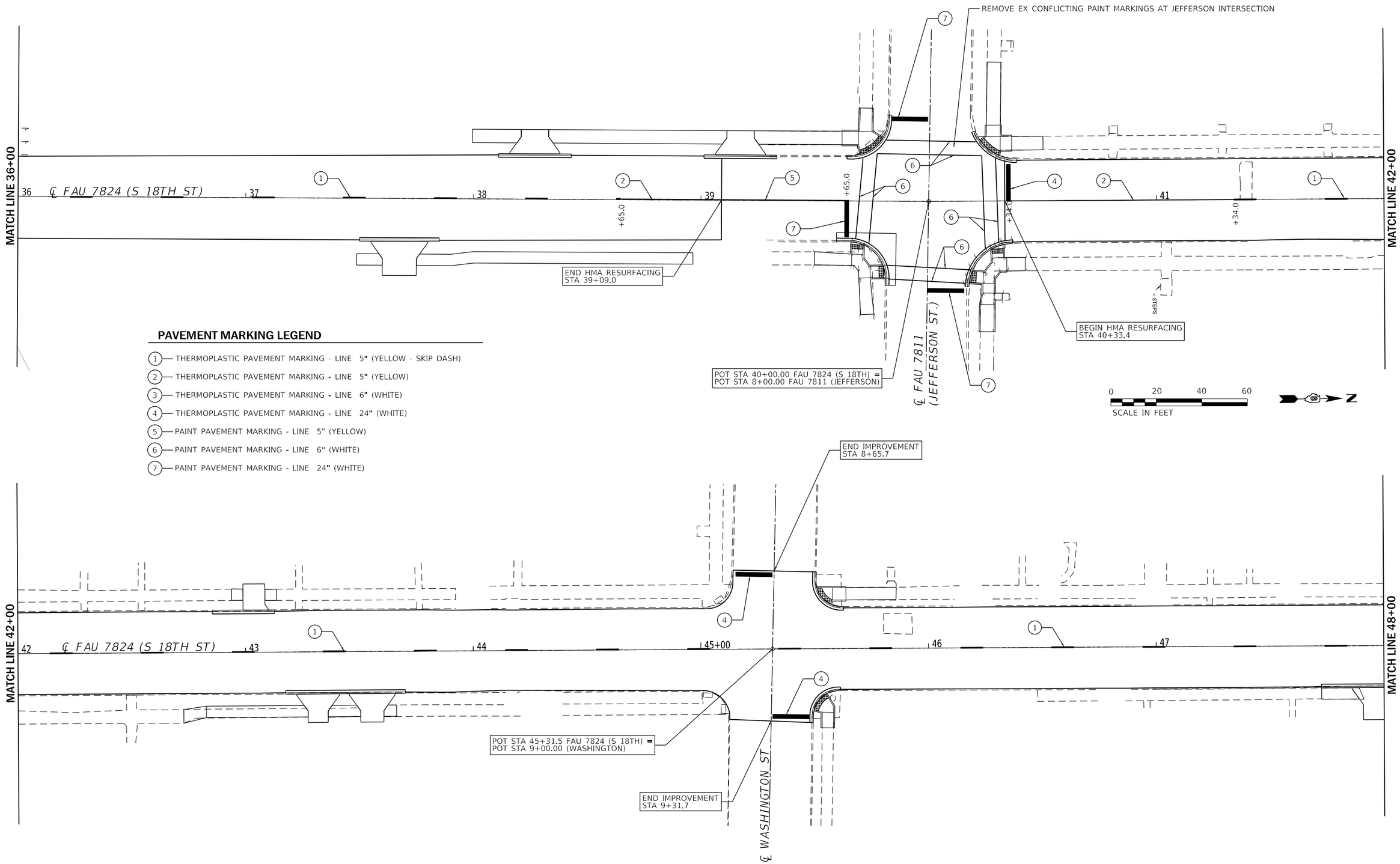

PAVEMENT MARKING LEGEND

1. THERMOPLASTIC PAVEMENT MARKING - LINE 5" (YELLOW - SKIP DASH)
2. THERMOPLASTIC PAVEMENT MARKING - LINE 5" (YELLOW)
3. THERMOPLASTIC PAVEMENT MARKING - LINE 6" (WHITE)
4. THERMOPLASTIC PAVEMENT MARKING - LINE 24" (WHITE)
5. PAINT PAVEMENT MARKING - LINE 5" (YELLOW)
6. PAINT PAVEMENT MARKING - LINE 6" (WHITE)
7. PAINT PAVEMENT MARKING - LINE 24" (WHITE)

MODEL: Default
FILE NAME: F:\PROJECT FILES\MFT340_South 18th\CADD_DRAWINGS\029 PM03 MFT340.dgn

CITY OF QUINCY UTILITIES & ENGINEERING	USER NAME = mtunis	DESIGNED -	REVISED -	CITY OF QUINCY, ILLINOIS	PAVEMENT MARKING PLAN			F.A.U. RTE.	SECTION	COUNTY	TOTAL SHEETS	SHEET NO.
		DRAWN -	REVISED -					7824	21-00340-00-RS	ADAMS	34	29
	PLOT SCALE = 40.0000 ' / in.	CHECKED -	REVISED -							CONTRACT NO. 93830		
	PLOT DATE = 1/3/2025	DATE -	REVISED -		SCALE: 1" = 40'	SHEET 3 OF 4 SHEETS	STA. 36+00.0 TO STA. 48+00.0		ILLINOIS	FED. AID PROJECT		

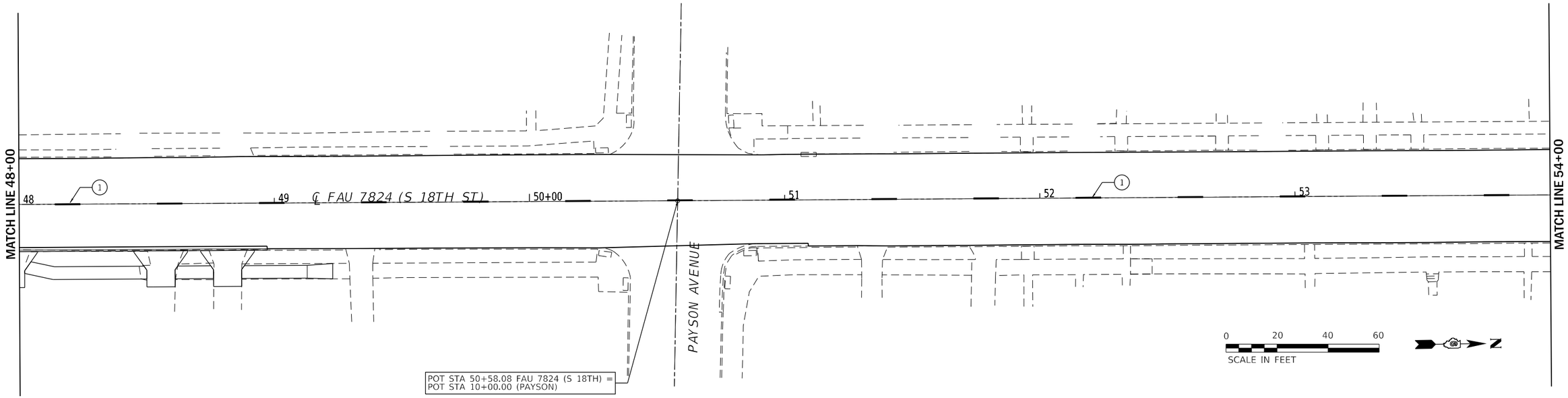

PAVEMENT MARKING LEGEND

1. THERMOPLASTIC PAVEMENT MARKING - LINE 5" (YELLOW - SKIP DASH)
2. THERMOPLASTIC PAVEMENT MARKING - LINE 5" (YELLOW)
3. THERMOPLASTIC PAVEMENT MARKING - LINE 6" (WHITE)
4. THERMOPLASTIC PAVEMENT MARKING - LINE 24" (WHITE)
5. PAINT PAVEMENT MARKING - LINE 5" (YELLOW)
6. PAINT PAVEMENT MARKING - LINE 6" (WHITE)
7. PAINT PAVEMENT MARKING - LINE 24" (WHITE)

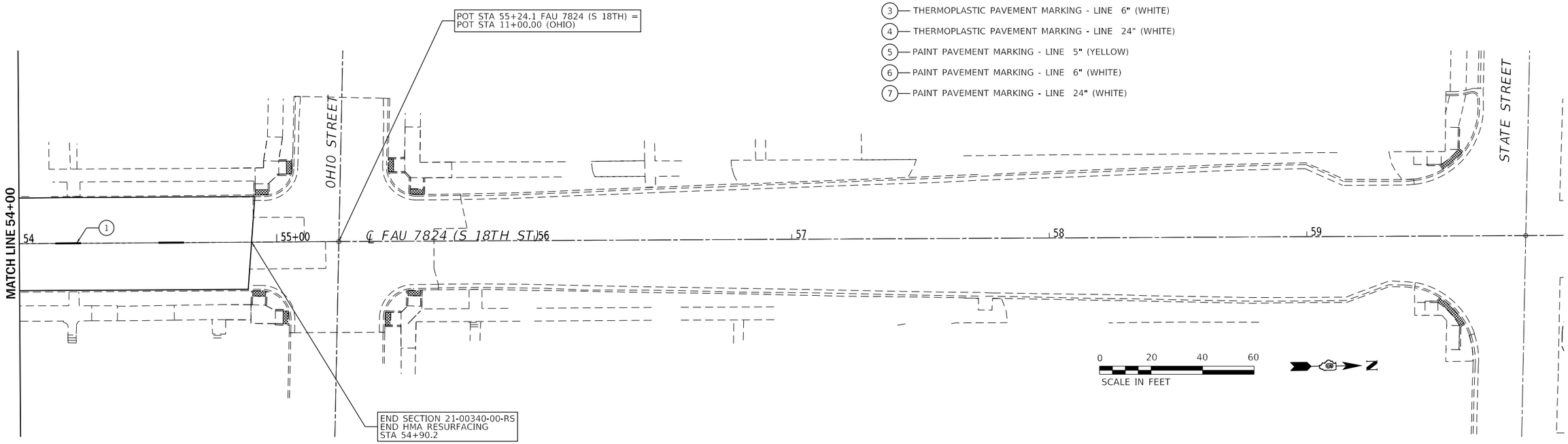

MODEL: Default
FILE NAME: F:\PROJECT FILES\MFT340 South 18th\CADD_DRAWINGS\I030 PN04 MFT340.dgn

CITY OF QUINCY UTILITIES & ENGINEERING	USER NAME = mtunis	DESIGNED -	REVISED -	CITY OF QUINCY, ILLINOIS	PAVEMENT MARKING PLAN	F.A.U. RTE.	SECTION	COUNTY	TOTAL SHEETS / SHEET NO.
		DRAWN -	REVISED -			7824	21-00340-00-RS	ADAMS	34 / 30
	PLOT SCALE = 40.0000 ' / in.	CHECKED -	REVISED -					CONTRACT NO. 93830	
	PLOT DATE = 1/3/2025	DATE -	REVISED -		SCALE: 1" = 40' SHEET 4 OF 4 SHEETS STA. 48+00.0 TO STA. 54+90.2		ILLINOIS	FED. AID PROJECT	

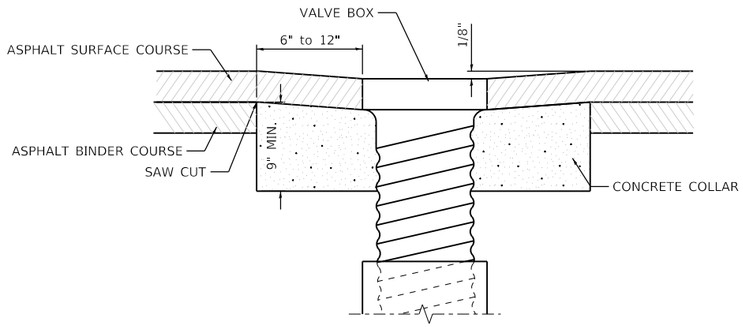

VALVE BOX ADJUSTMENT - PRIOR TO SURFACE PAVING

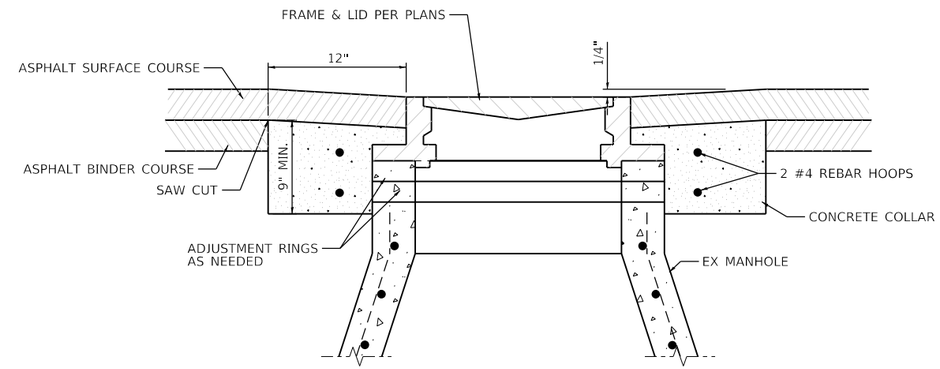

MANHOLE VALVE BOX ADJUSTMENT - PRIOR TO SURFACE PAVING

GENERAL NOTES

1. CONTRACTOR SHALL HAVE THE OPTION OF ADJUSTING BEFORE OR AFTER SURFACE PAVING.
2. CLASS SI CONCRETE SHALL BE USED FOR CONCRET COLLARS (BOTH OPTIONS).
3. SLOPE MANHOLE FRAME AS REQUIRED TO MATCH SLOPE OF STREET.
4. THE UNIT PRICE BID FOR THIS ITEM SHALL INCLUDE THE FURNISHING OF ALL MATERIALS AND LABOR NECESSARY TO ADJUST THE VALVE OR MANHOLE.
5. ADJUSTMENT SHALL BE NO MORE THAN 2'-0".

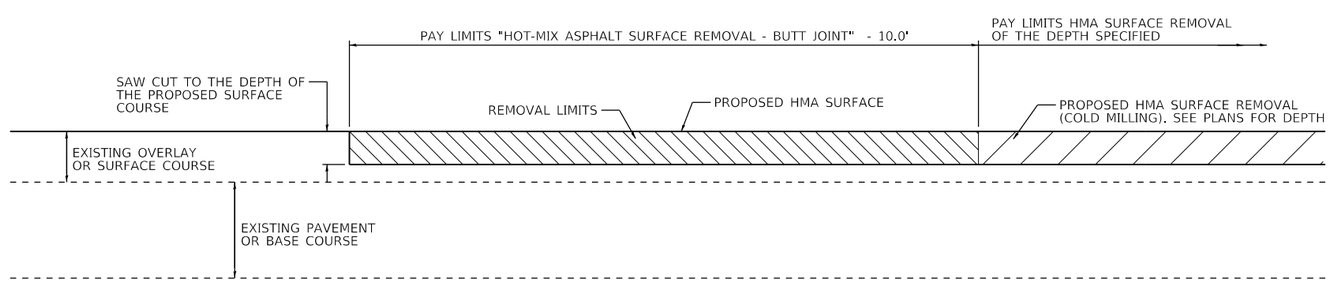

BUTT JOINT & SURFACE REMOVAL WITH RESURFACING

NOT TO SCALE

MODEL: Default
FILE NAME: F:\PROJECT FILES\MFT340 South 18th\CADD DRAWINGS\031 Misc\Det MFT340.dgn

CITY OF QUINCY UTILITIES & ENGINEERING	USER NAME = mtunis	DESIGNED -	REVISED -	CITY OF QUINCY, ILLINOIS	MISCELLANEOUS DETAILS ADJUSTMENTS AND BUTT JOINTS	F.A.U. RTE.	SECTION	COUNTY	TOTAL SHEETS / SHEET NO.
		DRAWN -	REVISED -			7824	21-00340-00-RS	ADAMS	34 / 31
	PLOT SCALE = 40.0000 ' / in.	CHECKED -	REVISED -					CONTRACT NO. 93830	
	PLOT DATE = 1/3/2025	DATE -	REVISED -		SCALE: NONE / SHEET 1 OF 1 SHEETS / STA. TO STA.		ILLINOIS	FED. AID PROJECT	

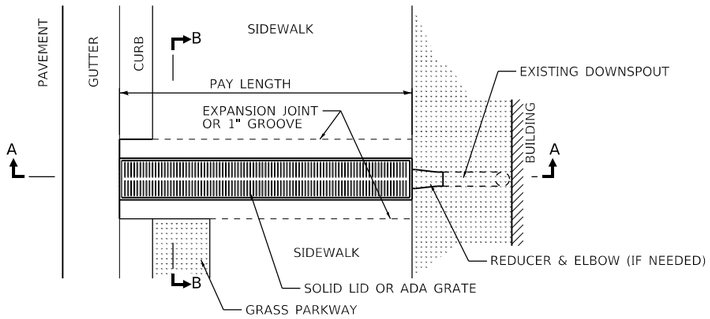

PLAN

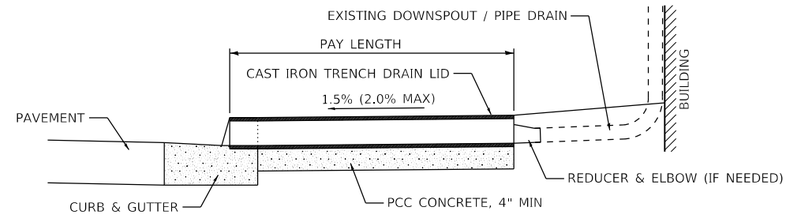

SECTION A-A

FOR LOCATIONS WHERE THE SIDEWALK IS NEXT TO THE BUILDING,
THE DOWNSPOUT SHALL DISCHARGE DIRECTLY INTO THE TRENCH AND THE
MAXIMUM OPENING BETWEEN THE GRATE AND THE DOWNSPOUT SHALL BE 1".

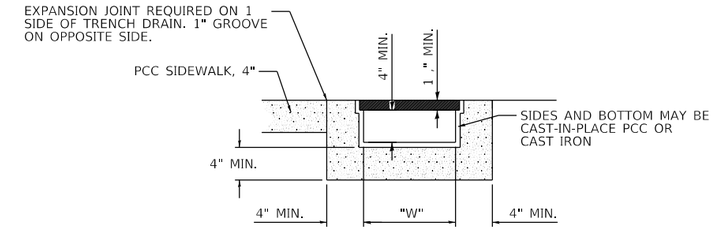

SECTION B-B

"W" = 5" MIN. FOR "TRENCH DRAIN"
= 10" MIN. FOR "TRENCH DRAIN, SPECIAL"

TRENCH DRAIN

NOT TO SCALE

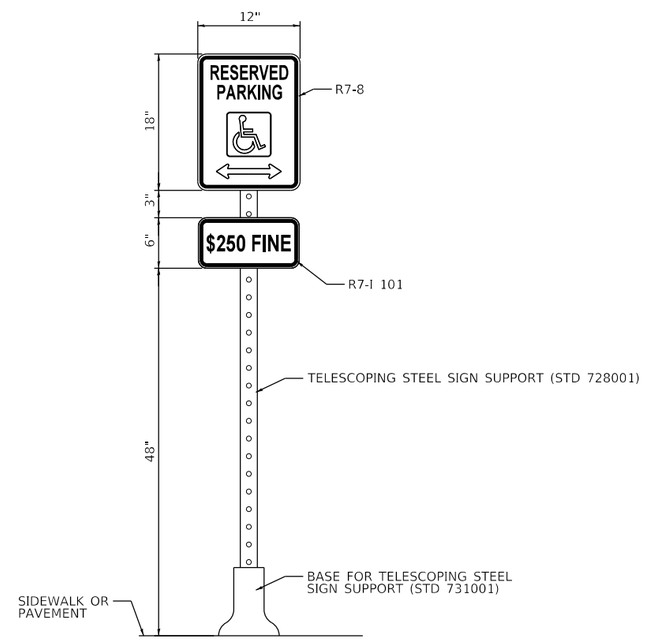

ACCESSIBLE PARKING SIGN

NOT TO SCALE

MODEL: Default
FILE NAME: F:\PROJECT FILES\MFT340 South 18th\CADD_DRAWINGS\U031 Misc\Det MFT340.dgn

CITY OF QUINCY UTILITIES & ENGINEERING	USER NAME = mtunis	DESIGNED -	REVISED -	CITY OF QUINCY, ILLINOIS	MISCELLANEOUS DETAILS TRENCH DRAINS & ACCESSIBLE PARKING SIGN	F.A.U. RTE.	SECTION	COUNTY	TOTAL SHEETS / SHEET NO.
		DRAWN -	REVISED -			7824	21-00340-00-RS	ADAMS	34 / 32
	PLOT SCALE = 40.0000 ' / in.	CHECKED -	REVISED -					CONTRACT NO. 93830	
	PLOT DATE = 1/3/2025	DATE -	REVISED -		SCALE: NONE / SHEET 1 OF 1 SHEETS / STA. / TO STA.		ILLINOIS	FED. AID PROJECT	

NOTES

1. THE CONTRACT UNIT PRICE FOR INLETS TO BE ADJUSTED WITH NEW TYPE 1 FRAME, CLOSED LID SHALL INCLUDE THE COST OF THE LID AS SHOWN, THE REINFORCED CONCRETE COVER, EXCAVATION AND FURNISHING AND COMPACTING THE SPECIFIED BACKFILL MATERIAL. ADDITIONALLY, IT WILL BE NECESSARY TO MEET ALL OTHER REQUIREMENTS OF SECTION 602 OF THE STANDARD SPECIFICATIONS.
2. FRONT EDGE OF TOP SLAB SHALL CONFORM WITH THE RADIUS OF ADJACENT CURB WHERE INLET IS LOCATED WITHIN CURB RETURNS AT INTERSECTIONS.
3. COST OF REINFORCING BARS INCIDENTAL.
4. BARS NOTED (E) SHALL BE EPOXY COATED.
5. WHEN INLET TOP IS NOT CAST IN PLACE, TOP SHALL BE PLACED IN A FULL BED OF MORTAR.
6. WHEN THE PAVEMENT GRADE IS OVER 5% THE LID SHALL BE ADJUSTED TO MATCH THE PAVEMENT GRADE.
7. SEE SPECIAL PROVISION FOR ADDITIONAL DETAILS

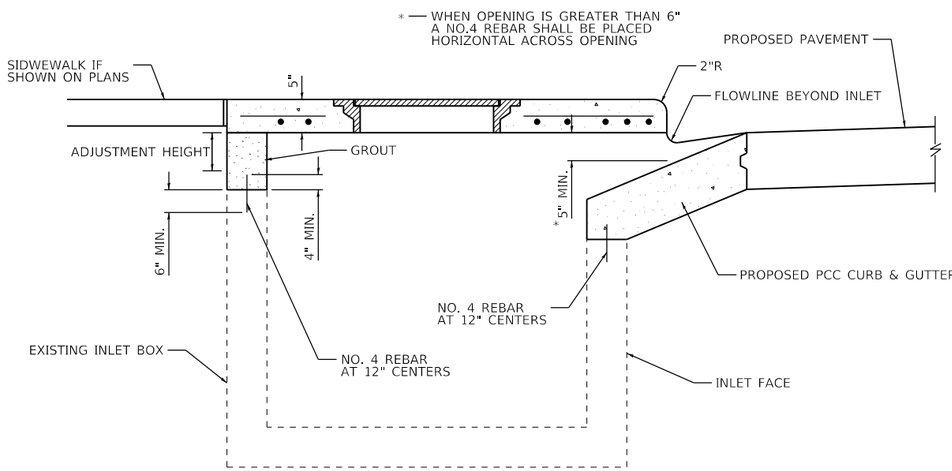

SECTION A-A

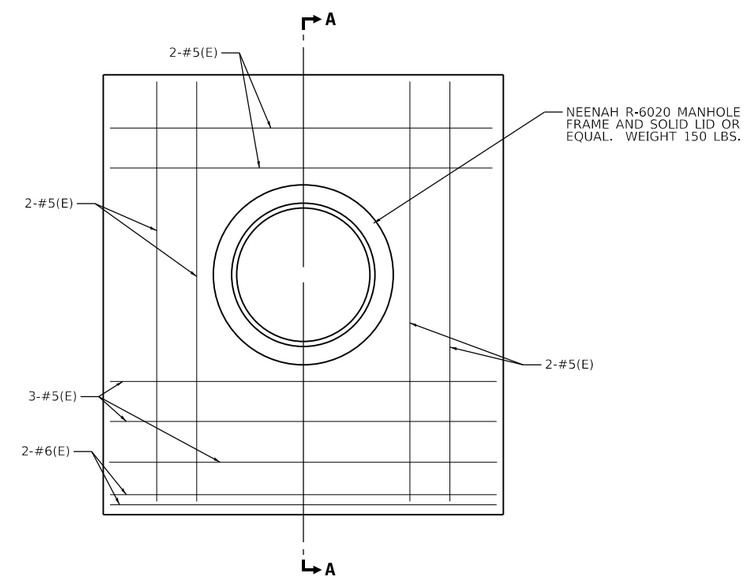

INLETS TO BE ADJUSTED (SPECIAL)

NOT TO SCALE

MODEL: Default
FILE NAME: F:\PROJECT FILES\MFT340 South 18th\CADD DRAWINGS\031 MiscDet MFT340.dgn

CITY OF QUINCY UTILITIES & ENGINEERING	USER NAME = mtunis	DESIGNED -	REVISED -	CITY OF QUINCY, ILLINOIS	MISCELLANEOUS DETAILS INLETS TO BE ADJUSTED (SPECIAL)	F.A.U. RTE.	SECTION	COUNTY	TOTAL SHEETS / SHEET NO.
		DRAWN -	REVISED -			7824	21-00340-00-RS	ADAMS	34 / 33
	PLOT SCALE = 40.0000 ' / in.	CHECKED -	REVISED -					CONTRACT NO. 93830	
	PLOT DATE = 12/30/2024	DATE -	REVISED -		SCALE: NONE / SHEET 1 OF 1 SHEETS / STA. TO STA.		ILLINOIS	FED. AID PROJECT	

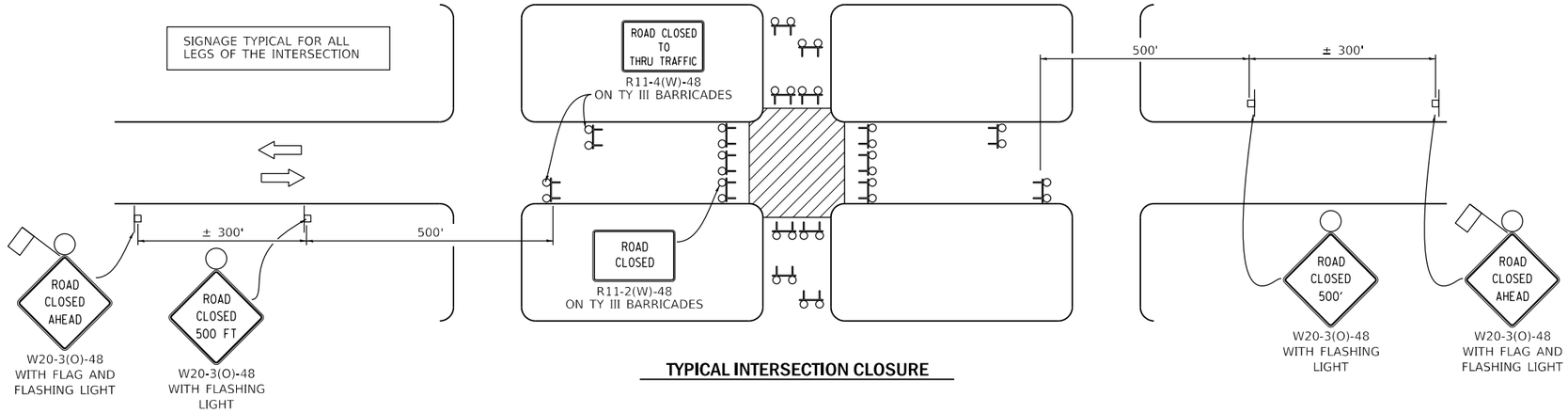

TYPICAL INTERSECTION CLOSURE

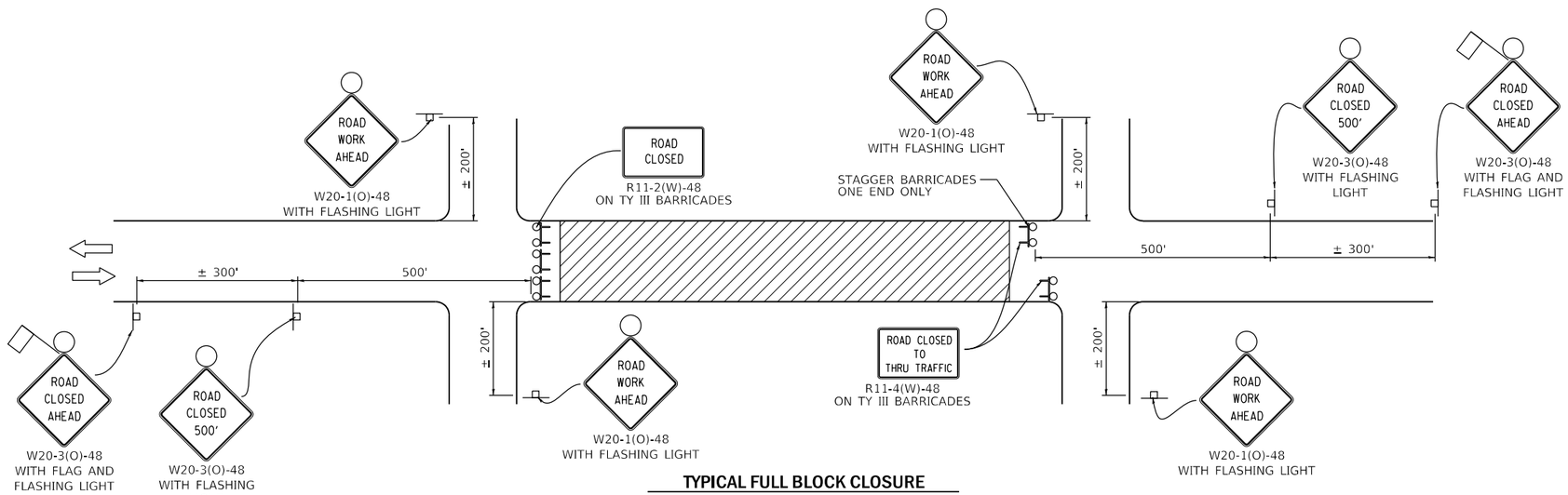

TYPICAL FULL BLOCK CLOSURE

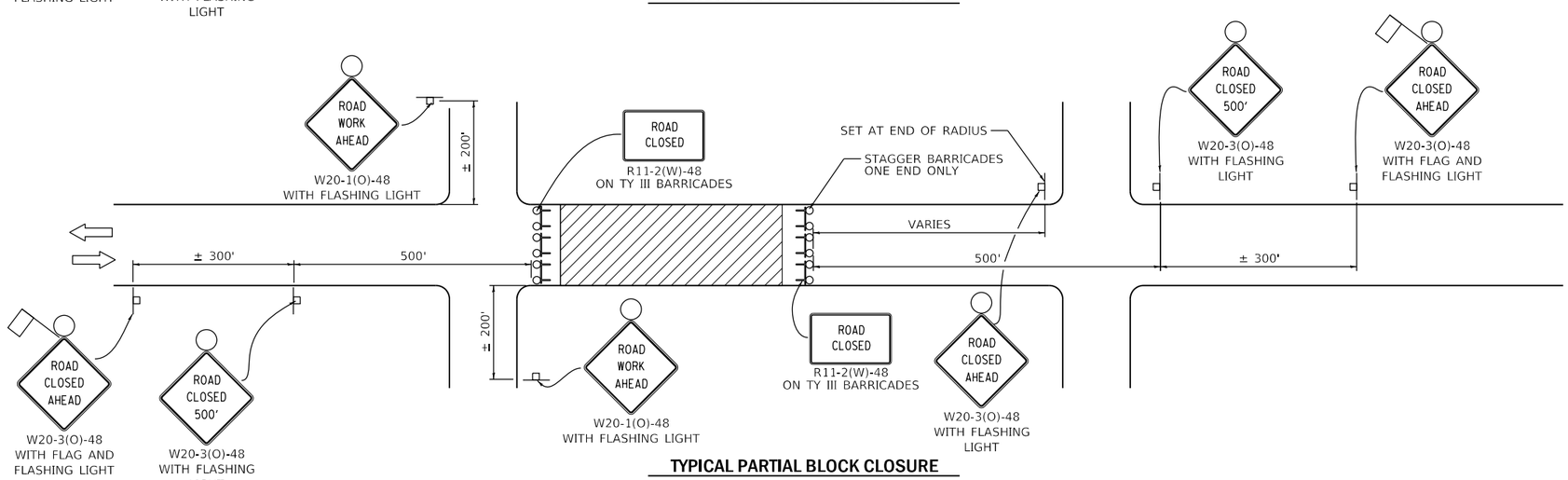

TYPICAL PARTIAL BLOCK CLOSURE

LEGEND

- WORK AREA
- TYPE III BARRICADE WITH FLASHING LIGHTS
- SIGN ON PORTABLE OR POST MOUNTED SUPPORT

GENERAL NOTES

1. CLOSURES CAN BE COMBINED AS NEEDED TO MEET THE LIMITS OF THE WORK ZONE.
2. THE EXACT NUMBER OF TYPE III BARRICADES REQUIRED TO BE DETERMINED IN THE FILED BY THE ENGINEER.
3. SIGNS SHALL BE POST MOUNTED IF THE CLOSURE IS GREATER THAN FOUR (4) CALENDAR DAYS.
4. DIMENSIONS MAY BE VARIED DUE TO SITE CONDITIONS, TOPOGRAPHY, AND URBAN LANDSCAPE.
5. ORANGE FLAG - MINIMUM 18" BY 18"
6. FOR CLOSURES ON ONE-WAY STREETS, PLACE WARNING SIGNS ON APPROACH SIDE ONLY.
7. ENGINEER TO DETERMINE WHICH APPROACH TO STAGGER THE TYPE III BARRICADES.

MODEL: Default
FILE NAME: F:\PROJECT FILES\MFT340 South 18th\CADD DRAWINGS\031 Misc\Det MFT340.dgn

CITY OF QUINCY UTILITIES & ENGINEERING	USER NAME = sbange	DESIGNED -	REVISED - 2/14/25	CITY OF QUINCY, ILLINOIS	MISCELLANEOUS DETAILS TRAFFIC CONTROL AND PROTECTION	F.A.U. RTE.	SECTION	COUNTY	TOTAL SHEETS / SHEET NO.
		DRAWN -	REVISED -			7824	21-00340-00-RS	ADAMS	34 / 34
	PLOT SCALE = 40.0000 ' / in.	CHECKED -	REVISED -					CONTRACT NO. 93830	
	PLOT DATE = 2/14/2025	DATE -	REVISED -		SCALE: NONE / SHEET 1 OF 1 SHEETS / STA. TO STA.		ILLINOIS	FED. AID PROJECT	