04-25-2025 LETTING ITEM 137

F.A.P. RTE	SECTION	COUNTY	TOTAL SHEETS	SHEET NO.
328	105B-3	WHITE	71	1
	ILLINOIS	CONTRACT NO. 78833		

FOR INDEX OF SHEETS, SEE SHEET NO. 3

FOR SUMMARY OF QUANTITIES, SEE SHEET NO. 5–10

STATE OF ILLINOIS
DEPARTMENT OF TRANSPORTATION

PROPOSED HIGHWAY PLANS

FAP ROUTE 328 (US 45)
SECTION 105B–3
PROJECT BR-1AJR(270)
BRIDGE REPLACEMENT OVER LOST CREEK
WHITE COUNTY

C–99–016–21

D–99–009–21

LOCATION OF SECTION INDICATED THUS:–

TRAFFIC DATA

FUNCTIONAL CLASSIFICATION:	MINOR ARTERIAL
ADT:	1890 (2024)
PV:	76.3%
TRUCKS:	23.7%
DESIGN SPEED:	55 MPH
POSTED SPEED:	55 MPH

TOWNSHIP

MILL SHOALS

DESIGN DESIGNATION : N/A

COORDINATE SYSTEM : NAD 1983 STATE PLANE ILLINOIS EAST FIPS 1201 FEET (HORIZONTAL) NAVD88 (VERTICAL)

EXISTING STRUCTURE NO. 097-0023
STATION 954+52.00
PROPOSED STRUCTURE NO 097-0083
STATION 954+52.00
OVER LOST CREEK
SINGLE-SPAN STEEL BEAM BRIDGE
74'-0" BK TO BK ABUTMENTS
NO SKEW

R8E, 3RD PM

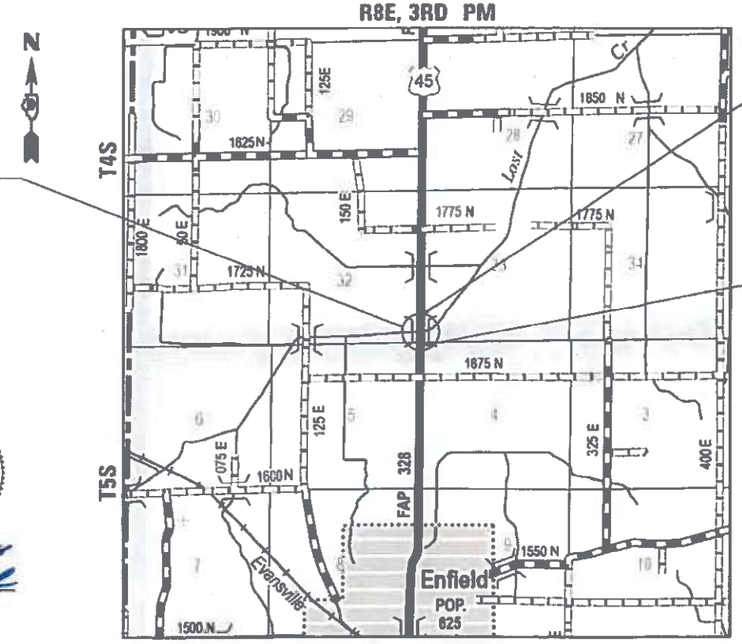

US 45
IMPROVEMENTS BEGIN STA 953+00.00

US 45
IMPROVEMENTS END STA 956+00.00

LOCATION MAP

GROSS LENGTH = 300.00 FT. = 0.06 MILES
NET LENGTH = 300.00 FT. = 0.06 MILES

ESCA CONSULTANTS, INC.

IL LICENSE NO 184000883-0006
JOB NO 1359.13

ERIC L. HENKEL
54490
LICENSED PROFESSIONAL ENGINEER OF STATE OF ILLINOIS

EXPIRES 11 30 24

SIGNATURE

7-12-2024
DATE

J.U.L.I.E.
JOINT UTILITY LOCATION INFORMATION FOR EXCAVATION
1–800–892–0123
OR 811

PROJECT ENGINEER: EHREN KIRBY
PROJECT DESIGNER: ESCA CONSULTANTS, INC.

CONTRACT NO. 78833

STATE OF ILLINOIS
DEPARTMENT OF TRANSPORTATION

SUBMITTED July 23 20 24
Kirk H. Brown
REGION FIVE ENGINEER

March 21 20 25
ENGINEER OF DESIGN AND ENVIRONMENT

March 21 20 25
DIRECTOR OF HIGHWAYS PROJECT IMPLEMENTATION

PRINTED BY THE AUTHORITY OF THE STATE OF ILLINOIS

PREPARED BY: _____
DISTRICT STUDIES & PLANS ENGINEER

EXAMINED BY: _____
DISTRICT LAND ACQUISITION ENGINEER

EXAMINED BY: _____
DISTRICT PROGRAM DEVELOPMENT ENGINEER

EXAMINED BY: _____
DISTRICT OPERATIONS ENGINEER

EXAMINED BY: _____
DISTRICT PROJECT IMPLEMENTATION ENGINEER

EXAMINED BY: _____
DISTRICT CONSTRUCTION ENGINEER

EXAMINED BY: _____
DISTRICT MATERIALS ENGINEER

MODEL: PLOT
FILE NAME: \\ISDOT01\1359-13_78833\CADD\Files\wayCADD Sheets\09-78833-sht-geno01.dgn

ESCA CONSULTANTS, INC.	USER NAME = IRC	DESIGNED - IRC	REVISED -	STATE OF ILLINOIS DEPARTMENT OF TRANSPORTATION	SIGNATURE BLOCK	F.A.P. RTE.	SECTION	COUNTY	TOTAL SHEETS	SHEET NO.
	ESCA PROJECT NO. 1359.13	DRAWN - IRC	REVISED -			328	105B-3	WHITE	71	2
	PLOT SCALE = 0.1667 ' / in.	CHECKED - ELH	REVISED -					CONTRACT NO. 78833		
	PLOT DATE = 7/9/2024	DATE - 09/23	REVISED -		SCALE: NONE / SHEET NO. 1 OF 1 SHEETS / STA. / TO STA.			ILLINOIS / FED. AID PROJECT		

LIST OF ILLINOIS DOT HIGHWAY STANDARDS

STANDARD NO.	DESCRIPTION
000001-08	STANDARD SYMBOLS, ABBREVIATIONS AND PATTERNS
001001-02	AREAS OF REINFORCEMENT BARS
001006	DECIMAL OF AN INCH AND OF A FOOT
280001-07	TEMPORARY EROSION CONTROL SYSTEMS
420001-10	PAVEMENT JOINTS
420401-13	PAVEMENT CONNECTOR (PCC) FOR BRIDGE APPROACH SLAB
420701-03	PAVEMENT WELDED WIRE REINFORCEMENT
483001-06	PCC SHOULDER
515001-04	NAME PLATE FOR BRIDGES
601101-02	CONCRETE HEADWALL FOR PIPE UNDERDRAIN
630001-13	STEEL PLATE BEAM GUARDRAIL
630201-07	PCC / HMA STABILIZATION AT STEEL PLATE BEAM GUARDRAIL
630301-09	SHOULDER WIDENING FOR TYPE 1 (SPECIAL) GUARDRAIL TERMINALS
631031-18	TRAFFIC BARRIER TERMINAL, TYPE 6
666001-01	RIGHT OF WAY MARKERS
701001-02	OFF-RD OPERATIONS, 2L, 2W, MORE THAN 15' (4.5 m) AWAY
701006-05	OFF-RD OPERATIONS, 2L, 2W, 15' (4.5 m) TO 24" (600 mm) FROM PAVEMENT EDGE
701011-04	OFF-RD MOVING OPERATIONS, 2L, 2W, DAY ONLY
701201-05	LANE CLOSURE, 2L, 2W, DAY ONLY, FOR SPEEDS ≥ 45 MPH
701301-04	LANE CLOSURE, 2L, 2W, SHORT TIME OPERATIONS
701311-03	LANE CLOSURE, 2L, 2W, MOVING OPERATIONS - DAY ONLY
701321-19	LANE CLOSURE, 2L, 2W, BRIDGE REPAIR WITH BARRIER
701326-04	LANE CLOSURE, 2L, 2W, PAVEMENT WIDENING, FOR SPEEDS ≥ 45 MPH
701901-10	TRAFFIC CONTROL DEVICES
704001-08	TEMPORARY CONCRETE BARRIER
720001-01	SIGN PANEL MOUNTING DETAILS
720006-04	SIGN PANEL ERECTION DETAILS
720011-01	METAL POSTS FOR SIGNS, MARKERS & DELINEATORS
725001-01	OBJECT AND TERMINAL MARKERS
780001-05	TYPICAL PAVEMENT MARKINGS
782006-01	GUARDRAIL AND BARRIER WALL REFLECTOR MOUNTING DETAILS
862001-01	UNINTERRUPTABLE POWER SUPPLY (UPS)

INDEX OF SHEETS

REV - MS

MODEL: PLOT
FILE NAME: Y:\IDOT\1359-13_78833\CADD\Highway\CADD Sheets\D978833-sht-gennote02.dgn

ESCA CONSULTANTS, INC. CIVIL & STRUCTURAL ENGINEERS

USER NAME = IRC	DESIGNED - IRC	REVISED -	
ESCA PROJECT NO. 1359.13	DRAWN - IRC	REVISED -	
PLOT SCALE = 0.1667 ' / in.	CHECKED - ELH	REVISED -	
PLOT DATE = 8/9/2024	DATE - 08/24	REVISED -	

STATE OF ILLINOIS
DEPARTMENT OF TRANSPORTATION

INDEX OF SHEETS AND HIGHWAY STANDARDS

SCALE: NONE | SHEET NO. 1 OF 1 SHEETS | STA. TO STA.

F.A.P. RTE.	SECTION	COUNTY	TOTAL SHEETS	SHEET NO.
328	105B-3	WHITE	71	3

CONTRACT NO. 78833

ILLINOIS | FED. AID PROJECT

GENERAL NOTES

1. FACTORS USED FOR ESTIMATING PLAN QUANTITIES ARE AS FOLLOWS AND SHALL NOT BE USED FOR THE BASIS OF FINAL QUANTITIES:

ALL HOT-MIX ASPHALT	2.016 TONS/CU YD
ALL AGGREGATE	2.05 TONS/CU YD
RIPRAP	1.50 TONS/CU YD

2. THE QUANTITY OF SHORT TERM PAVEMENT MARKING SHOWN IN THE PLANS IS BASED ON ONE APPLICATION EACH FOR THE HMA SURFACE REMOVAL AND SURFACE COURSE.

3. AT ALL LOCATIONS WHERE THE PROPOSED HOT-MIX ASPHALT OR CONCRETE PAVEMENT JOINS AN EXISTING HOT-MIX ASPHALT OR CONCRETE PAVEMENT, A FULL DEPTH SAWED JOINT SHALL BE CONSTRUCTED. THE COST OF THIS JOINT WILL BE INCLUDED IN THE COST OF THE TYPE OF PAVEMENT BEING CONSTRUCTED.

4. EDGE LINE PAVEMENT MARKING SHALL BE REMOVED IF A 10 FT LANE WIDTH CANNOT BE MAINTAINED. TEMPORARY EDGE LINES SHALL BE INSTALLED WHEN THE EDGE LINES ARE REMOVED.

5. INCIDENTAL HOT-MIX ASPHALT SURFACING SHALL BE PAVED IN A SEPARATE OPERATION FROM THE MAINLINE PAVEMENT.

6. REMOVAL OF ABANDONED UTILITIES SHALL BE INCLUDED IN THE COST OF EARTH EXCAVATION.

COMMITMENTS

1. NONE.

HMA MIXTURES REQUIREMENTS

LOCATIONS	HOT-MIX ASPHALT SHOULDERS TOP LIFT	HOT-MIX ASPHALT SHOULDERS LOWER LIFTS	HOT-MIX ASPHALT SURFACE COURSE & INCIDENTAL HMA
MIXTURE USE(S):	HOT-MIX ASPHALT SURFACE COURSE, MIX C, N70	HOT-MIX ASPHALT BINDER COURSE, N70	HOT-MIX ASPHALT SURFACE COURSE, MIX C, N70
PG:	PG64-22	PG64-22	PG64-22
DESIGN AIR VOIDS:	4.0%, 70 GYRATION DESIGN	4.0%, 70 GYRATION DESIGN	4.0%, 70 GYRATION DESIGN
MIX COMPOSITION: (GRADATION MIXTURE)	IL-9.5mm	IL-19.0mm	IL-9.5mm
FRICTION AGGREGATE:	SURFACE C	N/A	SURFACE C
MIXTURE WEIGHT:	112 LBS/SQ YD/IN	112 LBS/SQ YD/IN	112 LBS/SQ YD/IN
QUALITY MANAGEMENT PROGRAM:	QC/QA	QC/QA	QC/QA
SUBLOT SIZE:	N/A	N/A	N/A
MATERIAL TRANSFER DEVICE	NO	NO	NO

PAVING LIFTS

RESURFACING VARIES 1½" TO 2";
1½" TO 2" HOT-MIX ASPHALT SURFACE COURSE, MIX C, N70, 9.5mm

SHOULDER FULL DEPTH;
1¾" HOT-MIX ASPHALT SURFACE COURSE, MIX C, N70, 9.5mm
2¼" HOT-MIX ASPHALT BINDER COURSE, N70, 19.0mm
4" HOT-MIX ASPHALT BINDER COURSE, N70, 19.0mm

SUMMARY OF QUANTITIES

CODE NO.	ITEM	UNIT	TOTAL QUANTITY	80% FEDERAL 20% STATE ROADWAY	80% FEDERAL 20% STATE STRUCTURE
				CONSTRUCTION CODE	
				0010	0010
				ROADWAY	S.N. 097-0083
20200100	EARTH EXCAVATION	CU YD	475	475	
20300100	CHANNEL EXCAVATION	CU YD	140	140	
20700220	POROUS GRANULAR EMBANKMENT	CU YD	50	50	
25000200	SEEDING, CLASS 2	ACRE	0.50	0.50	
25000350	SEEDING, CLASS 7	ACRE	0.50	0.50	
25000400	NITROGEN FERTILIZER NUTRIENT	POUND	45	45	
25000500	PHOSPHORUS FERTILIZER NUTRIENT	POUND	45	45	
25000600	POTASSIUM FERTILIZER NUTRIENT	POUND	45	45	
25000700	AGRICULTURAL GROUND LIMESTONE	TON	1.0	1.0	
25100115	MULCH, METHOD 2	ACRE	1.0	1.0	
25100630	EROSION CONTROL BLANKET	SQ YD	2148	2148	
28000250	TEMPORARY EROSION CONTROL SEEDING	POUND	100	100	
28000305	TEMPORARY DITCH CHECKS	FOOT	63	63	
28000400	PERIMETER EROSION BARRIER	FOOT	605	605	

REV - MS

SUMMARY OF QUANTITIES

CODE NO.	ITEM	UNIT	TOTAL QUANTITY	80% FEDERAL 20% STATE ROADWAY CONSTRUCTION CODE 0010 ROADWAY	80% FEDERAL 20% STATE STRUCTURE CONSTRUCTION CODE 0010 S.N. 097-0083
28000500	INLET AND PIPE PROTECTION	EACH	1	1	
28100109	STONE RIPRAP, CLASS A5	SQ YD	592		592
28200200	FILTER FABRIC	SQ YD	592		592
35102000	AGGREGATE BASE COURSE, TYPE B 8"	SQ YD	45	45	
35102200	AGGREGATE BASE COURSE, TYPE B 10"	SQ YD	205	205	
40600290	BITUMINOUS MATERIALS (TACK COAT)	POUND	785	785	
40600982	HOT-MIX ASPHALT SURFACE REMOVAL - BUTT JOINT	SQ YD	370	370	
40600990	TEMPORARY RAMP	SQ YD	58	58	
40604052	HOT-MIX ASPHALT SURFACE COURSE, IL-9.5, MIX "C", N70	TON	45	45	
40800050	INCIDENTAL HOT-MIX ASPHALT SURFACING	TON	5	5	
42000060	WELDED WIRE REINFORCEMENT	SQ YD	110	110	
42000080	PAVEMENT CONNECTOR (PCC) FOR BRIDGE APPROACH SLAB	SQ YD	110	110	
42001300	PROTECTIVE COAT	SQ YD	437	437	
44000100	PAVEMENT REMOVAL	SQ YD	335	335	
44004250	PAVED SHOULDER REMOVAL	SQ YD	30	30	

REV - MS

SUMMARY OF QUANTITIES

CODE NO.	ITEM	UNIT	TOTAL QUANTITY	80% FEDERAL 20% STATE ROADWAY	80% FEDERAL 20% STATE STRUCTURE
				CONSTRUCTION CODE	
				0010	0010
				ROADWAY	S.N. 097-0083
44213204	TIE BARS 3/4"	EACH	8	8	
48203100	HOT-MIX ASPHALT SHOULDERS	TON	68	68	
48300500	PORTLAND CEMENT CONCRETE SHOULDERS 10"	SQ YD	327	327	
50100100	REMOVAL OF EXISTING STRUCTURES	EACH	1		1
50200100	STRUCTURE EXCAVATION	CU YD	250		250
50300225	CONCRETE STRUCTURES	CU YD	65		65
50300255	CONCRETE SUPERSTRUCTURE	CU YD	120.8		120.8
50300260	BRIDGE DECK GROOVING	SQ YD	540		540
50300300	PROTECTIVE COAT	SQ YD	570		570
50301350	CONCRETE SUPERSTRUCTURE (APPROACH SLAB)	CU YD	95		95
50500105	FURNISHING AND ERECTING STRUCTURAL STEEL	L SUM	1		1
50500505	STUD SHEAR CONNECTORS	EACH	1314		1314
50800205	REINFORCEMENT BARS, EPOXY COATED	POUND	69080		69080
50800515	BAR SPLICERS	EACH	534		534

REV - MS

SUMMARY OF QUANTITIES

CODE NO.	ITEM	UNIT	TOTAL QUANTITY	80% FEDERAL 20% STATE ROADWAY	80% FEDERAL 20% STATE STRUCTURE
				CONSTRUCTION CODE	
				0010	0010
				ROADWAY	S.N. 097-0083
51201610	FURNISHING STEEL PILES HP12X63	FOOT	555		555
51202305	DRIVING PILES	FOOT	555		555
51203610	TEST PILE STEEL HP12X63	EACH	2		2
51204650	PILE SHOES	EACH	12		12
51500100	NAME PLATES	EACH	1		1
52100520	ANCHOR BOLTS, 1"	EACH	24		24
52200020	TEMPORARY SOIL RETENTION SYSTEM	SQ FT	338		338
54010303	PRECAST CONCRETE BOX CULVERTS 3' X 3'	FOOT	36	36	
58600101	GRANULAR BACKFILL FOR STRUCTURES	CU YD	115		115
59100100	GEOCOMPOSITE WALL DRAIN	SQ YD	62		62
60100060	CONCRETE HEADWALLS FOR PIPE DRAINS	EACH	4	4	
60146304	PIPE UNDERDRAINS FOR STRUCTURES 4"	FOOT	154		154
* 63000001	STEEL PLATE BEAM GUARDRAIL, TYPE A, 6 FOOT POSTS	FOOT	225	225	
* 63100085	TRAFFIC BARRIER TERMINAL, TYPE 6	EACH	4	4	

REV - MS

* SPECIALTY ITEM

MODEL: PLOT04
FILE NAME: Y:\DOT\1359-13-78833\CADD\Highway\CADD Sheets\D978833-sht-soq01.dgn

ESCA CONSULTANTS, INC. CIVIL & STRUCTURAL ENGINEERS

USER NAME = IRC	DESIGNED - IRC	REVISED -	
ESCA PROJECT NO. 1359.13	DRAWN - IRC	REVISED -	
PLOT SCALE = 0.1667 ' / in.	CHECKED - ELH	REVISED -	
PLOT DATE = 8/16/2024	DATE - 07/24	REVISED -	

STATE OF ILLINOIS
DEPARTMENT OF TRANSPORTATION

SUMMARY OF QUANTITIES

SCALE: NONE | SHEET NO. 4 OF 7 SHEETS | STA. TO STA.

F.A.P. RTE.	SECTION	COUNTY	TOTAL SHEETS	SHEET NO.
328	105B-3	WHITE	71	8
		CONTRACT NO. 78833		
		ILLINOIS FED. AID PROJECT		

SUMMARY OF QUANTITIES

	CODE NO.	ITEM	UNIT	TOTAL QUANTITY	80% FEDERAL 20% STATE ROADWAY CONSTRUCTION CODE 0010 ROADWAY	80% FEDERAL 20% STATE STRUCTURE CONSTRUCTION CODE 0010 S.N. 097-0083
*	63100167	TRAFFIC BARRIER TERMINAL, TYPE 1 (SPECIAL) TANGENT	EACH	4	4	
	63200310	GUARDRAIL REMOVAL	FOOT	456	456	
	66600105	FURNISHING AND ERECTING RIGHT OF WAY MARKERS	EACH	8	8	
	67000400	ENGINEER'S FIELD OFFICE, TYPE A	CAL MO	8	8	
	67100100	MOBILIZATION	L SUM	1	1	
	70100405	TRAFFIC CONTROL AND PROTECTION, STANDARD 701321	EACH	1	1	
	70100450	TRAFFIC CONTROL AND PROTECTION, STANDARD 701201	L SUM	1	1	
	70100500	TRAFFIC CONTROL AND PROTECTION, STANDARD 701326	L SUM	1	1	
	70103815	TRAFFIC CONTROL SURVEILLANCE	CAL DA	6	6	
	70106500	TEMPORARY BRIDGE TRAFFIC SIGNALS	EACH	1	1	
	70106700	TEMPORARY RUMBLE STRIPS	EACH	6	6	
	70107025	CHANGEABLE MESSAGE SIGN	CAL DA	28	28	
	70300100	SHORT TERM PAVEMENT MARKING	FOOT	92	92	
	70300150	SHORT TERM PAVEMENT MARKING REMOVAL	SQ FT	32	32	

* SPECIALTY ITEM

REV - MS

SUMMARY OF QUANTITIES

	CODE NO.	ITEM	UNIT	TOTAL QUANTITY	80% FEDERAL 20% STATE ROADWAY CONSTRUCTION CODE 0010 ROADWAY	80% FEDERAL 20% STATE STRUCTURE CONSTRUCTION CODE 0010 S.N. 097-0083
	70300221	TEMPORARY PAVEMENT MARKING - LINE 4"- PAINT	FOOT	920	920	
	70400100	TEMPORARY CONCRETE BARRIER	FOOT	387.5	387.5	
	70400125	PINNING TEMPORARY CONCRETE BARRIER	EACH	59	59	
	70400200	RELOCATE TEMPORARY CONCRETE BARRIER	FOOT	387.5	387.5	
	70600260	IMPACT ATTENUATORS, TEMPORARY (FULLY REDIRECTIVE, NARROW), TEST LEVEL 3	EACH	2	2	
	70600332	IMPACT ATTENUATORS, RELOCATE (FULLY REDIRECTIVE, NARROW), TEST LEVEL 3	EACH	2	2	
*	72501000	TERMINAL MARKER - DIRECT APPLIED	EACH	4	4	
*	78009004	MODIFIED URETHANE PAVEMENT MARKING - LINE 4"	FOOT	920	920	
*	78200005	GUARDRAIL REFLECTORS, TYPE A	EACH	10	10	
*	78200010	BARRIER WALL REFLECTORS, TYPE B	EACH	8	8	
	78300200	RAISED REFLECTIVE PAVEMENT MARKER REMOVAL	EACH	2	2	
	78300201	PAVEMENT MARKING REMOVAL - GRINDING	SQ FT	532	532	
*	86200300	UNINTERRUPTABLE POWER SUPPLY, EXTENDED	EACH	1	1	
	X1200050	BOX CULVERT REMOVAL	FOOT	20	20	

* SPECIALTY ITEM

REV - MS

MODEL: PLOT06
FILE NAME: Y:\IDOT\1359-13_78833\CADD\Highway\CADD Sheets\0978833-sht-soq01.dgn

ESCA CONSULTANTS, INC. CIVIL & STRUCTURAL ENGINEERS

USER NAME = IRC	DESIGNED - IRC	REVISED -	
ESCA PROJECT NO. 1359.13	DRAWN - IRC	REVISED -	
PLOT SCALE = 0.1667 ' / in.	CHECKED - ELH	REVISED -	
PLOT DATE = 8/16/2024	DATE - 07/24	REVISED -	

STATE OF ILLINOIS
DEPARTMENT OF TRANSPORTATION

SUMMARY OF QUANTITIES

SCALE: NONE | SHEET NO. 6 OF 7 SHEETS | STA. | TO STA.

F.A.P. RTE.	SECTION	COUNTY	TOTAL SHEETS	SHEET NO.
328	105B-3	WHITE	71	10
		CONTRACT NO. 78833		
		ILLINOIS FED. AID PROJECT		

SUMMARY OF QUANTITIES

CODE NO.	ITEM	UNIT	TOTAL QUANTITY	80% FEDERAL 20% STATE ROADWAY	80% FEDERAL 20% STATE STRUCTURE
				CONSTRUCTION CODE	
				0010	0010
				ROADWAY	S.N. 097-0083
X5040140	PRECAST BOX CULVERT END SECTION	EACH	2	2	
X5080530	BAR TERMINATOR	EACH	566		566
Z0013798	CONSTRUCTION LAYOUT	L SUM	1	1	
Ø Z0076600	TRAINEES	HOUR	1000	1000	
Ø Z0076604	TRAINEES TRAINING PROGRAM GRADUATE	HOUR	1000	1000	

Ø 0042

REV - MS

MODEL: PLOT07
FILE NAME: Y:\IDOT\1359-13_78833\CADD\Highway\CADD Sheets\0978833-sht-soq01.dgn

ESCA CONSULTANTS, INC.

USER NAME = IRC	DESIGNED - IRC	REVISED -	
ESCA PROJECT NO. 1359.13	DRAWN - IRC	REVISED -	
PLOT SCALE = 0.1667 ' / in.	CHECKED - ELH	REVISED -	
PLOT DATE = 8/16/2024	DATE - 07/24	REVISED -	

STATE OF ILLINOIS
DEPARTMENT OF TRANSPORTATION

SUMMARY OF QUANTITIES

SCALE: NONE | SHEET NO. 7 OF 7 SHEETS | STA. | TO STA.

F.A.P. RTE.	SECTION	COUNTY	TOTAL SHEETS	SHEET NO.
328	105B-3	WHITE	71	11
		CONTRACT NO. 78833		
		ILLINOIS	FED. AID PROJECT	

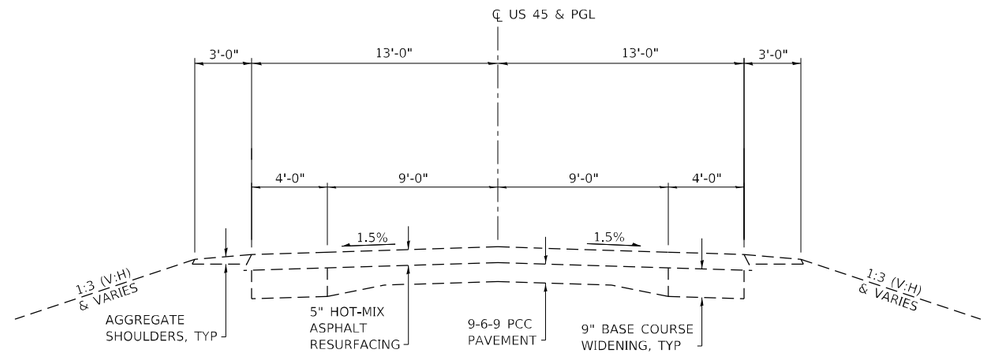

EXISTING TYPICAL SECTION

STA 946+00.00 TO STA 951+43.46

STA 955+12.95 TO STA 964+00.00

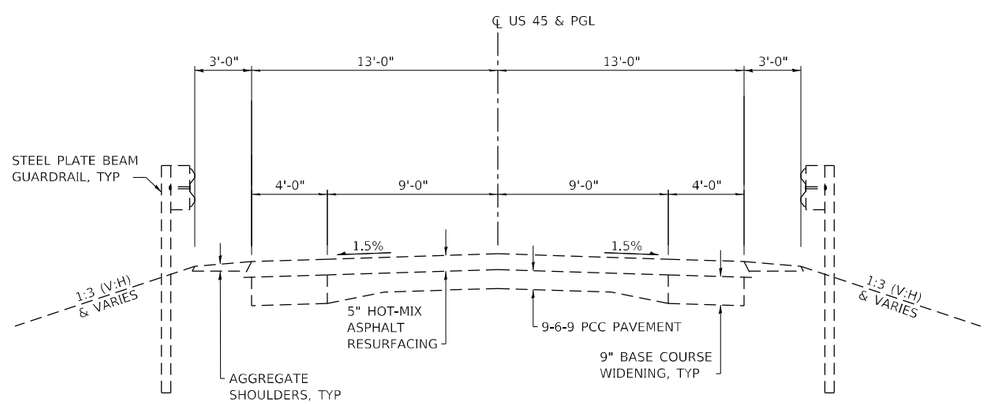

EXISTING TYPICAL SECTION

STA 951+43.46 TO STA 954+06.00

STA 954+98.00 TO STA 955+12.95

MODEL: PLOT
FILE NAME: Y:\IDOT\1359-13_78833\CADD\Highway\CADD Sheets\D978833-sht-typical01.dgn

ESCA CONSULTANTS, INC.	USER NAME = IRC	DESIGNED - ATN	REVISED -	STATE OF ILLINOIS DEPARTMENT OF TRANSPORTATION	US 45 TYPICAL SECTIONS	F.A.P. RTE.	SECTION	COUNTY	TOTAL SHEETS / SHEET NO.
	ESCA PROJECT NO. 1359.13	DRAWN - ATN	REVISED -			328	105B-3	WHITE	71 / 12
	PLOT SCALE = 0.1667 ' / in.	CHECKED - ELH	REVISED -					CONTRACT NO. 78833	
	PLOT DATE = 8/9/2024	DATE - 10/23	REVISED -		SCALE: AS SHOWN / SHEET NO. 1 OF 4 SHEETS / STA. / TO STA.		ILLINOIS	FED. AID PROJECT	

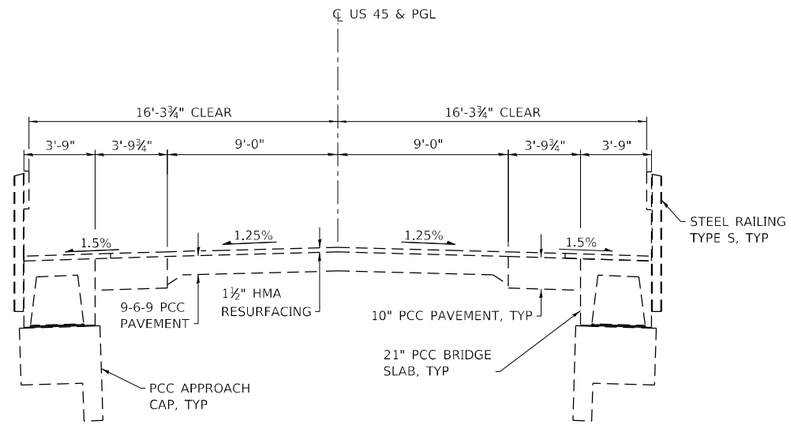

EXISTING TYPICAL SECTION
STA 954+06.00 TO STA 954+28.00
STA 954+76.00 TO STA 954+98.00

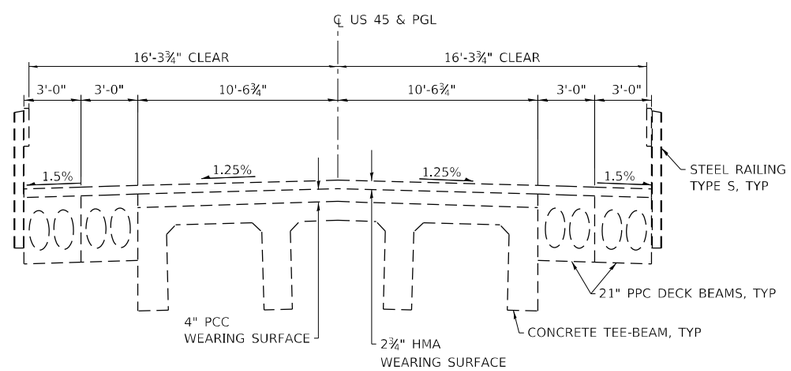

EXISTING TYPICAL SECTION
STA 954+28.00 TO STA 954+76.00

MODEL: PLOT
FILE NAME: Y:\IDOT\1359-13_78833\CADD\Highway\CADD Sheets\D978833-sht-typical02.dgn

ESCA CONSULTANTS, INC.	USER NAME = IRC	DESIGNED - ATN	REVISED -	STATE OF ILLINOIS DEPARTMENT OF TRANSPORTATION	US 45 TYPICAL SECTIONS	F.A.P. RTE.	SECTION	COUNTY	TOTAL SHEETS / SHEET NO.
	ESCA PROJECT NO. 1359.13	DRAWN - ATN	REVISED -			328	105B-3	WHITE	71 / 13
	PLOT SCALE = 0.1667 ' / in.	CHECKED - ELH	REVISED -					CONTRACT NO. 78833	
	PLOT DATE = 8/9/2024	DATE - 10/23	REVISED -		SCALE: AS SHOWN / SHEET NO. 2 OF 4 SHEETS / STA. / TO STA.		ILLINOIS	FED. AID PROJECT	

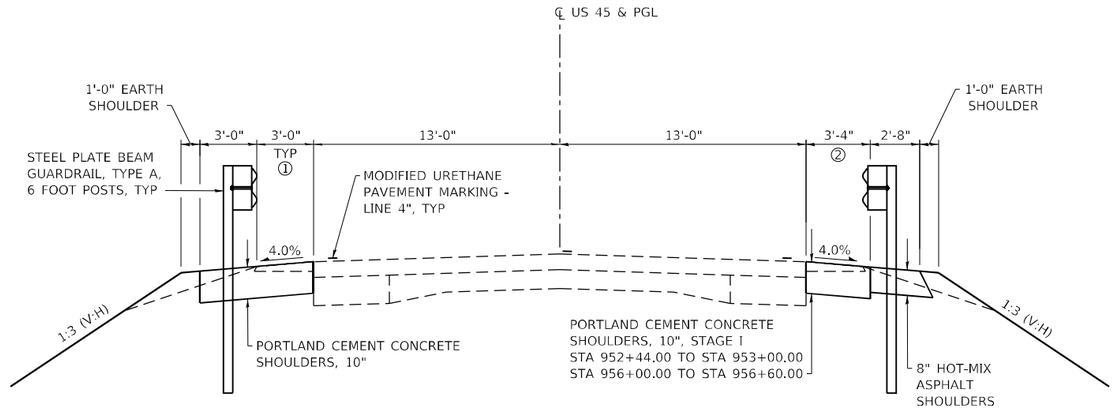

PROPOSED TYPICAL SECTION
STA 952+06.20 TO STA 953+00.00
STA 956+00.00 TO STA 956+97.80

① DIMENSION TO FACE OF GUARDRAIL

② DIMENSION TO EDGE OF PORTLAND CEMENT CONCRETE SHOULDERS, 10"

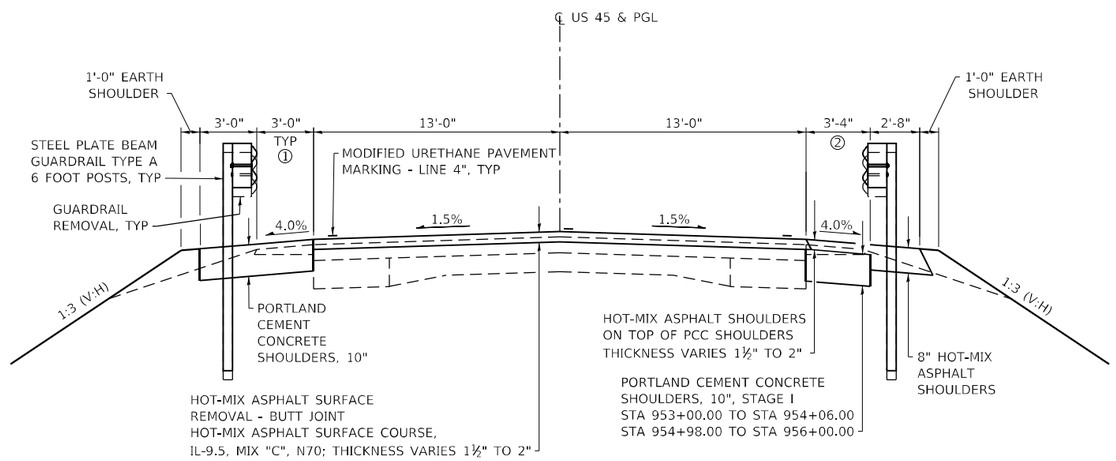

PROPOSED TYPICAL SECTION
STA 953+00.00 TO STA 953+70.85
STA 955+33.15 TO STA 956+00.00

MODEL: PLOT
FILE NAME: Y:\IDOT\1359-13_78833\CADD\Highway\CADD Sheets\0978833-sht-typical03.dgn

ESCA CONSULTANTS, INC.	USER NAME = IRC	DESIGNED - ATN	REVISED -	STATE OF ILLINOIS DEPARTMENT OF TRANSPORTATION	US 45 TYPICAL SECTIONS	F.A.P. RTE.	SECTION	COUNTY	TOTAL SHEETS / SHEET NO.
	ESCA PROJECT NO. 1359.13	DRAWN - ATN	REVISED -			328	105B-3	WHITE	71 / 14
	PLOT SCALE = 0.1667 ' / in.	CHECKED - ELH	REVISED -					CONTRACT NO. 78833	
	PLOT DATE = 8/9/2024	DATE - 08/24	REVISED -		SCALE: AS SHOWN / SHEET NO. 3 OF 4 SHEETS / STA. / TO STA.		ILLINOIS	FED. AID PROJECT	

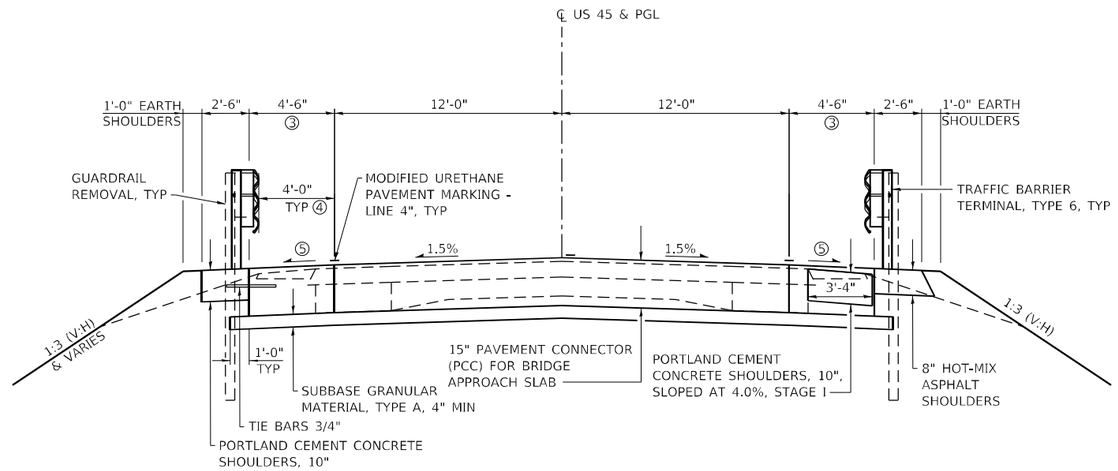

③ DIMENSION TO EDGE OF PAVEMENT

④ DIMENSION TO FACE OF GUARDRAIL

⑤ TRANSITION FROM 2.0% AT BRIDGE APPROACH SLAB TO 4.0% AT END OF PAVEMENT CONNECTOR

PROPOSED TYPICAL SECTION
STA 953+70.85 TO STA 953+85.85
STA 955+18.15 TO STA 955+33.15

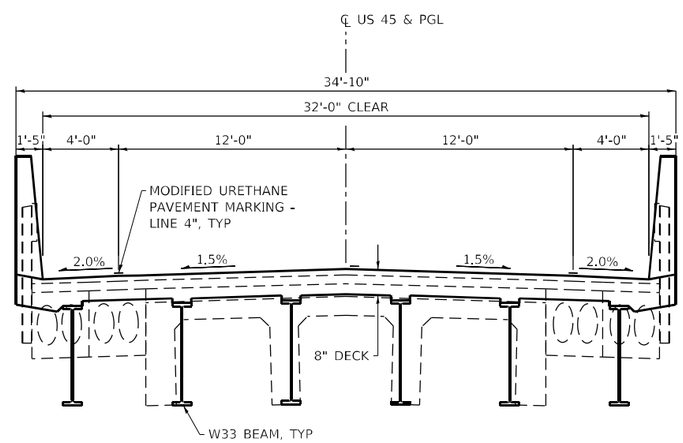

PROPOSED TYPICAL SECTION
STA 954+16.00 TO STA 954+88.00

MODEL: PLOT
FILE NAME: Y:\IDOT\1359-13_78833\CADD\Highway\CADD Sheets\0978833-sht-typical04.dgn

ESCA CONSULTANTS, INC.	USER NAME = IRC	DESIGNED - ATN	REVISED -	STATE OF ILLINOIS DEPARTMENT OF TRANSPORTATION	US 45 TYPICAL SECTIONS	F.A.P. RTE.	SECTION	COUNTY	TOTAL SHEETS / SHEET NO.
	ESCA PROJECT NO. 1359.13	DRAWN - ATN	REVISED -			328	105B-3	WHITE	71 / 15
	PLOT SCALE = 0.1667 ' / in.	CHECKED - ELH	REVISED -					CONTRACT NO. 78833	
	PLOT DATE = 8/9/2024	DATE - 08/24	REVISED -		SCALE: AS SHOWN / SHEET NO. 4 OF 4 SHEETS / STA. / TO STA.		ILLINOIS	FED. AID PROJECT	

EARTHWORK SCHEDULE

LOCATION			EARTH EXCAVATION	AVERAGE SHRINKAGE FACTOR	EARTH EXCAVATION (ADJUSTED)	EMBANKMENT	EARTHWORK BALANCE		REMARKS
							EXCAVATION REQUIRED TO COMPLETE	EXCESS EXCAVATION	
STA	TO	STA	CU YD	%	CU YD	CU YD	CU YD	CU YD	
957+21.0 LT		958+12.0 LT	70	25	53	35		18	US 45 PRE-STAGE I
956+63.0 RT		957+00.0 RT	10	25	7	20	13		US 45 PRE-STAGE I
952+49.0 LT		954+05.0 LT	30	25	23	30	7		US 45 STAGE I
954+99.0 LT		957+21.0 LT	300	25	225	25		200	US 45 STAGE I
952+06.2 RT		954+05.0 RT	30	25	23	45	22		US 45 STAGE II
954+99.0 RT		956+63.0 RT	35	25	26	25		1	US 45 STAGE II
		TOTALS	475						

SEEDING SCHEDULE

LOCATION	SEEDING, CLASS 2	SEEDING, CLASS 7	NITROGEN FERTILIZER NUTRIENT	PHOSPHORUS FERTILIZER NUTRIENT	POTASSIUM FERTILIZER NUTRIENT	AGRICULTURAL GROUND LIMESTONE	MULCH, METHOD 2
	ACRE	ACRE	POUND	POUND	POUND	TON	ACRE
STA 951+42.0 TO 954+05.0 RT	0.08	0.08	7.2	7.2	7.2	0.16	0.16
STA 954+99.0 TO 955+23.0 RT	0.02	0.02	1.8	1.8	1.8	0.04	0.04
STA 955+23.0 TO 956+73.0 RT	0.06	0.06	5.4	5.4	5.4	0.12	0.12
STA 956+97.0 TO 957+30.0 RT	0.02	0.02	1.8	1.8	1.8	0.04	0.04
STA 952+42.0 TO 952+70.7 LT	0.01	0.01	0.9	0.9	0.9	0.02	0.02
STA 952+70.7 TO 954+05.0 LT	0.04	0.04	3.6	3.6	3.6	0.08	0.08
STA 954+99.0 TO 955+50.0 LT	0.05	0.05	4.5	4.5	4.5	0.10	0.10
STA 955+50.0 TO 957+36.0 LT	0.15	0.15	13.5	13.5	13.5	0.30	0.30
STA 957+60.0 TO 958+25.0 LT	0.07	0.07	6.3	6.3	6.3	0.14	0.14
TOTALS	0.50	0.50	45	45	45	1.0	1.00

EROSION CONTROL SCHEDULE

LOCATION	EROSION CONTROL BLANKET	TEMPORARY EROSION CONTROL SEEDING	TEMPORARY DITCH CHECKS	INLET AND PIPE PROTECTION	PERIMETER EROSION BARRIER
	SQ YD	POUND	FOOT	EACH	FOOT
STA 951+42.0 TO 954+05.0 RT	385	16			267
STA 952+42.0 TO 952+70.7 LT	35	2			
STA 952+42.0 TO 954+05.0 LT					164
STA 952+70.7 TO 954+05.0 LT	187	8			
STA 954+88 LT			11		
STA 954+99.0 TO 955+23.0 RT	54	4			
STA 954+99.0 TO 955+50.0 LT	174	10			
STA 954+99.0 TO 956+73.0 RT					174
STA 955+01 LT			10		
STA 955+23.0 TO 956+73.0 RT	260	12			
STA 955+29 LT			12		
STA 955+50.0 TO 957+36.0 LT	685	30			
STA 956+95 LT			14		
STA 956+97.0 TO 957+30.0 RT	102	4			
STA 957+60.0 TO 958+25.0 LT	266	14			
STA 957+72 LT				1	
STA 958+05 LT			16		
TOTALS	2148	100	63	1	605

PAVEMENT MARKING SCHEDULE

LOCATION	DESCRIPTION	MODIFIED URETHANE PAVEMENT MARKING - LINE 4"		SHORT TERM PAVEMENT MARKING		SHORT TERM PAVEMENT MARKING REMOVAL	TEMPORARY PAVEMENT MARKING - LINE 4" - PAINT		PAVEMENT MARKING REMOVAL - GRINDING	RAISED REFLECTIVE PAVEMENT MARKER REMOVAL
		FOOT		FOOT		SQ FT	FOOT		SQ FT	EACH
		WHITE	YELLOW	WHITE	YELLOW		WHITE	YELLOW		
STAGE I										
US 45 STA 950+73.00 TO 952+58.40	CENTERLINE								17	
US 45 STA 952+68.00 TO 956+36.00 RT	EDGE LINE								123	
US 45 STA 953+00.00 TO 953+65.00	CENTERLINE									1
US 45 STA 955+38.00 TO 956+00.00	CENTERLINE									1
US 45 STA 956+45.60 TO 958+32.00	CENTERLINE								17	
STAGE II										
US 45 STA 952+71.00 TO 953+70.85 LT	EDGE LINE								34	
US 45 STA 955+33.15 TO 956+33.00 LT	EDGE LINE								34	
POST STAGE II										
US 45 STA 950+73.00 TO 958+32.00	CENTERLINE		190		76	26		190	63	
US 45 STA 952+68.00 TO 956+36.00 RT	EDGE LINE	368		8		3	368		123	
US 45 STA 952+71.00 TO 956+33.00 LT	EDGE LINE	362		8		3	362		121	
	SUBTOTALS	730	190	16	76		730	190		
	TOTALS	920		92		32	920		532	2

PRECAST BOX CULVERT SCHEDULE (ASTM C 1577)

STATION	SIZE (SPAN X HEIGHT)	LENGTH	SKEW	DESIGN FILL		PGE BACKFILL REQUIRED	PRECAST BOX CULVERT END SECTION
				MINIMUM	MAXIMUM		
	FOOT	FOOT		FOOT	FOOT	CU YD	EACH
STA 957+48 LT FE	3 X 3	36	NONE	0.67	1.33	50	2

MODEL: PLOT01
FILE NAME: Y:\IDOT\1359-13_78833\CADD\Highway\CADD Sheets\0978833-sht-scnecs(k-01).dgn

ESCA CONSULTANTS, INC.

USER NAME = IRC	DESIGNED - IRC	REVISED -	
ESCA PROJECT NO. 1359.13	DRAWN - IRC	REVISED -	
PLOT SCALE = 0.1667 ' / in.	CHECKED - ELH	REVISED -	
PLOT DATE = 8/9/2024	DATE - 08/24	REVISED -	

STATE OF ILLINOIS
DEPARTMENT OF TRANSPORTATION

SCHEDULES OF QUANTITIES

SCALE: NONE | SHEET NO. 1 OF 2 SHEETS | STA. | TO STA.

F.A.P. RTE.	SECTION	COUNTY	TOTAL SHEETS	SHEET NO.
328	105B-3	WHITE	71	16

CONTRACT NO. 78833

ILLINOIS | FED. AID PROJECT

SHOULDER SCHEDULE

LOCATION	PORTLAND CEMENT CONCRETE SHOULDERS 10"	PROTECTIVE COAT	TIE BARS 3/4"	PAVED SHOULDER REMOVAL	HOT-MIX ASPHALT SHOULDERS	BITUMINOUS MATERIALS (TACK COAT)
	SQ YD	SQ YD	EACH	SQ YD	TON	POUND
PRE-STAGE I						
STA 952+44.00 TO 954+06.80 RT	60	60				
STA 954+98.80 TO 956+60.00 RT	60	60				
STAGE I						
STA 952+49.00 TO 954+01.00 LT	86	86				
STA 953+70.85 TO 953+85.85 LT			4			
STA 955+03.00 TO 956+97.80 LT	121	121				
STA 955+18.15 TO 955+33.15 LT			4			
STAGE II						
STA 953+70.85 TO 954+06.80 RT				13		
STA 954+98.80 TO 955+33.15 RT				13		
STA 952+06.20 TO 954+01.00 RT					43	309
STA 955+03.00 TO 956+28.63 RT					25	204
TOTALS	327	327	8	26	68	513

PAVING SCHEDULE

LOCATION	HOT-MIX ASPHALT SURFACE COURSE, IL-9.5, MIX "C", N70	BITUMINOUS MATERIALS (TACK COAT)	HOT-MIX ASPHALT SURFACE REMOVAL - BUTT JOINT	TEMPORARY RAMP
	TON	POUND	SQ YD	SQ YD
STA 953+00.00 TO 953+70.85	23	93	189	29
STA 955+33.15 TO 956+00.00	22	87	181	29
TOTALS	45	180	370	58

GUARDRAIL SCHEDULE

LOCATION	GUARDRAIL REMOVAL	STEEL PLATE BEAM GUARDRAIL, TYPE A, 6 FOOT POSTS	TRAFFIC BARRIER TERMINAL, TYPE 6	TRAFFIC BARRIER TERMINAL, TYPE 1 (SPECIAL) TANGENT	TERMINAL MARKER - DIRECT APPLIED	GUARDRAIL REFLECTORS, TYPE A
	FOOT	FOOT	EACH	EACH	EACH	EACH
STA 951+43.46 TO 954+06.80 RT	264					
STA 952+43.40 TO 954+06.80 LT	164					
STA 954+98.80 TO 955+12.77 RT	14					
STA 954+98.80 TO 955+12.95 LT	14					
STA 952+26.60 TO 954+01.00 RT		87.5	1	1	1	3
STA 952+89.10 TO 954+01.00 LT		25	1	1	1	2
STA 955+03.00 TO 956+14.90 RT		25	1	1	1	2
STA 955+03.00 TO 956+77.40 LT		87.5	1	1	1	3
TOTALS	456	225	4	4	4	10

PCC PAVEMENT SCHEDULE

LOCATION	PAVEMENT CONNECTOR (PCC) FOR BRIDGE APPROACH SLAB	PROTECTIVE COAT	WELDED WIRE REINFORCEMENT
	SQ YD	SQ YD	SQ YD
STAGE I			
STA 953+70.85 TO 953+85.85 LT	27	27	27
STA 955+18.15 TO 955+33.15 LT	27	27	27
STAGE II			
STA 953+70.85 TO 953+85.85 RT	28	28	28
STA 955+18.15 TO 955+33.15 RT	28	28	28
TOTALS	110	110	110

DRAINAGE SCHEDULE

LOCATION	BOX CULVERT REMOVAL
	FOOT
STA 955+22.00 LT FE	20
TOTAL	20

INCIDENTAL HMA SCHEDULE

LOCATION	INCIDENTAL HOT-MIX ASPHALT SURFACING	AGGREGATE BASE COURSE, TYPE B 8"	BITUMINOUS MATERIALS (TACK COAT)
	TON	SQ YD	POUND
STA 956+85.00 RT FE	2.5	22.5	46
STA 957+48.00 LT FE	2.5	22.5	46
TOTALS	5	45	92

REMOVAL SCHEDULE

LOCATION	PAVEMENT REMOVAL	PAVED SHOULDER REMOVAL
	SQ YD	SQ YD
PRE-STAGE I		
STA 953+98.50 TO 954+06.80 RT		1
STA 954+98.80 TO 955+00.00 RT		0.5
STAGE I		
STA 953+70.85 TO 954+28.75 LT	92	
STA 953+98.00 TO 954+06.80 LT		1.5
STA 954+76.90 TO 955+33.15 LT	90	
STA 954+98.80 TO 955+04.50 LT		1
STAGE II		
STA 953+70.85 TO 954+28.75 RT	77	
STA 954+76.90 TO 955+33.15 RT	76	
TOTALS	335	4

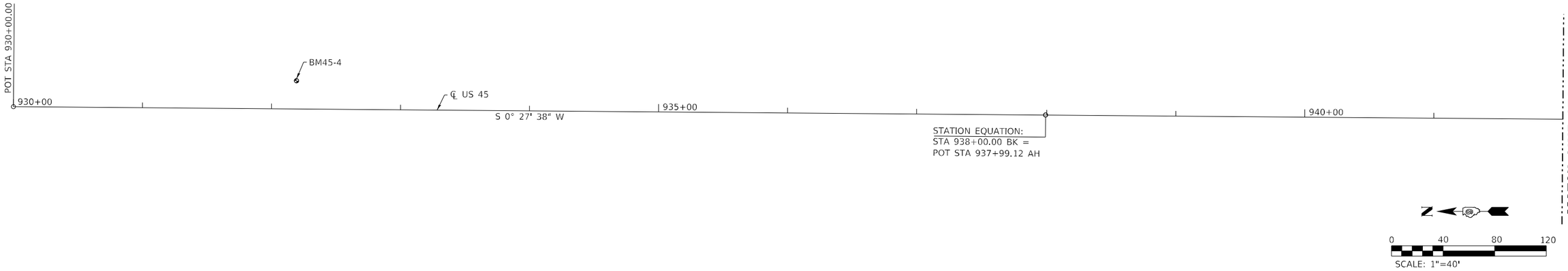

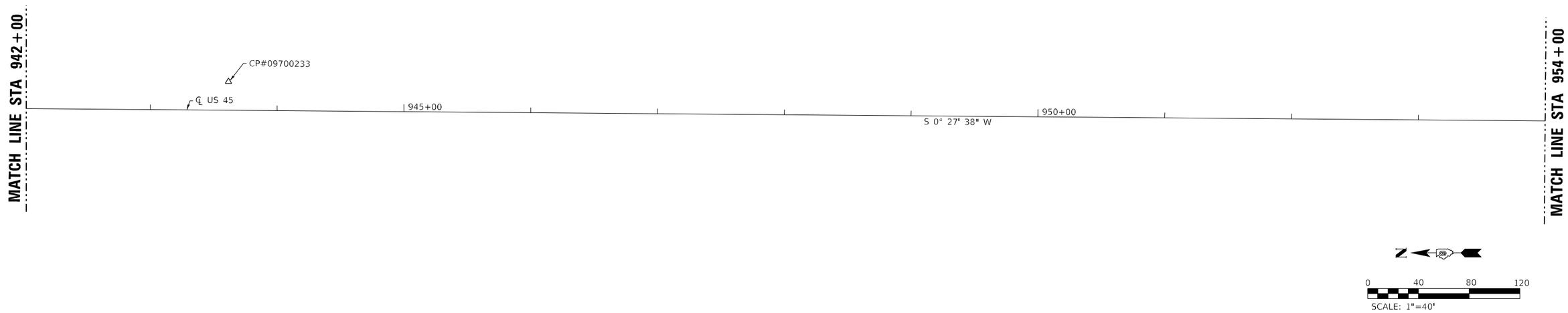

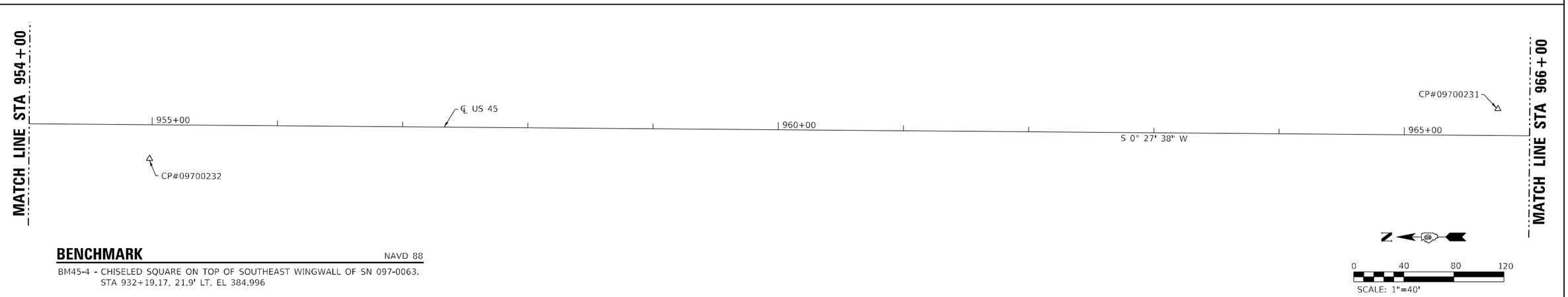

BENCHMARK

NAVD 88

BM45-4 - CHISELED SQUARE ON TOP OF SOUTHEAST WINGWALL OF SN 097-0063.
STA 932+19.17, 21.9' LT, EL 384.996

MODEL: PLOT
FILE NAME: YIDOT\13-39-13_78833\CADD\Highway\CADD Sheets\0978833-sht-ga01.dgn

ESCA CONSULTANTS, INC.

USER NAME = IRC	DESIGNED - IRC	REVISED -	
ESCA PROJECT NO. 1359.13	DRAWN - ZTC	REVISED -	
PLOT SCALE = 0.1667 ' / in.	CHECKED - IRC	REVISED -	
PLOT DATE = 8/9/2024	DATE - 10/23	REVISED -	

STATE OF ILLINOIS
DEPARTMENT OF TRANSPORTATION

ALIGNMENT, TIES & BENCHMARKS

SCALE: 1"=40' | SHEET NO. 1 OF 2 SHEETS | STA. 930+00.00 TO STA. 966+00.00

F.A.P. RTE.	SECTION	COUNTY	TOTAL SHEETS	SHEET NO.
328	105B-3	WHITE	71	18
		CONTRACT NO. 78833		
		ILLINOIS FED. AID PROJECT		

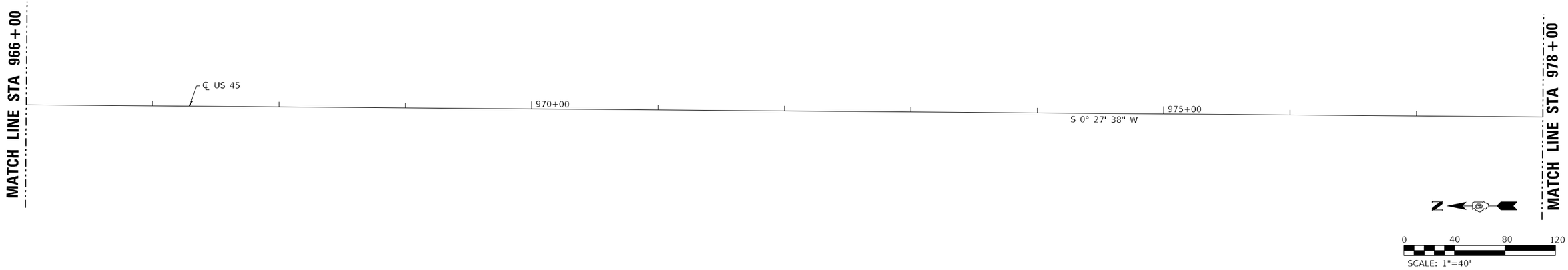

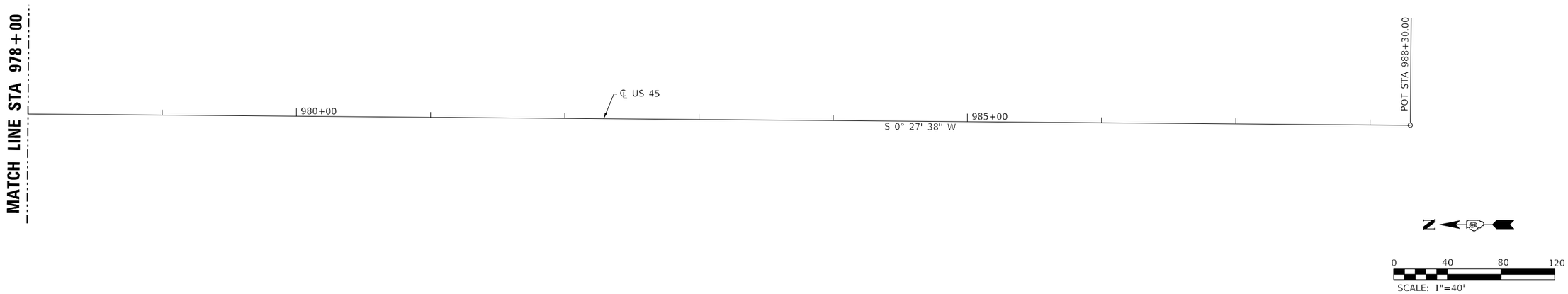

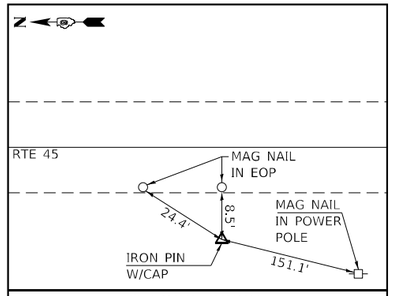

CP#09700231

STA 965+74.16, 21.4' RT, ℄ RTE 45
N = 530447.451 E = 983330.695

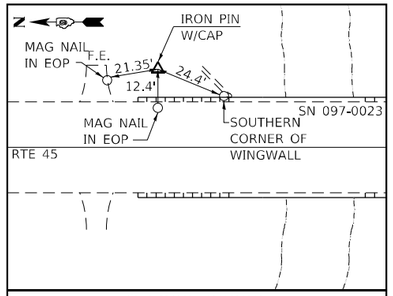

CP#09700232

STA 954+97.65, 27.1' LT, ℄ RTE 45
N = 531524.319 E = 983290.794

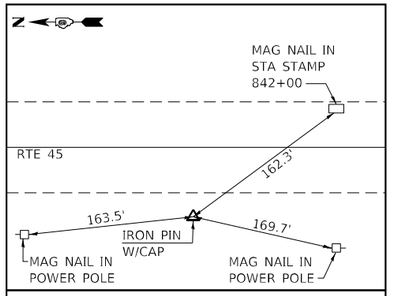

CP#09700233

STA 943+61.04, 22.7' RT, ℄ RTE 45
N = 532660.488 E = 983349.723

MODEL: PLOT
FILE NAME: Y:\IDOT\13359-13_78833\CADD\Highway\CADD Sheets\0978833-sht-aln02.dgn

ESCA CONSULTANTS, INC.	USER NAME = IRC	DESIGNED - IRC	REVISED -	STATE OF ILLINOIS DEPARTMENT OF TRANSPORTATION	ALIGNMENT, TIES & BENCHMARKS	F.A.P. RTE.	SECTION	COUNTY	TOTAL SHEETS / SHEET NO.
	ESCA PROJECT NO. 1359.13	DRAWN - ZTC	REVISED -			328	105B-3	WHITE	71 / 19
	PLOT SCALE = 0.1667 ' / in.	CHECKED - IRC	REVISED -					CONTRACT NO. 78833	
	PLOT DATE = 8/9/2024	DATE - 10/23	REVISED -		SCALE: 1"=40' SHEET NO. 2 OF 2 SHEETS STA. 966+00.00 TO STA. 988+30.00			ILLINOIS FED. AID PROJECT	

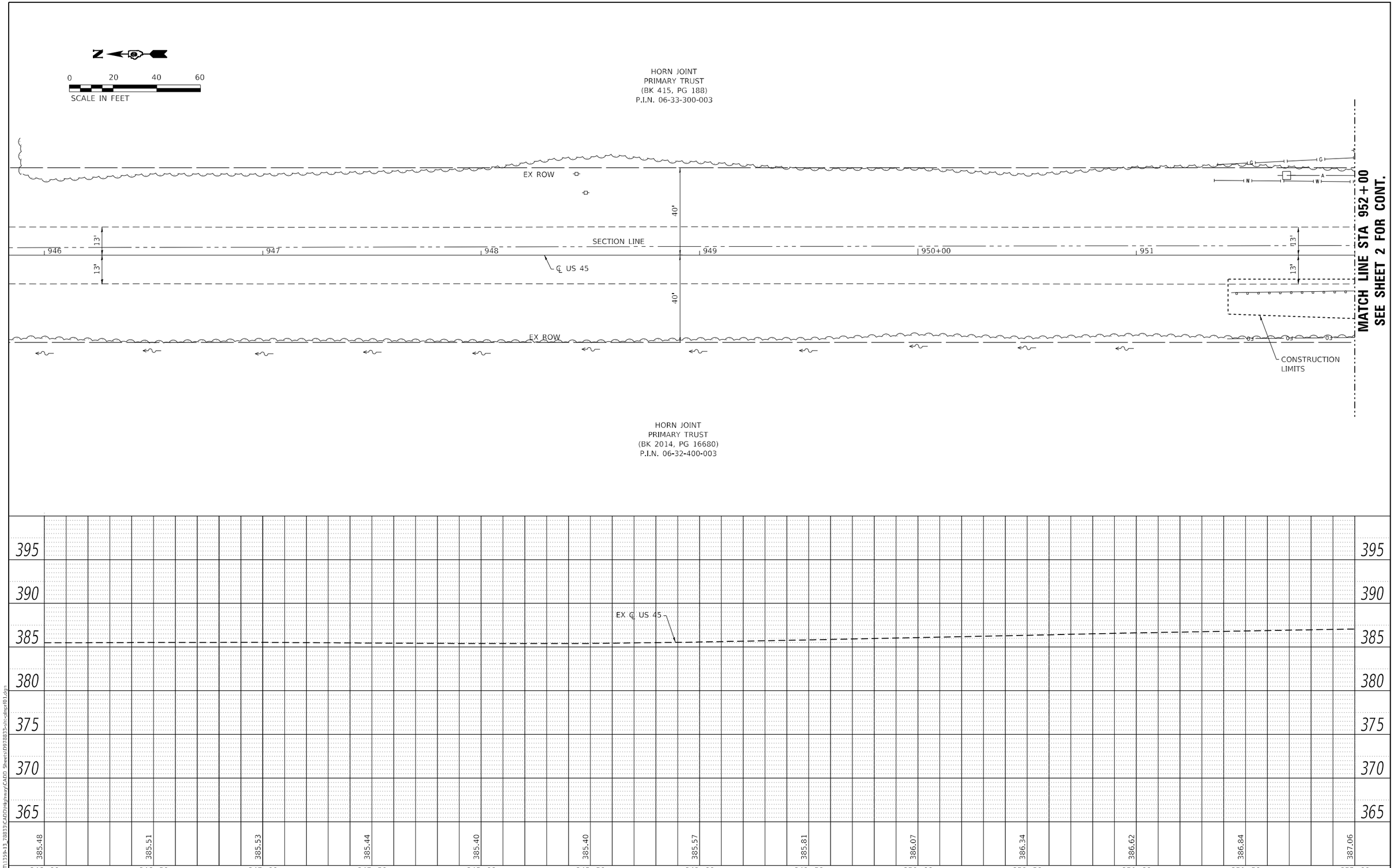

PLAN
SURVEYED
PLOTTED
ALIGNMENT CHECKED
R/ OF WAY CHECKED
CADD FILE NAME
NOTE BOOK NO.
BY
DATE

PROFILE
SURVEYED
PLOTTED
GRADES CHECKED
S.A.N. NOTED
STRUCTURE NOTATIONS CHKD
NOTE BOOK NO.
BY
DATE

MODEL: Default
FILE NAME: Y:\IDOT\1359-13_78833\CADD\Highway\CADD Sheets\0978833-sht-plan01.dgn

ESCA CONSULTANTS, INC.

USER NAME = IRC	DESIGNED - ATN	REVISED -
ESCA PROJECT NO. 1359.13	DRAWN - JPC	REVISED -
PLOT SCALE = 40.0000 ' / in.	CHECKED - ELH	REVISED -
PLOT DATE = 12/16/2024	DATE - 08/24	REVISED -

STATE OF ILLINOIS
DEPARTMENT OF TRANSPORTATION

US 45 PLAN AND PROFILE

SCALE: AS SHOWN | SHEET NO. 1 OF 3 SHEETS | STA. 946+00.00 TO STA. 952+00.00

F.A.P. RTE.	SECTION	COUNTY	TOTAL SHEETS	SHEET NO.
328	105B-3	WHITE	71	20

CONTRACT NO. 78833

ILLINOIS | FED. AID PROJECT

LEGEND

- HMA SHOULDERS
- PCC SHOULDERS 10"
- 2" INCIDENTAL HMA SURFACING

0 20 40 60
SCALE IN FEET

MATCH LINE STA 952+00
SEE SHEET 1 FOR CONT.

MATCH LINE STA 958+00
SEE SHEET 3 FOR CONT.

TBT TY 1 SPL (TAN) | 25' SPBGR TY A 6' POSTS | TBT TY 6

TBT TY 6 | 87.5' SPBGR TY A 6' POSTS | TBT TY 1 SPL (TAN)

HORN JOINT PRIMARY TRUST (BK 415, PG 188) P.I.N. 06-33-300-003

HORN JOINT PRIMARY TRUST (BK 2014, PG 16680) P.I.N. 06-32-400-003

STA 954+52.00 ℄ SN 097-0023 (NO SKEW) & PR STRUCTURE (NO SKEW)

36' PRECAST CONCRETE BOX CULVERTS 3'X3' WITH END SECTIONS; ASTM C 1577; NO SKEW; DESIGN FILL: 0.67'-1.33'

BLON STA 953+01.60 | BLON STA 956+64.90 | BLON STA 952+39.10 | BLON STA 956+02.40

STA 955+22.00 FE (AGG) | STA 957+48 RELOCATED FE 24' (AGG) | STA 955+24.00 FE (AGG) | STA 956+85 RELOCATED FE 24' (AGG)

+49.00 | +70.70 | +79.10 20.2' LT | +39.10 | +64.10 | +39.90 | +27.40 | +87.40 20.2' LT | +97.80 | +06.20 | +16.60 20.2' RT | +44.00 | +70.85 | +76.60 | +33.15 | +64.90 | +24.90 20.2' RT | +28.63 | +60.00

PR ROW | EX ROW | PR T.E.

SECTION LINE

952 | 953 | 954 | 955+00 | 956 | 957

PROJECT BEGINS BUTT JOINT STA 953+00.00

PROJECT ENDS BUTT JOINT STA 956+00.00

℄ US 45

CONSTRUCTION LIMITS

EDGE OF WATER AT TIME OF SURVEY

LOST CREEK

TRAVERSE POINT 9700232 ALONG US 45 AT STA 954+97.6, 27.1 RT

40' | 3'-0" | 2:1 | 6'-0" | 13' | 16' | 3'-4" | 2'-0" | 2'-8"

69.50' TAPER | 165' VERTICAL CURVE | 65.50' TAPER

STA 953+00.00 MATCH EXISTING EL 387.36

VPC STA 953+69.50 EL 387.54

VPI STA 954+52.00 EL 387.95

VPT STA 955+34.50 EL 387.54

STA 956+00.00 MATCH EXISTING EL 387.36

PR ℄ US 45 | EX ℄ US 45

+0.259% | +0.50% | -0.50% | -0.275%

D.H.W.E. 383.8

PROPOSED LT DITCH @ 2.50% | PROPOSED LT DITCH @ 0.58% | PROPOSED LT DITCH @ 0.94% | PROPOSED LT DITCH @ 1.15%

EX LT DITCH FLOWLINE | EX RT DITCH FLOWLINE

+50.00 EL 379.90 | +05.15 EL 378.78 | +50.00 EL 380.48 | +94.90 EL 380.54

(EX ℄ US 45) (PR ℄ US 45)

395 | 390 | 385 | 380 | 375 | 370 | 365

387.06 | 387.26 | 387.36 387.36 | 387.40 387.49 | 387.42 387.66 | 387.45 387.75 | 387.39 387.68 | 387.41 387.50 | 387.36 387.36 | 387.20 | 386.98 | 386.87 | 386.96

952+00 | 952+50 | 953+00 | 953+50 | 954+00 | 954+50 | 955+00 | 955+50 | 956+00 | 956+50 | 957+00 | 957+50 | 958+00

PLAN		BY	DATE
SURVEYED			
PLOTTED			
ROUTE SURVEY CHECKED			
R/W CHECKED			
NOTE BOOK	CADD FILE NAME		
NO.			

PROFILE		BY	DATE
SURVEYED			
PLOTTED			
GRADES CHECKED			
B.M. NOTED			
NOTE BOOK	STRUCTURE NOTATIONS CLRKD		
NO.			

MODEL: Default
FILE NAME: Y:\IDOT\1359-13_78833\CADD\Highway\CADD Sheets\D978833-sht-dhpt01.dgn

ESCA CONSULTANTS, INC.

USER NAME = IRC	DESIGNED - ATN/IRC	REVISED -	
ESCA PROJECT NO. 1359.13	DRAWN - JPC/KAH/ATN/IRC	REVISED -	
PLOT SCALE = 40.0000 ' / in.	CHECKED - ELH	REVISED -	
PLOT DATE = 12/16/2024	DATE - 08/24	REVISED -	

STATE OF ILLINOIS
DEPARTMENT OF TRANSPORTATION

US 45 PLAN AND PROFILE

SCALE: AS SHOWN | SHEET NO. 2 OF 3 SHEETS | STA. 952+00.00 TO STA. 958+00.00

F.A.P. RTE.	SECTION	COUNTY	TOTAL SHEETS	SHEET NO.
328	105B-3	WHITE	71	21

CONTRACT NO. 78833

ILLINOIS | FED. AID PROJECT

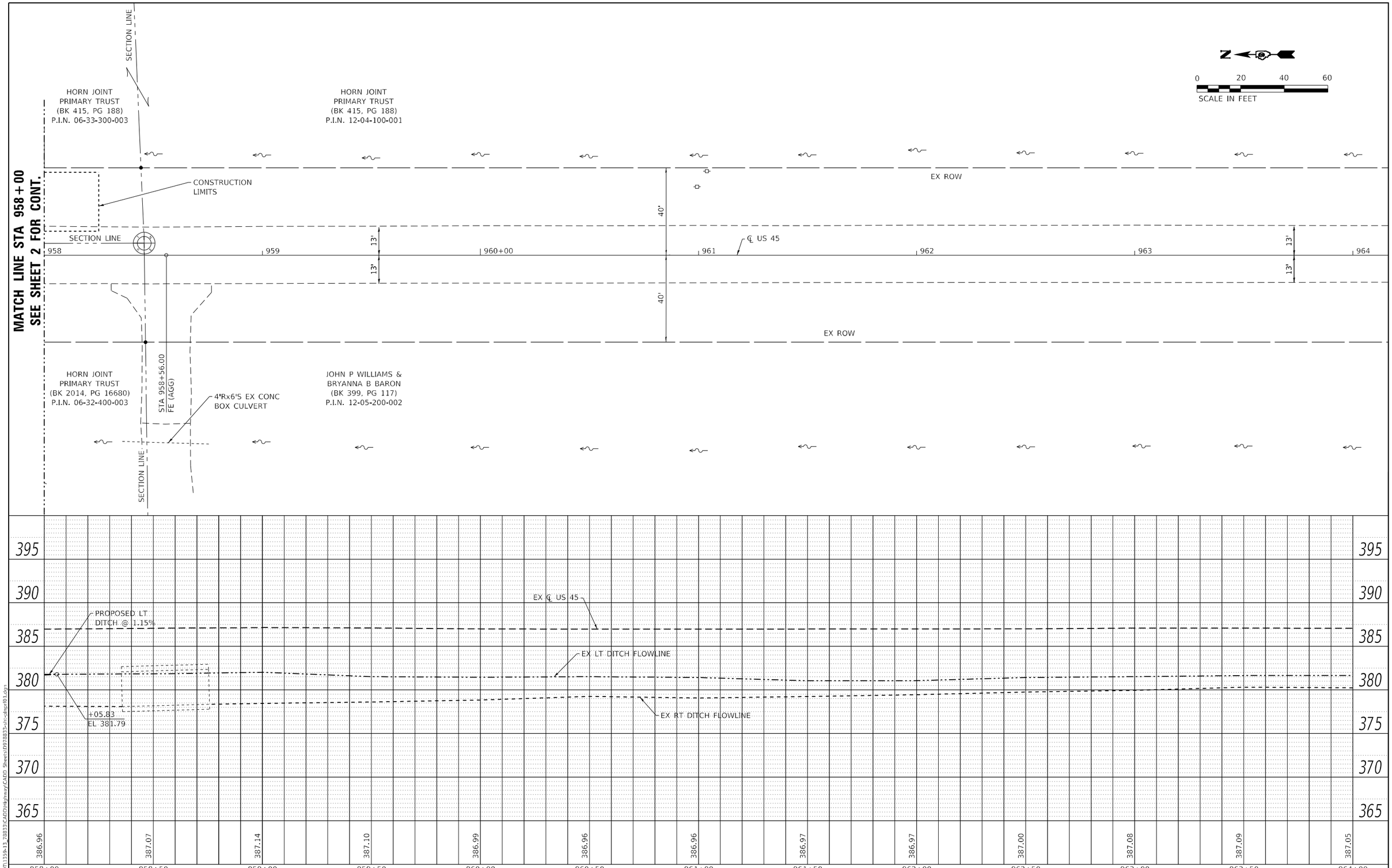

0 20 40 60
SCALE IN FEET

PLAN	BY	DATE
SURVEYED		
PLOTTED		
ALIGNMENT CHECKED		
R/W CHECKED		
NOTE BOOK NO.		
CADD FILE NAME		

PROFILE	BY	DATE
SURVEYED		
PLOTTED		
GRADES CHECKED		
BLDG. NOTED		
NOTE BOOK NO.	STRUCTURE NOTATNS CHKD	

MODEL: Default
FILE NAME: Y:\IDOT\1339-13_78833\CADD\Highway\CADD Sheets\D978833-sht-dhwy01.dgn

ESCA CONSULTANTS, INC.

USER NAME = IRC	DESIGNED - ATN	REVISED -
ESCA PROJECT NO. 1359.13	DRAWN - JPC	REVISED -
PLOT SCALE = 40.0000 ' / in.	CHECKED - ELH	REVISED -
PLOT DATE = 12/16/2024	DATE - 08/24	REVISED -

STATE OF ILLINOIS
DEPARTMENT OF TRANSPORTATION

US 45 PLAN AND PROFILE

SCALE: AS SHOWN | SHEET NO. 3 OF 3 SHEETS | STA. 958+00.00 TO STA. 964+00.00

F.A.P. RTE.	SECTION	COUNTY	TOTAL SHEETS	SHEET NO.
328	105B-3	WHITE	71	22

CONTRACT NO. 78833

ILLINOIS | FED. AID PROJECT

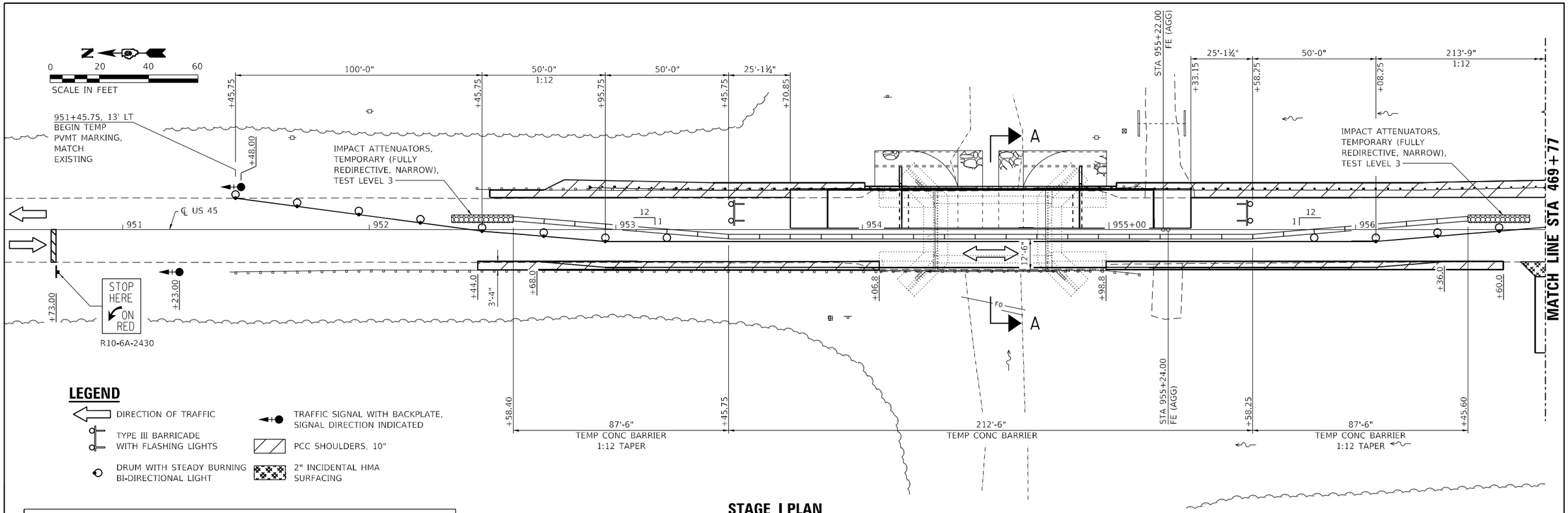

LEGEND

- DIRECTION OF TRAFFIC
- TYPE III BARRICADE WITH FLASHING LIGHTS
- DRUM WITH STEADY BURNING BI-DIRECTIONAL LIGHT
- TRAFFIC SIGNAL WITH BACKPLATE, SIGNAL DIRECTION INDICATED
- PCC SHOULDERS, 10"
- 2" INCIDENTAL HMA SURFACING

STAGE I PLAN

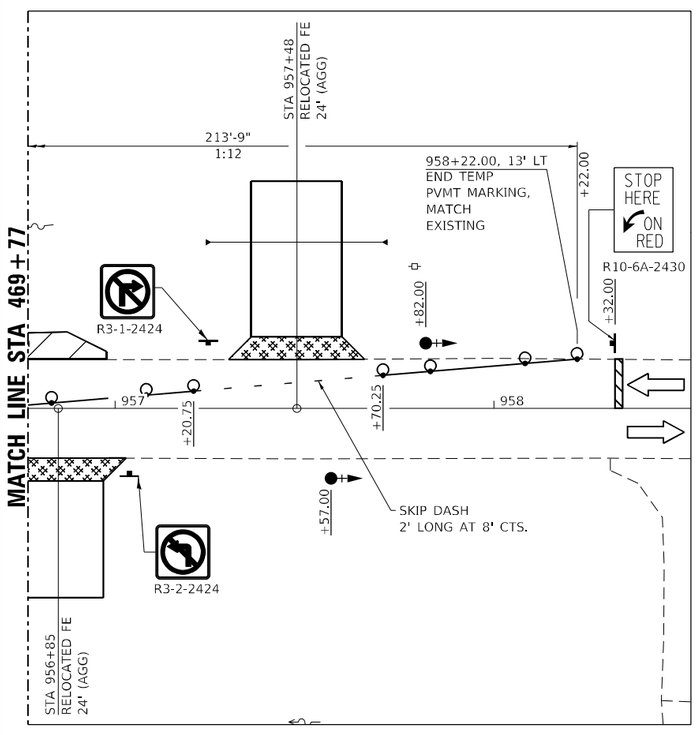

STAGE I
SCHEDULE OF QUANTITIES

TEMPORARY CONCRETE BARRIER

STATION, O/S	TO	STATION, O/S	FEET
952+58.40, 5.3' LT		953+45.75, 1.9375' RT	87.5'
953+45.75, 1.9375' RT		955+58.25, 1.9375' RT	212.5'
955+58.25, 1.9375' RT		956+45.60, 5.3' LT	87.5'
		STAGE I TOTAL	387.5'

IMPACT ATTENUATORS, TEMPORARY (FULLY REDIRECTIVE, NARROW), TEST LEVEL 3 - 2 EACH

PINNING TEMPORARY CONCRETE BARRIER

STATION	TO	STATION	TYPE	EACH
953+70.75		955+33.25	CONTINUOUS	39
953+45.75		953+70.75	TRANSITION	3
955+33.25		955+58.25	TRANSITION	3
			STAGE I TOTAL	45

GENERAL NOTES

1. THE PRE-STAGE I CONSTRUCTION SHALL INCLUDE THE PCC SHOULDERS ALONG THE SOUTHBOUND LANE AS WELL AS PROPOSED FIELD ENTRANCES AS SHOWN ON THIS SHEET (PRIOR TO PLACING THE TEMPORARY CONCRETE BARRIER).
2. CONSTRUCT THREE RUMBLE STRIPS IN EACH DIRECTION ON US 45.
3. ALL TRAFFIC SIGNALS SHOWN ARE INCLUDED IN TEMPORARY BRIDGE TRAFFIC SIGNALS - 1 EACH.
4. TEMPORARY BRIDGE TRAFFIC SIGNALS SHALL BE A 2-PHASE SIGNAL.
5. ADVANCE WIDTH RESTRICTION WARNING SHALL BE INCLUDED IN THE COST OF STANDARD 701321.
6. THE DIMENSION SHOWN ON THE WIDTH RESTRICTION SIGN (W12-I102(0)-48) SHOWN ON STANDARD 701321 AND ON THE ADVANCE WARNING SIGN (W12-I103) SHOWN ON THE FOLLOWING SHEET SHALL BE 11'-0" FOR STAGE I CONSTRUCTION.
7. ANY TIME THE CONCRETE BARRIER IS NOT IN THE PROPER POSITION, FLAGGERS SHALL BE IN PLACE TO CONTROL TRAFFIC, THE TEMPORARY TRAFFIC SIGNALS SHALL BE SET TO FLASH ALL RED.
8. THE CENTERLINE PAVEMENT MARKING SHALL BE REMOVED FROM THE STOP BAR TO THE IMPACT ATTENUATORS.
9. THE STAGE I CONSTRUCTION SHALL INCLUDE COMPLETION OF THE EARTHWORK, BOX CULVERTS, PAVEMENT CONNECTOR (PCC) FOR BRIDGE APPROACH SLAB, GUARDRAIL, AND PCC SHOULDERS AS REFERENCED ON THIS SHEET AND DESCRIBED IN DETAIL ON THE PLAN AND PROFILE SHEETS.
10. SEE HIGHWAY STANDARD 701321 FOR ADDITIONAL DETAILS. THE COST FOR ADDITIONAL ITEMS SHOWN ON THIS SHEET IS INCLUDED IN THE PRICE FOR TRAFFIC CONTROL AND PROTECTION, STANDARD 701321.

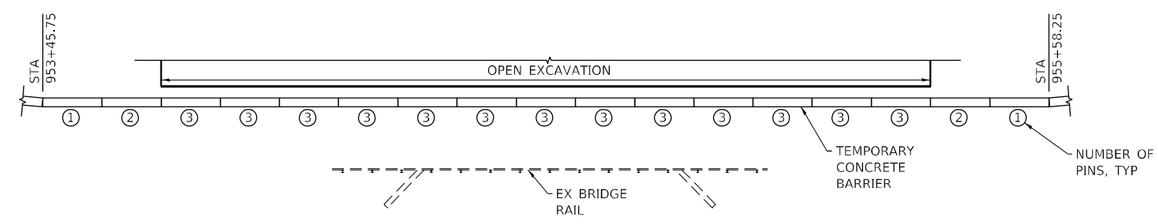

STAGE I PINNING PLAN

MODEL: PLOT
FILE NAME: Y:\IDOT\1359-13_78833\CADD\Highway\CADD Sheets\0978833-sht-staging01.dgn

ESCA CONSULTANTS, INC.	USER NAME = IRC	DESIGNED - IRC	REVISED -
	ESCA PROJECT NO. 1359.13	DRAWN - IRC	REVISED -
	PLOT SCALE = 0.1667 ' / in.	CHECKED - ELH	REVISED -
	PLOT DATE = 8/16/2024	DATE - 08/24	REVISED -

STATE OF ILLINOIS
DEPARTMENT OF TRANSPORTATION

PRE-STAGE I & STAGE I TRAFFIC CONTROL

SCALE: AS SHOWN | SHEET 1 OF 1 SHEETS | STA. 950+52.00 TO STA. 958+52.00

F.A.P. RTE.	SECTION	COUNTY	TOTAL SHEETS	SHEET NO.
328	105B-3	WHITE	71	23

CONTRACT NO. 78833

ILLINOIS | FED. AID PROJECT

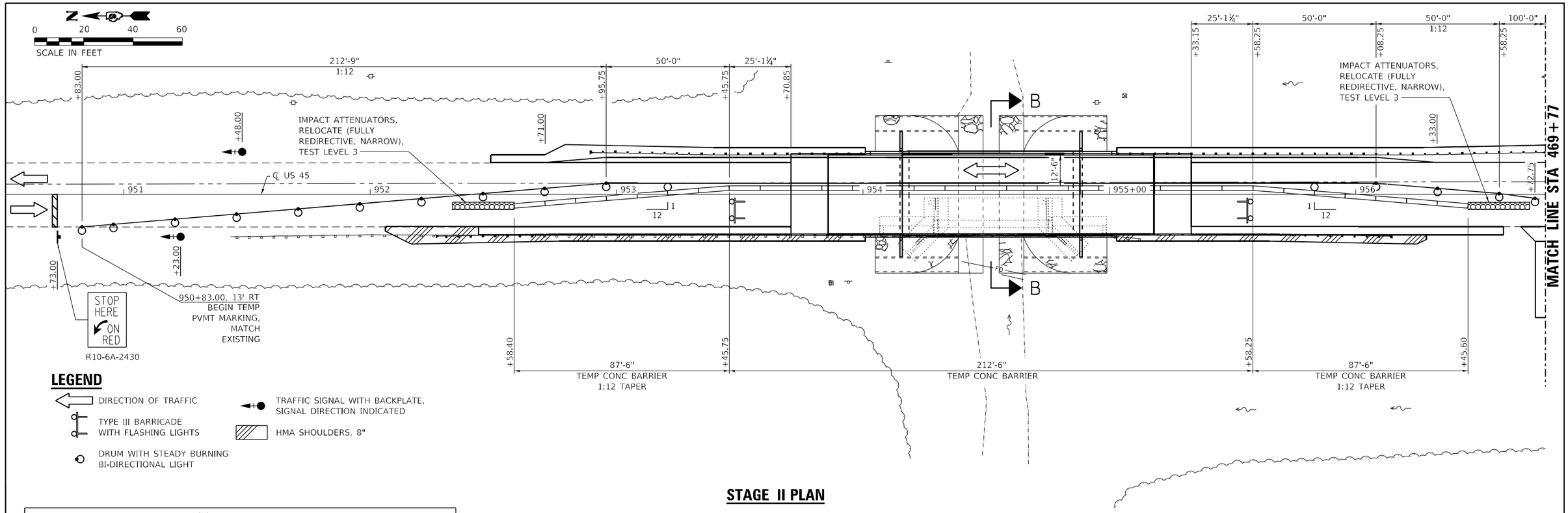

LEGEND

- DIRECTION OF TRAFFIC
- TYPE III BARRICADE WITH FLASHING LIGHTS
- DRUM WITH STEADY BURNING BI-DIRECTIONAL LIGHT
- TRAFFIC SIGNAL WITH BACKPLATE, SIGNAL DIRECTION INDICATED
- HMA SHOULDERS, 8"

STAGE II PLAN

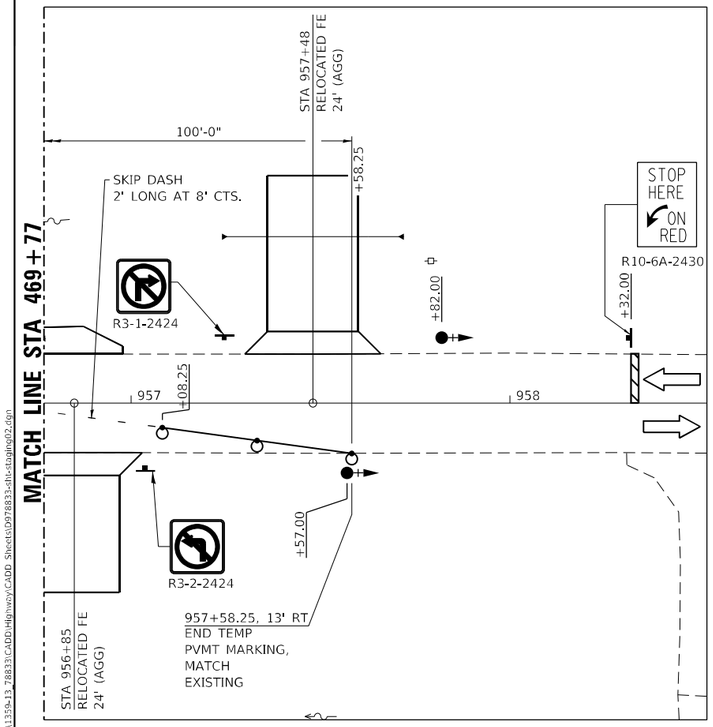

GENERAL NOTES

1. TEMPORARY BRIDGE TRAFFIC SIGNALS SHALL BE A 2-PHASE SIGNAL.
2. ADVANCE WIDTH RESTRICTION WARNING SHALL BE INCLUDED IN THE COST OF STANDARD 701321.
3. THE DIMENSION SHOWN ON THE WIDTH RESTRICTION SIGN (W12-I102(0)-48) SHOWN ON STANDARD 701321 AND ON THE ADVANCE WARNING SIGN (W12-I103) SHOWN ON THIS SHEET SHALL BE 11'-0" FOR STAGE II CONSTRUCTION.
4. ANY TIME THE CONCRETE BARRIER IS NOT IN THE PROPER POSITION, FLAGGERS SHALL BE IN PLACE TO CONTROL TRAFFIC, THE TEMPORARY TRAFFIC SIGNALS SHALL BE SET TO FLASH ALL RED.
5. THE STAGE II CONSTRUCTION SHALL INCLUDE COMPLETION OF THE EARTHWORK, PAVEMENT CONNECTOR (PCC) FOR BRIDGE APPROACH SLAB, GUARDRAIL, AND HMA SHOULDERS AS REFERENCED ON THIS SHEET AND DESCRIBED IN DETAIL ON THE PLAN AND PROFILE SHEETS.
6. SEE HIGHWAY STANDARD 701321 FOR ADDITIONAL DETAILS. THE COST FOR ADDITIONAL ITEMS SHOWN ON THIS SHEET IS INCLUDED IN THE PRICE FOR TRAFFIC CONTROL AND PROTECTION, STANDARD 701321.

STAGE II SCHEDULE OF QUANTITIES

RELOCATE TEMPORARY CONCRETE BARRIER

STATION, O/S	TO	STATION, O/S	FEET
952+58.40, 5.6' RT		953+45.75, 1.625' LT	87.5'
953+45.75, 1.625' LT		955+58.25, 1.625' LT	212.5'
955+58.25, 1.625' LT		956+45.60, 5.6' RT	87.5'
		STAGE II TOTAL	387.5'

IMPACT ATTENUATORS, RELOCATE (FULLY REDIRECTIVE, NARROW), TEST LEVEL 3 - 2 EACH

PINNING TEMPORARY CONCRETE BARRIER

STATION	TO	STATION	TYPE	EACH
953+70.75		953+85.85	CONTINUOUS	4
953+45.75		953+70.75	TRANSITION	3
955+33.25		955+58.25	TRANSITION	3
955+18.15		955+33.25	CONTINUOUS	4
			STAGE II TOTAL	14

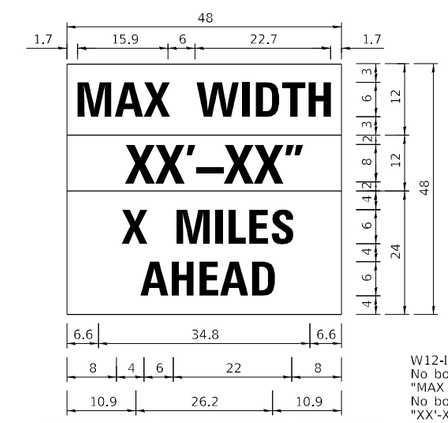

NOTE: THIS SIGN SHALL BE LOCATED AS DIRECTED BY THE ENGINEER. ONE SIGN SHALL BE PROVIDED FOR EACH APPROACH TO THE SITE.

W12–I103

W12-I103 (Width is 8D);
No border, Black on White;
"MAX WIDTH" D;
No border, Black on Orange;
"XX'-XX"" D;
No border, Black on White;
"X MILES" D; "AHEAD" D

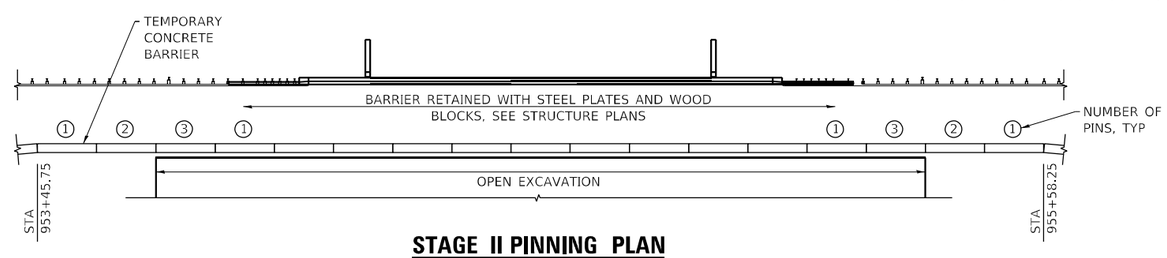

STAGE II PINNING PLAN

MODEL: PLOT
FILE NAME: Y:\IDOT\1359-13_78833\CADD\Highway\CADD Sheets\D978833-dht-staging02.dgn

ESCA CONSULTANTS, INC.

USER NAME = IRC	DESIGNED - IRC	REVISED -	
ESCA PROJECT NO. 1359.13	DRAWN - IRC	REVISED -	
PLOT SCALE = 0.1667 ' / in.	CHECKED - ELH	REVISED -	
PLOT DATE = 8/9/2024	DATE - 08/24	REVISED -	

STATE OF ILLINOIS
DEPARTMENT OF TRANSPORTATION

STAGE II TRAFFIC CONTROL

SCALE: AS SHOWN | SHEET 1 OF 1 SHEETS | STA. 950+52.00 TO STA. 958+52.00

F.A.P. RTE.	SECTION	COUNTY	TOTAL SHEETS	SHEET NO.
328	105B-3	WHITE	71	24

CONTRACT NO. 78833

ILLINOIS | FED. AID PROJECT

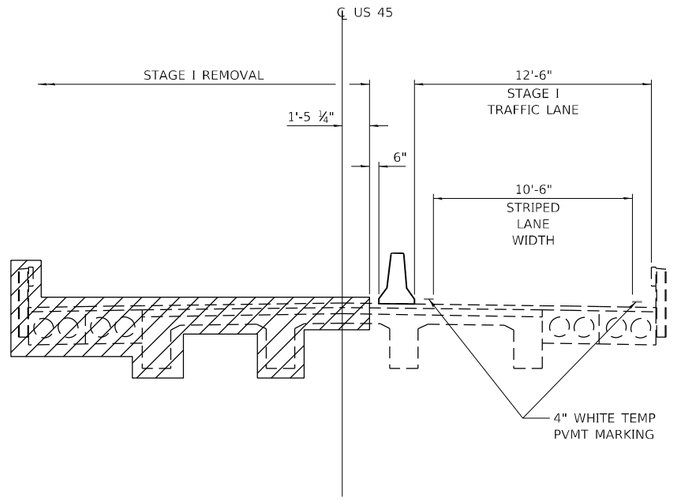

SECTION A–A
REMOVAL

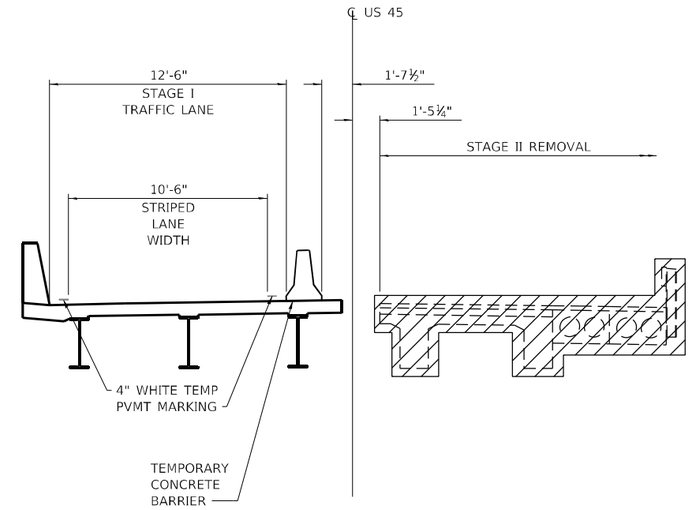

SECTION B–B
REMOVAL

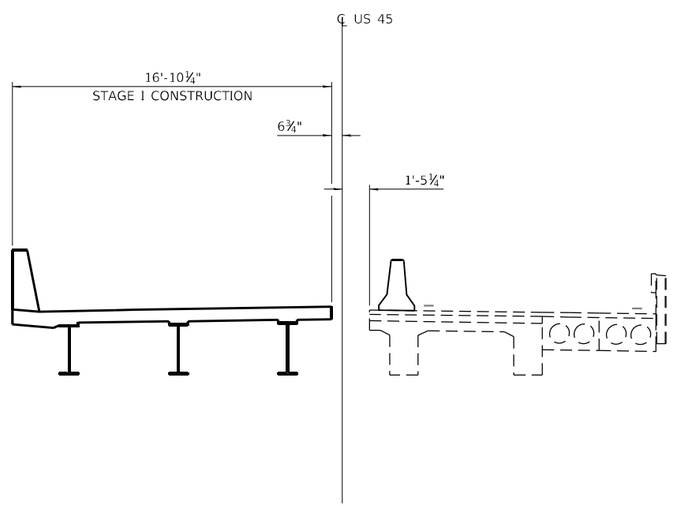

SECTION A–A
CONSTRUCTION

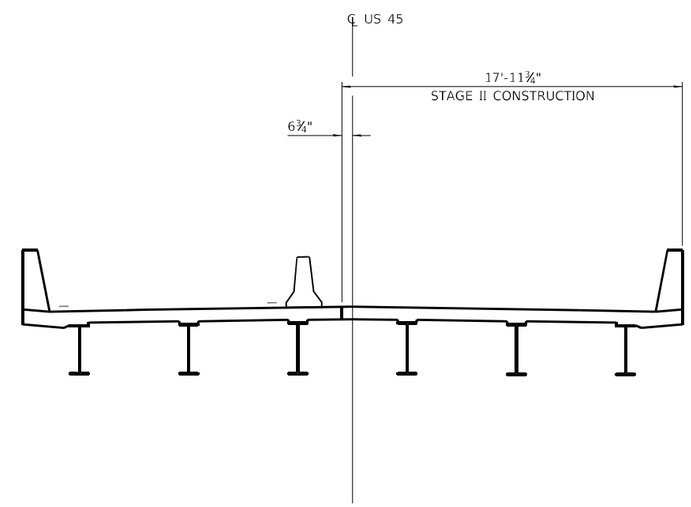

SECTION B–B
CONSTRUCTION

MODEL: PLOT
FILE NAME: Y:\IDOT\1359-13_78833\CADD\Hdg\wsy\CADD Sheets\0978833-sht-staging03.dgn

ESCA CONSULTANTS, INC.

USER NAME = IRC	DESIGNED - IRC	REVISED -
ESCA PROJECT NO. 1359.13	DRAWN - IRC	REVISED -
PLOT SCALE = 0.1667 ' / in.	CHECKED - ELH	REVISED -
PLOT DATE = 8/9/2024	DATE - 08/24	REVISED -

STATE OF ILLINOIS
DEPARTMENT OF TRANSPORTATION

STAGE CONSTRUCTION SECTIONS

SCALE: NONE | SHEET 1 OF 1 SHEETS | STA. TO STA.

F.A.P. RTE.	SECTION	COUNTY	TOTAL SHEETS	SHEET NO.
328	105B-3	WHITE	71	25

CONTRACT NO. 78833

ILLINOIS | FED. AID PROJECT

LEGEND

- EROSION CONTROL BLANKET
- CONSTRUCTION LIMITS
- TEMPORARY DITCH CHECK
- INLET AND PIPE PROTECTION
- PERIMETER EROSION BARRIER

0 25 50 75
SCALE IN FEET

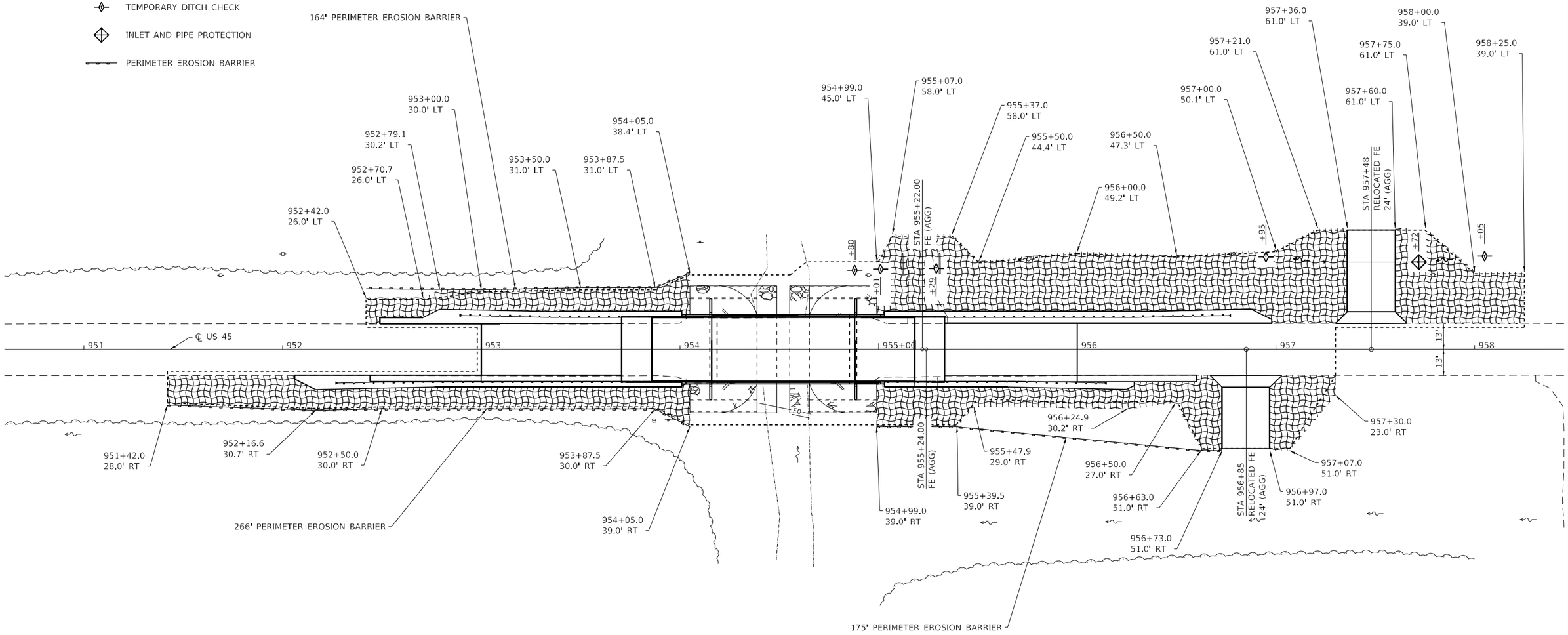

MODEL: Default
FILE NAME: Y:\IDOT\1359-13_78833\CADD\Highway\CADD Sheets\D978833-sht-eroo01.dgn

ESCA CONSULTANTS, INC.	USER NAME = IRC	DESIGNED - IRC	REVISED -	STATE OF ILLINOIS DEPARTMENT OF TRANSPORTATION	EROSION CONTROL PLAN
	ESCA PROJECT NO. 1359.13	DRAWN - IRC	REVISED -		
	PLOT SCALE = 40.0000 ' / in.	CHECKED - ELH	REVISED -		
	PLOT DATE = 8/9/2024	DATE - 04/24	REVISED -		

SCALE: AS SHOWN | SHEET 1 OF 1 SHEETS | STA. 950+60.00 TO STA. 958+45.00

F.A.P. RTE.	SECTION	COUNTY	TOTAL SHEETS	SHEET NO.
328	105B-3	WHITE	71	26

CONTRACT NO. 78833

ILLINOIS | FED. AID PROJECT

LEGEND

0 20 40 60
SCALE IN FEET

- PAVEMENT REMOVAL
- HOT-MIX ASPHALT SURFACE REMOVAL - BUTT JOINT
- PAVED SHOULDER REMOVAL

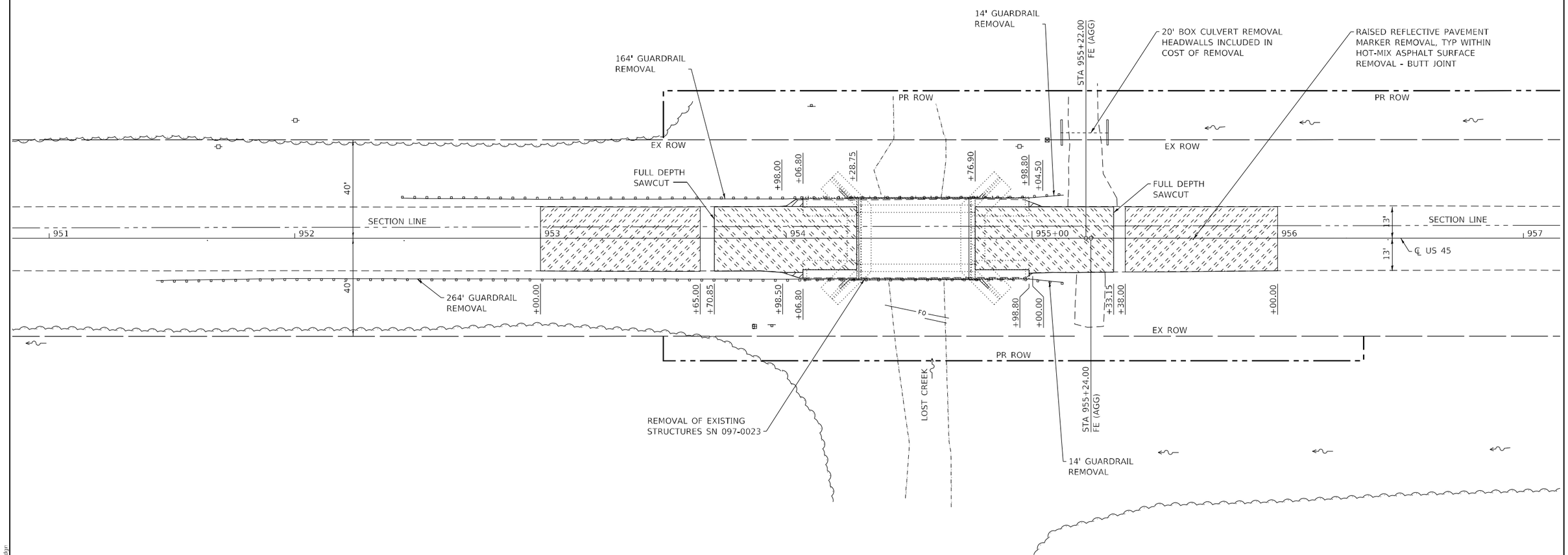

ESCA CONSULTANTS, INC.	USER NAME = IRC	DESIGNED - IRC	REVISED -
	ESCA PROJECT NO. 1359.13	DRAWN - IRC	REVISED -
	PLOT SCALE = 40.0000 ' / in.	CHECKED - ELH	REVISED -
	PLOT DATE = 8/9/2024	DATE - 08/24	REVISED -

STATE OF ILLINOIS
DEPARTMENT OF TRANSPORTATION

REMOVAL PLAN

SCALE: AS SHOWN | SHEET 1 OF 1 SHEETS | STA. 950+85.00 TO STA. 957+15.00

F.A.P. RTE.	SECTION	COUNTY	TOTAL SHEETS	SHEET NO.
328	105B-3	WHITE	71	27

CONTRACT NO. 78833

ILLINOIS | FED. AID PROJECT

MODEL: Default
FILE NAME: Y:\IDOT\1359-13_78833\CADD\Highway\CADD Sheets\D978833-sht-ent01.dgn

LEGEND

- SURVEY MONUMENT FOUND
- SURVEY MONUMENT SET
- SECTION LINE
- QUARTER SECTION LINE
- QUARTER QUARTER SECTION LINE
- PROPERTY LINE
- ROADWAY ALIGNMENT LINE
- EXISTING RIGHT OF WAY LINE
- PROPOSED RIGHT OF WAY LINE
- TEMPORARY EASEMENT LINE

SURVEYOR NOTES

1. REFERENCE IS MADE TO A MONUMENT RECORD BY SCHUH, IPLS 3927, DATED 11/30/2015, AND RECORDED IN BOOK 2015, AT PAGE 16957 IN THE WHITE COUNTY RECORDER'S OFFICE.
2. SEE MON. REC. RECORDED IN BK 2023 PG 8208 & BK 2023 PG 8209 IN CONJUNCTION WITH THIS SURVEY.

SURVEYORS CERTIFICATE

THIS PROFESSIONAL SERVICE CONFORMS TO THE CURRENT ILLINOIS MINIMUM STANDARDS OF PRACTICE APPLICABLE TO BOUNDARY SURVEYS.

DATE: _____ SIGNED: _____

ILLINOIS PROFESSIONAL LAND SURVEYOR
MITCHELL R. GARRETT, NO. 3085
LICENSE EXPIRES 11/30/2024

N

40' 0 40' 80'

BEARINGS ARE REFERENCED TO THE ILLINOIS STATE PLANE COORDINATE SYSTEM WEST ZONE DATUM OF 1983

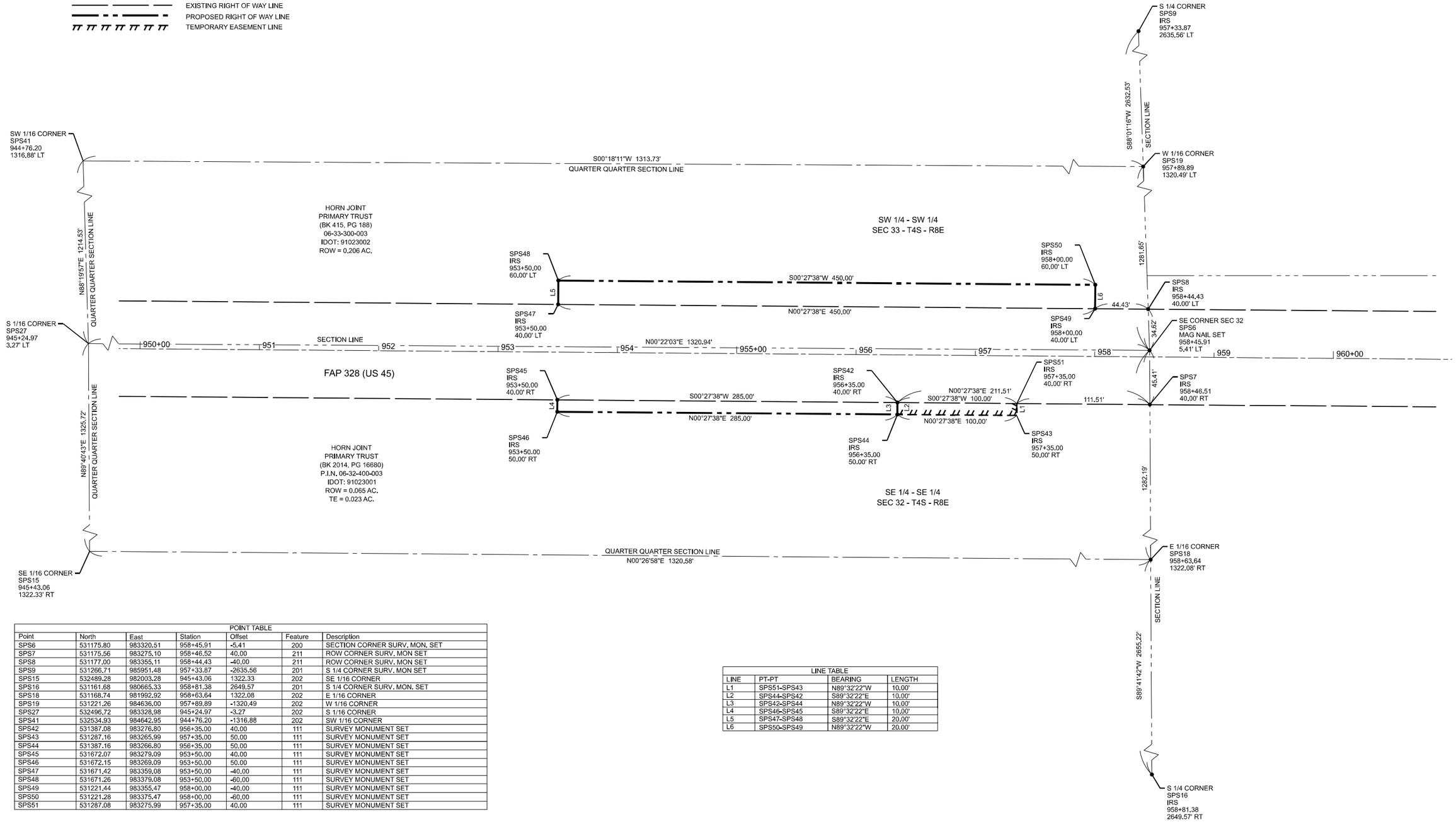

POINT TABLE

Point	North	East	Station	Offset	Feature	Description
SPS6	531175.80	983320.51	958+45.91	-5.41	200	SECTION CORNER SURV. MON. SET
SPS7	531175.56	983275.10	958+46.52	40.00	211	ROW CORNER SURV. MON SET
SPS8	531177.00	983355.11	958+44.43	-40.00	211	ROW CORNER SURV. MON SET
SPS9	531266.71	985951.48	957+33.87	-2635.56	201	S 1/4 CORNER SURV. MON SET
SPS15	532489.28	982003.28	945+43.06	1322.33	202	SE 1/16 CORNER
SPS16	531161.68	980665.33	958+81.38	2649.57	201	S 1/4 CORNER SURV. MON. SET
SPS18	531168.74	981992.92	958+63.64	1322.08	202	E 1/16 CORNER
SPS19	531221.26	984636.00	957+89.89	-1320.49	202	W 1/16 CORNER
SPS27	532496.72	983328.98	945+24.97	-3.27	202	S 1/16 CORNER
SPS41	532534.93	984642.95	944+76.20	-1316.88	202	SW 1/16 CORNER
SPS42	531387.08	983276.80	956+35.00	40.00	111	SURVEY MONUMENT SET
SPS43	531287.16	983265.99	957+35.00	50.00	111	SURVEY MONUMENT SET
SPS44	531387.16	983266.80	956+35.00	50.00	111	SURVEY MONUMENT SET
SPS45	531672.07	983279.09	953+50.00	40.00	111	SURVEY MONUMENT SET
SPS46	531672.15	983269.09	953+50.00	50.00	111	SURVEY MONUMENT SET
SPS47	531671.42	983359.08	953+50.00	-40.00	111	SURVEY MONUMENT SET
SPS48	531671.26	983379.08	953+50.00	-60.00	111	SURVEY MONUMENT SET
SPS49	531221.44	983355.47	958+00.00	-40.00	111	SURVEY MONUMENT SET
SPS50	531221.28	983375.47	958+00.00	-60.00	111	SURVEY MONUMENT SET
SPS51	531287.08	983275.99	957+35.00	40.00	111	SURVEY MONUMENT SET

LINE TABLE

LINE	PT-PT	BEARING	LENGTH
L1	SPS51-SPS43	N89°32'22"W	10.00'
L2	SPS44-SPS42	S89°32'22"E	10.00'
L3	SPS42-SPS44	N89°32'22"W	10.00'
L4	SPS46-SPS45	S89°32'22"E	10.00'
L5	SPS47-SPS48	S89°32'22"E	20.00'
L6	SPS50-SPS49	N89°32'22"W	20.00'

MODEL: ROW Sheet-1 [Sheet]
FILE NAME: c:\pw_work\pwidot\kirbyeal\d1028252\D978833-ROW.dgn

USER NAME = Ehren.Kirby	DESIGNED -	REVISED -	
	DRAWN -	REVISED -	
	CHECKED -	REVISED -	
PLOT DATE = 8/7/2024	DATE -	REVISED -	

STATE OF ILLINOIS
DEPARTMENT OF TRANSPORTATION

RIGHT-OF-WAY PLAN

SCALE: SHEET OF SHEETS STA. TO STA.

F.A.P. RTE.	SECTION	COUNTY	TOTAL SHEETS	SHEET NO.
328	105B-3	WHITE	71	28

CONTRACT NO. 78833

ILLINOIS FED. AID PROJECT

SEEDING & MULCHING

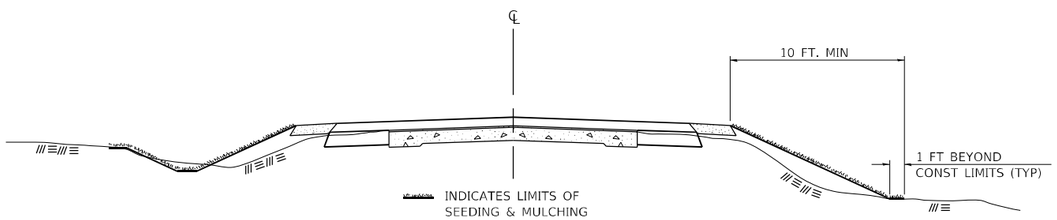

GENERAL NOTES

IN GENERAL, ALL EARTH SURFACES DISTURBED DURING CONSTRUCTION OPERATIONS SHALL BE SEEDED AND MULCHED UPON COMPLETION OF ALL GRADING OPERATIONS.

ON DETOUR ROADS, SLOPES SHALL BE SEEDED IMMEDIATELY UPON COMPLETION OF ANY GIVEN STAGE GRADING. TEMPORARY SEEDING SHALL BE CLASS 7.

FERTILIZER NUTRIENTS SHALL BE APPLIED TO ALL SEEDED AREAS.
LIMESTONE SHALL BE APPLIED TO ALL AREAS OF FINAL SEEDING.

THE RATES OF APPLICATION OF FERTILIZER, MULCH AND LIMESTONE SHALL BE AS SPECIFIED IN THE STANDARD SPECIFICATIONS FOR ROAD AND BRIDGE CONSTRUCTION.

SECTIONS 250 AND 251 SHALL GOVERN THIS WORK EXCEPT AS SPECIFIED HEREIN OR AS NOTED IN THE SPECIAL PROVISIONS.

STD. 9-12

REVISIONS

REDRAWN	2-15-89
REVISED	8-15-94
REVISED	6-3-99
REVISED	3-27-08
REVISED	5-16-13
REVISED	10-21-21

TYPICAL CROSS SECTION SHOWING STEP CONSTRUCTION ON EXISTING FILL

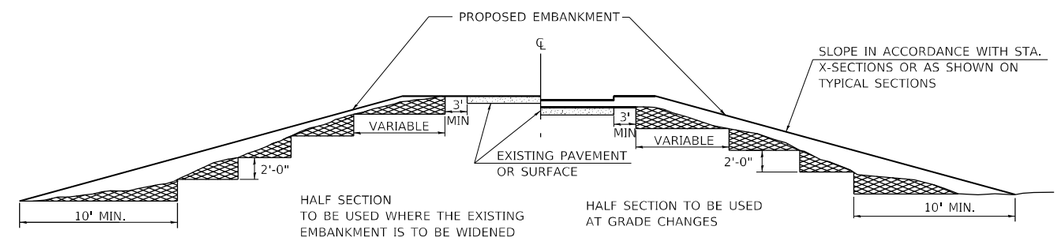

STEPS SHALL BE CUT IN THE EXISTING SLOPE IN ACCORDANCE WITH ART. 205.03 EXCEPT THAT THE REQUIREMENT THAT STEPS SHALL BE CUT INTO THE EXISTING SLOPE BEFORE THE CONSTRUCTION OF THE EXISTING EMBANKMENT IS STARTED SHALL NOT APPLY. MATERIAL TO BE REMOVED AND REPLACED IN THE EMBANKMENT IN ACCORDANCE WITH ART. 205.04. COST TO BE INCLUDED IN THE VARIOUS ITEMS OF EXCAVATION AND NO ADDITIONAL COMPENSATION WILL BE ALLOWED BECAUSE OF THIS WORK.

STD. 9-16

REVISIONS

REDRAWN	2-15-89
REVISED	8-15-94
CHECKED	6-3-99
RESIZED	5-7-08
REVIEWED	5-17-13
REVISED	4-22-21
REVISED	10-21-21

MODEL: PLOT
FILE NAME: Y:\IDOT\1359-13_78833\CADD\Highway\CADD Sheets\0978833-sht-detail01.dgn

ESCA CONSULTANTS, INC.

USER NAME = IRC	DESIGNED - IRC	REVISED -
ESCA PROJECT NO. 1359.13	DRAWN - IRC	REVISED -
PLOT SCALE = 0.1667 ' / in.	CHECKED - ELH	REVISED -
PLOT DATE = 8/9/2024	DATE - 10/23	REVISED -

STATE OF ILLINOIS
DEPARTMENT OF TRANSPORTATION

SEEDING AND MULCHING
& STEP CONSTRUCTION ON EXISTING FILL

SCALE: NONE | SHEET NO. 1 OF 1 SHEETS | STA. TO STA.

F.A.P. RTE.	SECTION	COUNTY	TOTAL SHEETS	SHEET NO.
328	105B-3	WHITE	71	29

CONTRACT NO. 78833

ILLINOIS | FED. AID PROJECT

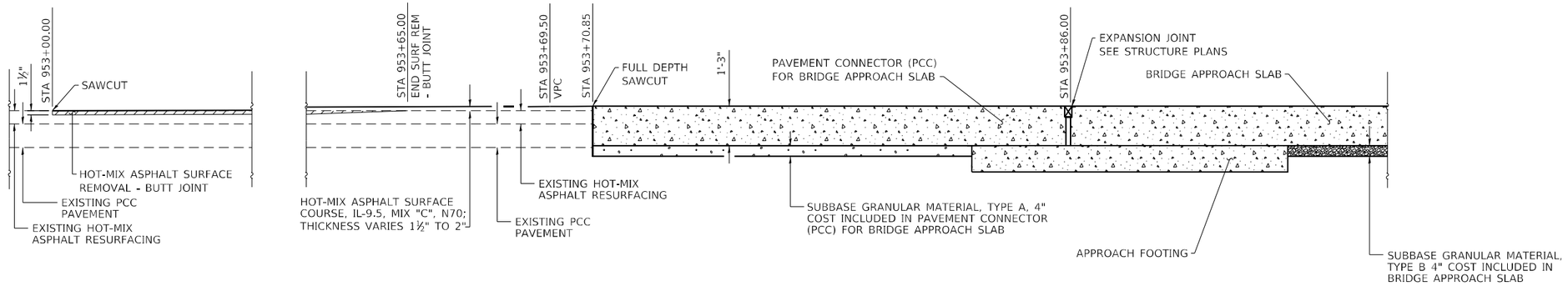

LONGITUDINAL SECTION

FAP 328 (US 45) STA 953+00.00 TO STA 954+16.00

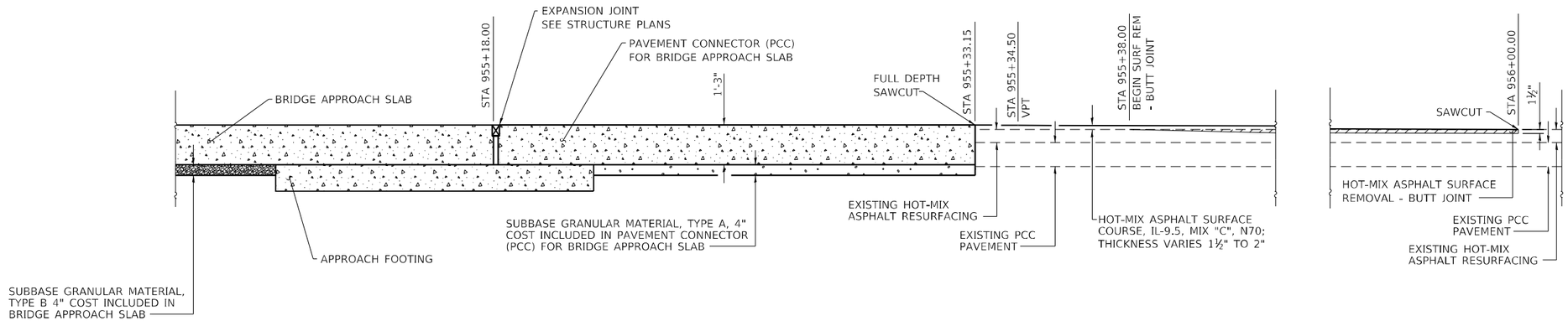

LONGITUDINAL SECTION

FAP 328 (US 45) STA 954+88.00 TO STA 956+00.00

MODEL: PLOT
FILE NAME: Y:\IDOT\1359-13_78833\CADD\Highway\CADD Sheets\0978833-sht-detail02.dgn

ESCA CONSULTANTS, INC. CIVIL & STRUCTURAL ENGINEERS	USER NAME = IRC	DESIGNED - IRC	REVISED -	STATE OF ILLINOIS DEPARTMENT OF TRANSPORTATION	PAVEMENT TRANSITION DETAILS	F.A.P. RTE.	SECTION	COUNTY	TOTAL SHEETS / SHEET NO.
	ESCA PROJECT NO. 1359.13	DRAWN - IRC	REVISED -			328	105B-3	WHITE	71 / 30
	PLOT SCALE = 0.1667 ' / in.	CHECKED - ELH	REVISED -					CONTRACT NO. 78833	
	PLOT DATE = 8/9/2024	DATE - 10/23	REVISED -		SCALE: NONE / SHEET NO. 1 OF 1 SHEETS / STA. TO STA.		ILLINOIS	FED. AID PROJECT	

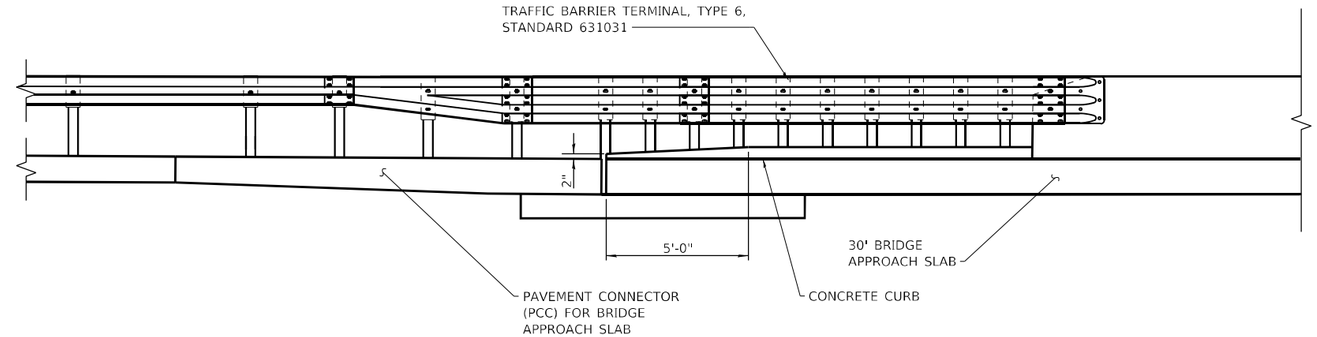

SECTION A–A

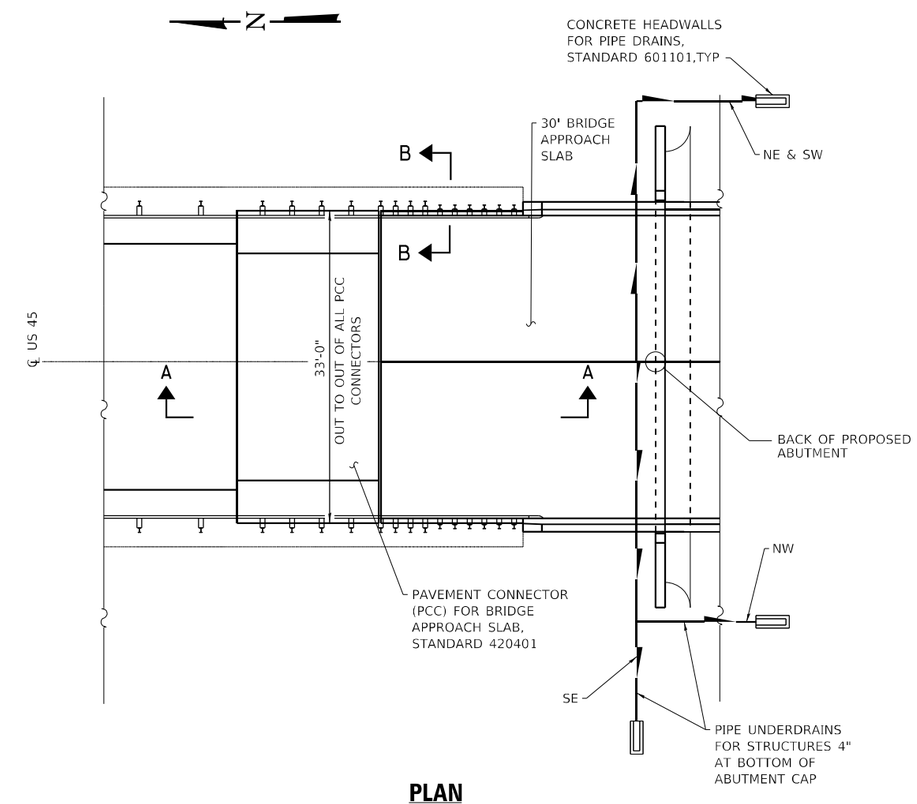

PLAN

(NORTH ABUTMENT OF SN 097-0083 SHOWN; SOUTH ABUTMENT SIMILAR)

MODEL: PLOT
FILE NAME: Y:\DOT\1359-13_78833\CADD\Highways\CADD_Sheets\D978833-sht-detail03.dgn

ESCA CONSULTANTS, INC. CIVIL STRUCTURAL TRAFFIC	USER NAME = IRC	DESIGNED - IRC	REVISED -
	ESCA PROJECT NO. 1359.13	DRAWN - IRC	REVISED -
	PLOT SCALE = 0.1667 ' / in.	CHECKED - ELH	REVISED -
	PLOT DATE = 8/9/2024	DATE - 10/23	REVISED -

STATE OF ILLINOIS
DEPARTMENT OF TRANSPORTATION

PAVEMENT CONNECTOR DETAILS

SCALE: NONE | SHEET NO. 1 OF 1 SHEETS | STA. TO STA.

F.A.P. RTE.	SECTION	COUNTY	TOTAL SHEETS	SHEET NO.
328	105B-3	WHITE	71	31
		CONTRACT NO. 78833		
	ILLINOIS	FED. AID PROJECT		

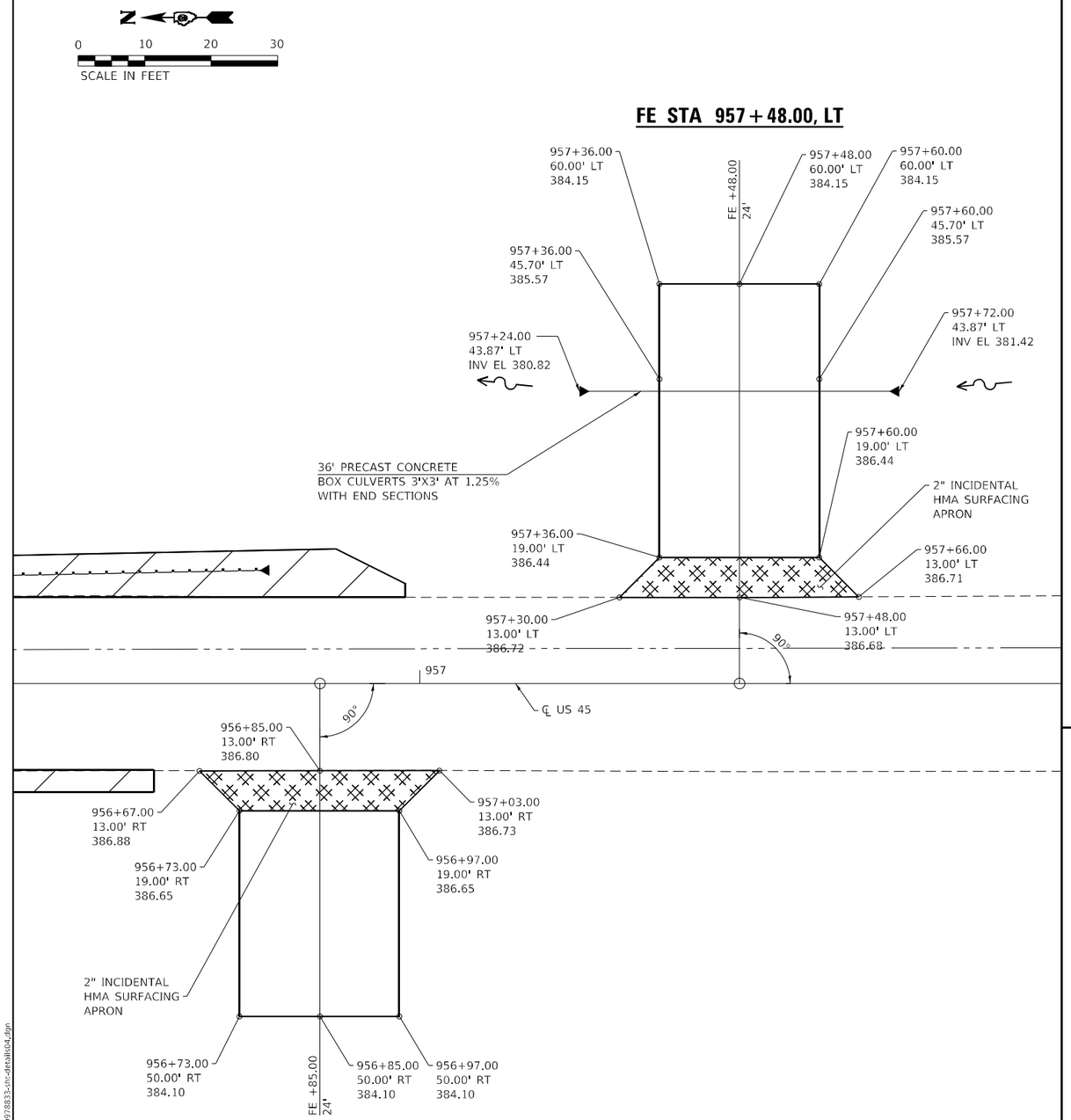

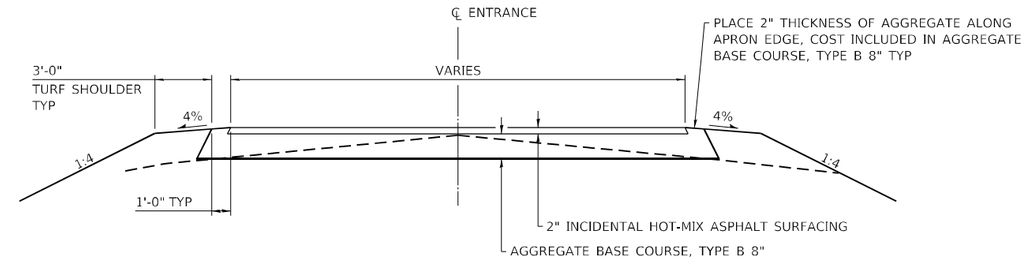

ENTRANCE TYPICAL SECTION (APRON)

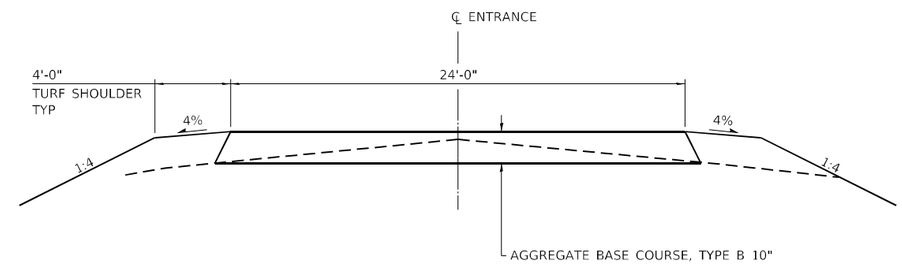

ENTRANCE TYPICAL SECTION

NOTE: NOT TO SCALE

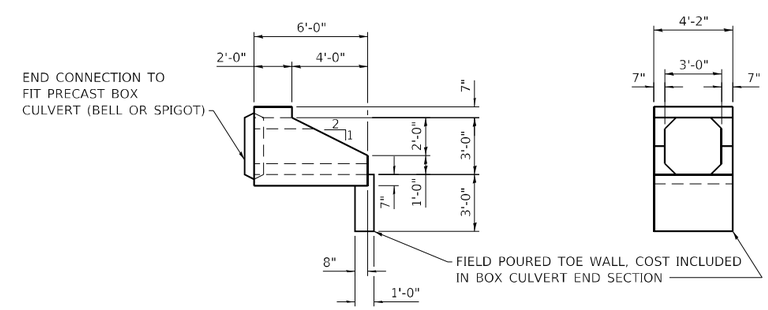

LONGITUDINAL SECTION **END VIEW**

PRECAST BOX CULVERT END SECTION DETAILS

NOTE: NOT TO SCALE

MODEL: PLOT
FILE NAME: Y:\IDOT\1359-13_78833\CADD\Highway\CADD Sheets\0978833-sht-details04.dgn

ESCA CONSULTANTS, INC.

USER NAME = IRC	DESIGNED - IRC	REVISED -
ESCA PROJECT NO. 1359.13	DRAWN - IRC	REVISED -
PLOT SCALE = 0.1667 ' / in.	CHECKED - ELH	REVISED -
PLOT DATE = 8/9/2024	DATE - 10/23	REVISED -

STATE OF ILLINOIS
DEPARTMENT OF TRANSPORTATION

ENTRANCE DETAILS

SCALE: AS SHOWN | SHEET NO. 1 OF 1 SHEETS | STA. TO STA.

F.A.P. RTE.	SECTION	COUNTY	TOTAL SHEETS	SHEET NO.
328	105B-3	WHITE	71	32

CONTRACT NO. 78833

ILLINOIS | FED. AID PROJECT

BUTT JOINT

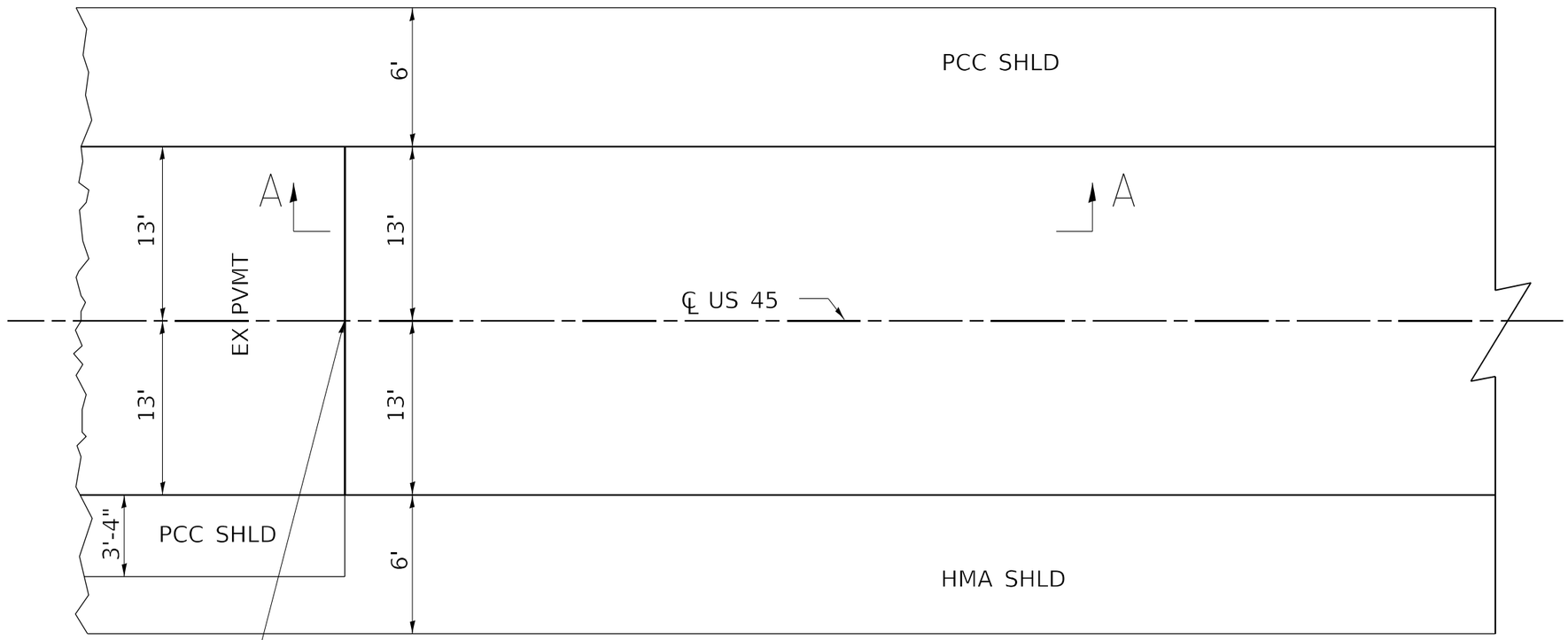

STA 953+00 NORTH
STA 956+00 SOUTH

LENGTH VARIES (SEE SHEET 26)
HOT-MIX ASPHALT SURFACE REMOVAL-
BUTT JOINT

HOT-MIX ASPHALT SURF
CSE, IL-9.5, MIX "C", N70;
THICKNESS VARIES 1½" TO 2"

SAW CUT (INCLUDED IN THE COST OF
HMA SURFACE REMOVAL-BUTT JOINT)

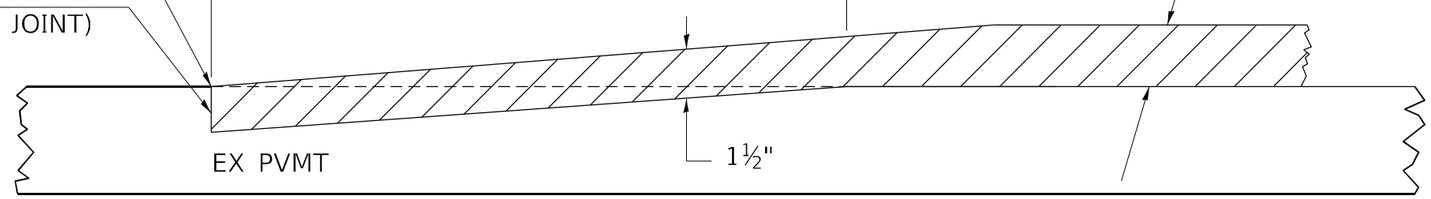

SECTION A–A

MODEL: PLOT
FILE NAME: V:\IDOT\1339-13 78833\CADD\Highway\CADD Sheets\0978833-int-detail05.dgn

ESCA CONSULTANTS, INC. ENGINEERING INSTITUTE	USER NAME = IRC	DESIGNED - IRC	REVISED -	STATE OF ILLINOIS DEPARTMENT OF TRANSPORTATION	BUTT JOINT DETAILS	F.A.P. RTE.	SECTION	COUNTY	TOTAL SHEETS / SHEET NO.
	ESCA PROJECT NO. 1359.13	DRAWN - IRC	REVISED -			328	105B-3	WHITE	71 / 33
	PLOT SCALE = 0.1667 ' / in.	CHECKED - ELH	REVISED -					CONTRACT NO. 78833	
	PLOT DATE = 8/9/2024	DATE - 10/23	REVISED -		SCALE: NONE / SHEET NO. 1 OF 1 SHEETS / STA. TO STA.		ILLINOIS	FED. AID PROJECT	

ILLINOIS STANDARD

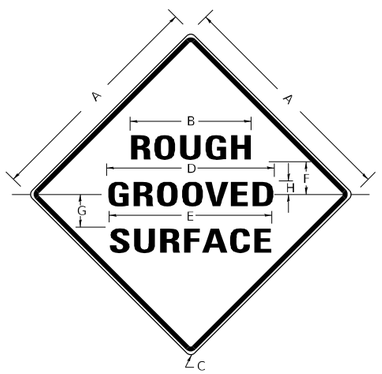

COLORS:

LEGEND AND BORDER- BLACK NON-REFLECTORIZED
BACKGROUND- ORANGE REFLECTORIZED

SIGN SIZE	DIMENSIONS							
	A	B	C	D	E	F	G	H
48X48	48.0	24.1	3.0	34.0	33.0	6.0	13.0	3.5

SIGN SIZE	SERIES LINES			MARGIN	BORDER	BLANK STD.
	1	2	3			
48X48	7C	7C	7C	0.8	1.2	B4-48D

ALL DIMENSIONS IN INCHES

NOTES:

PRIOR TO ALLOWING TRAFFIC ON ANY PORTION OF THE ROADWAY THAT HAS BEEN COLDMILLED, THE CONTRACTOR SHALL HAVE ERECTED "ROUGH GROOVED SURFACE" SIGNS THAT CONFORM TO THE ABOVE DETAILS. A MINIMUM OF ONE SIGN AT EACH END OF THE IMPROVEMENT WILL BE REQUIRED. THE CONTRACTOR SHALL MAINTAIN THE "ROUGH GROOVED SURFACE" SIGNS UNTIL THE COLDMILLED SURFACE IS COVERED WITH LEVELING BINDER OR SURFACE COURSE.

IF AT ANY TIME THE SIGNS ARE IN PLACE BUT NOT APPLICABLE, THEY SHALL BE TURNED FROM THE VIEW OF MOTORISTS OR COVERED AS DIRECTED BY THE ENGINEER.

THE COST OF FURNISHING, ERECTING, MAINTAINING, AND REMOVING THE REQUIRED SIGNS SHALL BE INCLUDED IN THE CONTRACT.

REVISIONS

REDRAWN	2-15-89
REVISED	4-6-93
REVISED	3-27-08
REVIEWED	5-17-13
REVISED	10-21-21

STD. 9-39

UNEVEN LANES SIGN

W8-11 (48" x 48")

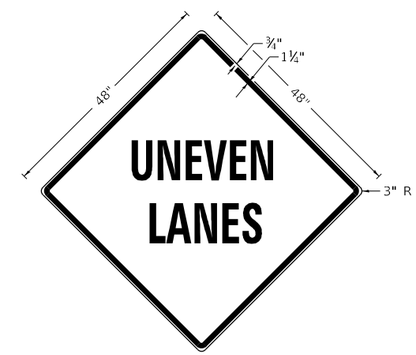

COLORS:

LEGEND AND BORDER - BLACK NON-REFLECTORIZED
BACKGROUND - ORANGE REFLECTORIZED

NOTE: PRIOR TO ALLOWING TRAFFIC ON ANY PORTION OF THE ROADWAY THAT HAS BEEN COLDMILLED OR BEFORE RESURFACING OPERATIONS BEGIN, THE CONTRACTOR SHALL HAVE ERECTED "UNEVEN LANES" SIGNS THAT CONFORM TO THE ABOVE DETAILS. A MINIMUM OF ONE SIGN AT EACH END OF THE IMPROVEMENT WILL BE REQUIRED. THE CONTRACTOR SHALL MAINTAIN THE "UNEVEN LANES" SIGNS UNTIL THE RESURFACING OPERATIONS ARE COMPLETED.

IF AT ANY TIME THE SIGNS ARE IN PLACE BUT NOT APPLICABLE, THEY SHALL BE TURNED FROM THE VIEW OF MOTORISTS OR COVERED AS DIRECTED BY THE ENGINEER.

THE COST OF FURNISHING, ERECTING, MAINTAINING, AND REMOVING THE REQUIRED SIGNS SHALL BE INCLUDED IN THE CONTRACT.

REVISIONS

DRAWN	2-15-89
REVISED	4-06-93
REDSIGNED	7-23-04
RESIZED	5-08-08
REVIEWED	5-17-13
REVISED	10-21-21

STD. 9-41

MODEL: PLOT
FILE NAME: Y:\IDOT\1359-13_78833\CADD\Highway\CADD Sheets\0978833-sht-detail607.dgn

ESCA CONSULTANTS, INC.

USER NAME = IRC	DESIGNED - IRC	REVISED -	
ESCA PROJECT NO. 1359.13	DRAWN - IRC	REVISED -	
PLOT SCALE = 0.1667 ' / in.	CHECKED - ELH	REVISED -	
PLOT DATE = 8/9/2024	DATE - 10/23	REVISED -	

STATE OF ILLINOIS
DEPARTMENT OF TRANSPORTATION

ROUGH GROOVED SURFACE SIGN
& UNEVEN LANES SIGN DETAILS

SCALE: NONE | SHEET NO. 1 OF 1 SHEETS | STA. TO STA.

F.A.P. RTE.	SECTION	COUNTY	TOTAL SHEETS	SHEET NO.
328	105B-3	WHITE	71	34

CONTRACT NO. 78833

ILLINOIS | FED. AID PROJECT

BENCHMARK:
BM45-4 - A "□" cut on top of the southeast wingwall of SN 097-0063, elev. 384.996 (NAVD88).

EXISTING STRUCTURE:
SN 097-0023 was originally constructed in 1928 as SBI Route 140, Section 105B. It was widened with precast prestressed concrete deck beams in 1978. The bridge is a single-span with reinforced concrete T-beams and deck beams supported by closed abutments on untreated timber piles. The bridge is 48'-0" long back-to-back abutments. The out-to-out width of superstructure is 33'-1½". The bridge is not skewed. Traffic will be maintained using stage construction.

No salvage.

LOADING HL-93

Allow 50 psf for future wearing surface

DESIGN SPECIFICATIONS

2020 AASHTO LRFD Bridge Design Specifications, 9th Edition

SEISMIC DATA

Seismic Performance Zone (SPZ) = 2
Design Spectral Acceleration at 1.0 sec. (S_{D1}) = 0.302 g
Design Spectral Acceleration at 0.2 sec. (S_{DS}) = 0.720 g
Soil Site Class = D

DESIGN STRESSES FIELD UNITS

f'c = 3,500 psi (substructure concrete)
f'c = 4,000 psi (superstructure concrete)
fy = 50,000 psi (AASHTO M270, Grade 50) (1)
fy = 60,000 psi (reinforcement)

(1) All structural steel shall be metallized.

STRUCTURE INDEX OF SHEETS

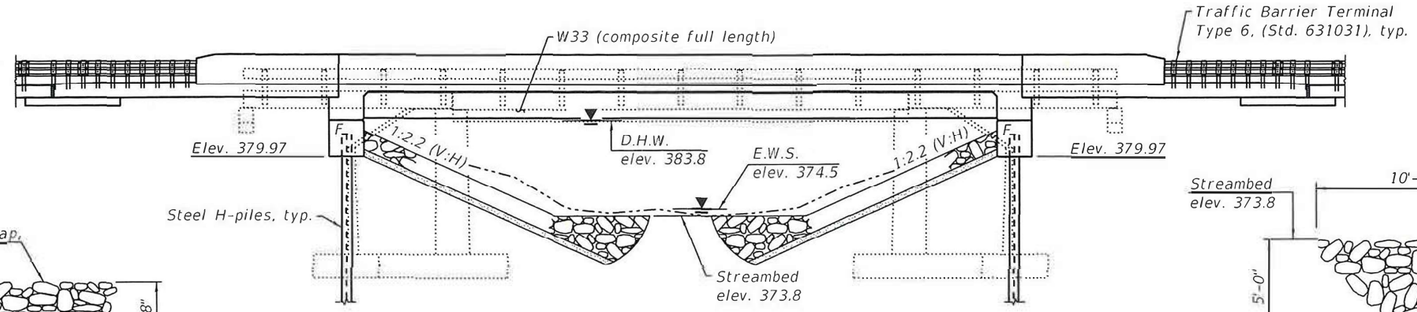

ELEVATION

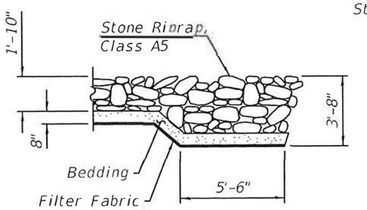

SECTION B-B

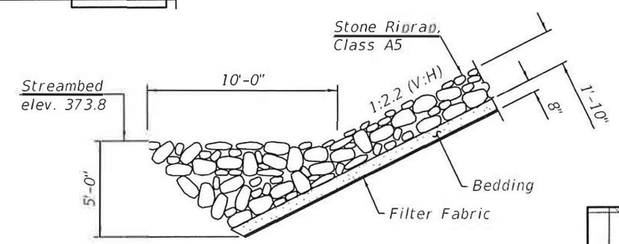

SECTION A-A

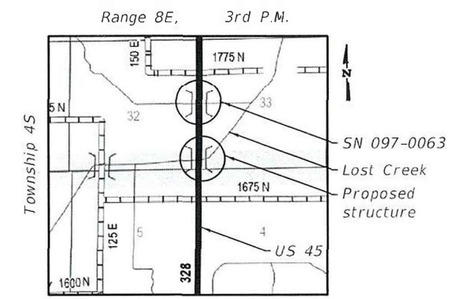

LOCATION SKETCH

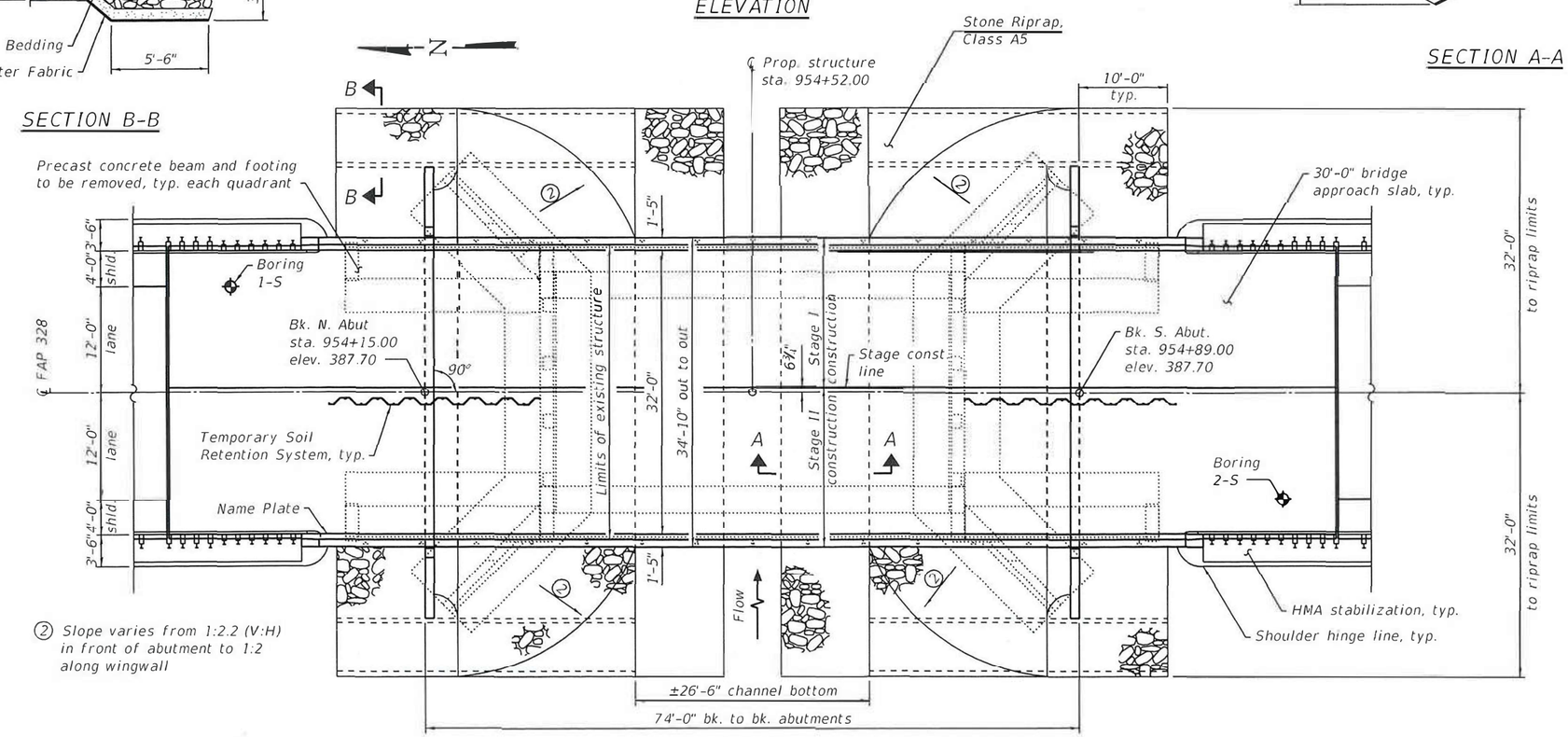

PLAN

STATE OF ILLINOIS
ERIC L. HENKEL
No. 081-006159
LICENSED STRUCTURAL ENGINEER
EXPIRES 11-30-24
SIGNATURE
04-17-2024
DATE

APPROVED
For Structural Adequacy Only
Engineer of Bridges & Structures

GENERAL PLAN & ELEVATION
US 45 OVER LOST CREEK
FAP ROUTE 328 - SECTION 105B-3
WHITE COUNTY
STATION 954+52.00
STRUCTURE NO. 097-0083

REV - MS

ESCA CONSULTANTS, INC.	USER NAME = ...	DESIGNED - ELH 01/24	REVISED -	STATE OF ILLINOIS DEPARTMENT OF TRANSPORTATION	GENERAL PLAN AND ELEVATION
	ESCA PROJECT NO. 1359.13	CHECKED - CTJ 01/24	REVISED -		
	PLOT SCALE = 0.1667 ' / in.	DRAWN - NHC 01/24	REVISED -		
	PLOT DATE = 4/15/2024	CHECKED - ELH 01/24	REVISED -		SHEET 1 OF 24 SHEETS

F.A.P. RTE.	SECTION	COUNTY	TOTAL SHEETS	SHEET NO.
328	105B-3	WHITE	71	35
		CONTRACT NO. 78833		
		ILLINOIS FED. AID PROJECT		

MODEL: PLOT
FILE NAME: Y:\IDOT\1359-13_78833\CADD\SP SN 097-0083\0970083-78833-01-GenPlan.dgn
4/15/2024 10:26:03 AM

GENERAL NOTES

1. Fasteners shall be ASTM F3125 Grade A325 Type 1, hot dip galvanized bolts in metallized areas. Bolts ¾ in. dia., holes 15/16 in. dia., unless otherwise noted. See Special Provision for "Metallizing of Structural Steel."
2. Calculated weight of Structural Steel = 57,030 lbs. (Grade 50)
   = 6,430 lbs. (Grade 36)
3. All structural steel shall be metallized. See Special Provision for "Metallizing of Structural Steel."
4. No field welding is permitted except as specified in the contract documents.
5. Reinforcement bars designated (E) shall be epoxy coated.
6. Slipforming of the parapets is not allowed.
7. Bearing seat surfaces shall be constructed or adjusted to the designated elevations within a tolerance of ⅛ in. (0.01 ft.). Adjustment shall be made either by grinding the surface or by shimming the bearings.
8. Layout of the slope protection system may be varied to suit ground conditions in the field as directed by the Engineer.
9. Removal of the existing bridge rail and precast concrete beams and footings at each quadrant of the bridge approaches is included in Removal of Existing Structures.
10. The bridge approach slabs and pavement connectors shall receive Bridge Deck Grooving.
11. The tops and inside faces of curbs and parapets and the bridge deck and bridge approach slabs shall receive Protective Coat. See Roadway Plans for treatment of pavement connectors.
12. Excavation behind existing abutment walls shall be performed to balance front and back soil pressure before removing the existing superstructure. The Contractor shall sawcut the upper portion of the existing abutment at the stage removal line before Stage I removal to ensure the remaining portion will not be prematurely damaged.

STA. 954+52.00
BUILT 20__ BY
STATE OF ILLINOIS
F.A.P. RT. 328 SEC. 105B-3
LOADING HL-93
STR. NO. 097-0083

NAME PLATE
See Std. 515001

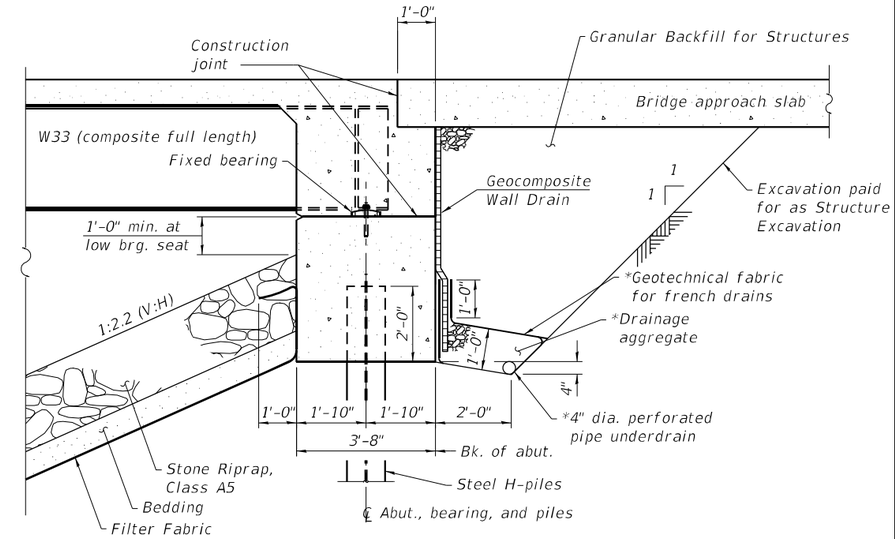

SECTION THROUGH INTEGRAL ABUTMENT

*Included in the cost of Pipe Underdrains for Structures.

Note:
All drainage system components shall extend to 2'-0" from the end of each wingwall except an outlet pipe shall extend until intersecting with the side slopes. The pipes shall drain into concrete headwalls. (See Article 601.05 of the Standard Specifications and Highway Standard 601101).

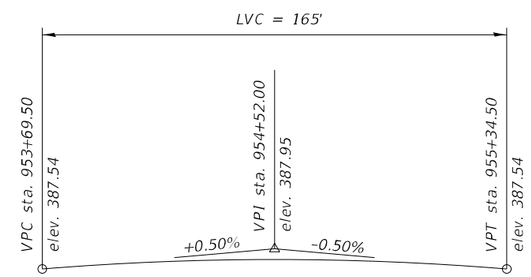

PROFILE GRADE
(Along ℄ FAP 328)

DESIGN SCOUR ELEVATION TABLE

Event / Limit State	Design Scour Elevations (ft.)		
	N. Abut.	S. Abut.	Item 113
Q100	380.0	380.0	8
Q200	380.0	380.0	
Design	380.0	380.0	
Check	380.0	380.0	

WATERWAY INFORMATION TABLE

Drainage Area = 17.65 sq. mi.

Existing Overtopping Elev. 385.38 at Sta. 945+00
Proposed Overtopping Elev. 385.38 at Sta. 945+00

Flood Event	Freq. Yr.		Discharge (cfs)		Waterway Opening (sq. ft.)		Natural H.W.E.	Head (ft.)		Headwater Elevation	
			Existing	Proposed	Existing	Proposed		Existing	Proposed	Existing	Proposed
	10	Main Channel	2533	2511	345	382	383.2	1.7	1.8	384.9	385.0
		Relief Structure	777	799	162	162					
		TOTAL	3310	3310	507	544					
Existing Overtopping	13	Main Channel	2849	-	350	-	383.3	2.1	-	385.4	-
		Relief Structure	838	-	165	-					
		TOTAL	3687	-	515	-					
Proposed Overtopping	35	Main Channel	-	3040	-	414	383.7	-	1.7	-	385.4
		Relief Structure	-	1917	-	174					
		TOTAL	-	4957	-	588					
Design	50	Main Channel	3661	3363	370	420	383.8	2.0	1.6	385.8	385.4
		Relief Structure	1659	1957	180	180					
		TOTAL	5320	5320	550	600					
Base	100	Main Channel	3758	3027	370	428	384.1	2.0	1.5	386.1	385.6
		Relief Structure	2462	3193	183	183					
		TOTAL	6220	6220	553	611					
Scour Design Check	200	Main Channel	4326	3538	370	428	384.3	1.8	1.4	386.1	385.7
		Relief Structure	2865	3653	183	183					
		TOTAL	7191	7191	553	611					

10 year velocity through existing bridge = 10.7 ft/s
10 year velocity through proposed bridge = 10.3 ft/s

TOTAL BILL OF MATERIAL

ITEM	UNIT	SUPER	SUB	TOTAL
Stone Riprap, Class A5	Sq. Yd.	-	592	592
Filter Fabric	Sq. Yd.	-	592	592
Removal of Existing Structures	Each	-	-	1
Structure Excavation	Cu. Yd.	-	250	250
Concrete Structures	Cu. Yd,	-	65.0	65.0
Concrete Superstructure	Cu. Yd.	120.8	-	120.8
Bridge Deck Grooving	Sq. Yd.	540	-	540
Protective Coat	Sq. Yd.	570	-	570
Concrete Superstructure (Approach Slab)	Cu. Yd.	95.0	-	95.0
Furnishing and Erecting Structural Steel	L Sum	1	-	1
Stud Shear Connectors	Each	1,314	-	1,314
Reinforcement Bars, Epoxy Coated	Pound	57,730	11,350	69,080
Bar Terminator	Each	214	352	566
Bar Splicers	Each	434	100	534
Furnishing Steel Piles HP12x63	Foot	-	555	555
Driving Piles	Foot	-	555	555
Test Pile Steel HP12x63	Each	-	2	2
Pile Shoes	Each	-	12	12
Name Plates	Each	1	-	1
Anchor Bolts, 1"	Each	-	24	24
Temporary Soil Retention System	Sq. Ft.	-	338	338
Granular Backfill for Structures	Cu. Yd.	-	115	115
Geocomposite Wall Drain	Sq. Yd.	-	62	62
Pipe Underdrains for Structures 4"	Foot	-	154	154

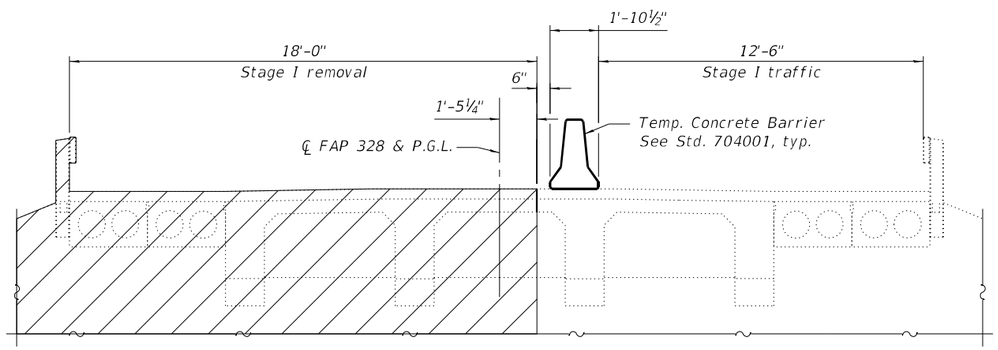

STAGE I REMOVAL

(Looking South)

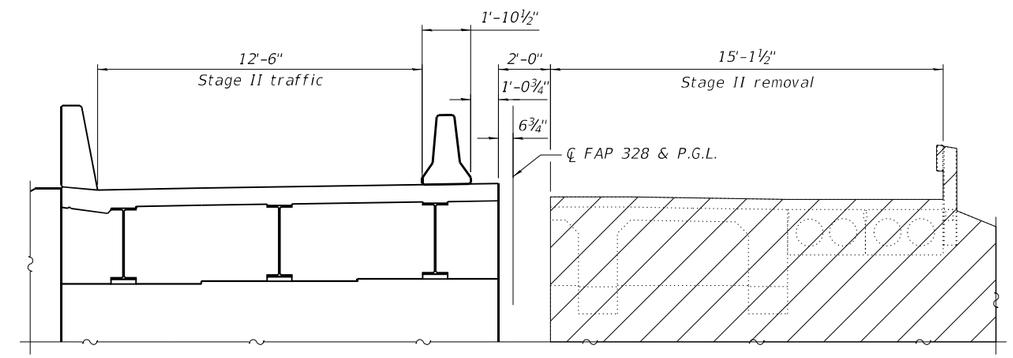

STAGE II REMOVAL

(Looking South)

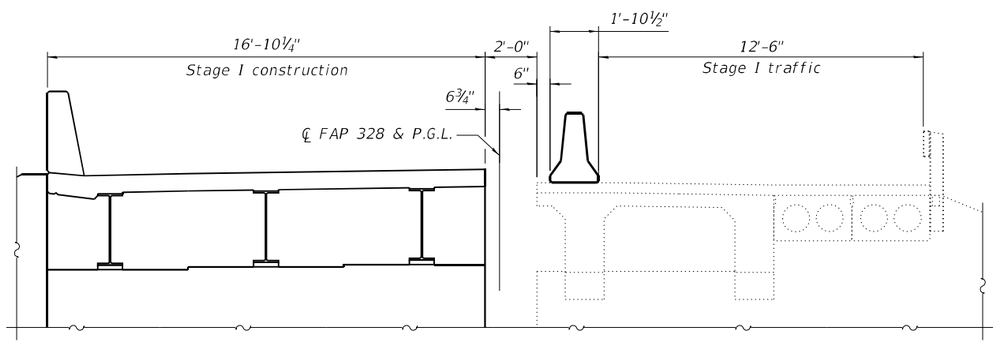

STAGE I CONSTRUCTION

(Looking South)

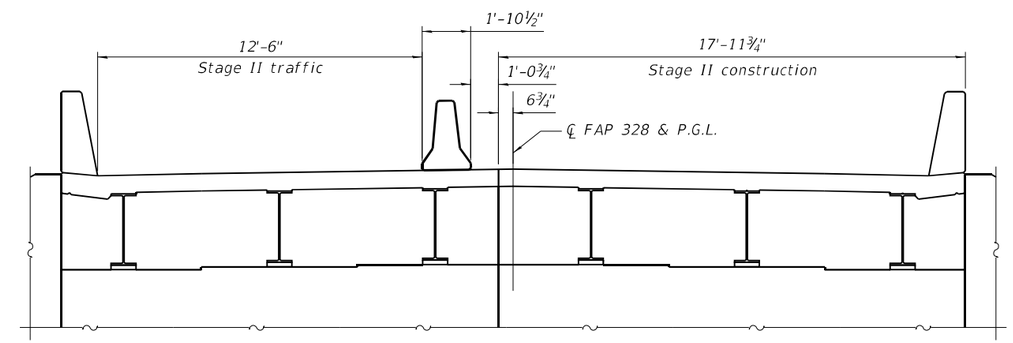

STAGE II CONSTRUCTION

(Looking South)

Notes:
1. Hatched areas indicate Removal of Existing Structures.
2. For quantity of Temporary Concrete Barrier, see Roadway Plans.
3. Cost of removing existing steel bridge rail is included in Removal of Existing Structures.

MODEL: Default
FILE NAME: pw:\\keg-pw.bentley.com:keg-pw-01\Documents\IDOT Projects\20-1109.13 (SS4)\0_IDOT\Structures\0970083-78833-003-StageDetails

6/5/2024 12:53:31 PM

USER NAME =	DESIGNED - MI	REVISED -	
	CHECKED - MLC	REVISED -	
PLOT SCALE =	DRAWN - MI	REVISED -	
PLOT DATE =	CHECKED - MLC	REVISED -	

STATE OF ILLINOIS
DEPARTMENT OF TRANSPORTATION

STAGE CONSTRUCTION DETAILS
STRUCTURE NO. 097-0083

SHEET 3 OF 24 SHEETS

F.A.P. RTE.	SECTION	COUNTY	TOTAL SHEETS	SHEET NO.
328	105B-3	WHITE	71	37
		CONTRACT NO. 78833		
	ILLINOIS	FED. AID PROJECT		

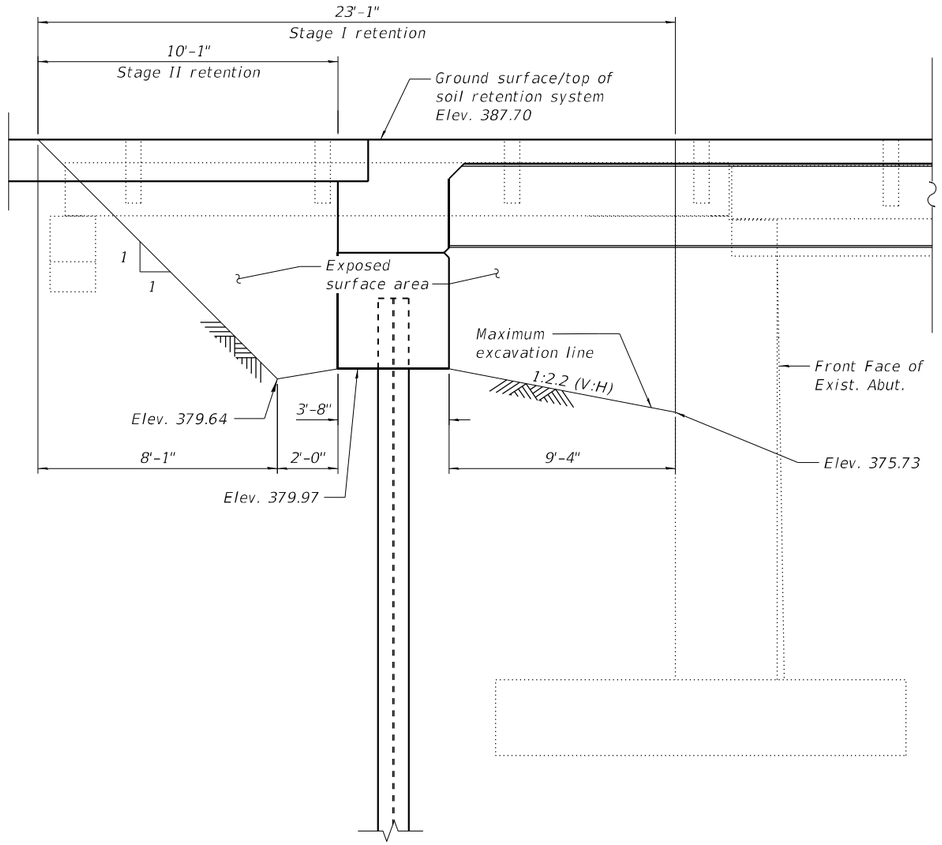

NORTH ABUTMENT

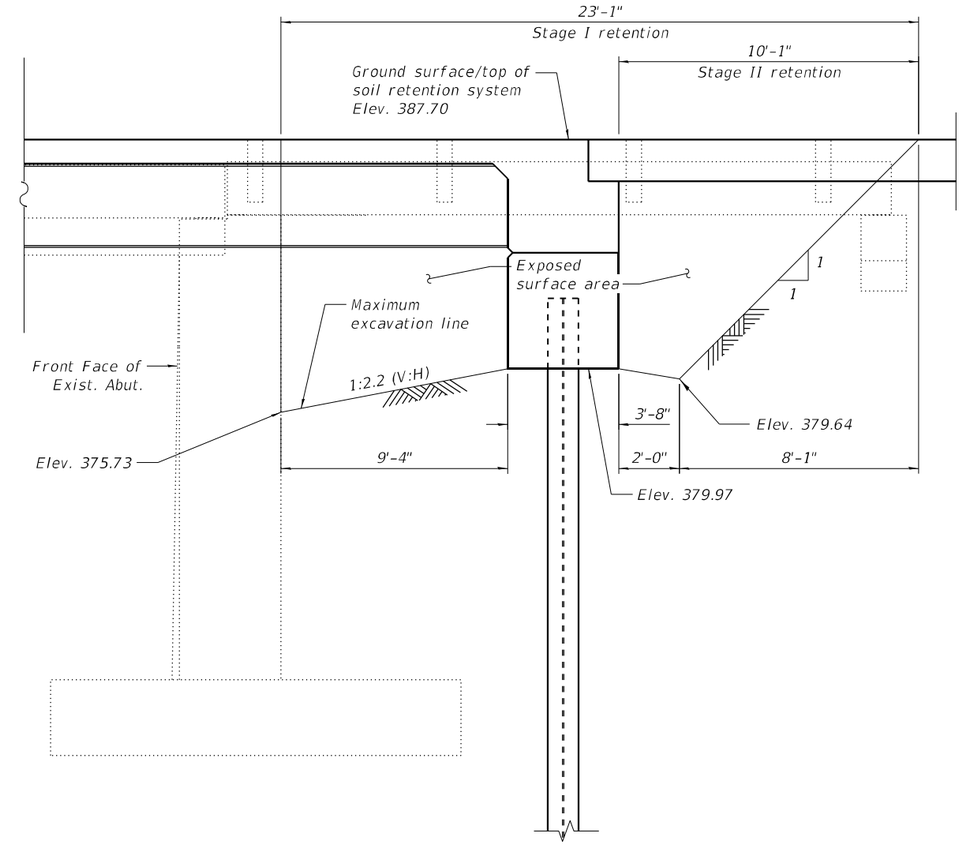

SOUTH ABUTMENT

Notes:

1. A cantilevered sheet piling design does not appear feasible and additional members or other retention systems may be necessary. The Contractor shall submit a temporary soil retention system design including plan details and calculations for review and acceptance by the Engineer.
2. Elevations and dimensions shown are approximate based on existing plan data. Exact elevations and dimensions required shall be field verified by the Contractor.

MODEL: Default
FILE NAME: pw:\\keg-pw.bentley.com:keg-pw-01\Documents\IDOT Projects\20-1109.13 (SS4)\0_IDOTStructures\0970083-78833-004-TSRSDetails.dgn

USER NAME =	DESIGNED - MI	REVISED -	STATE OF ILLINOIS DEPARTMENT OF TRANSPORTATION
	CHECKED - MMC	REVISED -	
PLOT SCALE =	DRAWN - MI	REVISED -	
PLOT DATE =	CHECKED - MMC	REVISED -	

TEMPORARY SOIL RETENTION SYSTEM
STRUCTURE NO. 097-0083

SHEET 4 OF 24 SHEETS

F.A.P. RTE.	SECTION	COUNTY	TOTAL SHEETS	SHEET NO.
328	105B-3	WHITE	71	38

CONTRACT NO. 78833

ILLINOIS | FED. AID PROJECT

6/5/2024 12:53:34 PM

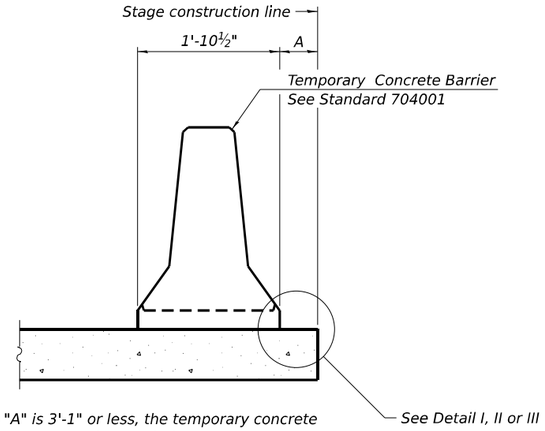

When "A" is 3'-1" or less, the temporary concrete barrier shall be restrained to the new slab according to Detail I, II or III. No restraint is required when "A" is greater than 3'-1".

NEW SLAB OR NEW DECK BEAM

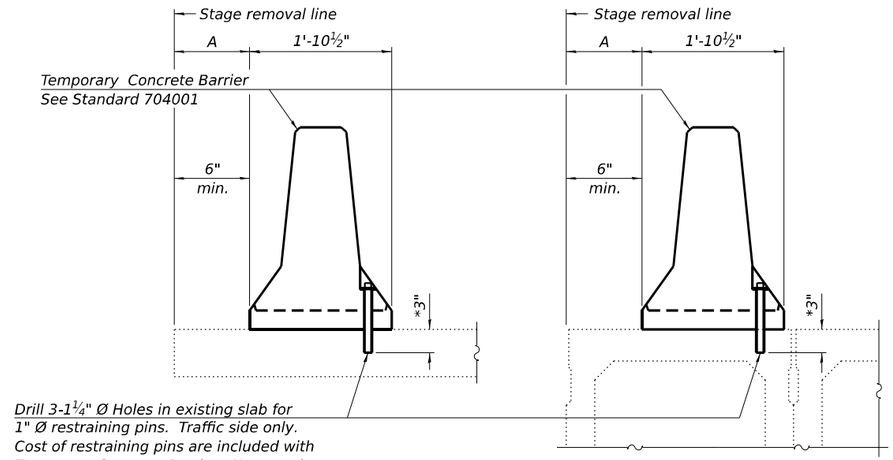

EXISTING SLAB

* When hot-mix asphalt wearing surface is present, embedment shall be 3" plus the wearing surface depth.

EXISTING DECK BEAM

SECTIONS THRU SLAB OR DECK BEAM

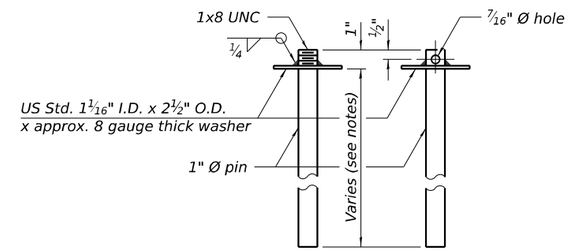

RESTRAINING PIN

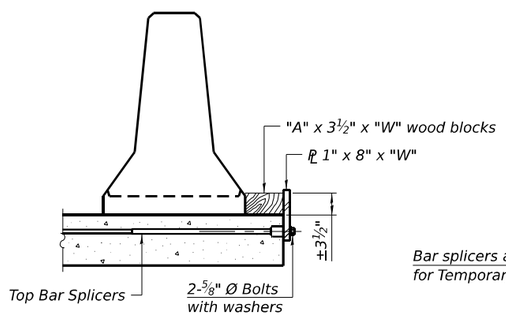

DETAIL I

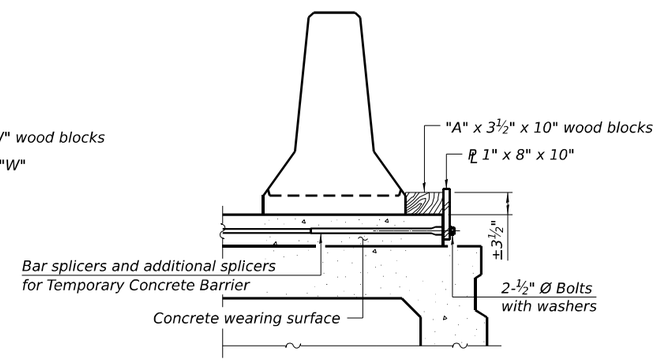

DETAIL II

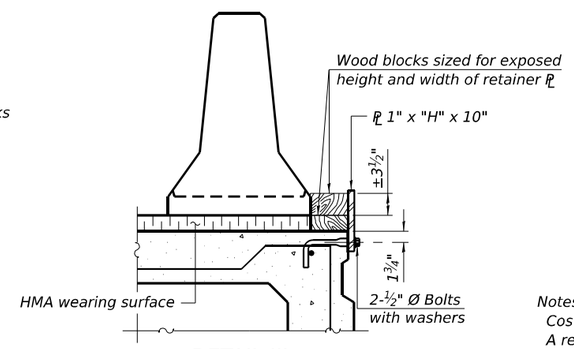

DETAIL III

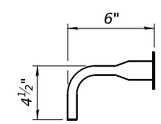

BAR SPLICER FOR #4 BAR - DETAIL III

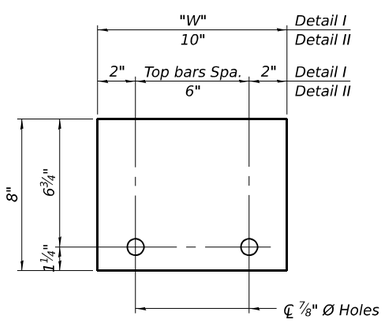

STEEL RETAINER PL 1" x 8" x "W"

(Detail I and II)

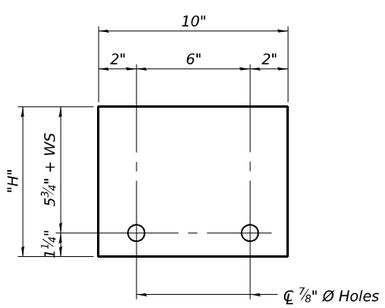

STEEL RETAINER PL 1" x "H" x 10"

(Detail III)

Notes:

Cost of retainer assembly is included with Temporary Concrete Barrier.

A retainer assembly shall be located at the approximate ℄ of each temporary concrete barrier.

The retainer plate shall not be removed until the concrete on the adjacent stage is ready to be poured. For Detail III applications the retainer plate shall not be removed until just prior to placing the adjacent beam.

When the 'A' dimension is less than 1½", the wood block shall be omitted and the barrier shall be placed in direct contact with the steel retainer plate. For deck beam applications the minimum required 'A' distance is 6" to accommodate the shear key clamping device.

Detail I - Installation for a new bridge deck or bridge slab.

Detail II - Installation for a new deck beam with an initial concrete wearing surface. Additional bar splicers shall be provided at 6'-0" centers and paired with the bar splicers of the concrete wearing surface reinforcement to accommodate the installation of the retainer assemblies. The cost of the additional bar splicers is included with the concrete wearing surface.

Detail III - Installation for a new deck beam with no initial wearing surface or with an initial hot-mix asphalt (HMA) wearing surface present. The deck beam directly beneath the temporary concrete barrier shall be fabricated with bar splicer inserts in the side of the beam, as detailed, to accommodate the installation of the retainer assemblies. A pair of bar splicers, 6" apart, shall be placed at 6'-0" centers along the length of the beam. The cost of the bar splicers is included with the deck beam.

RAILING CRITERIA

NCHRP 350 Test Level	3
Railing Weight (plf)	440

R-27

5-15-2023

MODEL: PLOT
FILE NAME: Y:\IDOT\1359-13_78833\CADD\SP SN 097-0083\0970083-78833-05-TCB.dgn

2/2/2024 10:42:03 AM

ESCA CONSULTANTS, INC.

USER NAME = nhc	DESIGNED - ELH	01/24	REVISED -	STATE OF ILLINOIS DEPARTMENT OF TRANSPORTATION	TEMPORARY CONCRETE BARRIER STRUCTURE NO. 097–0083
ESCA PROJECT NO. 1359.13	CHECKED - CTJ	01/24	REVISED -		
PLOT SCALE = 0.1667 ' / in.	DRAWN - NHC	01/24	REVISED -		
PLOT DATE = 2/2/2024	CHECKED - ELH	01/24	REVISED -		SHEET 5 OF 24 SHEETS

F.A.P. RTE.	SECTION	COUNTY	TOTAL SHEETS	SHEET NO.
328	105B-3	WHITE	71	39
		CONTRACT NO. 78833		
	ILLINOIS	FED. AID PROJECT		

BEAM 1

Location	Station	Offset (ft.)	Theoretical Grade Elevations	Theoretical Grade Elevations Adjusted For Dead Load Deflection
Bk. N. Abut.	954+15.00	-15.00	387.46	387.46
℄ Brg. N. Abut.	954+16.83	-15.00	387.47	387.47
A	954+26.83	-15.00	387.49	387.56
B	954+36.83	-15.00	387.50	387.63
C	954+46.83	-15.00	387.51	387.67
D	954+56.83	-15.00	387.51	387.67
E	954+66.83	-15.00	387.50	387.63
F	954+76.83	-15.00	387.49	387.56
℄ Brg. S. Abut.	954+87.17	-15.00	387.47	387.47
Bk. S. Abut.	954+89.00	-15.00	387.46	387.46

BEAM 2

Location	Station	Offset (ft.)	Theoretical Grade Elevations	Theoretical Grade Elevations Adjusted For Dead Load Deflection
Bk. N. Abut.	954+15.00	-9.00	387.57	387.57
℄ Brg. N. Abut.	954+16.83	-9.00	387.57	387.57
A	954+26.83	-9.00	387.59	387.66
B	954+36.83	-9.00	387.60	387.73
C	954+46.83	-9.00	387.61	387.77
D	954+56.83	-9.00	387.61	387.77
E	954+66.83	-9.00	387.60	387.74
F	954+76.83	-9.00	387.59	387.67
℄ Brg. S. Abut.	954+87.17	-9.00	387.57	387.57
Bk. S. Abut.	954+89.00	-9.00	387.57	387.57

BEAM 3

Location	Station	Offset (ft.)	Theoretical Grade Elevations	Theoretical Grade Elevations Adjusted For Dead Load Deflection
Bk. N. Abut.	954+15.00	-3.00	387.66	387.66
℄ Brg. N. Abut.	954+16.83	-3.00	387.66	387.66
A	954+26.83	-3.00	387.68	387.75
B	954+36.83	-3.00	387.69	387.82
C	954+46.83	-3.00	387.70	387.86
D	954+56.83	-3.00	387.70	387.86
E	954+66.83	-3.00	387.69	387.83
F	954+76.83	-3.00	387.68	387.76
℄ Brg. S. Abut.	954+87.17	-3.00	387.66	387.66
Bk. S. Abut.	954+89.00	-3.00	387.66	387.66

STAGE CONSTRUCTION JOINT

Location	Station	Offset (ft.)	Theoretical Grade Elevations	Theoretical Grade Elevations Adjusted For Dead Load Deflection
Bk. N. Abut.	954+15.00	-0.56	387.70	387.70
℄ Brg. N. Abut.	954+16.83	-0.56	387.70	387.70
A	954+26.83	-0.56	387.72	387.79
B	954+36.83	-0.56	387.73	387.86
C	954+46.83	-0.56	387.74	387.90
D	954+56.83	-0.56	387.74	387.90
E	954+66.83	-0.56	387.73	387.86
F	954+76.83	-0.56	387.72	387.79
℄ Brg. S. Abut.	954+87.17	-0.56	387.70	387.70
Bk. S. Abut.	954+89.00	-0.56	387.70	387.70

℄ ROADWAY & PROFILE GRADE LINE

Location	Station	Offset (ft.)	Theoretical Grade Elevations	Theoretical Grade Elevations Adjusted For Dead Load Deflection
Bk. N. Abut.	954+15.00	0.00	387.70	387.70
℄ Brg. N. Abut.	954+16.83	0.00	387.71	387.71
A	954+26.83	0.00	387.73	387.80
B	954+36.83	0.00	387.74	387.87
C	954+46.83	0.00	387.75	387.91
D	954+56.83	0.00	387.75	387.91
E	954+66.83	0.00	387.74	387.87
F	954+76.83	0.00	387.73	387.80
℄ Brg. S. Abut.	954+87.17	0.00	387.71	387.71
Bk. S. Abut.	954+89.00	0.00	387.70	387.70

BEAM 4

Location	Station	Offset (ft.)	Theoretical Grade Elevations	Theoretical Grade Elevations Adjusted For Dead Load Deflection
Bk. N. Abut.	954+15.00	3.00	387.66	387.66
℄ Brg. N. Abut.	954+16.83	3.00	387.66	387.66
A	954+26.83	3.00	387.68	387.75
B	954+36.83	3.00	387.69	387.82
C	954+46.83	3.00	387.70	387.86
D	954+56.83	3.00	387.70	387.86
E	954+66.83	3.00	387.69	387.83
F	954+76.83	3.00	387.68	387.76
℄ Brg. S. Abut.	954+87.17	3.00	387.66	387.66
Bk. S. Abut.	954+89.00	3.00	387.66	387.66

BEAM 5

Location	Station	Offset (ft.)	Theoretical Grade Elevations	Theoretical Grade Elevations Adjusted For Dead Load Deflection
Bk. N. Abut.	954+15.00	9.00	387.57	387.57
℄ Brg. N. Abut.	954+16.83	9.00	387.57	387.57
A	954+26.83	9.00	387.59	387.66
B	954+36.83	9.00	387.60	387.73
C	954+46.83	9.00	387.61	387.77
D	954+56.83	9.00	387.61	387.77
E	954+66.83	9.00	387.60	387.74
F	954+76.83	9.00	387.59	387.67
℄ Brg. S. Abut.	954+87.17	9.00	387.57	387.57
Bk. S. Abut.	954+89.00	9.00	387.57	387.57

BEAM 6

Location	Station	Offset (ft.)	Theoretical Grade Elevations	Theoretical Grade Elevations Adjusted For Dead Load Deflection
Bk. N. Abut.	954+15.00	15.00	387.46	387.46
℄ Brg. N. Abut.	954+16.83	15.00	387.47	387.47
A	954+26.83	15.00	387.49	387.56
B	954+36.83	15.00	387.50	387.63
C	954+46.83	15.00	387.51	387.67
D	954+56.83	15.00	387.51	387.67
E	954+66.83	15.00	387.50	387.63
F	954+76.83	15.00	387.49	387.56
℄ Brg. S. Abut.	954+87.17	15.00	387.47	387.47
Bk. S. Abut.	954+89.00	15.00	387.46	387.46

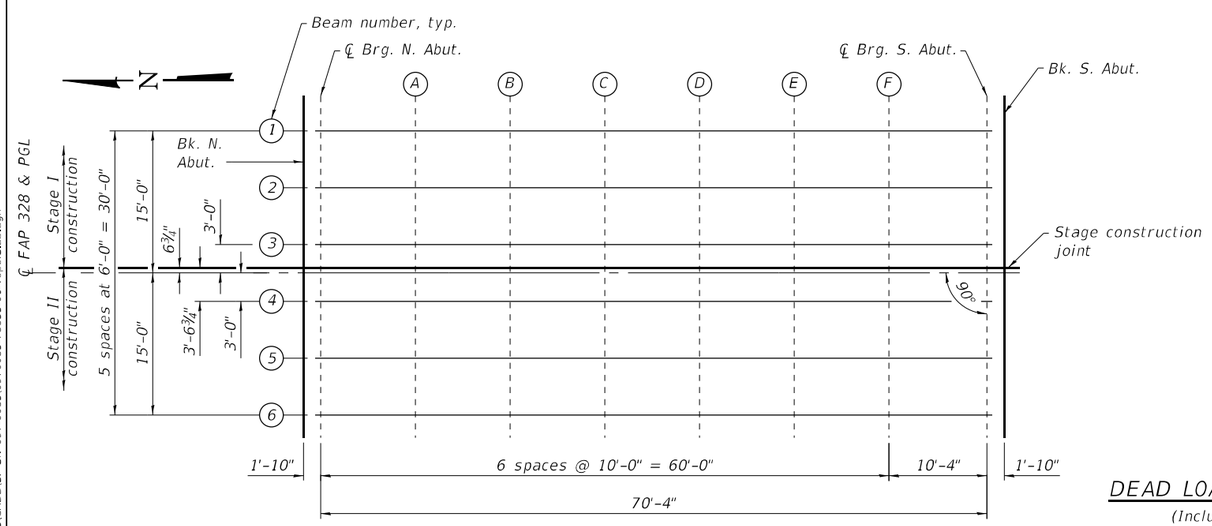

PLAN

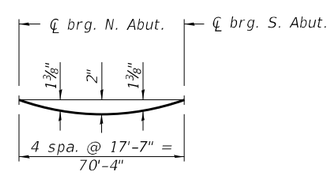

DEAD LOAD DEFLECTION DIAGRAM

(Includes weight of concrete only.)

Note:
The above deflections are not to be used in the field if the Engineer is working from the grade elevations adjusted for dead load deflections as shown on this sheet.

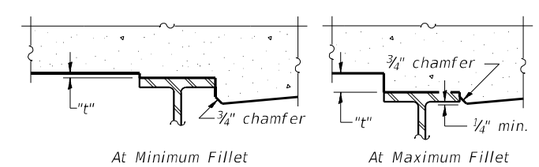

At Minimum Fillet At Maximum Fillet

To determine "t": After all structural steel has been erected, elevations of the top flanges of the beams shall be taken at intervals shown on this sheet. These elevations subtracted from the "Theoretical Grade Elevations Adjusted for Dead Load Deflection" shown on this sheet, minus slab thickness, equals the fillet heights "t" above top flange of beams.

FILLET HEIGHTS

MODEL: PLOT
FILE NAME: Y:\IDOT\1359-13_78833\CADD\SP SN 097-0083\0970083-78833-06-TopofSlab.dgn

ESCA CONSULTANTS, INC.

USER NAME = nhc	DESIGNED - CTJ 02/24	REVISED -	STATE OF ILLINOIS DEPARTMENT OF TRANSPORTATION
ESCA PROJECT NO. 1359.13	CHECKED - ELH 02/24	REVISED -	
PLOT SCALE = 0:2 ':" / in.	DRAWN - NHC 04/24	REVISED -	
PLOT DATE = 6/5/2024	CHECKED - ELH 04/24	REVISED -	

TOP OF SLAB ELEVATIONS
STRUCTURE NO. 097-0083
SHEET 6 OF 24 SHEETS

F.A.P. RTE.	SECTION	COUNTY	TOTAL SHEETS	SHEET NO.
328	105B-3	WHITE	71	40
		CONTRACT NO. 78833		
		ILLINOIS FED. AID PROJECT		

6/5/2024 8:05:16 AM

EAST EDGE OF SHOULDER

Location	Station	Offset	Theoretical Grade Elevations
N. End of N. Appr. Slab	953+86.00	-16.00	387.35
A1	953+96.00	-16.00	387.39
A2	954+06.00	-16.00	387.42
S. End of N. Appr. Slab	954+16.00	-16.00	387.44

EAST EDGE OF PAVEMENT

Location	Station	Offset	Theoretical Grade Elevations
N. End of N. Appr. Slab	953+86.00	-12.00	387.43
A1	953+96.00	-12.00	387.47
A2	954+06.00	-12.00	387.50
S. End of N. Appr. Slab	954+16.00	-12.00	387.52

STAGE CONST. JOINT

Location	Station	Offset	Theoretical Grade Elevations
N. End of N. Appr. Slab	953+86.00	-0.56	387.60
A1	953+96.00	-0.56	387.64
A2	954+06.00	-0.56	387.67
S. End of N. Appr. Slab	954+16.00	-0.56	387.70

℄ FAP 328 & P.G.L

Location	Station	Offset	Theoretical Grade Elevations
N. End of N. Appr. Slab	953+86.00	0.00	387.61
A1	953+96.00	0.00	387.65
A2	954+06.00	0.00	387.68
S. End of N. Appr. Slab	954+16.00	0.00	387.70

WEST EDGE OF PAVEMENT

Location	Station	Offset	Theoretical Grade Elevations
N. End of N. Appr. Slab	953+86.00	12.00	387.43
A1	953+96.00	12.00	387.47
A2	954+06.00	12.00	387.50
S. End of N. Appr. Slab	954+16.00	12.00	387.52

WEST EDGE OF SHOULDER

Location	Station	Offset	Theoretical Grade Elevations
N. End of N. Appr. Slab	953+86.00	16.00	387.35
A1	953+96.00	16.00	387.39
A2	954+06.00	16.00	387.42
S. End of N. Appr. Slab	954+16.00	16.00	387.44

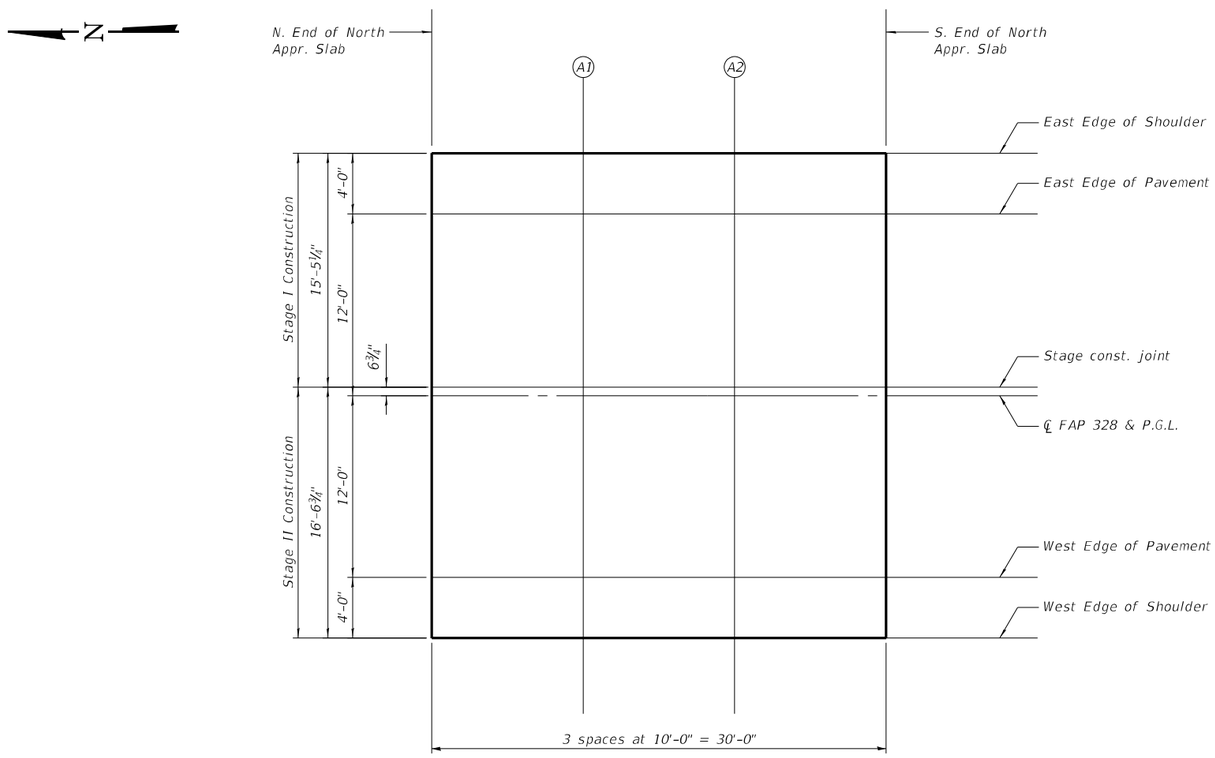

PLAN

North Approach

MODEL: Default
FILE NAME: pw:\\kcg-pw-01.bentley.com:kcg-pw-01\Documents\IDOT Projects\20-1109.13 (SS4)\0_IDOT\Structures\0970083-78833-007-NApprSlabElevs
6/5/2024 12:53:41 PM

USER NAME =	DESIGNED - MI	REVISED -	
	CHECKED - MLC	REVISED -	
PLOT SCALE =	DRAWN - MI	REVISED -	
PLOT DATE =	CHECKED - MLC	REVISED -	

STATE OF ILLINOIS
DEPARTMENT OF TRANSPORTATION

TOP OF NORTH APPROACH SLAB ELEVATIONS
STRUCTURE NO. 097-0083

SHEET 7 OF 24 SHEETS

F.A.P. RTE.	SECTION	COUNTY	TOTAL SHEETS	SHEET NO.
328	105B-3	WHITE	71	41

CONTRACT NO. 78833

ILLINOIS | FED. AID PROJECT

EAST EDGE OF SHOULDER

Location	Station	Offset	Theoretical Grade Elevations
N. End of S. Appr. Slab	954+88.00	-16.00	387.44
A3	954+98.00	-16.00	387.42
A4	955+08.00	-16.00	387.39
S. End of S. Appr. Slab	955+18.00	-16.00	387.35

EAST EDGE OF PAVEMENT

Location	Station	Offset	Theoretical Grade Elevations
N. End of S. Appr. Slab	954+88.00	-12.00	387.52
A3	954+98.00	-12.00	387.50
A4	955+08.00	-12.00	387.47
S. End of S. Appr. Slab	955+18.00	-12.00	387.43

STAGE CONST. JOINT

Location	Station	Offset	Theoretical Grade Elevations
N. End of S. Appr. Slab	954+88.00	-0.56	387.70
A3	954+98.00	-0.56	387.67
A4	955+08.00	-0.56	387.64
S. End of S. Appr. Slab	955+18.00	-0.56	387.60

℄ FAP 328 & P.G.L

Location	Station	Offset	Theoretical Grade Elevations
N. End of S. Appr. Slab	954+88.00	0.00	387.70
A3	954+98.00	0.00	387.68
A4	955+08.00	0.00	387.65
S. End of S. Appr. Slab	955+18.00	0.00	387.61

WEST EDGE OF PAVEMENT

Location	Station	Offset	Theoretical Grade Elevations
N. End of S. Appr. Slab	954+88.00	12.00	387.52
A3	954+98.00	12.00	387.50
A4	955+08.00	12.00	387.47
S. End of S. Appr. Slab	955+18.00	12.00	387.43

WEST EDGE OF SHOULDER

Location	Station	Offset	Theoretical Grade Elevations
N. End of S. Appr. Slab	954+88.00	16.00	387.44
A3	954+98.00	16.00	387.42
A4	955+08.00	16.00	387.39
S. End of S. Appr. Slab	955+18.00	16.00	387.35

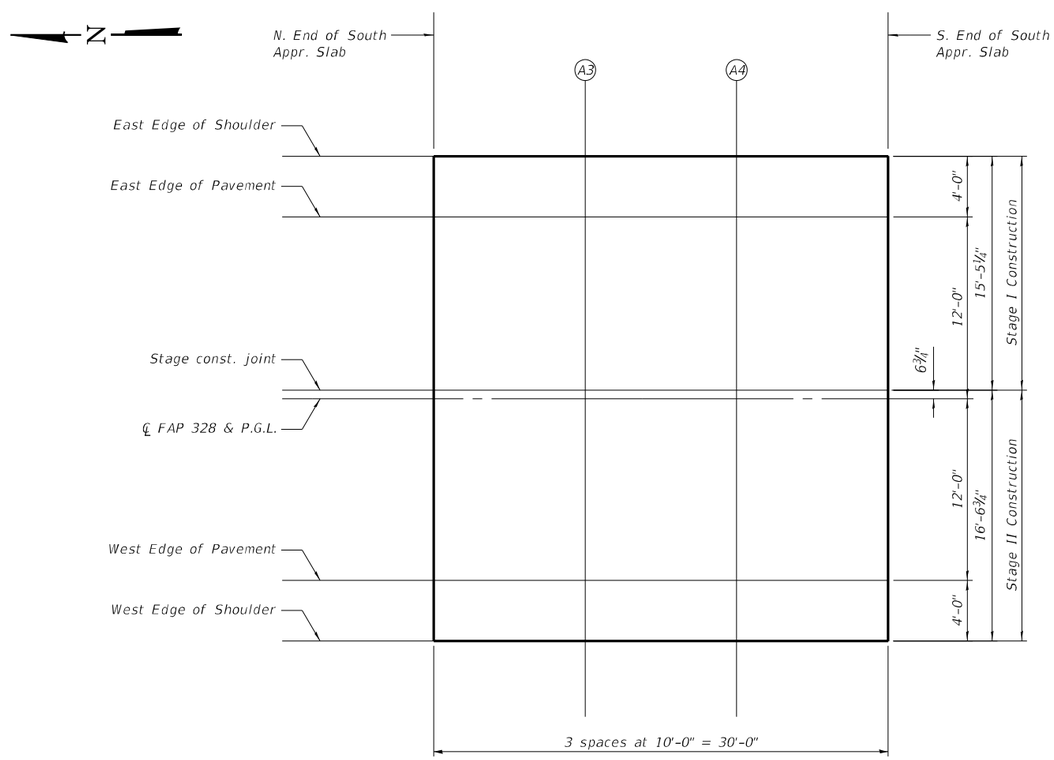

PLAN

South Approach

MODEL: Default
FILE NAME: pw:\\keg-pw.bentley.com:keg-pw-01\Documents\IDOT Projects\20-1109.13 (SS4)\0_IDOT\Structures\0970083-78833-008-SApprSlabElevs.dgn
7/15/2024 8:23:00 AM

USER NAME =	DESIGNED - MI	REVISED -	
	CHECKED - MLC	REVISED -	
PLOT SCALE =	DRAWN - MI	REVISED -	
PLOT DATE =	CHECKED - MLC	REVISED -	

STATE OF ILLINOIS
DEPARTMENT OF TRANSPORTATION

TOP OF SOUTH APPROACH SLAB ELEVATIONS
STRUCTURE NO. 097-0083

SHEET 8 OF 24 SHEETS

F.A.P. RTE.	SECTION	COUNTY	TOTAL SHEETS	SHEET NO.
328	105B-3	WHITE	71	42
		CONTRACT NO. 78833		
		ILLINOIS	FED. AID PROJECT	

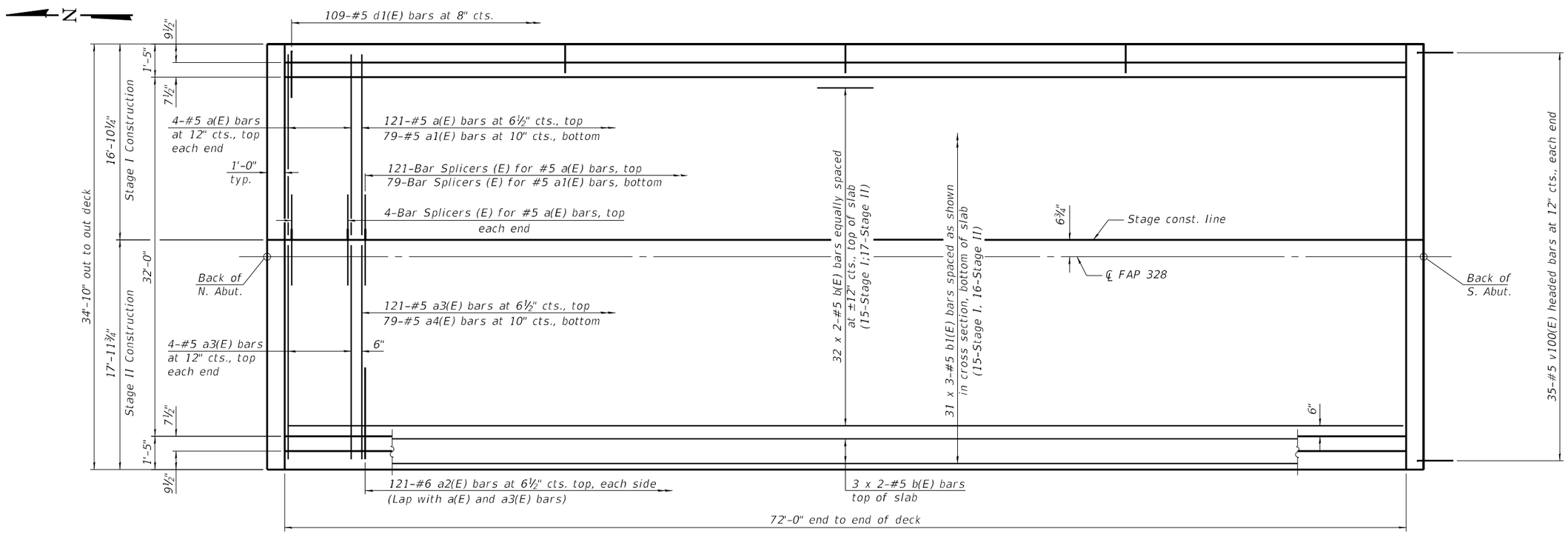

MINIMUM BAR LAP

#5 bar = 3'-6"

PLAN

Notes:
See sheet 10 of 24 for superstructure details and Bill of Material.
Bars indicated thus 20 x 3-#5 etc. indicates 20 lines of bars with 3 lengths per line.

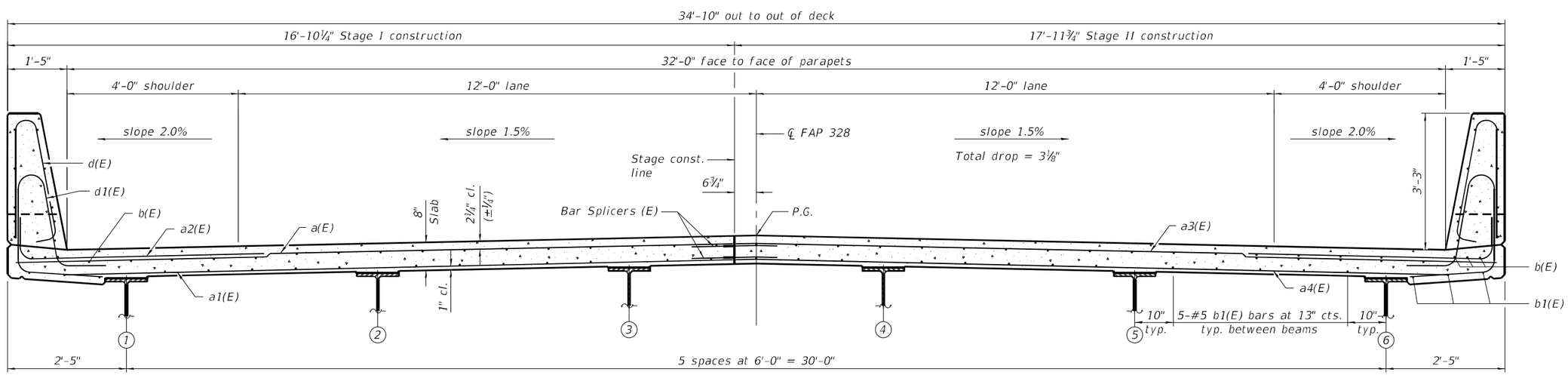

CROSS SECTION

(Looking South)

MODEL: Default
FILE NAME: pw:\\keg-pw.bentley.com:keg-pw-01\Documents\IDOT Projects\20-1109.13 (SS4)\0_IDOT\Structures\0970083-78833-009-Superstructure
6/5/2024 12:53:49 PM

USER NAME =	DESIGNED - MI	REVISED -	
	CHECKED - MLC	REVISED -	
PLOT SCALE =	DRAWN - MI	REVISED -	
PLOT DATE =	CHECKED - MLC	REVISED -	

STATE OF ILLINOIS
DEPARTMENT OF TRANSPORTATION

SUPERSTRUCTURE
STRUCTURE NO. 097-0083

SHEET 9 OF 24 SHEETS

F.A.P. RTE.	SECTION	COUNTY	TOTAL SHEETS	SHEET NO.
328	105B-3	WHITE	71	43
		CONTRACT NO. 78833		
	ILLINOIS	FED. AID PROJECT		

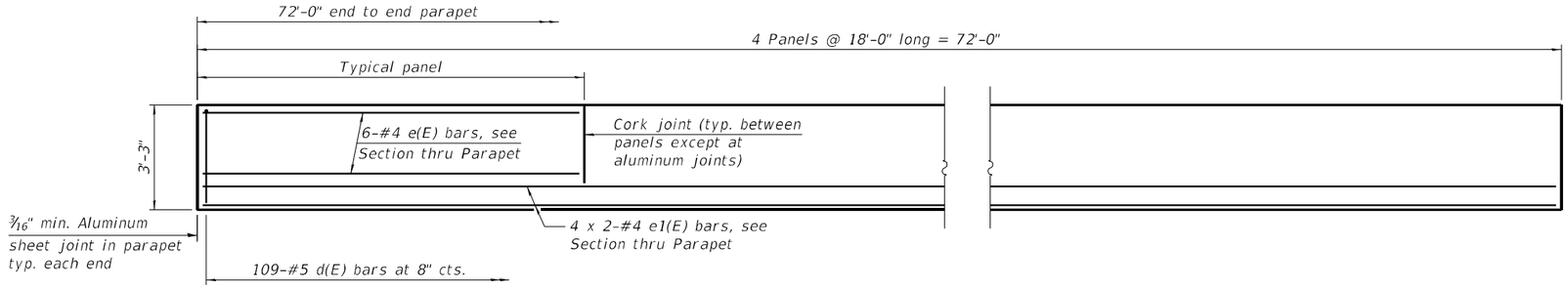

INSIDE ELEVATION OF PARAPET

MINIMUM BAR LAP
#4 bar = 2'-5"

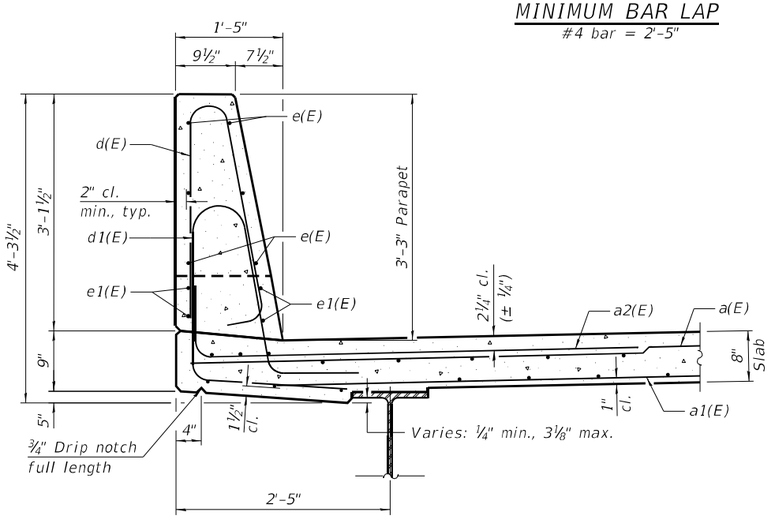

SECTION THRU PARAPET

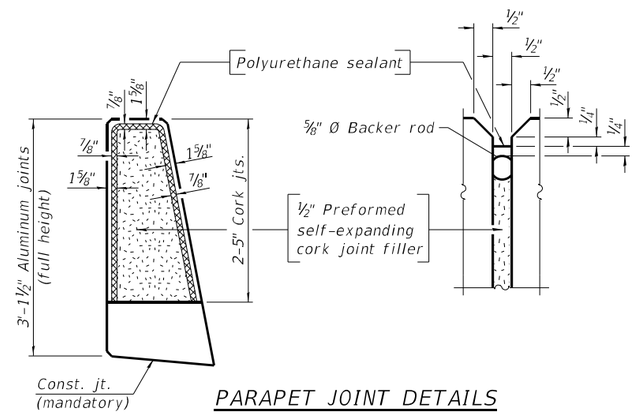

PARAPET JOINT DETAILS

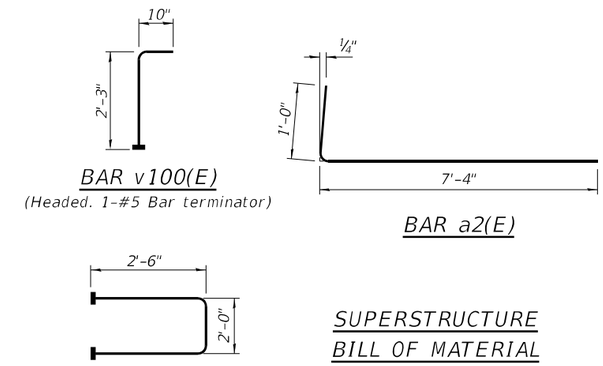

BAR v100(E)
(Headed. 1-#5 Bar terminator)

BAR a2(E)

BAR s10(E)
(Headed. 2-#5 Bar terminators)

Notes:

The 3/16" min. aluminum sheet shall be ASTM B 209 alloy 3003-H14 and coated with 5 mils of either bitumen paint or epoxy paint to minimize reaction with wet concrete. Cost included with Concrete Superstructure.

The polyurethane sealant shall be according to Article 1050.04 of the Std. Spec. and the color shall be gray.

Bar terminators, paid for separately. See Total Bill of Material.

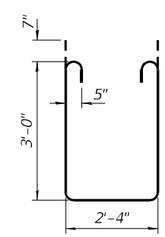

BAR s11(E)

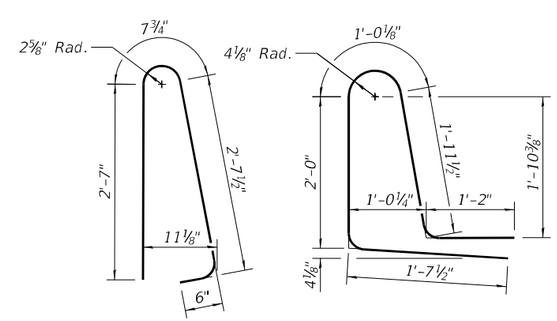

BAR d(E)

BAR d1(E)

SUPERSTRUCTURE BILL OF MATERIAL

Bar	No.	Size	Length	Shape
a(E)	129	#5	16'-7"	
a1(E)	79	#5	15'-5"	
a2(E)	242	#6	8'-4"	
a3(E)	129	#5	17'-8"	
a4(E)	79	#5	16'-5"	
b(E)	76	#5	37'-7"	
b1(E)	93	#5	26'-3"	
d(E)	218	#5	6'-5"	
d1(E)	218	#5	7'-9"	
e(E)	48	#4	17'-8"	
e1(E)	16	#4	37'-1"	
m10(E)	8	#6	16'-7"	
m11(E)	24	#6	5'-8"	
m12(E)	12	#6	2'-1"	
m13(E)	8	#6	17'-8"	
m14(E)	6	#6	2'-2"	
m15(E)	6	#6	3'-3"	
s10(E)	72	#5	7'-0"	
s11(E)	72	#5	9'-6"	
v100(E)	70	#5	3'-1"	
Reinforcement Bars, Epoxy Coated			Lbs.	22,140
Concrete Superstructure			Cu. Yd.	113.0
Bar Terminator			Each	214

Bars indicated thus 1 x 2-#4 etc. indicates 1 line of bars with 2 lengths per line.

MODEL: Default
FILE NAME: pw:\\kegpw.bentley.com:kegpw-01\Documents\IDOT Projects\20-1109.13 (SS4)\0_IDOT\Structures\0970083-78833-010-SuperDetails

USER NAME =	DESIGNED - MI	REVISED -	
	CHECKED - MLC	REVISED -	
PLOT SCALE =	DRAWN - MI	REVISED -	
PLOT DATE =	CHECKED - MLC	REVISED -	

STATE OF ILLINOIS
DEPARTMENT OF TRANSPORTATION

SUPERSTRUCTURE DETAILS
STRUCTURE NO. 097-0083

SHEET 10 OF 24 SHEETS

F.A.P. RTE.	SECTION	COUNTY	TOTAL SHEETS	SHEET NO.
328	105B-3	WHITE	71	44
		CONTRACT NO. 78833		
		ILLINOIS	FED. AID PROJECT	

6/5/2024 12:53:53 PM

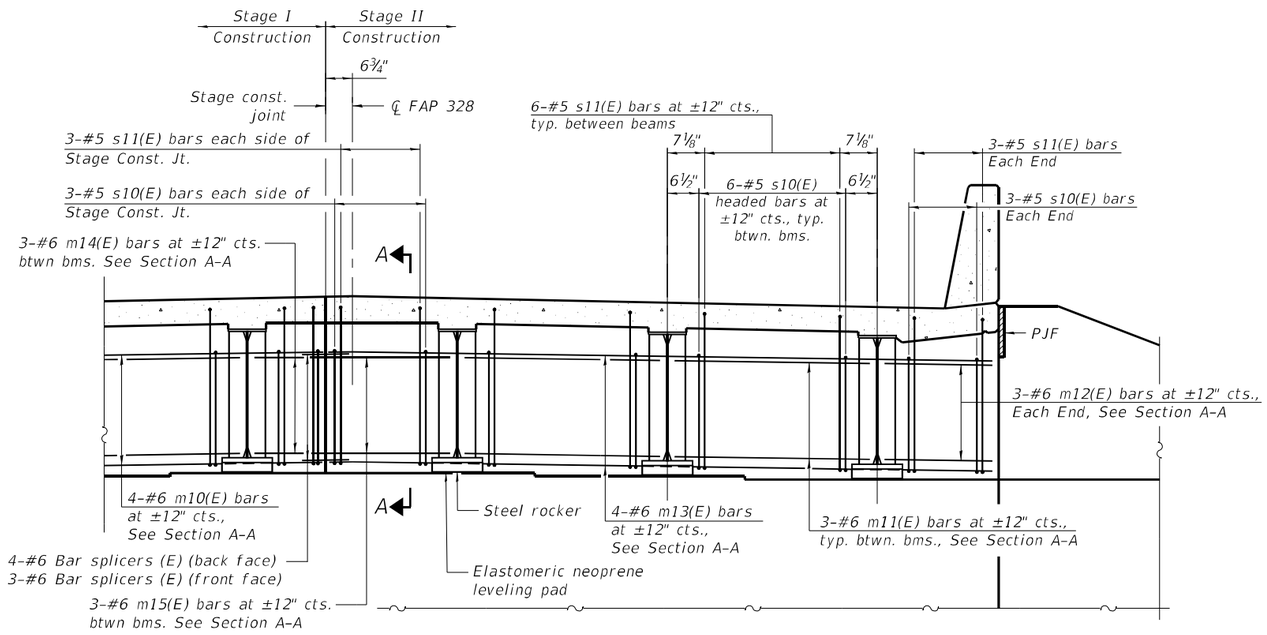

DIAPHRAGM AT ABUTMENT

(Looking South at South Abutment; North Abutment similar)

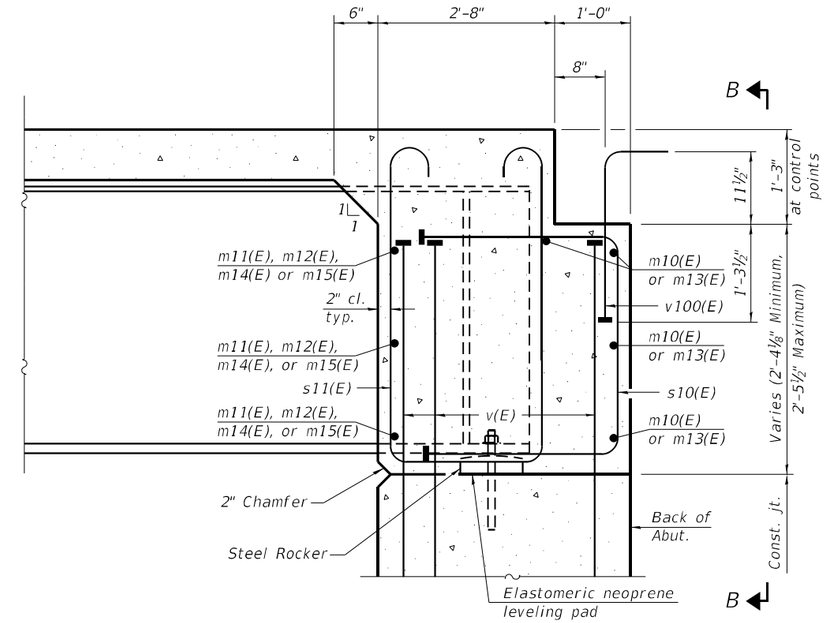

SECTION A-A

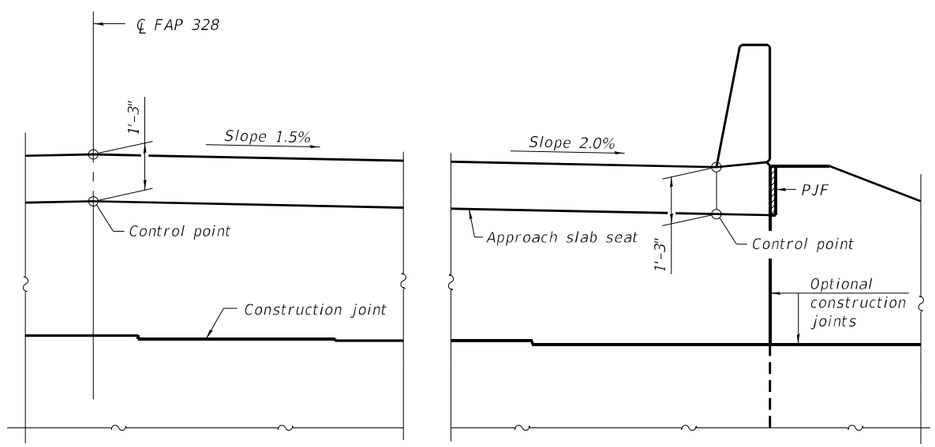

VIEW B-B

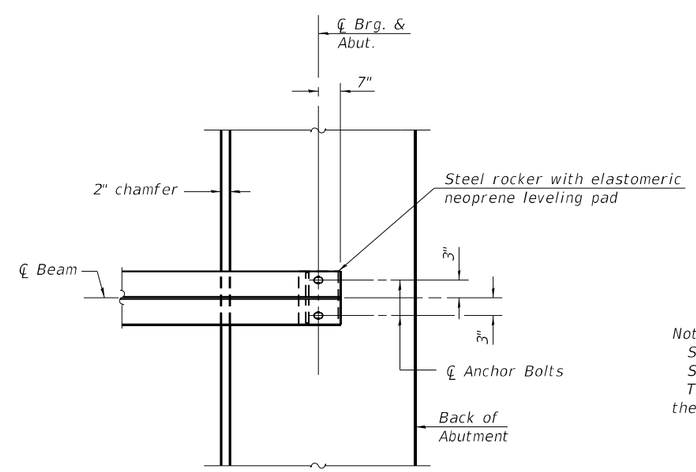

PLAN AT ABUTMENT

(Showing bottom flange of beam)

Notes:
See sheet 10 of 24 for superstructure details and Bill of Material.
See sheet 12 of 24 for PJF details.
The approach slab seat shall have a constant slope determined from the control points shown.

MODEL: Default
FILE NAME: pw:\\keg-pw.bentley.com:keg-pw-01\Documents\IDOT Projects\20-1109.13 (SS4)\0_IDOT\Structures\0970083-78833-011-DiaphragmDetails
6/5/2024 12:53:56 PM

USER NAME =	DESIGNED - MI	REVISED -	
	CHECKED - MLC	REVISED -	
PLOT SCALE =	DRAWN - MI	REVISED -	
PLOT DATE =	CHECKED - MLC	REVISED -	

STATE OF ILLINOIS
DEPARTMENT OF TRANSPORTATION

DIAPHRAGM DETAILS
STRUCTURE NO. 097-0083

SHEET 11 OF 24 SHEETS

F.A.P. RTE.	SECTION	COUNTY	TOTAL SHEETS	SHEET NO.
328	105B-3	WHITE	71	45

CONTRACT NO. 78833

ILLINOIS | FED. AID PROJECT

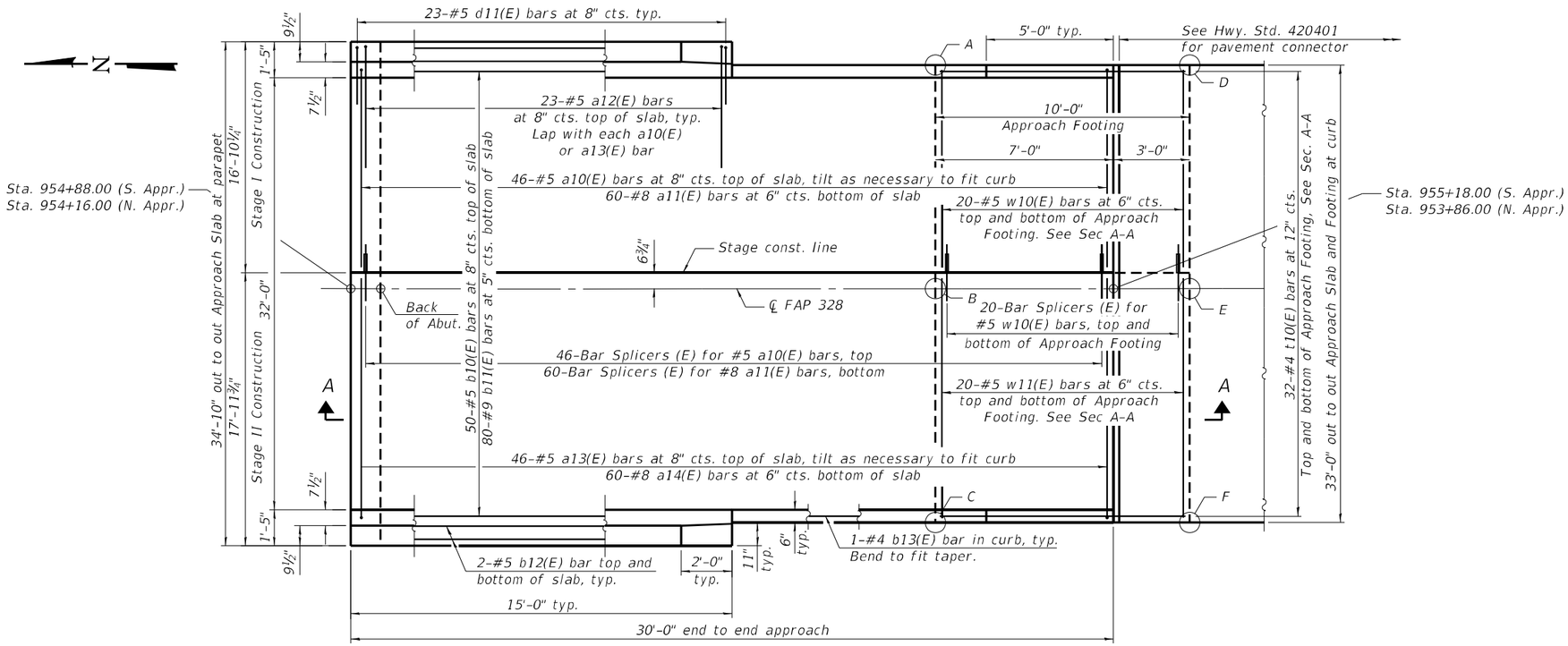

PLAN

(Showing South Approach; North Approach similar by 180-degree rotation)

TOP AND BOTTOM ELEVATIONS FOR APPROACH FOOTING

North Approach			South Approach		
Point/ Location	Top	Bottom	Point/ Location	Top	Bottom
A - SW	386.12	385.28	A - NE	386.12	385.28
B - S ℄	386.39	385.55	B - N ℄	386.39	385.55
C - SE	386.12	385.28	C - NW	386.12	385.28
D - NW	386.08	385.25	D - SE	386.08	385.25
E - N ℄	386.35	385.52	E - S ℄	386.35	385.52
F - NE	386.08	385.25	F - SW	386.08	385.25

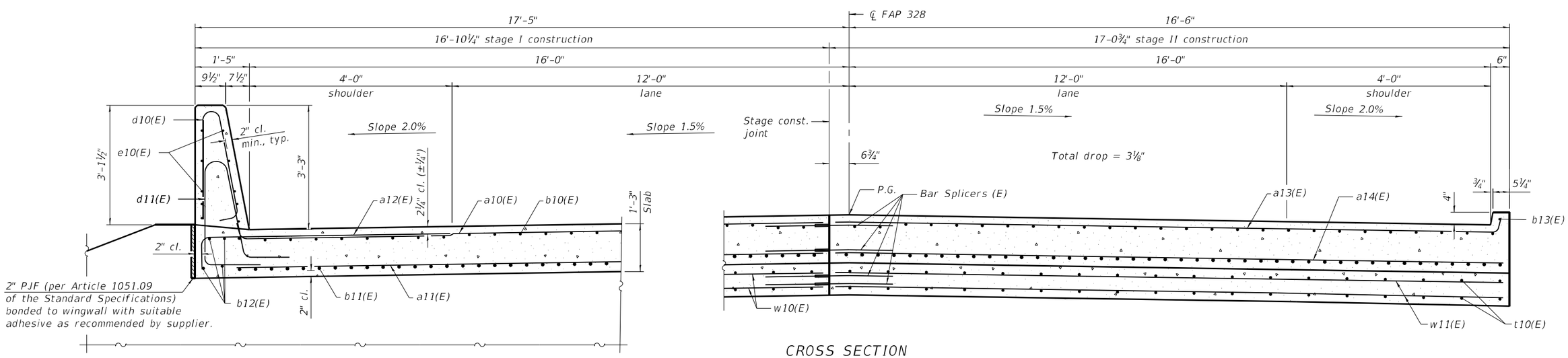

CROSS SECTION

(Looking South)

(Sheet 1 of 2)

USER NAME =	DESIGNED - MI	REVISED -	
	CHECKED - MLC	REVISED -	
PLOT SCALE =	DRAWN - MI	REVISED -	
PLOT DATE =	CHECKED - MLC	REVISED -	

STATE OF ILLINOIS
DEPARTMENT OF TRANSPORTATION

BRIDGE APPROACH SLAB DETAILS
STRUCTURE NO. 097-0083

SHEET 12 OF 24 SHEETS

F.A.P. RTE.	SECTION	COUNTY	TOTAL SHEETS	SHEET NO.
328	105B-3	WHITE	71	46

CONTRACT NO. 78833

ILLINOIS | FED. AID PROJECT

MODEL: Default
FILE NAME: pw:\\keg-pw.bentley.com:keg-pw-01\Documents\IDOT Projects\20-1109.13 (SS4)\0_IDOT\Structures\0970083-78833-012-013-bprSlabDetails
6/5/2024 12:54:00 PM

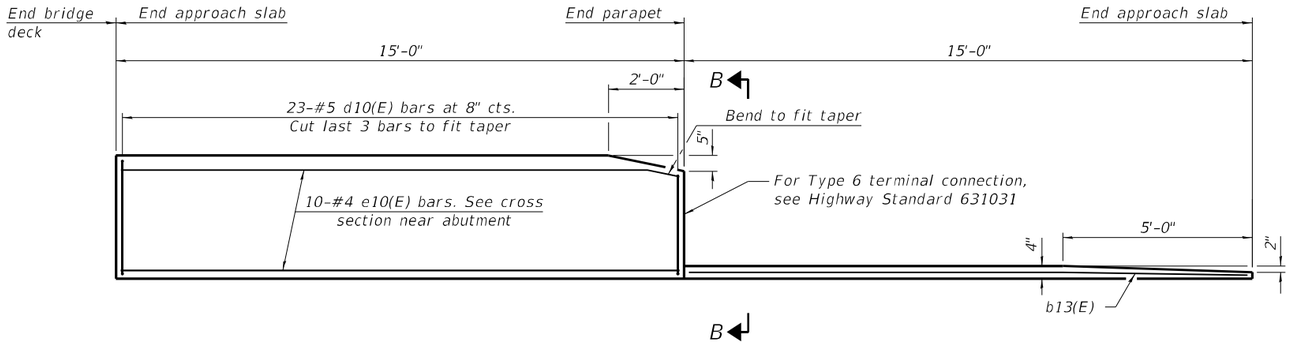

INSIDE ELEVATION OF PARAPET AND CURB

Notes:

The joint opening shall be adjusted for temperature per Article 520.04 of the Standard Specifications. However, since this detail is for jointless structures, the length of bridge used to calculate the adjustment shall be equal to half the total bridge length plus the length of the bridge approach slab.

Parapet concrete shall be paid for as Concrete Superstructure.

Approach slab shall be paid for as Concrete Superstructure (Approach Slab).

Approach footing concrete shall be paid for as Concrete Structures.

The approach footing maximum applied service bearing pressure (Qmax) = 2.0 ksf.

Cost of excavation for approach footing included with Concrete Structures.

For Granular Backfill for Structures and drainage treatment details, see sheet 2 of 24.

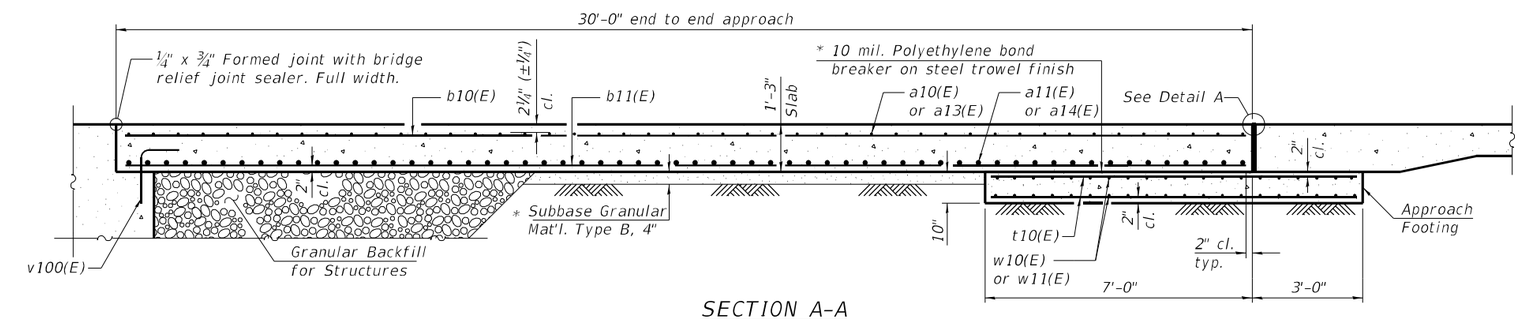

SECTION A-A

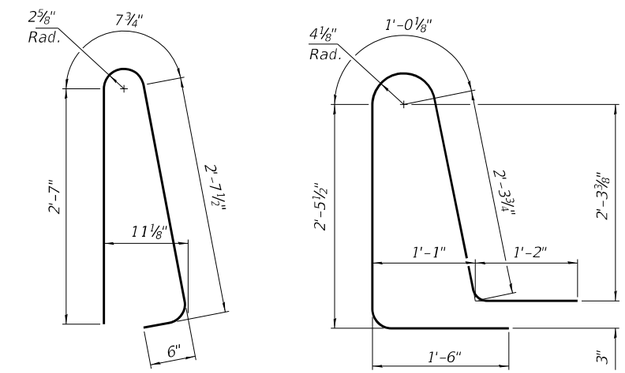

BAR d10(E)

BAR d11(E)

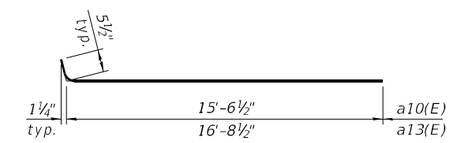

BARS a10(E) & a13(E)

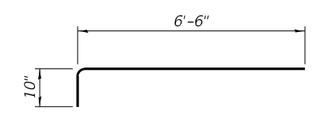

BAR a12(E)

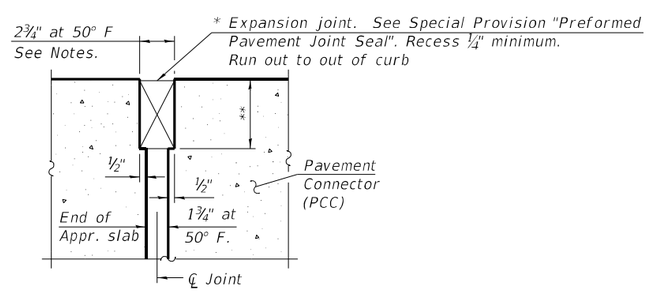

DETAIL A

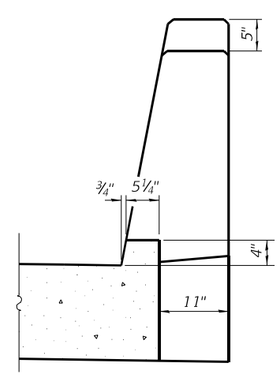

VIEW B-B

TWO APPROACHES
BILL OF MATERIAL

Bar	No.	Size	Length	Shape
a10(E)	92	#5	16'-0"	
a11(E)	120	#8	15'-7"	
a12(E)	92	#5	7'-4"	
a13(E)	92	#5	17'-2"	
a14(E)	120	#8	16'-9"	
b10(E)	100	#5	29'-8"	
b11(E)	160	#9	29'-8"	
b12(E)	16	#5	14'-8"	
b13(E)	4	#4	14'-8"	
d10(E)	92	#5	6'-5"	
d11(E)	92	#5	8'-6"	
e10(E)	40	#4	14'-8"	
t10(E)	128	#4	9'-8"	
w10(E)	80	#5	15'-7"	
w11(E)	80	#5	16'-9"	
Concrete Superstructure			Cu. Yd.	7.8
Concrete Superstructure (Approach Slab)			Cu. Yd.	95.0
Concrete Structures			Cu. Yd.	20.4
Reinforcement Bars, Epoxy Coated			Pound	39,120

* Cost included with Concrete Superstructure (Approach Slab).

** Per manufacturer recommendations

(Sheet 2 of 2)

USER NAME =	DESIGNED - MI	REVISED -	
	CHECKED - MLC	REVISED -	
PLOT SCALE =	DRAWN - MI	REVISED -	
PLOT DATE =	CHECKED - MLC	REVISED -	

STATE OF ILLINOIS
DEPARTMENT OF TRANSPORTATION

BRIDGE APPROACH SLAB DETAILS
STRUCTURE NO. 097-0083

SHEET 13 OF 24 SHEETS

F.A.P. RTE.	SECTION	COUNTY	TOTAL SHEETS	SHEET NO.
328	105B-3	WHITE	71	47

CONTRACT NO. 78833

ILLINOIS | FED. AID PROJECT

MODEL: Default
FILE NAME: pw:\\keg-pw.bentley.com:keg-pw-01\Documents\IDOT Projects\20-1109.13 (SS4)\0_IDOT\Structures\0970083-78833-012-013-ApprSlabDetails

6/5/2024 12:54:01 PM

Notes:
See Sheet 15 of 24 for additional steel details.
All diaphragms shall be installed as steel is erected and secured with erection pins and bolts except as otherwise noted. Individual diaphragms at supports may be temporarily disconnected to install bearing anchor bolts.
Load carrying components designated (CVN) shall conform to the Charpy-V-Notch Impact Energy Requirement, Zone 2.
The structural steel of the beams and bearing stiffeners shall be M270 Grade 50.

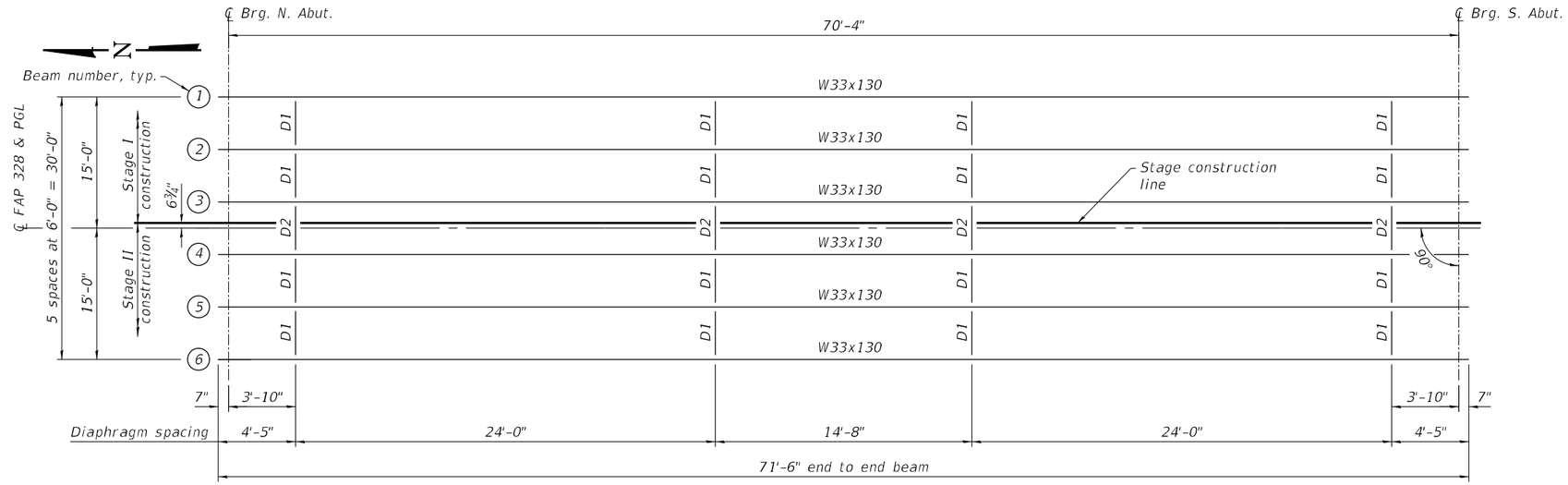

FRAMING PLAN

TOP OF BEAM ELEVATIONS

(For fabrication only)

Beam	℄ Brg. N. Abut.	℄ Brg. S. Abut.
1	386.74	386.74
2	386.84	386.84
3	386.93	386.93
4	386.93	386.93
5	386.84	386.84
6	386.74	386.74

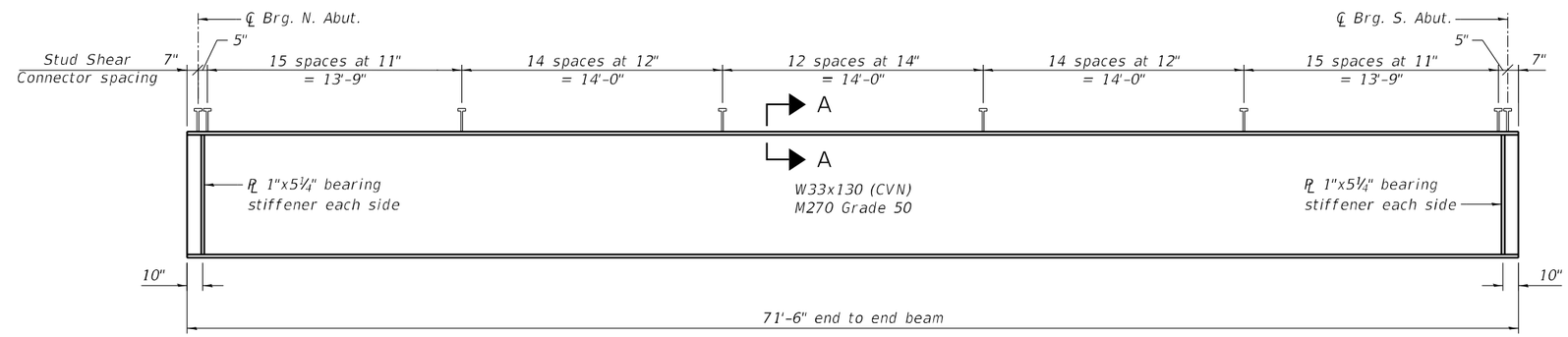

BEAM ELEVATION

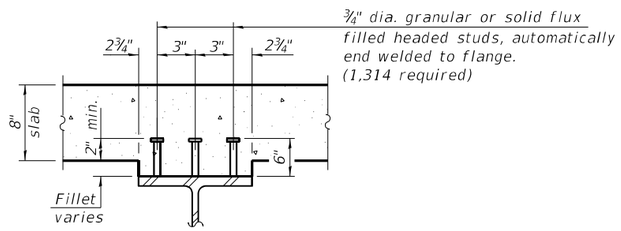

SECTION A-A

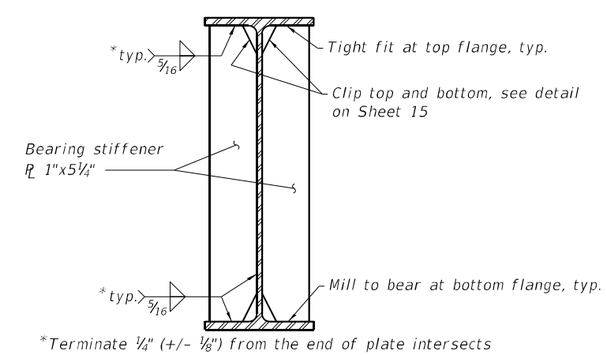

*Terminate ¼" (+/- ⅛") from the end of plate intersects

SECTION AT ABUTMENT

(No. stiffeners required = 24)

ESCA CONSULTANTS, INC. ENGINEERS & ARCHITECTS	USER NAME = nhc	DESIGNED - ELH 01/24	REVISED -	STATE OF ILLINOIS DEPARTMENT OF TRANSPORTATION	STEEL FRAMING PLAN AND DETAILS STRUCTURE NO. 097-0083
	ESCA PROJECT NO. 1359.13	CHECKED - CTJ 01/24	REVISED -		
	PLOT SCALE = 0:2 ':" / in.	DRAWN - NHC 04/24	REVISED -		
	PLOT DATE = 6/3/2024	CHECKED - ELH 04/24	REVISED -		SHEET 14 OF 24 SHEETS

F.A.P. RTE.	SECTION	COUNTY	TOTAL SHEETS	SHEET NO.
328	105B-3	WHITE	71	48
		CONTRACT NO. 78833		
		ILLINOIS FED. AID PROJECT		

MODEL: PLOT
FILE NAME: Y:\IDOT\1359-13_78833\CADD\SP SN 097-0083\0970083-78833-14-SteelFramingPlan.dgn
6/3/2024 10:11:42 AM

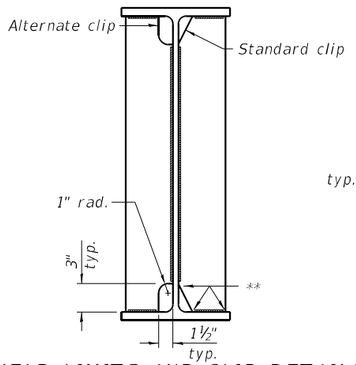

WELD LIMITS AND CLIP DETAILS

** Stop welds ¼" (±⅛") from edges as shown, typ.

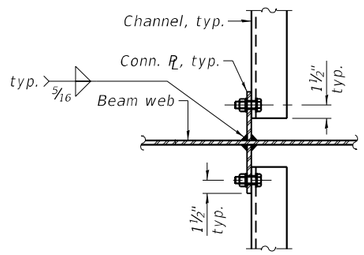

DETAIL A

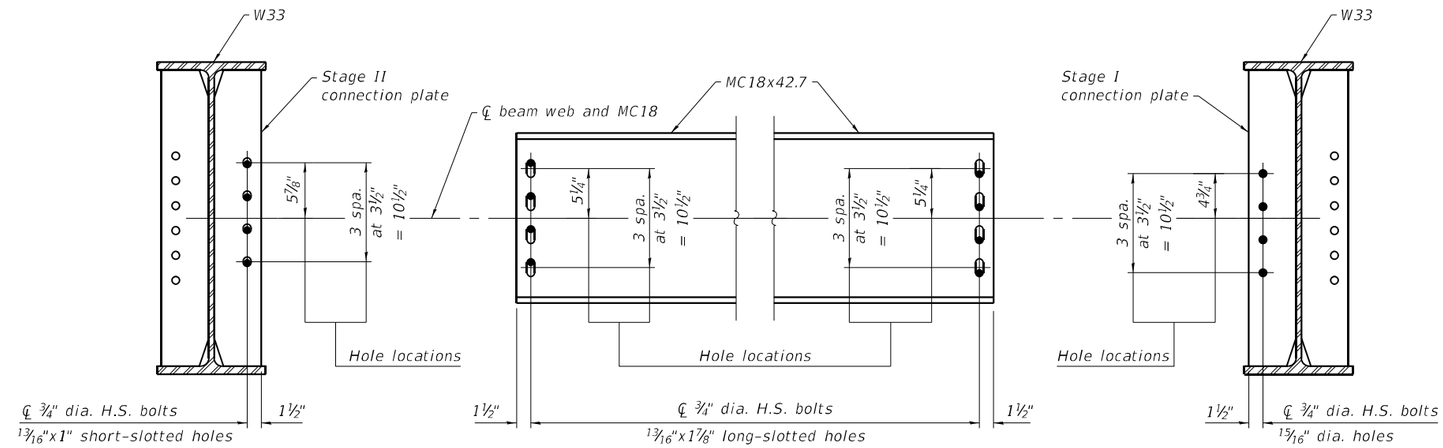

Stage II Side

DETAIL B

Position bolts in slots as shown prior to pouring stage II concrete

Stage I Side

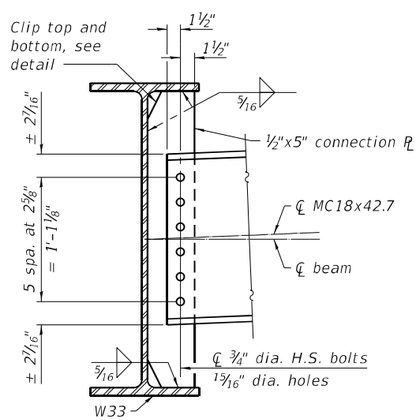

INTERIOR DIAPHRAGM D1

(16 Required)

Diaphragm D1 Notes:
Two hardened washers required for each set of oversized holes.
Alternate channels of equal depth and larger weight are permitted to facilitate material acquisition. Alternate channels, if utilized, shall be provided at no additional cost to the Department.

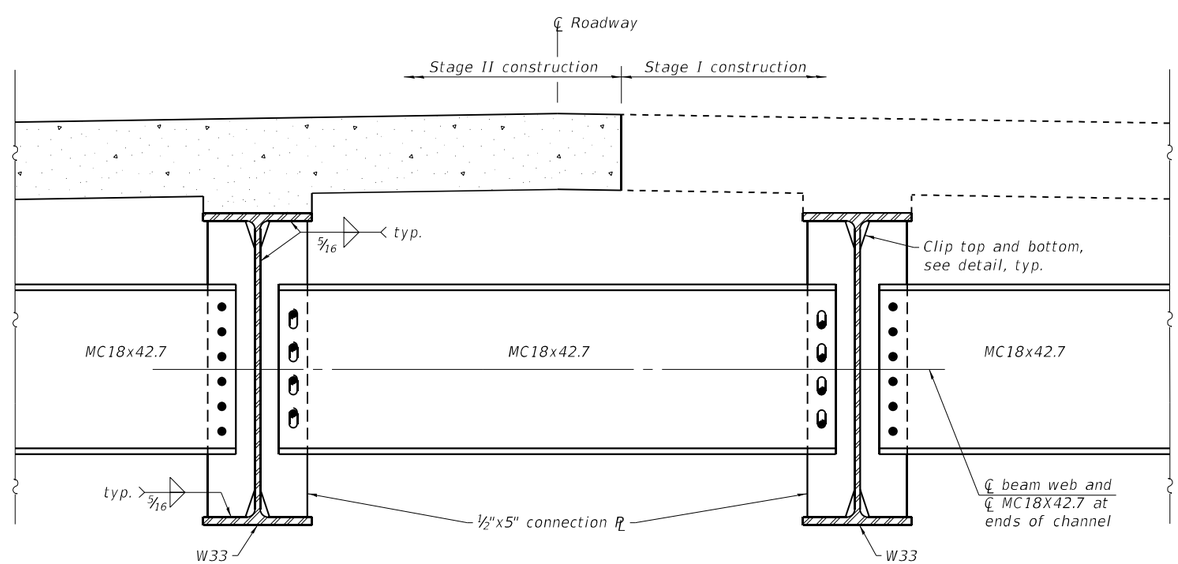

INTERIOR DIAPHRAGM D2

(4 Required)

Diaphragm D2 Notes:
Two hardened washers required for each set of holes.
Alternate channels of equal depth and larger weight are permitted to facilitate material acquisition. Alternate channels, if utilized, shall be provided at no additional cost to the Department.
Bolts in slots shall be finger tight until the second stage pour is complete. Fully tighten after Stage II deck pour is complete.
See Detail B for additional steel details.

MODEL: PLOT
FILE NAME: Y:\IDOT\1359-13_78833\CADD\SP SN 097-0083\0970083-78833-15-FramingDtls.dgn

ESCA CONSULTANTS, INC. CIVIL & STRUCTURAL ENGINEERS

USER NAME = nhc	DESIGNED - ELH	02/24	REVISED -	STATE OF ILLINOIS DEPARTMENT OF TRANSPORTATION	FRAMING DETAILS STRUCTURE NO. 097–0083
ESCA PROJECT NO. 1359.13	CHECKED - CTJ	02/24	REVISED -		
PLOT SCALE = 0:2 ':" / in.	DRAWN - NHC	02/24	REVISED -		
PLOT DATE = 2/2/2024	CHECKED - ELH	02/24	REVISED -		SHEET 15 OF 24 SHEETS

F.A.P. RTE.	SECTION	COUNTY	TOTAL SHEETS	SHEET NO.
328	105B-3	WHITE	71	49
		CONTRACT NO. 78833		
		ILLINOIS	FED. AID PROJECT	

2/2/2024 10:38:03 AM

INTERIOR BEAM MOMENT TABLE		
		0.5 Span
I_s	(in^4)	6,710
$I_c(n)$	(in^4)	18,034
$I_c(3n)$	(in^4)	13,450
$I_c(cr)$	(in^4)	–
S_s	(in^3)	406
$S_c(n)$	(in^3)	593
$S_c(3n)$	(in^3)	539
$S_c(cr)$	(in^3)	–
S_x	(in^3)	518
DC1	(k/')	0.775
M_{DC1}	('k)	479.1
DC2	(k/')	0.175
M_{DC2}	('k)	108.2
DW	(k/')	0.267
M_{DW}	('k)	165.0
LLDF		0.5482
M_{LL+IM}	('k)	946.8
f_l (Strength I)	(ksi)	0
$M_u + {}^1/_3 f_l S_x$	('k)	2,638
$\varnothing_f M_n$	('k)	3,151
f_s DC1	(ksi)	14.16
f_s DC2	(ksi)	2.41
f_s DW	(ksi)	3.67
f_s (LL+IM)	(ksi)	19.15
f_l (Service II)	(ksi)	0
$f_s + {}^{f_l}/_2$ (Service II)	(ksi)	45.14
Service II Resistance	(ksi)	47.50
$f_s + {}^{f_l}/_3$ (Strength I)	(ksi)	–
$\varnothing_f F_n$	(ksi)	–
V_f	(k)	25.1

BEAM REACTION TABLE			
		Abutments	
		Interior	Exterior
LLDF		0.6706	0.5000
OCF		1.0000	1.0000
R_{DC1}	(k)	27.3	27.5
R_{DC2}	(k)	6.2	6.2
R_{DW}	(k)	9.4	9.4
R_{LL}	(k)	57.5	42.9
R_{Im}	(k)	14.0	10.5
R_{Total} (Strength I)(Impact)	(k)	181.2	149.6
R_{Total} (Strength I)(No Impact)	(k)	156.7	131.3

I_s, S_s : Non-composite moment of inertia and section modulus of the steel section used for computing f_s(Total-Strength I, and Service II) due to non-composite dead loads ($in.^4$ and $in.^3$).

$I_c(n)$, $S_c(n)$: Composite moment of inertia and section modulus of the steel and deck based upon the modular ratio, "n", used for computing f_s(Total-Strength I, and Service II) in uncracked sections due to short-term composite live loads ($in.^4$ and $in.^3$).

$I_c(3n)$, $S_c(3n)$: Composite moment of inertia and section modulus of the steel and deck based upon 3 times the modular ratio, "3n", used for computing f_s(Total-Strength I, and Service II) in uncracked sections, due to long-term composite (superimposed) dead loads ($in.^4$ and $in.^3$).

$I_c(cr)$, $S_c(cr)$: Composite moment of inertia and section modulus of the steel and longitudinal deck reinforcement, used for computing f_s (Total-Strength I and Service II) in cracked sections, due to both short-term composite live loads and long-term composite (superimposed) dead loads ($in.^4$ and $in.^3$).

S_x : Section modulus about the major axis of a section to the controlling flange, tension or compression, taken as yield moment with respect to the controlling flange over the yield strength of the controlling flange ($in.^3$).

DC1: Un-factored non-composite dead load (kips/ft.).

M_{DC1} : Un-factored moment due to non-composite dead load (kip-ft.).

DC2: Un-factored long-term composite (superimposed excluding future wearing surface) dead load (kips/ft.).

M_{DC2} : Un-factored moment due to long-term composite (superimposed excluding future wearing surface) dead load (kip-ft.).

DW: Un-factored long-term composite (superimposed future wearing surface only) dead load (kips/ft.).

M_{DW} : Un-factored moment due to long-term composite (superimposed future wearing surface only) dead load (kip-ft.).

LLDF: Live Load Distribution Factor for moment and shear computed according to Article 4.6.2.2 and further IDOT provisions.

M_{LL+IM}: Un-factored live load moment plus dynamic load allowance (impact) (kip-ft.).

M_u : Strength I load combination of factored design moments (kip-ft.).
$1.25\ (M_{DC1} + M_{DC2}) + 1.5\ M_{DW} + 1.75\ M_{LL+IM}$

f_l : Factored calculated flange lateral bending stress as calculated using Article 6.10.1.6 and as further simplified by IDOT provisions (ksi).

$\phi_f M_n$: Factored nominal flexural resistance of the section determined as specified in Article 6.10.7.1 or A6 as applicable (kip-ft.).

f_s DC1: Un-factored stress at edge of flange for controlling steel flange due to vertical non-composite dead loads as calculated below (ksi).
M_{DC1} / S_s

f_s DC2: Un-factored stress at edge of flange for controlling steel flange due to vertical composite dead loads as calculated below (ksi).
$M_{DC2} / S_c(3n)$ or $M_{DC2} / S_c(cr)$ as applicable.

f_s DW: Un-factored stress at edge of flange for controlling steel flange due to vertical composite future wearing surface loads as calculated below (ksi).
$M_{DW} / S_c(3n)$ or $M_{DW} / S_c(cr)$ as applicable.

f_s (LL + IM): Un-factored stress at edge of flange for controlling steel flange due to vertical composite live load plus impact loads as calculated below (ksi).
$M_{LL+IM} / S_c(n)$ or $M_{LL+IM} / S_c(cr)$ as applicable.

$f_s + f_l/2$ (Service II): Sum of stresses as computed below (ksi).
f_s DC1 + f_s DC2 + f_s DW + 1.3 f_s (LL + IM) + $f_l/2$

Service II Resistance: Composite ($0.95R_hF_{yf}$) or noncomposite ($0.80R_hF_{yf}$) stress capacity according to Article 6.10.4.2 (ksi).

$f_s + f_l/3$ (Strength I): Sum of stresses as computed below on non-compact sections (ksi).
$1.25\ (f_s\ DC1 + f_s\ DC2) + 1.5\ f_s\ DW + 1.75\ f_s\ (LL + IM) + f_l/3$

$\phi_f F_n$: Factored nominal flexural resistance of the section as specified in Article 6.10.7.2 or 6.10.8 as applicable (ksi).

V_f : Maximum factored shear range in span computed according to Article 6.10.10.

OCF: Obtuse Correction Factor according to Article 4.6.2.2.3c or as further simplified by IDOT provisions.

R_{DC1} : Un-factored reaction due to non-composite dead load (kip).

R_{DC2} : Un-factored reaction due to long-term composite (superimposed excluding future wearing surface) dead load (kip).

R_{DW} : Un-factored reaction due to long-term composite (superimposed future wearing surface only) dead load (kip).

R_{LL} : Un-factored live load reaction (kip).

R_{IM} : Un-factored dynamic load allowance (impact) (kip).

R_{Total} (Strength I)(Impact): Strength I load combination of factored design reactions (kip).
$1.25\ (R_{DC1} + R_{DC2}) + 1.5R_{DW} + 1.75\ (R_{LL} + R_{IM})$

R_{Total} (Strength I)(No Impact): Strength I load combination of factored design reactions, not including dynamic load allowance (Impact) (kip).
$1.25\ (R_{DC1} + R_{DC2}) + 1.5R_{DW} + 1.75\ (R_{LL})$

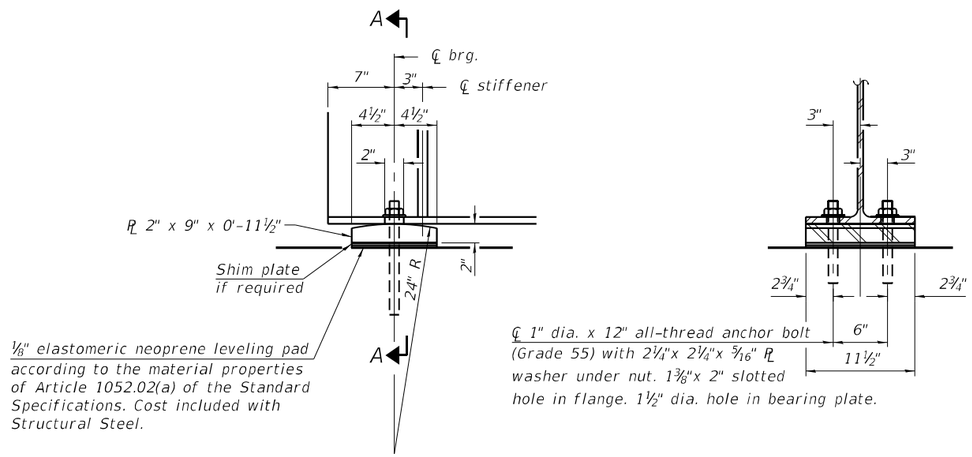

ELEVATION AT ABUTMENT

SECTION A-A

FIXED BEARING

Notes:

Anchor bolts at all supports shall be installed as each member is erected unless an equivalent temporary means of lateral restraint is used.

All (embedded and separate) bearing plates, side retainers, anchor bolts, nuts, washers and pintles shall be galvanized according to AASHTO M111 or M232 as applicable.

Two ⅛ in. adjusting shims shall be provided for each bearing in addition to all other plates or shims and placed as shown on the bearing details.

BILL OF MATERIAL

Item	Unit	Total
Anchor Bolts, 1"	Each	24

MODEL: PLOT
FILE NAME: Y:\IDOT\1359-13_78833\CADD\SP SN 097-0083\09700083-78833-17-BearingDtls.dgn

ESCA CONSULTANTS, INC. CIVIL • STRUCTURAL • ENVIRONMENTAL

USER NAME = ztc	DESIGNED - ELH 12/23	REVISED -	
ESCA PROJECT NO. 1359.13	CHECKED - CTJ 12/23	REVISED -	
PLOT SCALE = 0:2 ':" / in.	DRAWN - NHC 04/24	REVISED -	
PLOT DATE = 4/15/2024	CHECKED - ELH 04/24	REVISED -	

STATE OF ILLINOIS
DEPARTMENT OF TRANSPORTATION

BEARING DETAILS
STRUCTURE NO. 097-0083

SHEET 17 OF 24 SHEETS

F.A.P. RTE.	SECTION	COUNTY	TOTAL SHEETS	SHEET NO.
328	105B-3	WHITE	71	51
		CONTRACT NO. 78833		
	ILLINOIS	FED. AID PROJECT		

4/15/2024 10:59:13 AM

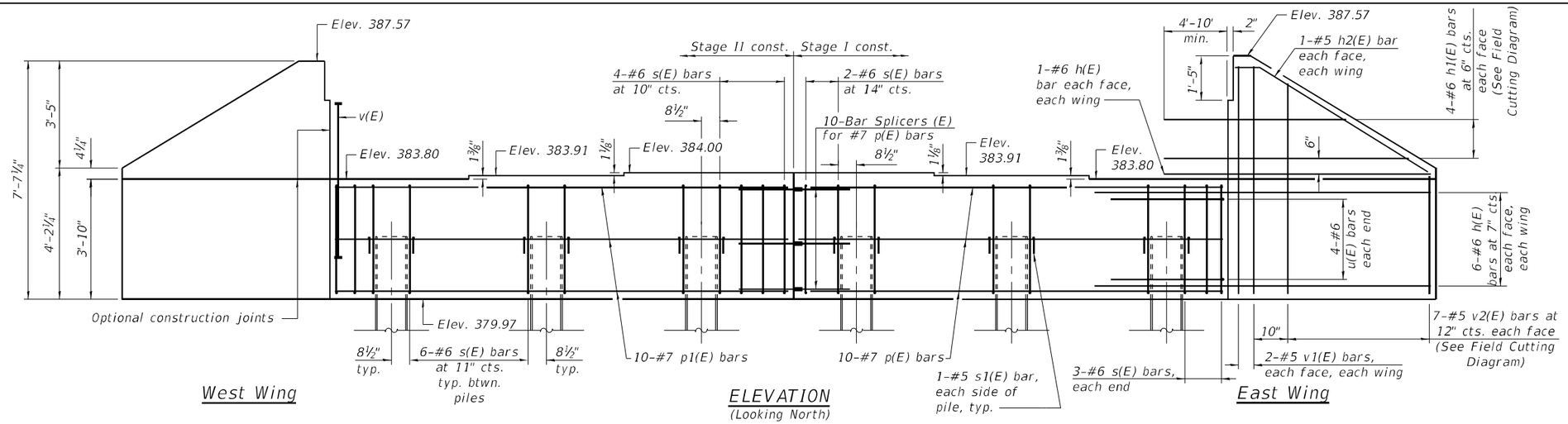

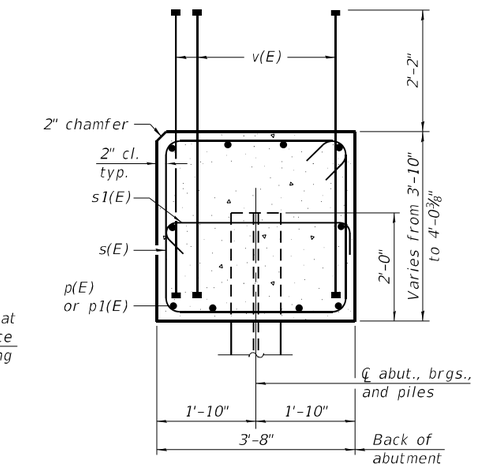

SEC. THRU ABUT.

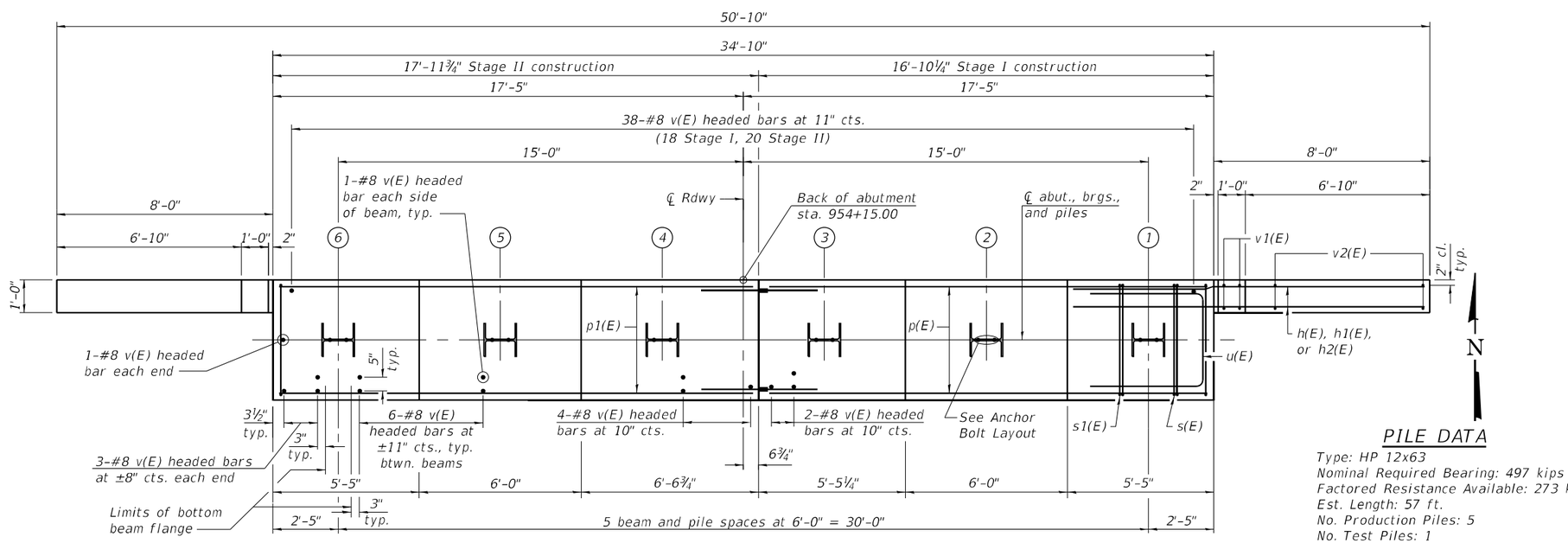

PLAN

BILL OF MATERIAL

Bar	No.	Size	Length	Shape
h(E)	24	#6	13'-0"	
h1(E)	8	#6	20'-4"	
h2(E)	4	#5	8'-6"	
p(E)	10	#7	16'-7"	
p1(E)	10	#7	17'-8"	
s(E)	36	#6	15'-0"	
s1(E)	12	#5	4'-4"	
u(E)	8	#6	11'-10"	
v(E)	88	#8	5'-3"	
v1(E)	8	#5	7'-2"	
v2(E)	14	#5	10'-10"	
Structure Excavation			Cu. Yd.	125
Concrete Structures			Cu. Yd.	22.3
Reinforcement Bars, Epoxy Coated			Pound	3,910
Furnishing Steel Piles HP12x63			Foot	285
Driving Piles			Foot	285
Test Pile Steel HP12x63			Each	1
Bar Terminator			Each	176
Pile Shoes			Each	6

PILE DATA

Type: HP 12x63
Nominal Required Bearing: 497 kips
Factored Resistance Available: 273 kips
Est. Length: 57 ft.
No. Production Piles: 5
No. Test Piles: 1

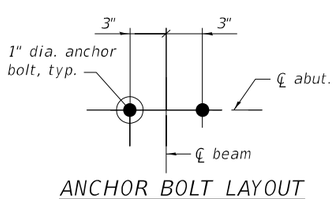

ANCHOR BOLT LAYOUT

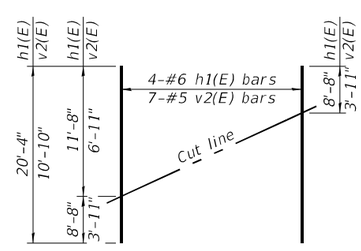

FIELD CUTTING DIAGRAM

Order h1(E) and v2(E) full length. Cut as shown and use remainder of bars in opposite wing.

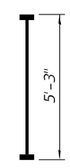

BAR v(E)
(Headed. 2-#8 Bar Terminators)

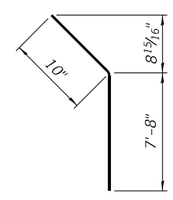

BAR h2(E)

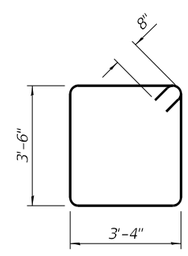

BAR s(E)

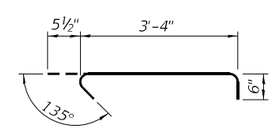

BAR s1(E)

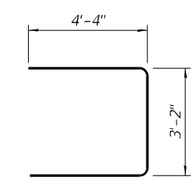

BAR u(E)

Notes:
Pour steps monolithically with cap.
Headed bars shall conform to ASTM A970 with threaded attachment; Class HA; and reinforcement bars conforming to ASTM A706.
For details of piles see Sheet 20 of 24.

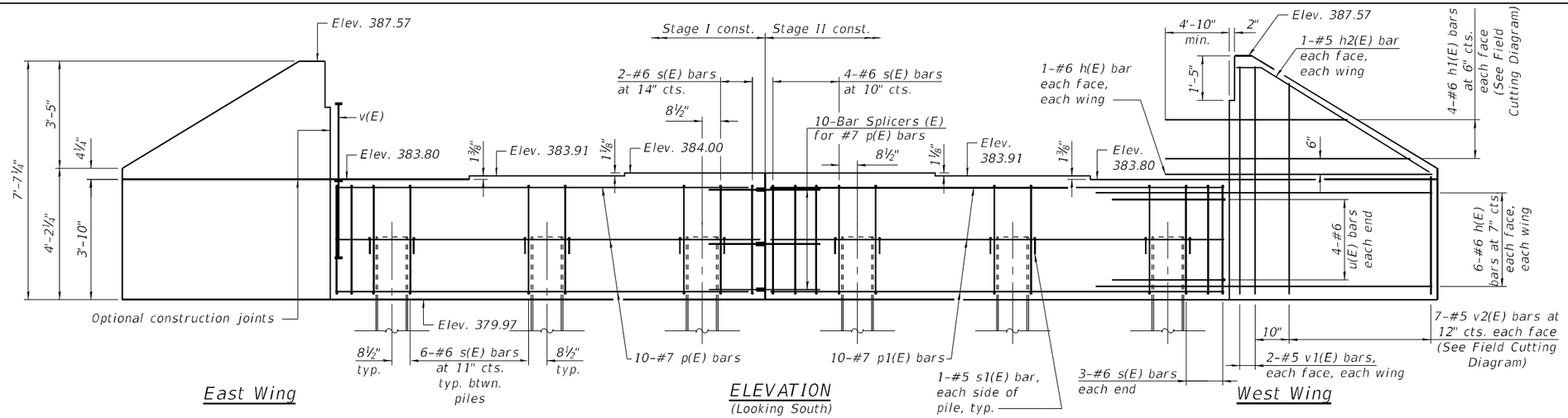

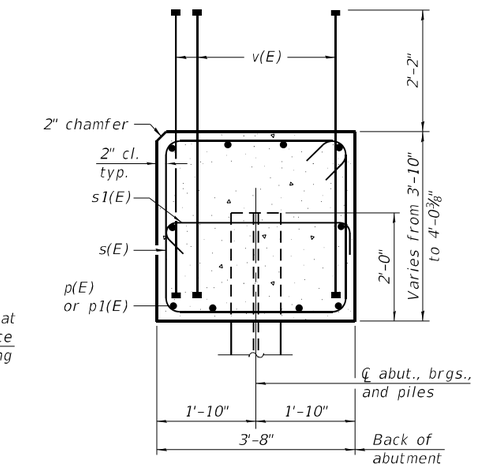

SEC. THRU ABUT.

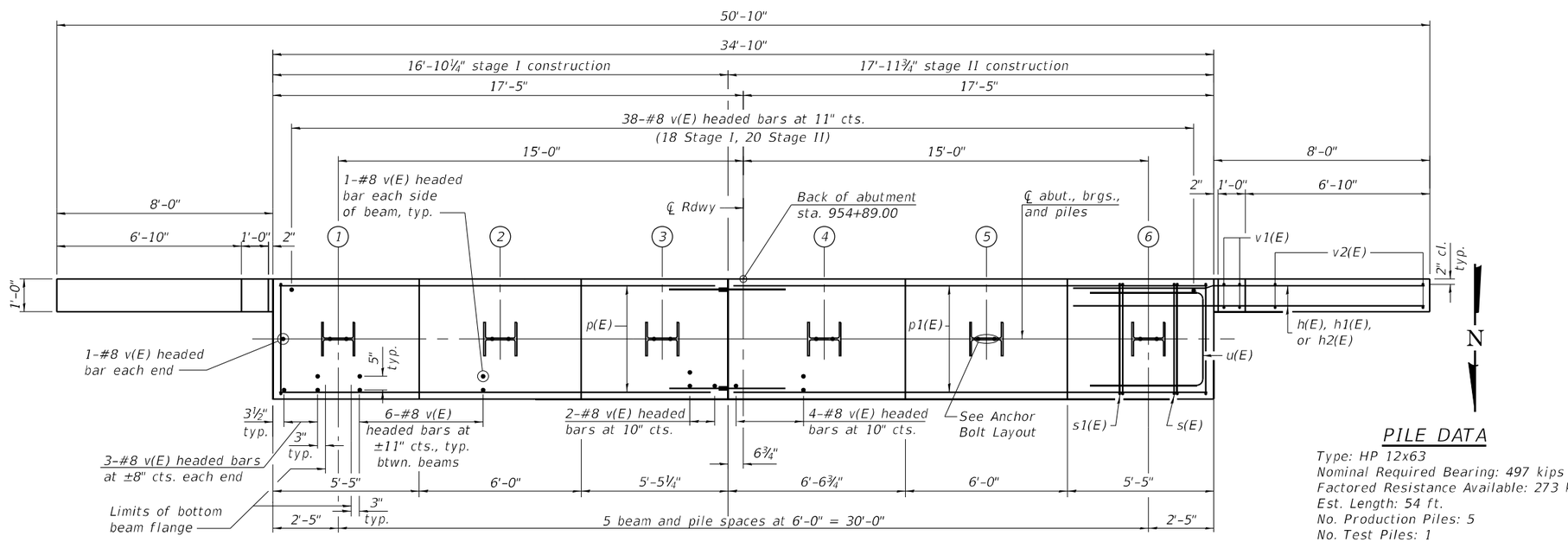

PLAN

BILL OF MATERIAL

Bar	No.	Size	Length	Shape
h(E)	24	#6	13'-0"	
h1(E)	8	#6	20'-4"	
h2(E)	4	#5	8'-6"	
p(E)	10	#7	16'-7"	
p1(E)	10	#7	17'-8"	
s(E)	36	#6	15'-0"	
s1(E)	12	#5	4'-4"	
u(E)	8	#6	11'-10"	
v(E)	88	#8	5'-3"	
v1(E)	8	#5	7'-2"	
v2(E)	14	#5	10'-10"	
Structure Excavation		Cu. Yd.	125	
Concrete Structures		Cu. Yd.	22.3	
Reinforcement Bars, Epoxy Coated		Pound	3,910	
Furnishing Steel Piles HP12x63		Foot	270	
Driving Piles		Foot	270	
Test Pile Steel HP12x63		Each	1	
Bar Terminator		Each	176	
Pile Shoes		Each	6	

PILE DATA

Type: HP 12x63
Nominal Required Bearing: 497 kips
Factored Resistance Available: 273 kips
Est. Length: 54 ft.
No. Production Piles: 5
No. Test Piles: 1

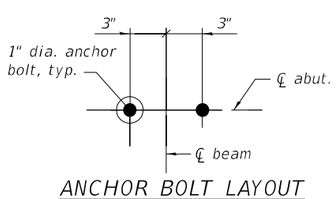

ANCHOR BOLT LAYOUT

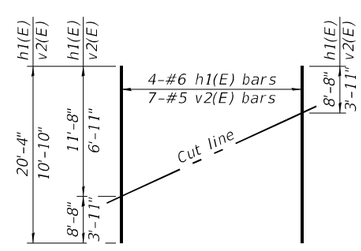

FIELD CUTTING DIAGRAM

Order h1(E) and v2(E) full length. Cut as shown and use remainder of bars in opposite wing.

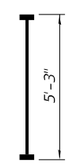

BAR v(E)
(Headed. 2-#8 Bar Terminators)

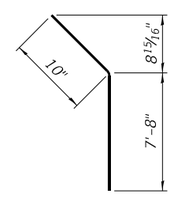

BAR h2(E)

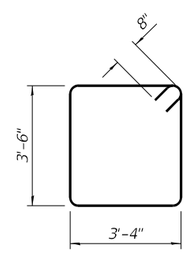

BAR s(E)

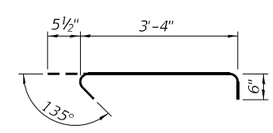

BAR s1(E)

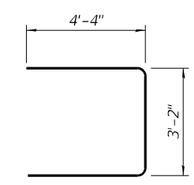

BAR u(E)

Notes:
Pour steps monolithically with cap.
Headed bars shall conform to ASTM A970 with threaded attachment; Class HA; and reinforcement bars conforming to ASTM A706.
For details of piles see Sheet 20 of 24.

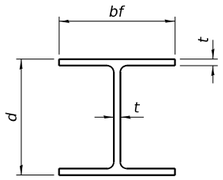

STEEL PILE TABLE

Designation	Depth d	Flange width bf	Web and Flange thickness t	Encasement diameter A
HP 18x181	18	18	1	36"
x157	17¾"	17⅞"	⅞"	36"
x135	17½"	17¾"	¾"	36"
HP 16x183	16½"	16½"	1⅛"	36"
x162	16¼"	16⅛"	1"	36"
x141	16	16	⅞"	36"
x121	15¾"	15⅞"	¾"	36"
HP 14x117	14¼"	14⅞"	13/16"	30"
x102	14"	14¾"	11/16"	30"
x89	13⅞"	14¾"	⅝"	30"
x73	13⅝"	14⅝"	½"	30"
HP 12x84	12¼"	12¼"	11/16"	24"
x74	12⅛"	12¼"	⅝"	24"
x63	12"	12⅛"	½"	24"
x53	11¾"	12"	7/16"	24"
HP 10x57	10"	10¼"	9/16"	24"
x42	9¾"	10⅛"	7/16"	24"
HP 8x36	8"	8⅛"	7/16"	18"

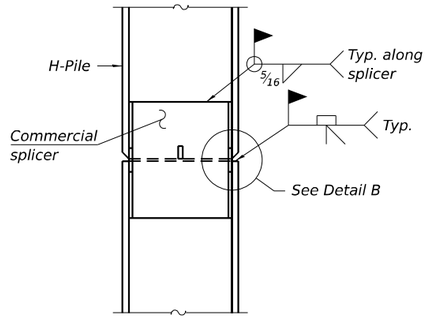

ELEVATION

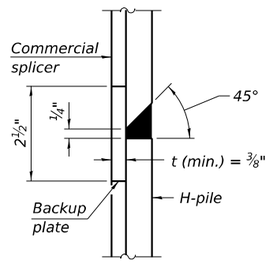

DETAIL B

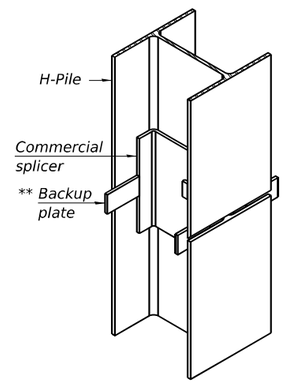

ISOMETRIC VIEW

WELDED COMMERCIAL SPLICE

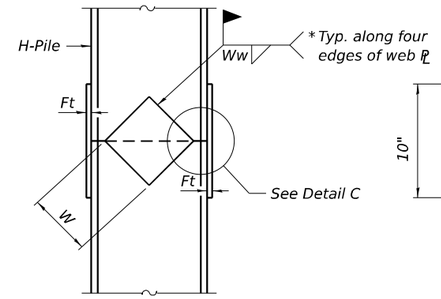

ELEVATION

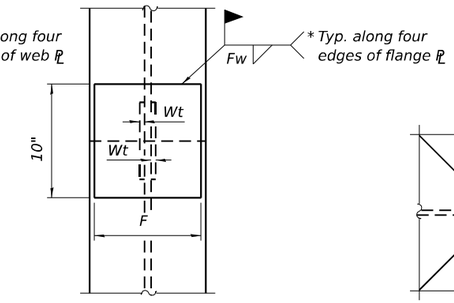

END VIEW

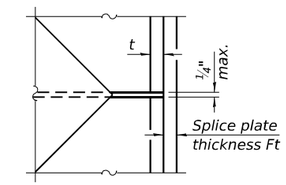

DETAIL C

Designation	F	Ft	Fw	W	Wt	Ww
HP 18x181	15½"	1½"	1"	9½"	⅞"	¾"
x157	15¼"	1¼"	1"	9½"	⅞"	¾"
x135	15¼"	1¼"	1"	9½"	⅞"	¾"
HP 16x183	13¾"	1½"	1"	8¼"	⅞"	¾"
x162	13½"	1½"	1"	8¼"	¾"	⅝"
x141	13½"	1¼"	⅞"	8¼"	¾"	⅝"
x121	13½"	1¼"	⅞"	8¼"	¾"	⅝"
HP 14x117	12½"	1¼"	⅞"	7¾"	⅝"	½"
x102	12½"	1"	¾"	7¾"	⅝"	½"
x89	12½"	⅞"	11/16"	7¾"	⅝"	½"
x73	12½"	¾"	9/16"	7¾"	⅝"	½"
HP 12x84	10"	1"	11/16"	6½"	⅝"	½"
x74	10"	⅞"	11/16"	6½"	⅝"	½"
x63	10"	¾"	½"	6½"	½"	⅜"
x53	10"	¾"	½"	6½"	½"	⅜"
HP 10x57	8"	⅞"	9/16"	5¼"	½"	⅜"
x42	8"	¾"	9/16"	5¼"	½"	⅜"
HP 8x36	6¾"	⅝"	7/16"	4"	½"	⅜"

WELDED PLATE FIELD SPLICE

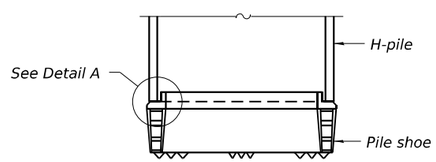

ELEVATION

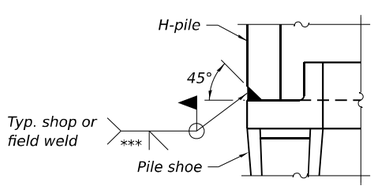

DETAIL A

SHOE ATTACHMENT

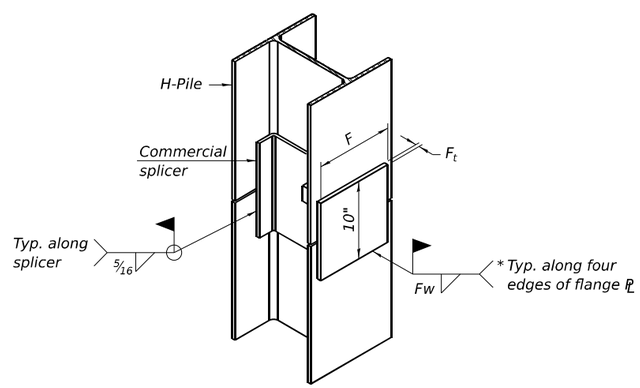

ISOMETRIC VIEW

WELDED COMMERCIAL SPLICE ALTERNATE

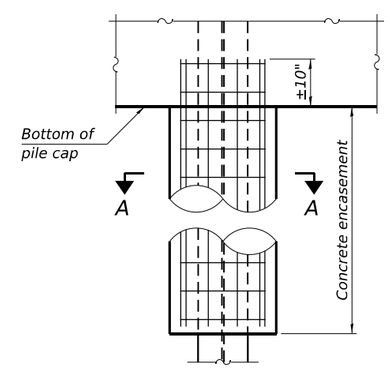

ELEVATION

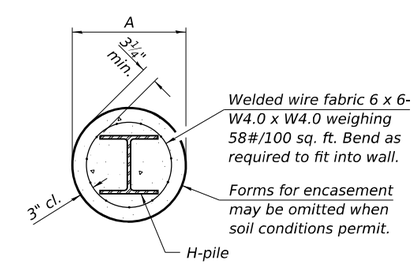

SECTION A-A

INDIVIDUAL PILE CONCRETE ENCASEMENT
(when specified)

Note:
The steel H-piles shall be according to AASHTO M270 Grade 50.

* Interrupt welds ¼" from end of web and/or each flange.

** Remove portions of backup plates that extend outside the flanges.

*** Weld size per pile shoe manufacturer (5/16" min.).

F-HP 10-27-2023

MODEL: PLOT
FILE NAME: Y:\IDOT\1359-13_78833\CADD\SP SN 097-0083\0970083-78833-20-HPPileDtls.dgn

ESCA CONSULTANTS, INC.

USER NAME = nhc	DESIGNED - ELH 01/24	REVISED -	
ESCA PROJECT NO. 1359.13	CHECKED - CTJ 01/24	REVISED -	
PLOT SCALE = 0.1667 ' / in.	DRAWN - NHC 01/24	REVISED -	
PLOT DATE = 2/2/2024	CHECKED - ELH 01/24	REVISED -	

STATE OF ILLINOIS
DEPARTMENT OF TRANSPORTATION

HP PILE DETAILS
STRUCTURE NO. 097–0083

SHEET 20 OF 24 SHEETS

F.A.P. RTE.	SECTION	COUNTY	TOTAL SHEETS	SHEET NO.
328	105B-3	WHITE	71	54

CONTRACT NO. 78833
ILLINOIS FED. AID PROJECT

2/2/2024 10:42:04 AM

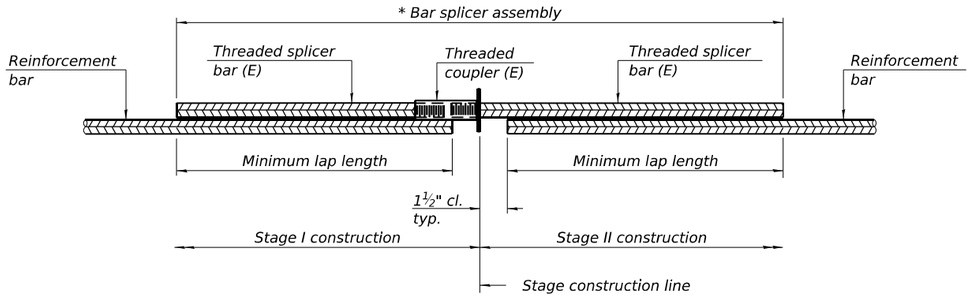

STANDARD BAR SPLICER ASSEMBLY PLAN

Only bar splicer assemblies as presented on the approved QPL list may be used.

Threaded splicer bar length = min. lap length + 1½" + thread length

* Epoxy not required on Bar Splicer Assembly components used in conjunction with black bars.

Location	Bar size	No. assemblies required	Minimum lap length
Top of Slab	#5	129	3'-6"
Bottom of Slab	#5	79	3'-6"
Diaphragms	#6	14	4'-0"
Top of Approach	#5	92	3'-4"
Bottom of Approach	#8	120	4'-9"
Top of Approach Footing	#5	40	3'-2"
Bottom of Approach Footing	#5	40	3'-2"
North Abutment	#7	10	5'-0"
South Abutment	#7	10	5'-0"

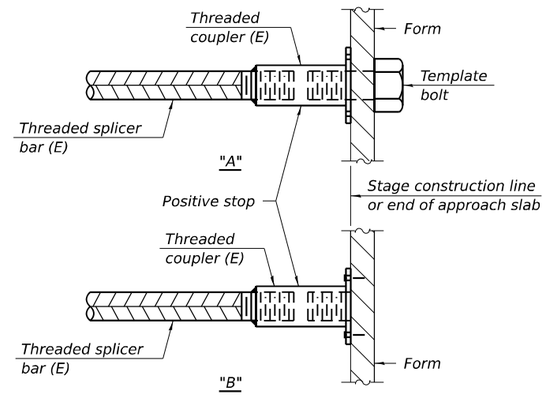

INSTALLATION AND SETTING METHODS

"A" : Set bar splicer assembly by means of a template bolt.
"B" : Set bar splicer assembly by nailing to wood forms or cementing to steel forms.
(E) : Indicates epoxy coating.

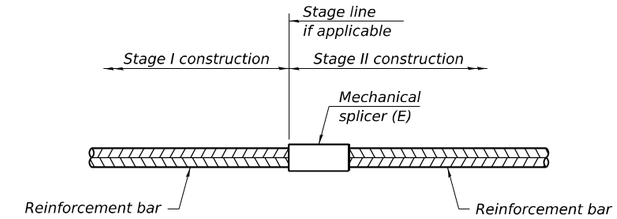

STANDARD MECHANICAL SPLICER

Location	Bar size	No. assemblies required
NA		

Notes:
Splicer bars shall be deformed with threaded ends and have a minimum 60 ksi yield strength.
All reinforcement shall be lapped and tied to the splicer bars.
Bar splicer assemblies shall be epoxy coated according to the requirements for reinforcement bars. See Section 508 of the Standard Specifications.
See approved list of bar splicer assemblies and mechanical splicers for alternatives.

BSD-1 5-15-2023

Illinois Department of Transportation
Division of Highways
District 9

SOIL BORING LOG

Date 3/30/21

ROUTE US 45 **DESCRIPTION** Bridge over Lost Creek **LOGGED BY** L. Estel

SECTION 105,B 105 BY-2 (existing) **LOCATION** 1.5 mile N of Enfield (near N. Abut.), **SEC.** 32, **TWP.** 4S, **RNG.** 8E, **PM**

COUNTY White **DRILLING METHOD** Hollow Stem Auger (8" O.D., 3.25" I.D.) **HAMMER TYPE** Auto SPT 140 lbs

STRUCT. NO. 097-0023
Station 954+52

BORING NO. 1-S
Station 953+93
Offset 12.0ft Lt
Ground Surface Elev. 387.7 ft

Surface Water Elev. 374.5 ft
Stream Bed Elev. 373.9 ft

Groundwater Elev.:
First Encounter 355.2 ft
Upon Completion ft
After Hrs. ft

Description	Elev.	DEPTH (ft)	BLOWS	UCS Qu (tsf)	MOIST (%)
Cored Pavement					
	386.20				
Stiff Brown with specks of dark Brown, Moist SILTY CLAY			1		
			2	1.2	20
			3	B	
	383.20				
Soft Brown with specks of dark Brown, Moist SILTY CLAY		-5	1		
			1	0.4	24
			2	B	
(Tan with specks of Brown)			1		
			2	0.3	24
			3	B	
	378.20				
M. Stiff Tan-brown, Moist SILTY CLAY		-10	1		
			1	1.0	26
			3	B	
	375.70				
Stiff Tan-brown and mottled Red-brown, Moist SILTY CLAY			1		
			2	1.4	23
			4	B	
	373.20				
V. Stiff Tan-brown and mottled Brown, Moist CLAY		-15	1		
			4	3.5	25
			5	B	
	370.70				
Stiff Tan-brown and mottled Brown, Moist CLAY			1		
			3	1.4	22
			4	B	
	368.20				
M. Stiff Grey Brown, Moist CLAY		-20	1		
M. Stiff Grey Brown, Moist CLAY *(continued)*			2	1.0	24
			3	B	
	363.20				
M. Stiff Dark Grey, Moist CLAY		-25	WOH		
			1	0.5	25
			1	B	
			WOH		
			1	0.5	22
			1	B	
	358.20				
Loose Grey, V. Moist to Wet SANDY LOAM 5% m. SAND, 62% f. SAND, 24% SILT, 9% CLAY, non-plastic (Lab 007)		-30	1		
			3		17
			5		
	355.70				
Loose Grey, V. Moist to Wet m. & f. SAND 6% c. SAND to f. GRAVEL, 37% m. SAND, 46% f. SAND, 8% SILT, 3% CLAY, non-plastic (Lab 008)			WOH		
			WOH		17
			4		
	353.20				
Hard dark Grey, Moist CLAY with specks of rock fragments on pebbles		-35	7		
			12	5.1	16
			15	B	
(V. Stiff)			2		
			6	3.9	18
			9	B	
(Hard)		-40	2		

The Unconfined Compressive Strength (UCS) Failure Mode is indicated by (B-Bulge, S-Shear, P-Penetrometer, E-Estimated)
Abbreviations W.O.H - Sampler Advanced By Weight of Hammer, W.O.P - Advanced by Weight of Pipe, B.S. - Before Seating
The SPT (N value) is the sum of the last two blow values in each sampling zone (AASHTO T206) BBS, from 137 (Rev. 8-99)

File Name S:\MATERIALS\GEOTECHNICAL UNIT\GINT\PROJECTS\PROJECTS FILE\WHITE\STRUCTURES\097-0023 US 45 OVER LOST CREEK\097-0023 IL 45 OVER LOST CREEK.GPJ Data Templete D6TEMPLT.GDT Date Printed 6/9/21
Latitude 38 07 36 Longitude -88 20 11.54 Datum NAD83 Job Number

Illinois Department of Transportation
Division of Highways
District 9

SOIL BORING LOG

Date 3/30/21

ROUTE US 45 **DESCRIPTION** Bridge over Lost Creek **LOGGED BY** L. Estel

SECTION 105,B 105 BY-2 (existing) **LOCATION** 1.5 mile N of Enfield (near N. Abut.), **SEC.** 32, **TWP.** 4S, **RNG.** 8E, **PM**

COUNTY White **DRILLING METHOD** Hollow Stem Auger (8" O.D., 3.25" I.D.) **HAMMER TYPE** Auto SPT 140 lbs

STRUCT. NO. 097-0023
Station 954+52

BORING NO. 1-S
Station 953+93
Offset 12.0ft Lt
Ground Surface Elev. 387.7 ft

Surface Water Elev. 374.5 ft
Stream Bed Elev. 373.9 ft

Groundwater Elev.:
First Encounter 355.2 ft
Upon Completion ft
After Hrs. ft

Description	Elev.	DEPTH (ft)	BLOWS	UCS Qu (tsf)	MOIST (%)
(Hard) *(continued)*			7	4.5	17
			10	B	
	343.20				
V. Stiff dark Grey, Moist CLAY		-45	2		
			7	2.9	19
			10	B	
	338.20				
Stiff Green-grey, Moist SILTY CLAY		-50	1		
			4	1.9	17
			7	B	
	333.20				
Stiff Green-grey, Moist SILTY CLAY with a SANDSTONE seam		-55	1		
			6	1.7	25
			9	B	
	328.20				
Hard Grey, Dry CLAY SHALE		-60	100/4"		

Description	DEPTH (ft)	BLOWS	UCS Qu (tsf)	MOIST (%)
			9.2	12
			S	
	-65			
Bottom of hole @ 59.9 ft				
Ground surface elevation referenced to Benchmark WP097-00232, IP&C on W. side of US 45 @ Sta 955+00; Elev. 385.68				
Hammer Efficiency: 86.5% To convert "N" values to "N60", multiply by 1.44				
	-70			
	-75			
	-80			

The Unconfined Compressive Strength (UCS) Failure Mode is indicated by (B-Bulge, S-Shear, P-Penetrometer, E-Estimated)
Abbreviations W.O.H - Sampler Advanced By Weight of Hammer, W.O.P - Advanced by Weight of Pipe, B.S. - Before Seating
The SPT (N value) is the sum of the last two blow values in each sampling zone (AASHTO T206) BBS, from 137 (Rev. 8-99)

File Name S:\MATERIALS\GEOTECHNICAL UNIT\GINT\PROJECTS\PROJECTS FILE\WHITE\STRUCTURES\097-0023 US 45 OVER LOST CREEK\097-0023 IL 45 OVER LOST CREEK.GPJ Data Templete D6TEMPLT.GDT Date Printed 6/9/21
Latitude 38 07 36 Longitude -88 20 11.54 Datum NAD83 Job Number

Illinois Department of Transportation
Division of Highways
District 9

SOIL BORING LOG

Date 4/2/21

ROUTE US 45 DESCRIPTION Bridge over Lost Creek LOGGED BY L. Estel

SECTION 105,B 105 BY-2 (existing) LOCATION 1.5 mile N of Enfield (near S. Abut.), SEC. 32, TWP. 4S, RNG. 8E, PM

COUNTY White DRILLING METHOD Hollow Stem Auger (8"O.D. 3.25" I.D.) HAMMER TYPE Auto SPT 140 lbs

STRUCT. NO. 097-0023
Station 954+52

BORING NO. 2-S
Station 955+12
Offset 12.0ft Rt
Ground Surface Elev. 387.2 ft

Surface Water Elev. 374.5 ft
Stream Bed Elev. 373.9 ft

Groundwater Elev.:
First Encounter ft
Upon Completion ft
After Hrs. ft

Description	Elev.	DEPTH (ft)	BLOWS	UCS Qu (tsf)	MOIST (%)
Cored Pavement	385.70				
M. Stiff Brown and mottled Grey, Moist SILTY CLAY	382.70		1		
			3	0.6	24
			3	B	
Soft Brown, Moist to V. Moist SILTY CLAY	380.20	-5	WOH		
			1	0.4	32
			2	B	
Stiff Tan-grey, Moist SILTY CLAY	377.70		WOH		
			2	1.4	22
			3	B	
M. Stiff Tan-grey, Moist SILTY CLAY		-10	WOH		
			2	0.9	27
			3	B	
			1		
			3	0.9	25
			5	B	
(Brown-grey and mottled Brown)		-15	1		
			3	0.6	21
			5	B	
Stiff dark Grey and mottled Brown, Moist CLAY	370.20		1		
			2	1.4	22
			4	B	
	367.70	-20	1		

Description	Elev.	DEPTH (ft)	BLOWS	UCS Qu (tsf)	MOIST (%)
Soft dark Grey and mottled Brown, Moist SILTY CLAY *(continued)*			2	0.4	23
			3	B	
M. Stiff dark Grey, Moist CLAY	365.20		1		
			1	0.7	28
			2	B	
V. Soft dark Grey, Moist to V. Moist SANDY LOAM	362.70	-25	1		
			2	0.2	24
			1	B	
% Fines <#200: 33%, non-plastic (Estimated based on visual ID and Lab 07)					
M. Stiff dark Grey, Moist CLAY LOAM	360.20		WOH		
			1	0.6	17
			3	B	
M. Stiff dark Grey, Moist SILTY CLAY LOAM	357.70	-30	1		
			3	0.9	18
			2	S	
V. Stiff dark Grey, Moist SILTY CLAY LOAM	355.20		2		
			8	3.9	14
			10	S	
		-35	3		
			7	2.4	17
			10	S	
V. Stiff dark Grey, Moist SILTY CLAY LOAM with CLAY TILL	350.20		4		
			8	2.8	16
			12	S	
		-40	1		

The Unconfined Compressive Strength (UCS) Failure Mode is indicated by (B-Bulge, S-Shear, P-Penetrometer, E-Estimated)
Abbreviations W.O.H - Sampler Advanced By Weight of Hammer, W.O.P - Advanced by Weight of Pipe, B.S. - Before Seating
The SPT (N value) is the sum of the last two blow values in each sampling zone (AASHTO T206) BBS, from 137 (Rev. 8-99)

File Name S:\MATERIALS GEOTECHNICAL UNIT\GINT\PROJECTS\PROJECTS FILE\WHITE\STRUCTURES\097-0023 US 45 OVER LOST CREEK\097-0023 IL 45 OVER LOST CREEK.GPJ Data Templete D6TEMPLT.GDT Date Printed 6/9/21
Latitude 38 07 35.24 Longitude -88 20 11.81 Datum NAD83 Job Number

Illinois Department of Transportation
Division of Highways
District 9

SOIL BORING LOG

Date 4/2/21

ROUTE US 45 DESCRIPTION Bridge over Lost Creek LOGGED BY L. Estel

SECTION 105,B 105 BY-2 (existing) LOCATION 1.5 mile N of Enfield (near S. Abut.), SEC. 32, TWP. 4S, RNG. 8E, PM

COUNTY White DRILLING METHOD Hollow Stem Auger (8"O.D. 3.25" I.D.) HAMMER TYPE Auto SPT 140 lbs

STRUCT. NO. 097-0023
Station 954+52

BORING NO. 2-S
Station 955+12
Offset 12.0ft Rt
Ground Surface Elev. 387.2 ft

Surface Water Elev. 374.5 ft
Stream Bed Elev. 373.9 ft

Groundwater Elev.:
First Encounter ft
Upon Completion ft
After Hrs. ft

Description	Elev.	DEPTH (ft)	BLOWS	UCS Qu (tsf)	MOIST (%)
V. Stiff dark Grey, Moist SILTY CLAY LOAM with CLAY TILL *(continued)*			6	3.7	16
			10	B	
Hard dark Grey, Moist CLAY	342.70	-45	3		
			7	4.5	18
			11	B	
V. Stiff dark Grey, Moist SILTY CLAY LOAM	337.70	-50	1		
			7	3.5	15
			10	B	
V. Stiff dark Grey, Moist Weathered CLAY SHALE	332.70	-55	5		
			15	3.7	17
			21	S	
Hard Grey, Dry CLAY SHALE	327.70	-60	100/6"		

(Bore hole continued with rock coring)

Bottom of hole @ 69.0 ft

No free water encountered

Ground surface elevation reference to Benchmark WP097-00232, IP&C on W. side of US 45 @ Sta 955+00; Elev. 385.68

Hammer Efficiency: 86.5%
To convert "N" values to "N60", multiply by 1.44

The Unconfined Compressive Strength (UCS) Failure Mode is indicated by (B-Bulge, S-Shear, P-Penetrometer, E-Estimated)
Abbreviations W.O.H - Sampler Advanced By Weight of Hammer, W.O.P - Advanced by Weight of Pipe, B.S. - Before Seating
The SPT (N value) is the sum of the last two blow values in each sampling zone (AASHTO T206) BBS, from 137 (Rev. 8-99)

File Name S:\MATERIALS GEOTECHNICAL UNIT\GINT\PROJECTS\PROJECTS FILE\WHITE\STRUCTURES\097-0023 US 45 OVER LOST CREEK\097-0023 IL 45 OVER LOST CREEK.GPJ Data Templete D6TEMPLT.GDT Date Printed 6/9/21
Latitude 38 07 35.24 Longitude -88 20 11.81 Datum NAD83 Job Number

Illinois Department of Transportation
Division of Highways
District 9

ROCK CORE LOG

Date 4/2/21

ROUTE US 45 **DESCRIPTION** Bridge over Lost Creek **LOGGED BY** L. Estel

SECTION 105,B 105 BY-2 (existing) **LOCATION** 1.5 mile N of Enfield (near S. Abut.), **SEC.** 32, **TWP.** 4S, **RNG.** 8E, **PM**

COUNTY White **CORING METHOD** Conventional rotary with polymer

STRUCT. NO. 097-0023
Station 954+52

CORING BARREL TYPE & SIZE NV3 5FT NWJ

Core Diameter 1.78 in
Top of Rock Elev. 327.70 ft
Begin Core Elev. 327.20 ft

BORING NO. 2-S
Station 955+12
Offset 12.0ft Rt
Ground Surface Elev. 387.2 ft

	DEPTH (ft)	CORE (#)	RECOVERY (%)	R.Q.D. (%)	CORE TIME (min/ft)	STRENGTH (tsf)
Hard Grey, Dry CLAY SHALE, Fined Grained, Field Hardness: Low 60.0 to 64.0 ft		1	69	50	10	101.9
Hard Grey, Dry CLAY SHALE, Fined Grained, Field Hardness: Low 64.0 to 65.25 ft	-65	2	100	17	10	
(Field Hardness: Low with layers that are Friable 65.25 to 69.0 ft)						35.5
						26.6
	318.20					
Bottom of hole @ 69.0 feet	-70					
Ground surface elevation referenced to Benchmark WP097-00232, IP&C on W. side of US 45 @ Sta 955+00; Elev. 385.68	-75					
	-80					

Color pictures of the cores Yes, attached
Cores will be stored for examination until 5 Years after Construction
The "Strength" column represents the uniaxial compressive strength of the core sample (ASTM D-2938)
RQD is the ratio of the total length of sound core specimens >4" to total length of core run

BBS, form 138 (Rev. 8-99)

ROCK CORE 097-0023 IL 45 OVER LOST CREEK.GPJ D6TEMPLT.GDT 6/9/21

MODEL: PLOT
FILE NAME: Y:\IDOT\1359-13_78833\CADD\SP SN 097-0083\0970083-78833-24-BoringLogs.dgn

ESCA CONSULTANTS, INC.

USER NAME = nhc	DESIGNED - ELH	08/23	REVISED -	STATE OF ILLINOIS DEPARTMENT OF TRANSPORTATION	BORING LOGS STRUCTURE NO. 097–0083
ESCA PROJECT NO. 1359.13	CHECKED - ELH	08/23	REVISED -		
PLOT SCALE = 0:2 ':" / in.	DRAWN - NHC	07/23	REVISED -		
PLOT DATE = 2/2/2024	CHECKED - ELH	08/23	REVISED -		SHEET 24 OF 24 SHEETS

F.A.P. RTE.	SECTION	COUNTY	TOTAL SHEETS	SHEET NO.
328	105B-3	WHITE	71	58
		CONTRACT NO. 78833		
		ILLINOIS FED. AID PROJECT		

2/2/2024 10:38:26 AM

B.M: Chiseled "a" on S.W. Wing of Bridge Sta. 954+52 Elev. 387.84
Existing Structure: Built as S.B.I. Rte. 140, Sec. 105B, Sta. 954+52 in 1928. Superstructure: R.C. Deck Girder. Substructure: R.C. Closed Abuts. Structure to be widened with P.P.C. beams utilizing stage construction.
Existing handrail and posts to be salvaged.

STATE OF ILLINOIS
DEPARTMENT OF TRANSPORTATION

ROUTE NO.	SECTION	COUNTY	TOTAL SHEETS	SHEET NO.
S.B.I. 140 / F.A.	105 B1-2	WHITE	9	5
FED. ROAD DIST. NO. 7	ILLINOIS	FED. AID PROJECT-		

SHEET NO. 5 OF 9 SHEETS

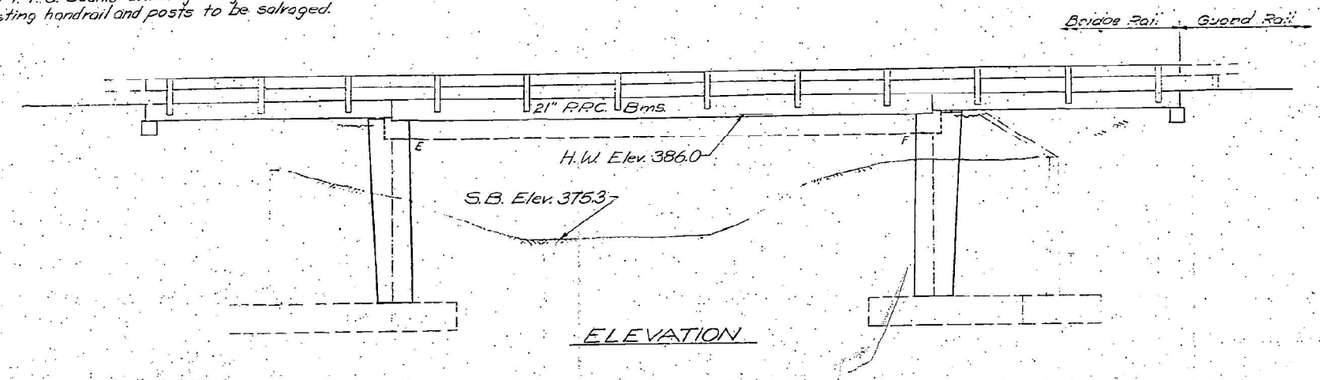

ELEVATION

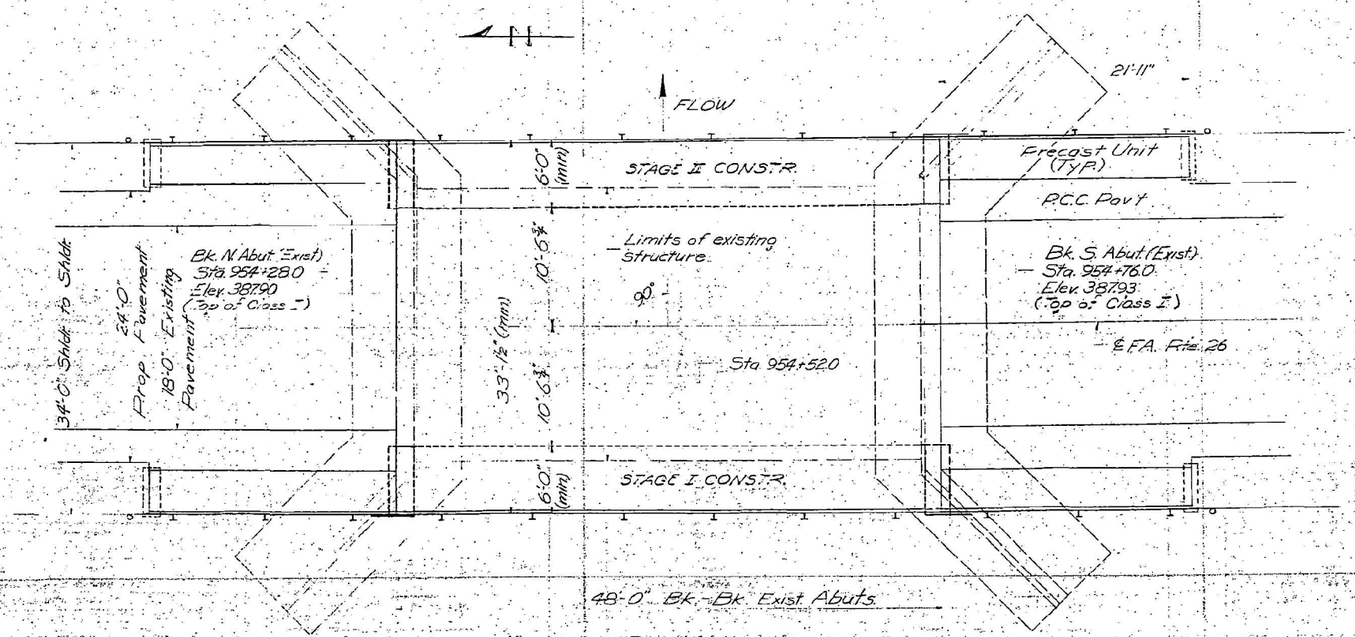

PLAN

GENERAL NOTES

All reinforcement bars shall be spaced 2" o. o. unless otherwise shown.

It shall be the responsibility of the Contractor to verify all dimensions and conditions existing in the field prior to construction and ordering of materials.

Expansion bolts shall consist of self drilling expansion anchors and ¾"ø hooked bolts. Hooked bolts shall extend a minimum of 12" into new concrete unless otherwise shown.

Shoulder transition to windwall shall be shaped with broken concrete. Cost Incidental.

The top surface of the beams shall be finished in accordance with Art. 505.06 of the Standard Specifications except that the surface shall not be roughened by broaming. The finished surface shall be free of depressions and high spots with sharp corners.

TOTAL BILL OF MATERIAL

Item	Unit	Super	Sub	Total
5½" Conc. Surf. Cse. Cl. I	Cu. Yds.	20		20
Waterproofing Membrane System	Sq. Yds.	86		86
* Portland Cement Concrete Pavement (10")	Sq. Yds.	37		37
Pavement Fabric	Sq. Yds.	37		37
Concrete Removal	Cu. Yds.	9	6	15
Expansion Bolts (¾"ø)	Each	56	124	180
Class X Concrete	Cu. Yds.		21.5	21.5
Precast Concrete Bridge Slab	Sq. Ft.	329		329
Precast Prestressed Conc. Dk. Bms (21")	Sq. Ft.	576		576
Steel Railing, Type S	Lin. Ft.	184		184
Reinforcement Bars	Lbs.		770	770
Temporary Guardrail	Lin. Ft.	68		68
Bit. Conc. Surf. Removal	Sq. Yds.	113		113
* Portland Cement Mortar Fairing Cse.	Lin. Ft.	192		192

* See Special Provisions.

WATERWAY INFORMATION

Drainage Area: 17 sq. miles
Character: rolling, clay, wooded, cultivated
Present Opening: Main Structure 325 sq. ft.
Overflow Culvert 150 sq. ft.
~~Required Opening: Total 475 sq. ft.~~
Proposed Opening: Total 475 sq. ft.
$Q_{(50)}$: 3200 cfs
All Time H.W. Elev. = 387.4 (1950)

DESIGN STRESSES

FIELD UNITS
fc = 1000 psi (Sub)
fs = 20000 psi (Reinf.)
n = 10

PRECAST UNITS
fc = 4500 psi
fc = 1800 psi
fs = 20000 psi
n = 8

PRECAST PRESTRESSED UNITS
f'c = 5000 psi
fci = 4000 psi
fs = 270,000 psi 7/16 ø Strands
fsi = 188,700 psi 7/16 ø Strands

LOADING HS20-44 (New Constr.)

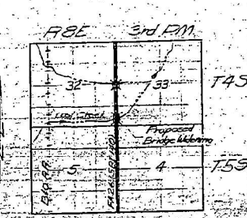

LOCATION SKETCH

GENERAL PLAN & ELEVATION
F.A. RTE. 88 (S.B.I. 140) over LOST CREEK
F.A. RTE. 88 (S.B.I. 140) - SEC. 105-B1-2
WHITE COUNTY
STA. 954+52.0

DESIGNED	W.H.	
CHECKED	W.H.	
J. SCHNELLER		
DRAWN		
CHECKED	W.H.	

March 4, 1974
EXAMINED
PASSED
APPROVED R. Hanley DIRECTOR OF HIGHWAYS

Rev. W.H. 9-5-75
Revised 4-29-77
Revised 8-16-77

MODEL: PLOT
FILE NAME: Y:\DOT\1359-13-78833\CADD\Highway\CADD Sheets\0978833-sht-rem101.dgn

ESCA CONSULTANTS, INC.

USER NAME = IRC	DESIGNED - IRC	REVISED -	
ESCA PROJECT NO. 1359.13	DRAWN - IRC	REVISED -	
PLOT SCALE = 0.1667 ' / in.	CHECKED - ELH	REVISED -	
PLOT DATE = 8/9/2024	DATE - 09/23	REVISED -	

STATE OF ILLINOIS
DEPARTMENT OF TRANSPORTATION

SN 097-0023 EXISTING STRUCTURE PLANS
FOR INFORMATION ONLY

SCALE: AS SHOWN | SHEET NO. 1 OF 7 SHEETS | STA. | TO STA.

F.A.P. RTE.	SECTION	COUNTY	TOTAL SHEETS	SHEET NO.
328	105B-3	WHITE	71	59

CONTRACT NO. 78833
ILLINOIS | FED. AID PROJECT

STATE OF ILLINOIS
DEPARTMENT OF TRANSPORTATION

ROUTE NO.	SECTION	COUNTY	TOTAL SHEETS	SHEET NO.
F.A.P. 140	105 BY-2	WHITE	9	6
FED. ROAD DIST. NO. 7		ILLINOIS	FED. AID PROJECT	

SHEET NO. 2
5 SHEETS

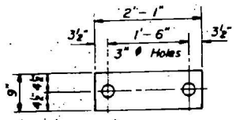

FABRIC BEARING PAD

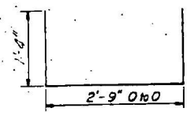

U BAR

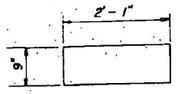

GRAPHITED ASBESTOS BEARING PAD

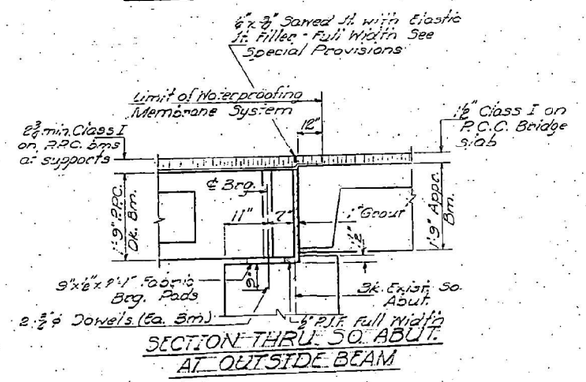

SECTION THRU SO. ABUT. AT OUTSIDE BEAM

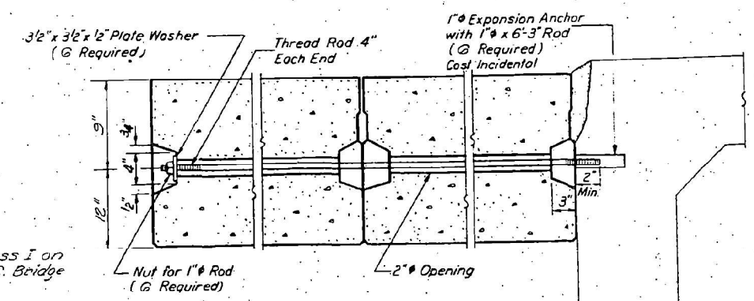

TYPICAL TRANSVERSE TIE ASSEMBLY

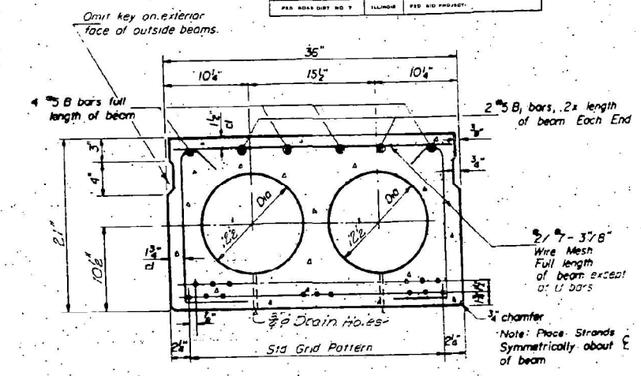

TYPICAL SECTION

7/16" ϕ Strands Each Strand Stressed to 21,700 lbs
5 Strands 1¾" up, 3 Strands 3½" up

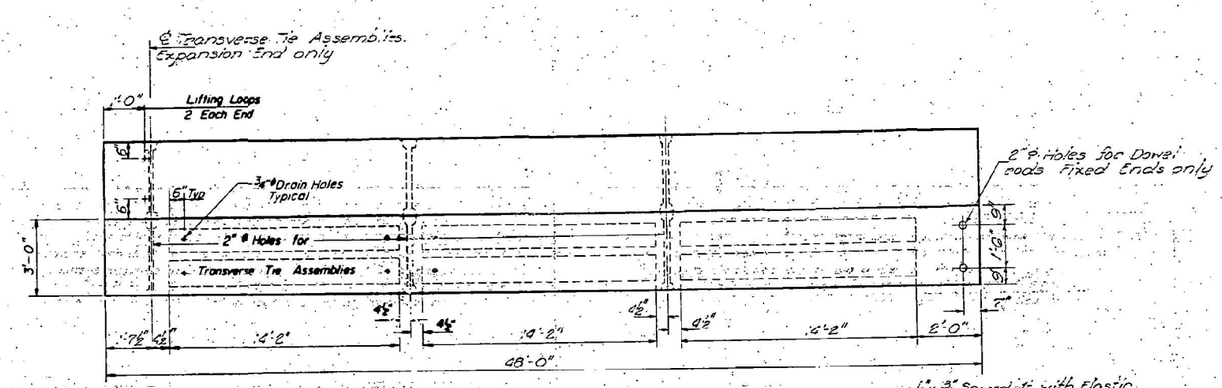

PLAN

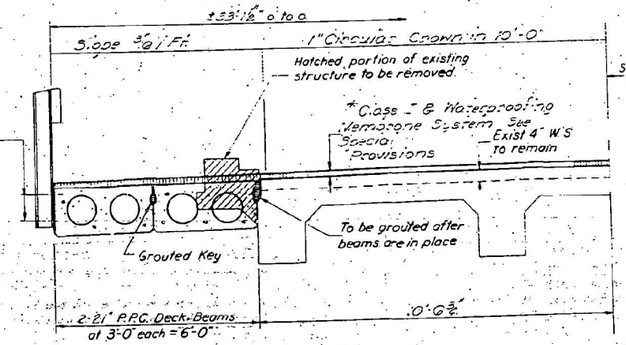

HALF CROSS SECTION

Note: Remove existing bituminous surface course on bridge.
* 1½" Class I on Exist. deck & variable thickness of Class I on P.P.C. Deck Beams.

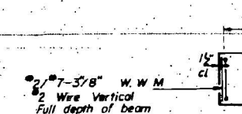

END PLAN

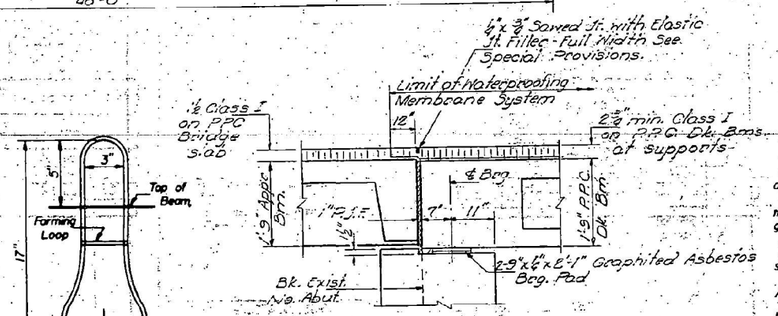

SECTION THRU NO. ABUT. AT OUTSIDE BEAM

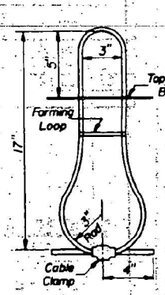

LIFTING LOOP DETAIL

GENERAL NOTES

Prestressing steel shall be non-galv. extra high strength, stress-relieved 7-wire strand. The nominal diameter shall be 7/16" and the nominal cross-sectional area shall be 0.115 sq in. Lifting loops shall be ⅝" diameter, 6x19 class wire rope with fiber core and shall have a minimum ultimate tensile strength of 23,000 lbs.

The 1"ϕ rods in the transverse tie assembly shall be tightened to a snug fit and the nuts set. Pockets that receive transverse tie bar on outside beam shall be filled with grout after transverse tie assembly is in place.

Longitudinal shear keys shall be packed with a very dry mix of 2:1 sand and P.C. mortar.

After beams have been erected, holes for the dowel anchors shall be drilled into the sub-structure and the anchor dowels shall be grouted in place.

Dowel rods shall be F.A.S.H.O. M227 or AASHO M31. Transverse tie rods shall be AASHO M227 Grade 70-80.

After fabrication the transverse tie assemblies (tie rods, nuts, washers and sleeves) shall be hot-dipped galvanized in accordance with AASHO Designation M232.

Cost of reinforcement and accessories cast into the beam, of bearing pads, of armor angles, and of grouting longitudinal shear keys is included in unit price bid for "Precast Prestressed Concrete Deck Beams".

See sheet #3 for Cross Section showing Stage Construction.

BILL OF MATERIAL

Item	Unit	Quantity
Precast Prestressed Concrete Deck Beams (21")	Sq. Ft.	572
Concrete Removal	Cu. Yds.	9
Bituminous Concrete Surface Removal	Sq. Yds.	13

SUPERSTRUCTURE
F.A. RT. 26 SEC. 105 BY-2
WHITE COUNTY
STA. 954+52.0

DESIGNED	R. L. Gill	
CHECKED	W. E. Haines	
DRAWN	J. SCHNELLER	
CHECKED	W. H.	

March 4 1974

EXAMINED
PASSED H. E. Baumann
APPROVED Harry R. Hanley
DIRECTOR OF HIGHWAYS

SW-1 (5-15-71)

MODEL: PLOT
FILE NAME: V:\IDOT\13359-13_78833\CADD\Highway\CADD Sheets\0978833-sht-rm102.dgn

ESCA CONSULTANTS, INC.

USER NAME = IRC	DESIGNED - IRC	REVISED -	
ESCA PROJECT NO. 1359.13	DRAWN - IRC	REVISED -	
PLOT SCALE = 0.1667 ' / in.	CHECKED - ELH	REVISED -	
PLOT DATE = 8/9/2024	DATE - 09/23	REVISED -	

STATE OF ILLINOIS
DEPARTMENT OF TRANSPORTATION

SN 097-0023 EXISTING STRUCTURE PLANS
FOR INFORMATION ONLY

SCALE: AS SHOWN | SHEET NO. 2 OF 7 SHEETS | STA. | TO STA.

F.A.P. RTE.	SECTION	COUNTY	TOTAL SHEETS	SHEET NO.
328	105B-3	WHITE	71	60
		CONTRACT NO. 78833		
		ILLINOIS	FED. AID PROJECT	

STATE OF ILLINOIS
DEPARTMENT OF TRANSPORTATION

ROUTE NO.	SECTION	COUNTY	TOTAL SHEETS	SHEET NO.
F.A.P. 140 / F.A.	105 BY-2	WHITE	9	7
FED. ROAD DIST. NO. 7	ILLINOIS	FED. AID PROJECT		

SHEET NO. 3 / 5 SHEETS

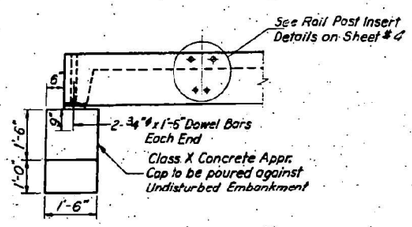

VIEW B-B

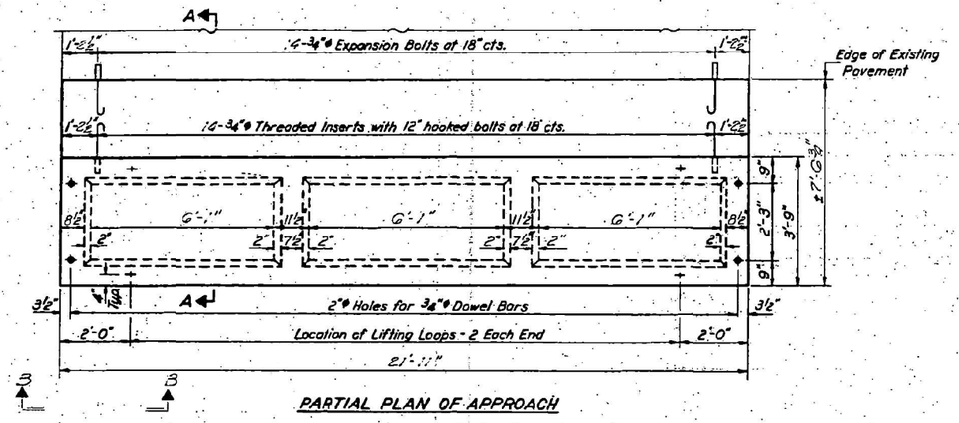

PARTIAL PLAN OF APPROACH

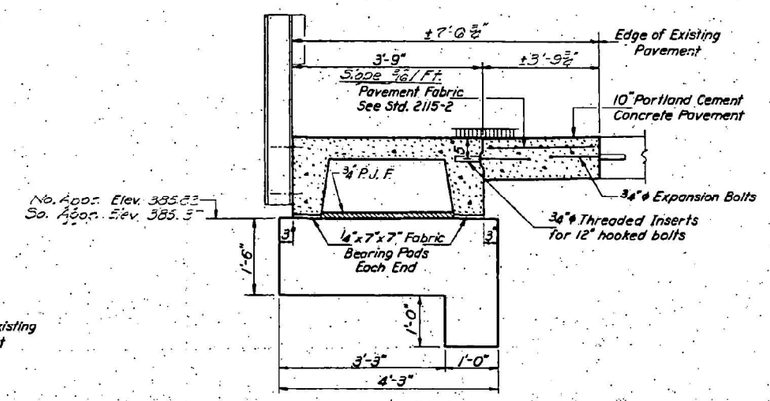

SECTION A-A

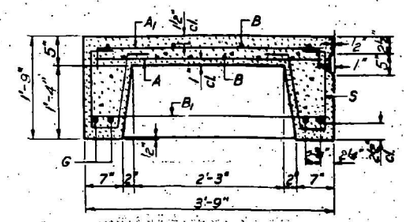

SECTION THRU PRECAST UNIT

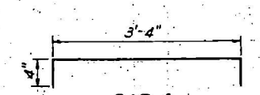

BAR A1

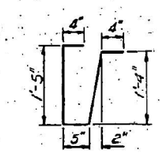

BAR S

BAR LIST - ONE UNIT

Reinforcement to be cast into slab

Bar	No	Size	Length	Shape
A	58	#4	3'-3"	—
A1	29	#4	4'-0"	⊓
B	10	#4	8'-6"	—
B1	8	#4	3'-6"	—
G	4	#10	2'-6"	—
S	60	#3	5'-10"	⊓

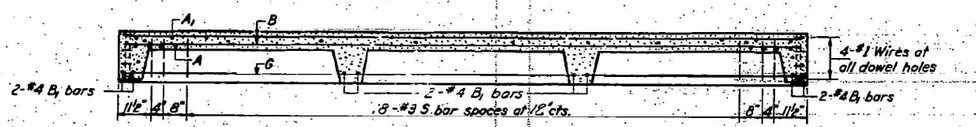

LONGITUDINAL SECTION

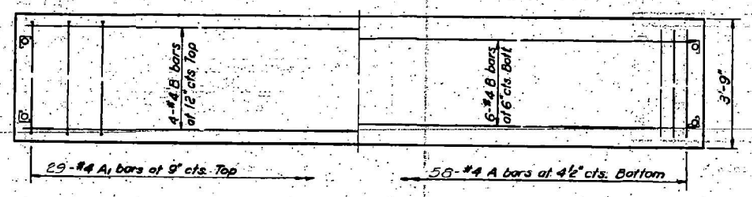

SLAB REINFORCEMENT

NOTES

Unless otherwise approved by the Engineer, lifting loops shall be ½"φ, 6x19 class wire rope with fiber core and shall have a minimum ultimate strength of 18,700 lbs. Loops shall be burned off after slab has been erected.

Holes shall be drilled and anchor dowels grouted in place.

Cost of reinforcement and accessories cast into the slab unit, bearing pads, furnishing, drilling for, placing and grouting anchor dowels and 3/4"φ hooked bolts is included in Unit bid price for "Precast Concrete Bridge Slab."

The Precast Concrete Bridge Slab shall be erected and aligned with the exterior face of the exterior Deck Beam after Deck Beams are in final position.

FOUR APPROACHES

BILL OF MATERIAL

Item	Unit	Quantity
Precast Concrete Bridge Slab	Sq. Ft.	329
Portland Cement Concrete Pavement (10")	Sq. Yds.	37
Pavement Fabric	Sq. Yds.	37
Expansion Bolts 3/4"φ	Each	56
Class X Concrete	Cu. Yds.	1.6

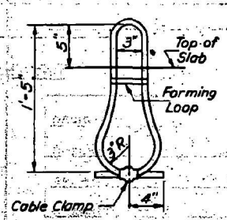

LIFTING LOOP DETAIL

STRESSES

f_c = 4,500 psi.
f_c = 1,800 psi.
f_s = 20,000 psi.
n = 8

LOADING HS-20

DESIGNED
CHECKED
DRAWN J. SCHNELLER
CHECKED

EXAMINED
PASSED W. E. Baumann
APPROVED Henry R. Hanley
DIRECTOR OF HIGHWAYS

APPROACH DETAILS

F.A. RT. 26 SEC. 105-BY-2
WHITE COUNTY
STA. 954+52.00

AP-4 >20' Precast Appr. Unit (Rt. 2) (5-15-71)

ESCA CONSULTANTS, INC.	USER NAME = IRC	DESIGNED - IRC	REVISED -
	ESCA PROJECT NO. 1359.13	DRAWN - IRC	REVISED -
	PLOT SCALE = 0.1667 ' / in.	CHECKED - ELH	REVISED -
	PLOT DATE = 8/9/2024	DATE - 09/23	REVISED -

STATE OF ILLINOIS
DEPARTMENT OF TRANSPORTATION

SN 097-0023 EXISTING STRUCTURE PLANS FOR INFORMATION ONLY

SCALE: AS SHOWN | SHEET NO. 3 OF 7 SHEETS | STA. TO STA.

F.A.P. RTE.	SECTION	COUNTY	TOTAL SHEETS	SHEET NO.
328	105B-3	WHITE	71	61
		CONTRACT NO. 78833		
		ILLINOIS	FED. AID PROJECT	

MODEL: PLOT
FILE NAME: YUIDOT\13359-13_78833\CADD\Highway\CADD Sheets\0978833-sht-rem103.dgn

STATE OF ILLINOIS
DEPARTMENT OF TRANSPORTATION

ROUTE NO.	SECTION	COUNTY	TOTAL SHEETS	SHEET NO.
F.A. 140	105 BY-2	WHITE	9	8
FED. ROAD DIST. NO. 7	ILLINOIS	FED. AID PROJECT		

SHEET NO. 4
5 SHEETS

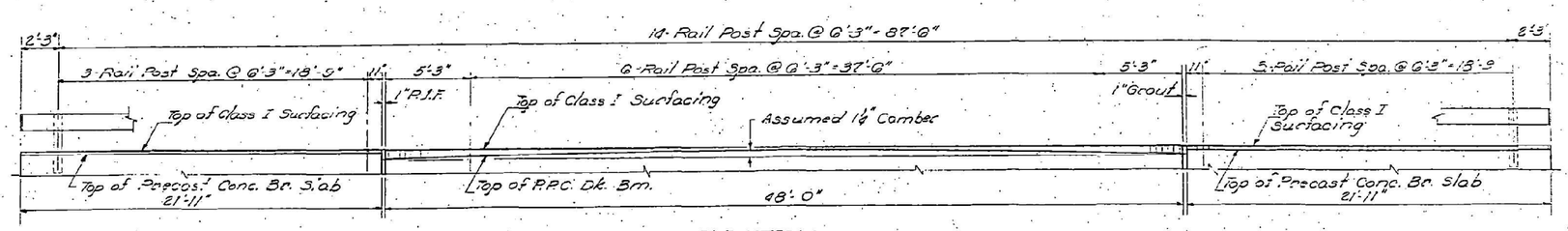

ELEVATION
(Showing inside face of rail)

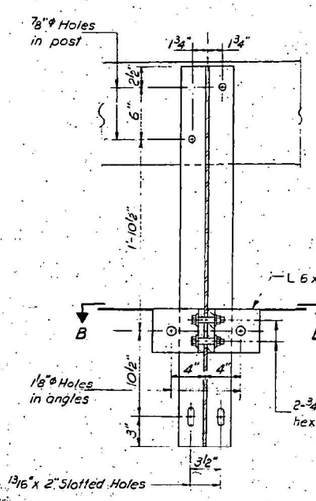

SECTION A-A

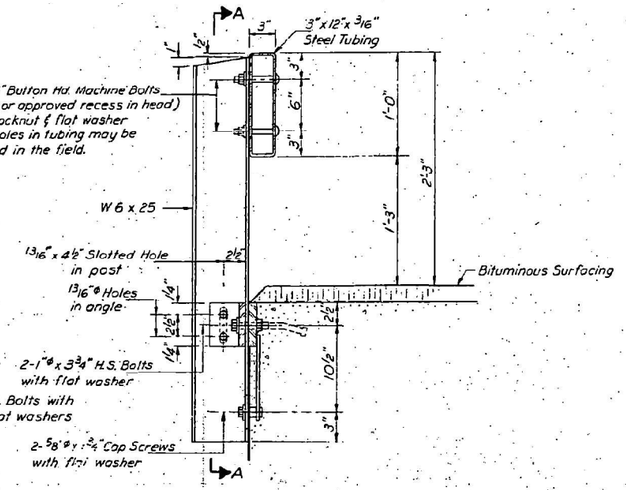

SECTION AT RAIL POST

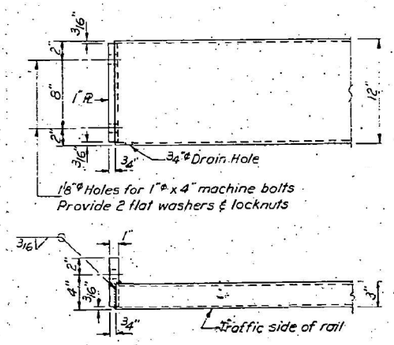

END OF RAIL DETAILS

NOTES

Hollow structural steel tubing shall conform to the requirements of A.S.T.M. designation A-500 Grade B or A-501 Structural Steel Tubing.

All other steel shapes and plates shall conform to the requirements of AASHTO designation M-183 except posts shall conform to AASHTO M-183.

Bolts, cap screws, and nuts shall conform to the requirement of A.S.T.M. designation A-307 except for high strength bolts, nuts and washers noted which shall conform to AASHTO designation M-164.

All bolts, nuts, cap screws, washers and lock washers shall be galvanized in accordance with AASHTO designation M-232.

All posts, railing, rail splices, anchor devices and angles shall be galvanized after shop fabrication in accordance with AASHTO M-111 and A.S.T.M. A-385. Galvanized rail shall not be painted.

Railing shall be in accordance with Section 508 of the Standard Specifications, except as noted, and shall be paid for at the contract unit price per lineal foot for STEEL RAILING, TYPE S.

All field drilled holes shall be coated with an approved zinc rich paint before erection.

The lower portion of the post flange in contact with concrete shall receive two coats of asphalt paint conforming to Section 714.08 Type B or place ⅛" fabric bearing pad between the post and concrete.

The ¾"φ high strength bolts used to connect the 6 x 4 x ¾ angles to the post shall be tightened in accordance with Article 710.11 of the Standard Specifications. The 1"φ high strength bolts connecting the angles to the concrete shall be tightened to a snug fit and given an additional ⅛ turn.

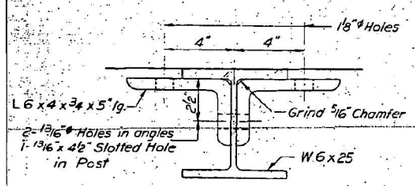

SECTION B-B

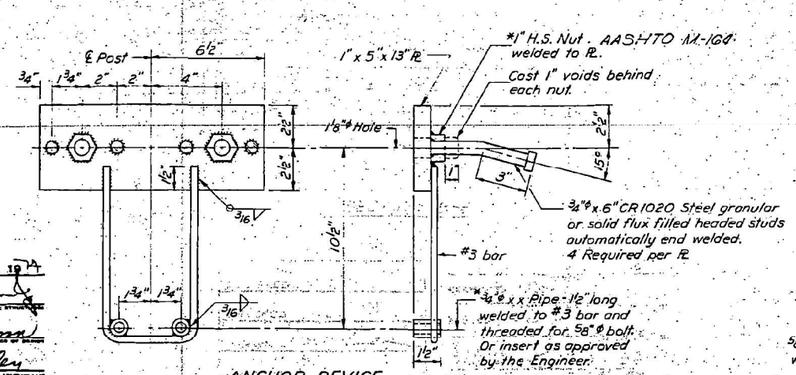

ANCHOR DEVICE

*Threaded areas shall be plugged or blocked off during casting of beam.

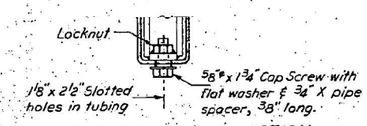

RAIL SPLICE CONNECTION
AT EXPANSION JT.
AT NO. ABUT.

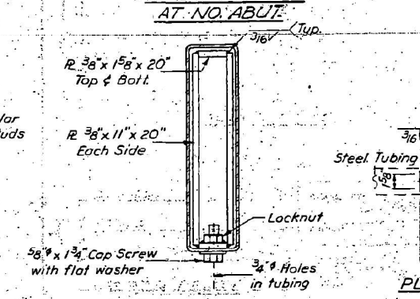

SECTION AT RAIL SPLICE

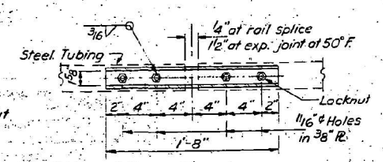

PLAN - BOTT. SPLICE PL
TYPICAL

BILL OF MATERIAL

Item	Unit	Quantity
Steel Railing, Type S	Lin. Ft.	188

TYPE S
STEEL RAILING
F.A. RT. 26 SEC. 105-BY-2
WHITE COUNTY
STA. 954+52.00

DESIGNED		
CHECKED		
DRAWN	J. SCHNELLER	
CHECKED		

EXAMINED — MARCH 4 19 74
PASSED
APPROVED — DIRECTOR OF HIGHWAYS

R-23 (12-10-71) (6'-3" Maximum Post Spacing)

ESCA CONSULTANTS, INC.

USER NAME = IRC	DESIGNED - IRC	REVISED -	
ESCA PROJECT NO. 1359.13	DRAWN - IRC	REVISED -	
PLOT SCALE = 0.1667 ' / in.	CHECKED - ELH	REVISED -	
PLOT DATE = 8/9/2024	DATE - 10/23	REVISED -	

STATE OF ILLINOIS
DEPARTMENT OF TRANSPORTATION

SN 097-0023 EXISTING STRUCTURE PLANS
FOR INFORMATION ONLY

SCALE: AS SHOWN | SHEET NO. 4 OF 7 SHEETS | STA. | TO STA.

F.A.P. RTE.	SECTION	COUNTY	TOTAL SHEETS	SHEET NO.
328	105B-3	WHITE	71	62
		CONTRACT NO. 78833		
	ILLINOIS	FED. AID PROJECT		

MODEL: PLOT
FILE NAME: X:\IDOT\1359-13_78833\CADD\Highway\CADD Sheets\0978833-sht-rail104.dgn

ROUTE NO.	SECTION	COUNTY	TOTAL SHEETS	SHEET NO.
F.A. 140	105 BY-2	WHITE	9	9
FED. ROAD DIST. NO. 7	ILLINOIS	FED. AID PROJECT		

SHEET NO. 5
5 SHEETS

STATE OF ILLINOIS
DEPARTMENT OF TRANSPORTATION

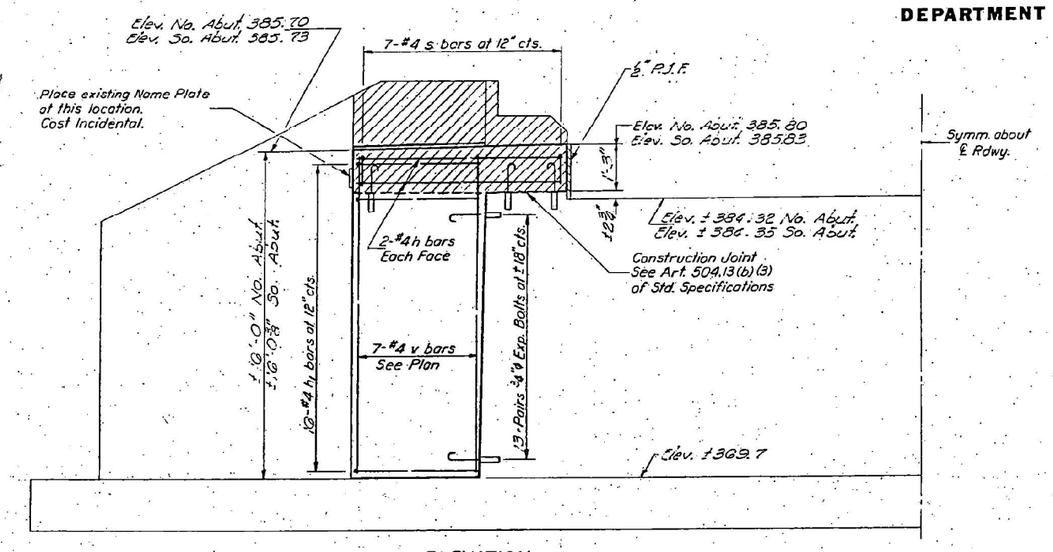

ELEVATION

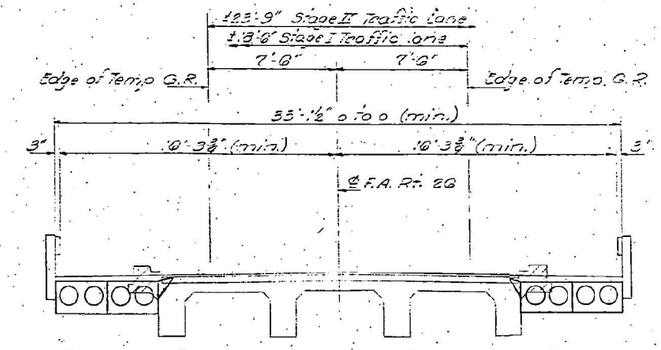

CROSS SECTION
(Showing Stage Construction)

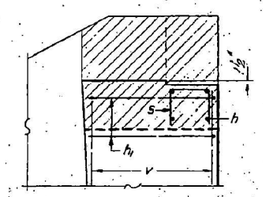

VIEW A-A

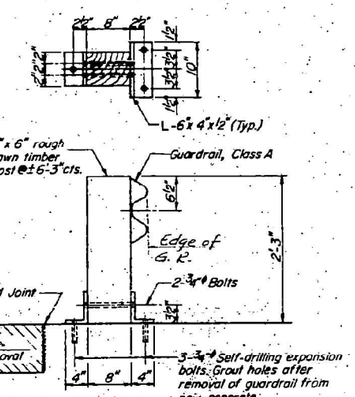

TEMPORARY GUARDRAIL DETAIL
See Special Provisions
Repair damaged waterproofing overlap 1st stage waterproofing with 2nd stage waterproofing.

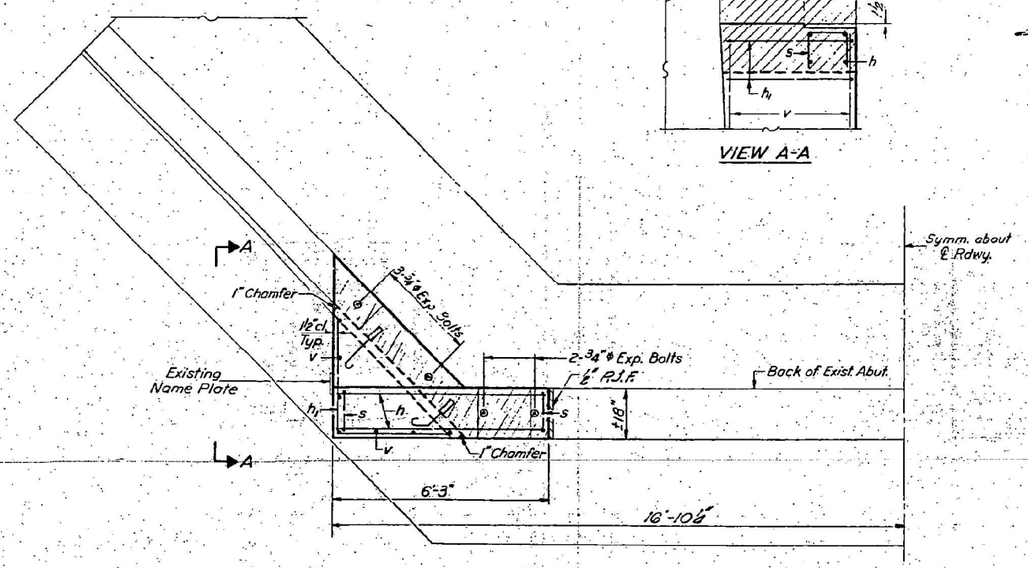

PLAN

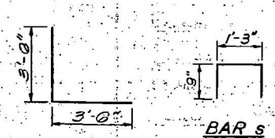

BAR h₁

BAR s

TWO ABUTMENTS
BILL OF MATERIAL

Bar	No.	Size	Length	Shape
h	16	#4	6'-0"	
h₁	64	#4	7'-5"	L
s	28	#4	2'-9"	⊓
v	28	#4	15'-9"	
Class X Concrete			Cu.Yds.	20.3
Reinforcement Bars			Lbs.	7:0
Expansion Bolts ¾"ø			Each	24
Concrete Removal			Cu.Yds.	4

NOTES:
Hatched area indicates Concrete Removal. Reinforcement extending into removed area shall be cleaned and incorporated into the new construction.
Expansion bolts shall be anchored in sound concrete.
All edges shall have standard ¾" chamfers except as noted.

ABUTMENTS
F.A. RT. 20 SEC. 105-3Y-2
WHITE COUNTY
STA. 954+52.00

DESIGNED
CHECKED
DRAWN J. SCHNELLER
CHECKED

EXAMINED — MARCH 4, 19 24
PASSED
APPROVED — DIRECTOR OF HIGHWAYS

A-8 For Dk Bm Widening (5-15-71)

ESCA CONSULTANTS, INC.	USER NAME = IRC	DESIGNED - IRC	REVISED -
	ESCA PROJECT NO. 1359.13	DRAWN - IRC	REVISED -
	PLOT SCALE = 0.1667 ' / in.	CHECKED - ELH	REVISED -
	PLOT DATE = 8/9/2024	DATE - 09/23	REVISED -

STATE OF ILLINOIS
DEPARTMENT OF TRANSPORTATION

SN 097-0023 EXISTING STRUCTURE PLANS
FOR INFORMATION ONLY

SCALE: AS SHOWN | SHEET NO. 5 OF 7 SHEETS | STA. | TO STA.

F.A.P. RTE.	SECTION	COUNTY	TOTAL SHEETS	SHEET NO.
328	105B-3	WHITE	71	63
		CONTRACT NO. 78833		
		ILLINOIS	FED. AID PROJECT	

MODEL: PLOT
FILE NAME: YUDOT13359-13_78833\CADD\Highway\CADD Sheets\0978833-sht-rem105.dgn

STATE OF ILLINOIS
DEPARTMENT OF PUBLIC WORKS & BUILDINGS
DIVISION OF HIGHWAYS

BOND ISSUE ROUTE NO.	COUNTY	SEC.	TOTAL SHEETS	SHEET NO.
140	White	105B	72	71

SHEET NO 3 SHEETS

REINFORCED CONCRETE DECK GIRDER

SPAN 45 FEET ROADWAY 22 FEET

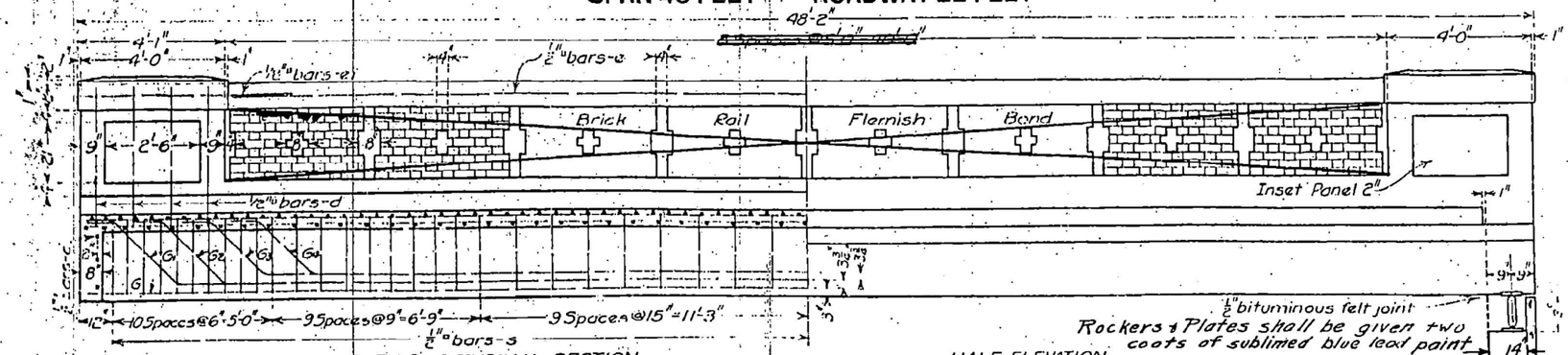

HALF LONGITUDINAL SECTION.

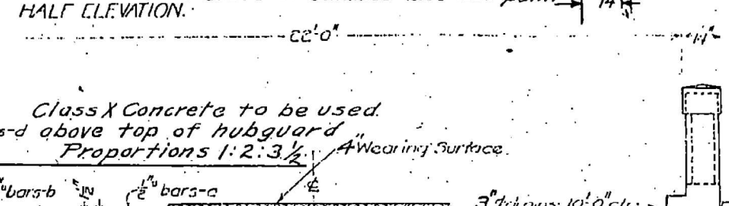

HALF ELEVATION.

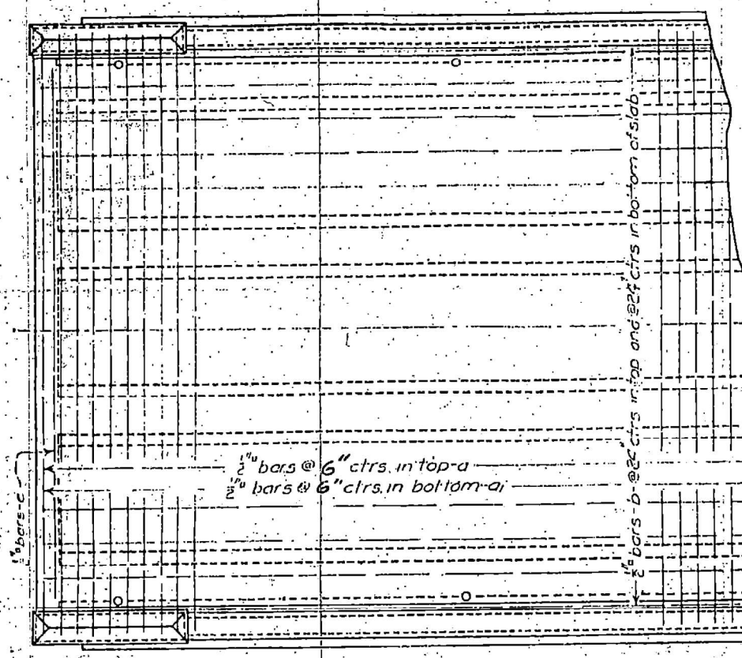

HALF PLAN.

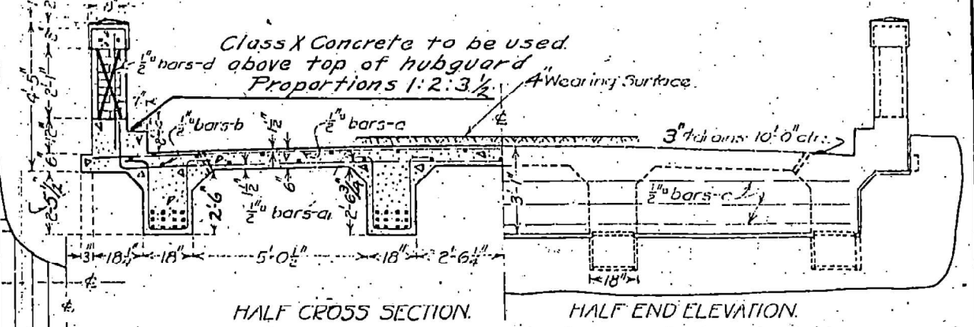

HALF CROSS SECTION. HALF END ELEVATION.

SPINDEL RAIL
BILL OF MATERIAL

Bars	No	Size	Length
a	96	1/2" ϕ	24'-0"
a1	96	1/2" ϕ	25'-0"
b	46	1/2" ϕ	25'-0"
c	6	1/2" ϕ	21'-0"
d	80	1/2" ϕ	3'-6"
e	8	1/2" ϕ	13'-6"
e1	8	1/2" ϕ	6'-0"
G	16	1 1/4" ϕ	47'-6"
G1	8	1 1/4" ϕ	49'-0"
G2	8	1 1/4" ϕ	46'-0"
G3	8	1 1/4" ϕ	43'-0"
G4	8	1 1/4" ϕ	40'-0"
e2	4	1/2" ϕ	12'-3"
s	228	1/2" ϕ	8'-0"
Reinforcing Steel-Lbs			18650
Class A Concrete-Cu Yds			56.5
Class X Concrete			7.4
4" C.I. Rockers-Lbs.			800
8 Steel Plates-Lbs			290
4" P.C.C. Pavement-Sq Yds.			112
Name Plate			1

Class A Concrete to be used below top of hubguard. Proportions 1:2 1/2:4.

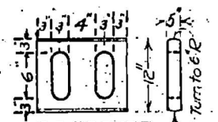

C.I. ROCKER
4 Required

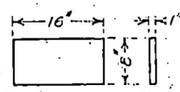

STEEL PLATE
8 Required
Surface adjacent to Rockers to be planed.

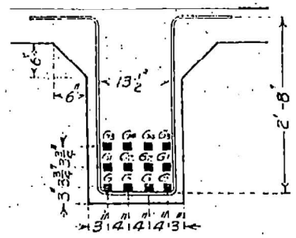

STIRRUP BARS-S

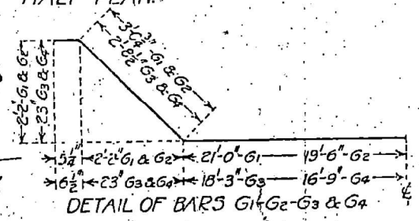

DETAIL OF BARS G1-G2-G3 & G4

Lost Creek Bridge
S.B.I. Rte. 140 Sect. 105-B
White County
Station 954+52

1007

STANDARD	COMPUTED	K.B.Y. Khawas	EXAMINED June 14, 1928
	CHECKED	C.C. Wood	
	DRAWN	K.B.Y.	PASSED
	CHECKED	H.W. Busche	BRIDGE ENGINEER
SPECIAL	ASSEMBLED	H. Anderson	APPROVED
	CHECKED	J.E. Graham	CHIEF HIGHWAY ENGINEER

BM. #68 S.&W. in dead Maple tree left Sta. 968+45 Elev. 384.78
Existing Structure, Steel truss, 48' Span, 14' Rdy. to be removed by Bridge Contractor.
Elev. of Floor of Old Bridge = 386.1

STATE OF ILLINOIS
DEPARTMENT OF PUBLIC WORKS AND BUILDINGS
DIVISION OF HIGHWAYS

R. C. ABUTMENTS FOR DECK GIRDER BRIDGE
HEIGHT OVER ALL 20 FEET 6 INCHES

Sheet No. 3
3 Sheets.

BOND ISSUE ROUTE NO.	COUNTY	SEC.	TOTAL SHEETS	SHEET NO.
140	White	105B	72	71

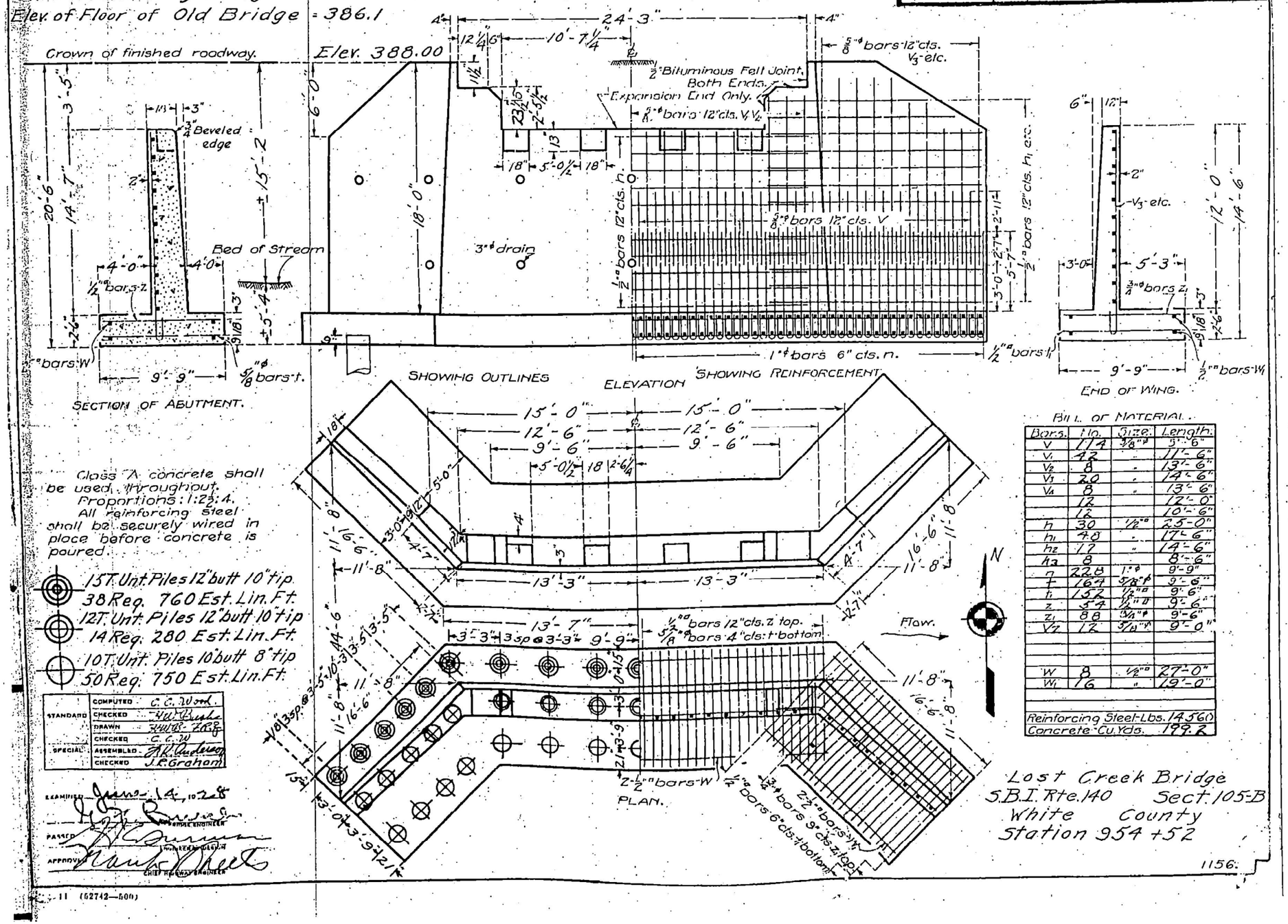

Class "A" concrete shall be used throughout.
Proportions: 1:2½:4.
All reinforcing steel shall be securely wired in place before concrete is poured.

15 T. Unt. Piles 12" butt 10" tip
38 Req. 760 Est. Lin. Ft.
12 T. Unt. Piles 12" butt 10" tip
14 Req. 280 Est. Lin. Ft.
10 T. Unt. Piles 10" butt 8" tip
50 Req. 750 Est. Lin. Ft.

STANDARD	COMPUTED	C. C. Wood
	CHECKED	H. W. Bushe
	DRAWN	H. W. B. - R. R. B.
	CHECKED	C. C. W.
SPECIAL	ASSEMBLED	F. K. Anderson
	CHECKED	J. R. Graham

EXAMINED June 14, 1928
ASSISTANT ENGINEER
PASSED
ASSISTANT ENGINEER
APPROVED
CHIEF HIGHWAY ENGINEER

BILL OF MATERIAL.

Bars.	No.	Size.	Length.
V	174	5/8" ϕ	5'-6"
V_1	42	"	11'-6"
V_2	8	"	13'-6"
V_3	20	"	14'-6"
V_4	8	"	13'-6"
	12		12'-0"
	12		10'-6"
h	30	1/2" □	25'-0"
h_1	48	"	17'-6"
h_2	12	"	14'-6"
h_3	8	"	8'-6"
n	228	1" ϕ	9'-9"
f	164	5/8" ϕ	9'-6"
t	152	1/2" □	9'-6"
z	54	1/2" □	9'-6"
z_1	88	5/8" ϕ	9'-6"
V_7	12	5/8" ϕ	9'-0"
W	8	1/2" □	27'-0"
W_1	16	"	19'-0"
Reinforcing Steel-Lbs.			14560
Concrete-Cu. Yds.			199.2

Lost Creek Bridge
S.B.I. Rte. 140 Sect. 105-B
White County
Station 954+52

1156.

11 (62742—500)

USER NAME = IRC	DESIGNED - IRC	REVISED -	
ESCA PROJECT NO. 1359.13	DRAWN - IRC	REVISED -	
PLOT SCALE = 0.1667 ' / in.	CHECKED - ELH	REVISED -	
PLOT DATE = 8/9/2024	DATE - 10/23	REVISED -	

ESCA CONSULTANTS, INC.

STATE OF ILLINOIS
DEPARTMENT OF TRANSPORTATION

SN 097-0023 EXISTING STRUCTURE PLANS
FOR INFORMATION ONLY

SCALE: AS SHOWN | SHEET NO. 7 OF 7 SHEETS | STA. | TO STA.

F.A.P. RTE.	SECTION	COUNTY	TOTAL SHEETS	SHEET NO.
328	105B-3	WHITE	71	65

CONTRACT NO. 78833
ILLINOIS FED. AID PROJECT

MODEL: PLOT
FILE NAME: Y:\IDOT\1359-13_78833\CADD\Highway\CADD Sheets\0978833-sht-rm107.dgn

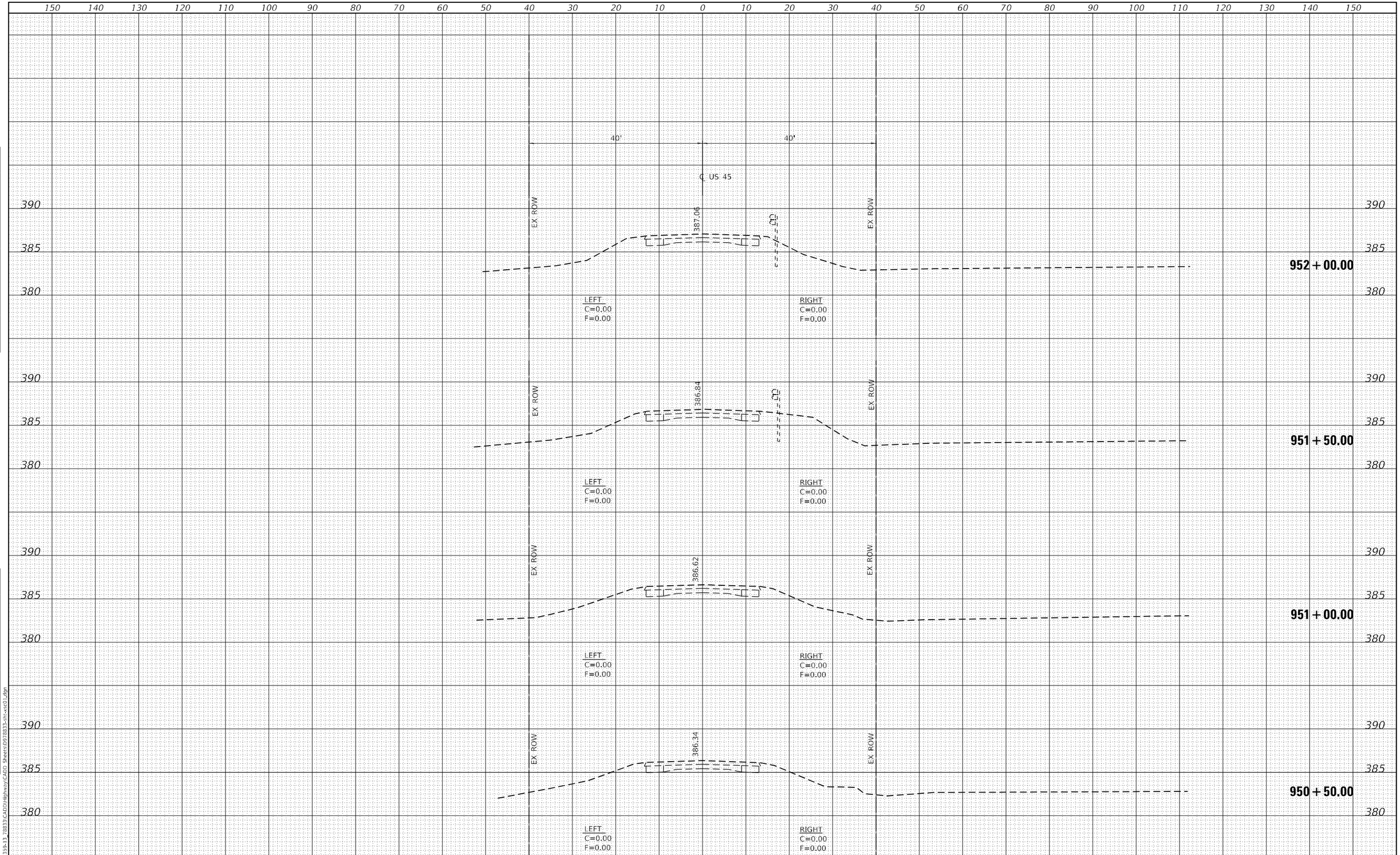

FINAL SURVEY	BY	DATE
SURVEYED		
PLOTTED		
TEMPLATE		
AREAS		
AREAS CHECKED		
NOTE BOOK NO.		

ORIGINAL SURVEY	BY	DATE
SURVEYED		
PLOTTED		
TEMPLATE		
AREAS		
AREAS CHECKED		
NOTE BOOK NO.		

NODE: Default
FILE NAME: Y:\IDOT\1359-13_78833\CADD\Highway\CADD Sheets\D978833-tt-xsc01.dgn

ESCA CONSULTANTS, INC.
CIVIL & STRUCTURAL ENGINEERS

USER NAME = IRC	DESIGNED - ATN	REVISED -	
ESCA PROJECT NO. 1359.13	DRAWN - JPC/ATN	REVISED -	
PLOT SCALE = 20.0000 ' / in.	CHECKED - ELH	REVISED -	
PLOT DATE = 8/9/2024	DATE - 04/24	REVISED -	

STATE OF ILLINOIS
DEPARTMENT OF TRANSPORTATION

US 45 CROSS SECTIONS

SCALE: AS SHOWN | SHEET NO. 1 OF 6 SHEETS | STA. 950+50.00 TO STA. 952+00.00

F.A.P. RTE.	SECTION	COUNTY	TOTAL SHEETS	SHEET NO.
328	105B-3	WHITE	71	66

CONTRACT NO. 78833

ILLINOIS | FED. AID PROJECT

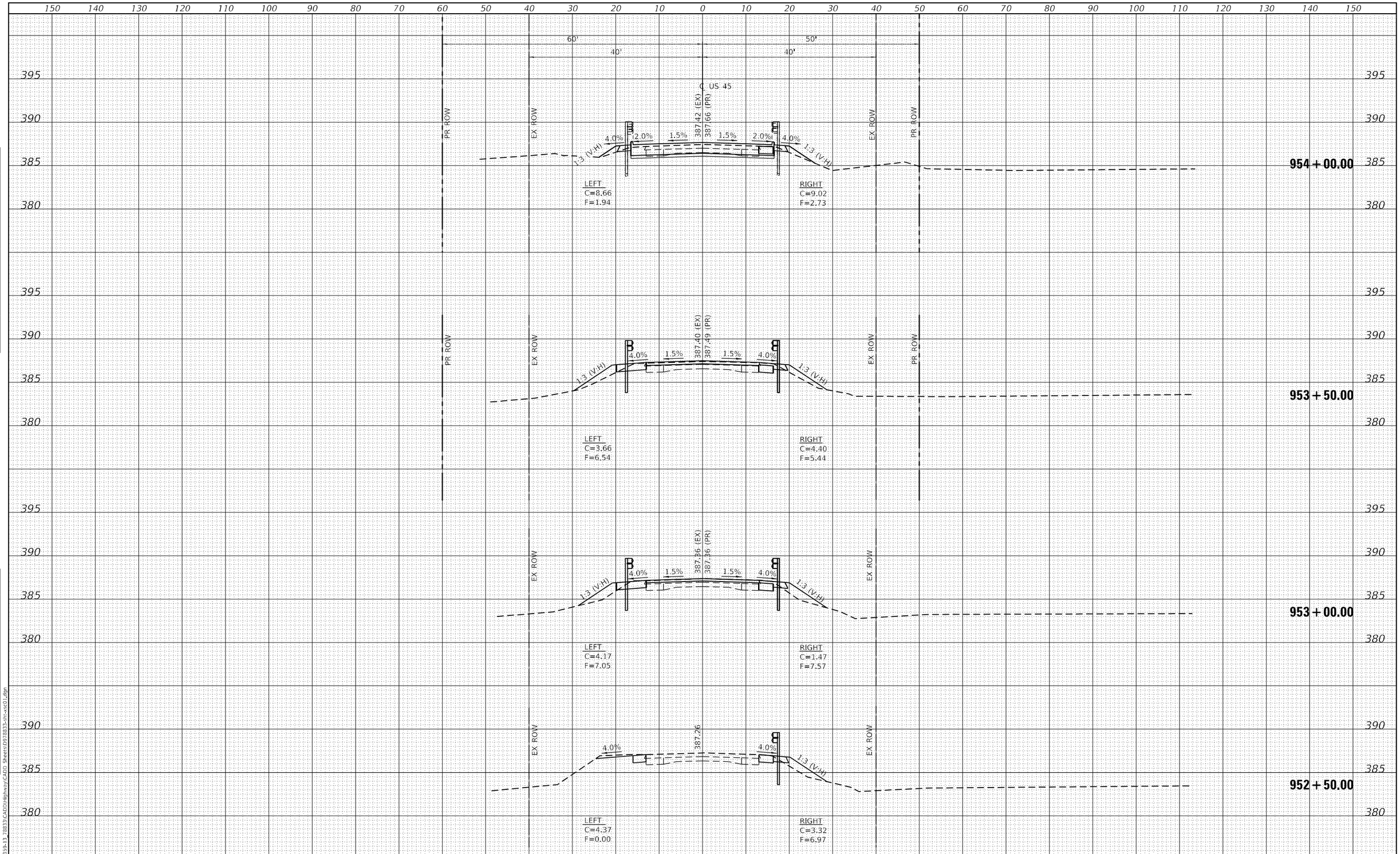

FINAL SURVEY		BY	DATE
NOTE BOOK	SURVEYED		
	PLOTTED		
	TEMPLATE		
	AREAS		
NO.	AREAS CHECKED		

ORIGINAL SURVEY		BY	DATE
NOTE BOOK	SURVEYED		
	PLOTTED		
	TEMPLATE		
	AREAS		
NO.	AREAS CHECKED		

MODEL: Default
FILE NAME: Y:\IDOT\1359-13_78833\CADD\Highway\CADD Sheets\D978833-sht-xsc01.dgn

ESCA CONSULTANTS, INC.
CIVIL & STRUCTURAL ENGINEERS

USER NAME = IRC	DESIGNED - ATN	REVISED -	
ESCA PROJECT NO. 1359.13	DRAWN - JPC/ATN	REVISED -	
PLOT SCALE = 20.0000 ' / in.	CHECKED - ELH	REVISED -	
PLOT DATE = 8/9/2024	DATE - 04/24	REVISED -	

STATE OF ILLINOIS
DEPARTMENT OF TRANSPORTATION

US 45 CROSS SECTIONS

SCALE: AS SHOWN | SHEET NO. 2 OF 6 SHEETS | STA. 952+50.00 TO STA. 954+00.00

F.A.P. RTE.	SECTION	COUNTY	TOTAL SHEETS	SHEET NO.
328	105B-3	WHITE	71	67

CONTRACT NO. 78833

ILLINOIS | FED. AID PROJECT

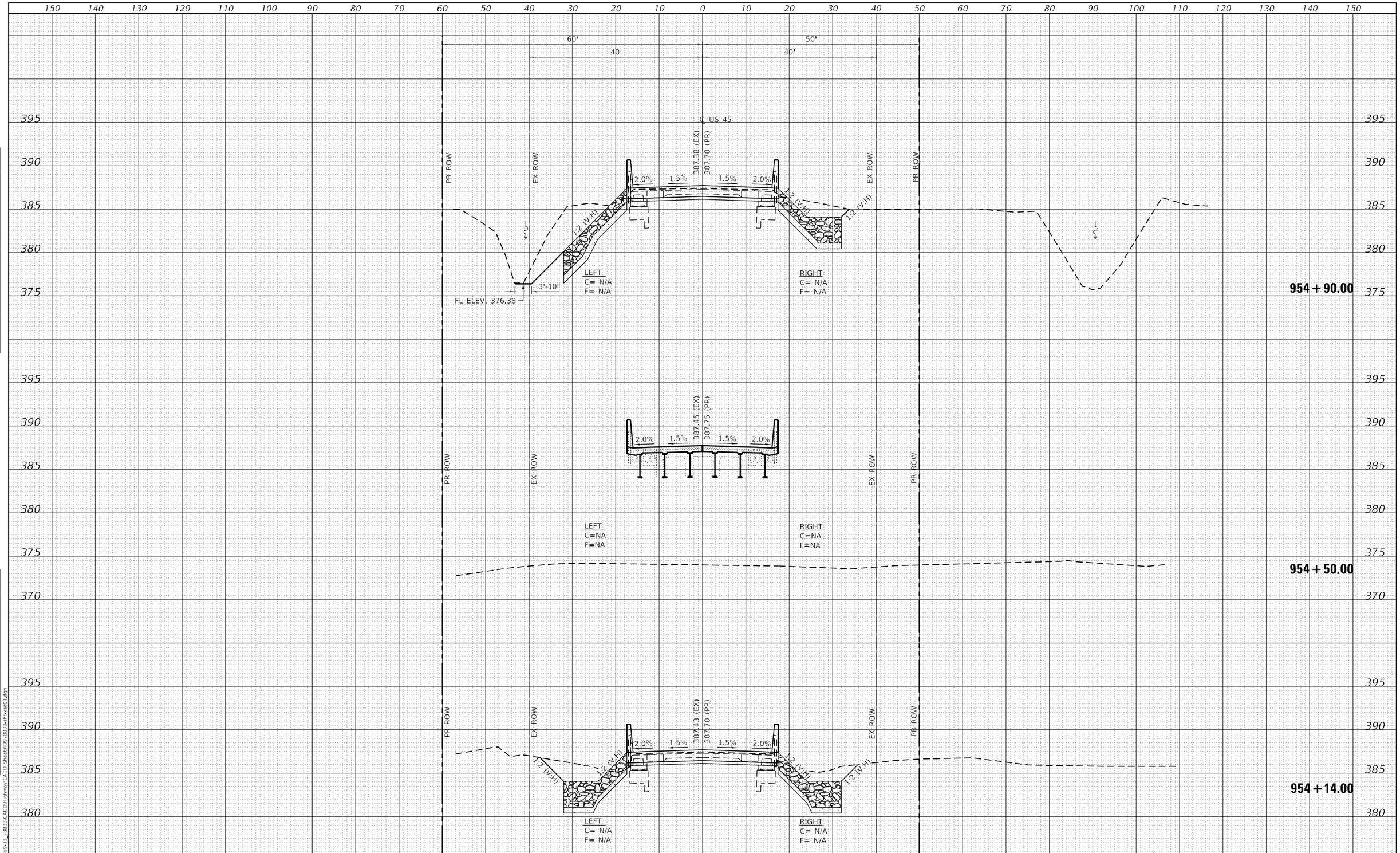

FINAL SURVEY	BY	DATE
SURVEYED		
PLOTTED		
TEMPLATE		
AREAS		
AREAS CHECKED		
NOTE BOOK		
NO.		

ORIGINAL SURVEY	BY	DATE
SURVEYED		
PLOTTED		
TEMPLATE		
AREAS		
AREAS CHECKED		
NOTE BOOK		
NO.		

MODEL: Default
FILE NAME: Y:\DOT\1359-13_78833\CAD\Highway\CADD Sheets\D978833-sht-xsc01.dgn

ESCA CONSULTANTS, INC.
CIVIL • STRUCTURAL • ENVIRONMENTAL

USER NAME = IRC	DESIGNED - ATN	REVISED -	
ESCA PROJECT NO. 1359.13	DRAWN - JPC/ATN	REVISED -	
PLOT SCALE = 20.0000 ' / in.	CHECKED - ELH	REVISED -	
PLOT DATE = 8/9/2024	DATE - 08/24	REVISED -	

STATE OF ILLINOIS
DEPARTMENT OF TRANSPORTATION

US 45 CROSS SECTIONS

SCALE: AS SHOWN | SHEET NO. 3 OF 6 SHEETS | STA. 954+14.00 TO STA. 954+90.00

F.A.P. RTE.	SECTION	COUNTY	TOTAL SHEETS	SHEET NO.
328	105B-3	WHITE	71	68

CONTRACT NO. 78833

ILLINOIS | FED. AID PROJECT

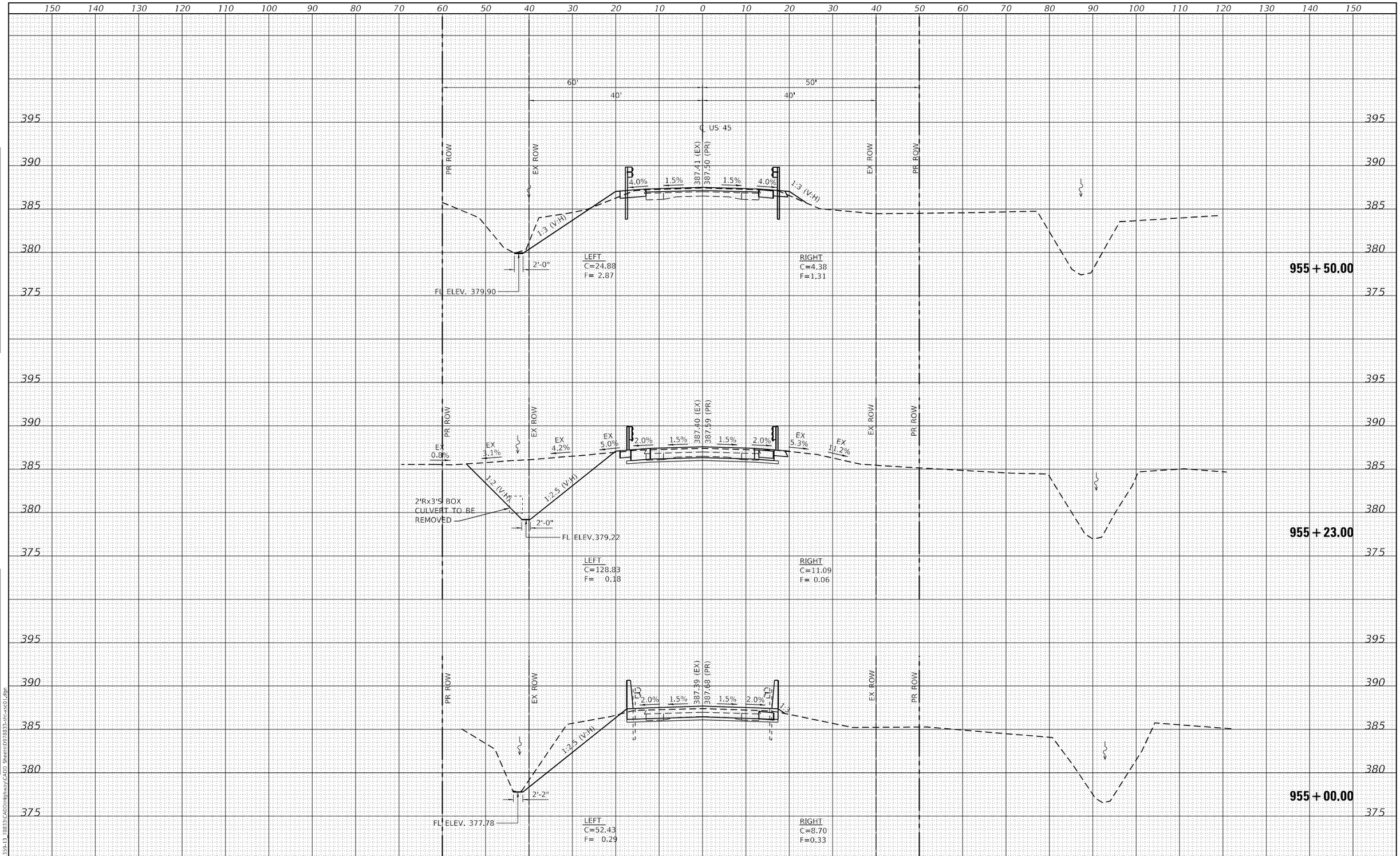

FINAL SURVEY		BY	DATE
SURVEYED			
PLOTTED			
TEMPLATE			
AREAS			
AREAS CHECKED			
NOTE BOOK			
NO.			

ORIGINAL SURVEY		BY	DATE
SURVEYED			
PLOTTED			
TEMPLATE			
AREAS			
AREAS CHECKED			
NOTE BOOK			
NO.			

MODEL: Default
FILE NAME: Y:\IDOT\1359-13_78833\CADD\Highway\CADD_Sheets\0978833-sht-xxs01.dgn

ESCA CONSULTANTS, INC.
CIVIL • STRUCTURAL • ENVIRONMENTAL

USER NAME = IRC	DESIGNED - ATN	REVISED -
ESCA PROJECT NO. 1359.13	DRAWN - JPC/ATN	REVISED -
PLOT SCALE = 20.0000 ' / in.	CHECKED - ELH	REVISED -
PLOT DATE = 8/9/2024	DATE - 04/24	REVISED -

STATE OF ILLINOIS
DEPARTMENT OF TRANSPORTATION

US 45 CROSS SECTIONS

SCALE: AS SHOWN | SHEET NO. 4 OF 6 SHEETS | STA. 955+00.00 TO STA. 955+50.00

F.A.P. RTE.	SECTION	COUNTY	TOTAL SHEETS	SHEET NO.
328	105B-3	WHITE	71	69

CONTRACT NO. 78833

ILLINOIS | FED. AID PROJECT

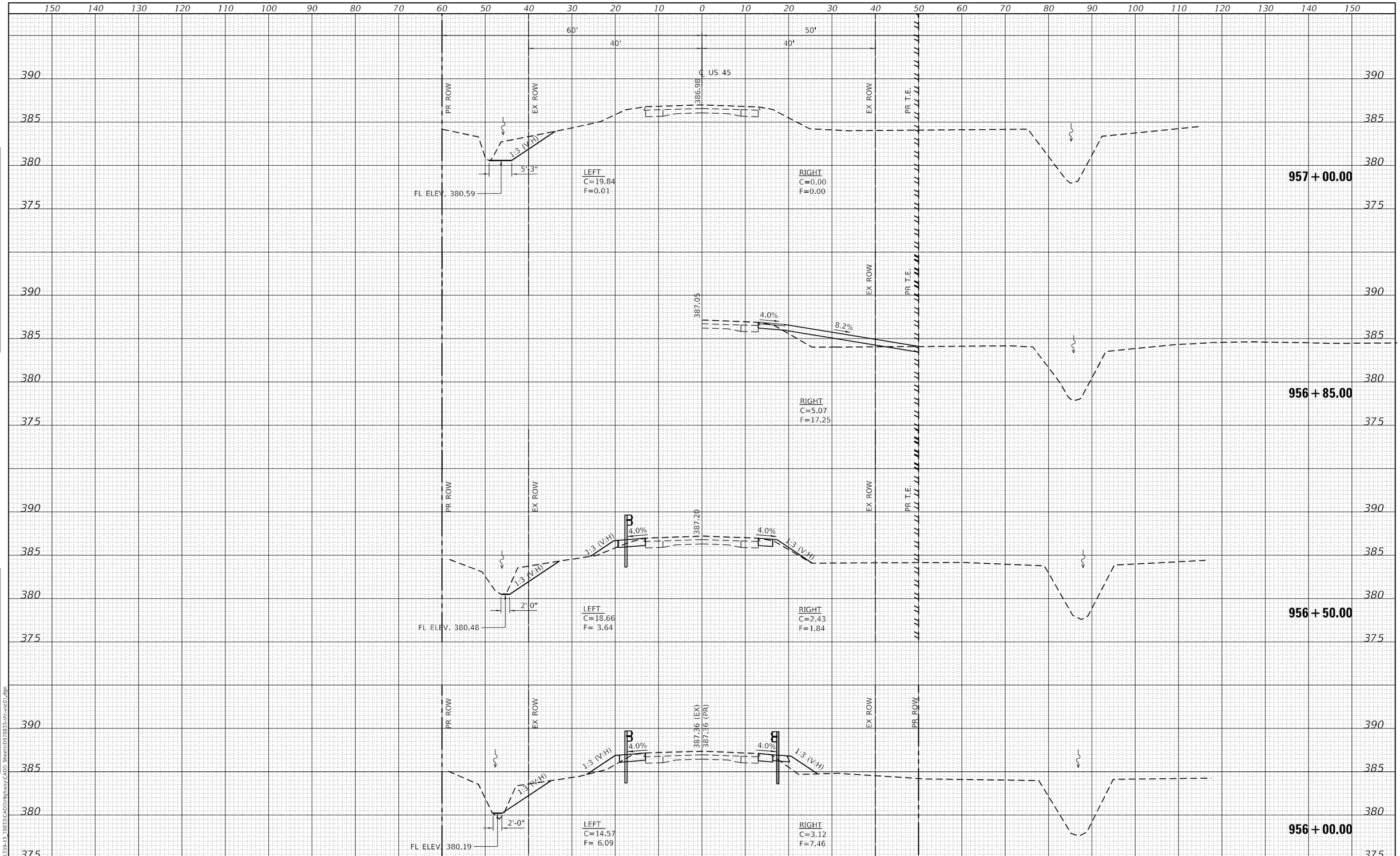

FINAL SURVEY		BY	DATE
NOTE BOOK	SURVEYED		
	PLOTTED		
	TEMPLATE		
	AREAS		
	AREAS CHECKED		
NO.			

ORIGINAL SURVEY		BY	DATE
NOTE BOOK	SURVEYED		
	PLOTTED		
	TEMPLATE		
	AREAS		
	AREAS CHECKED		
NO.			

MODEL: Default
FILE NAME: Y:\DOT\1359-13_78833\CAD\Highway\CADD Sheets\D978833-sht-xsc01.dgn

ESCA CONSULTANTS, INC.
CIVIL & STRUCTURAL ENGINEERS

USER NAME = IRC	DESIGNED - ATN/IRC	REVISED -	
ESCA PROJECT NO. 1359.13	DRAWN - JPC/ATN/IRC	REVISED -	
PLOT SCALE = 20.0000 ' / in.	CHECKED - ELH	REVISED -	
PLOT DATE = 8/16/2024	DATE - 04/24	REVISED -	

STATE OF ILLINOIS
DEPARTMENT OF TRANSPORTATION

US 45 CROSS SECTIONS

SCALE: AS SHOWN | SHEET NO. 5 OF 6 SHEETS | STA. 956+00.00 TO STA. 957+00.00

F.A.P. RTE.	SECTION	COUNTY	TOTAL SHEETS	SHEET NO.
328	105B-3	WHITE	71	70

CONTRACT NO. 78833

ILLINOIS | FED. AID PROJECT

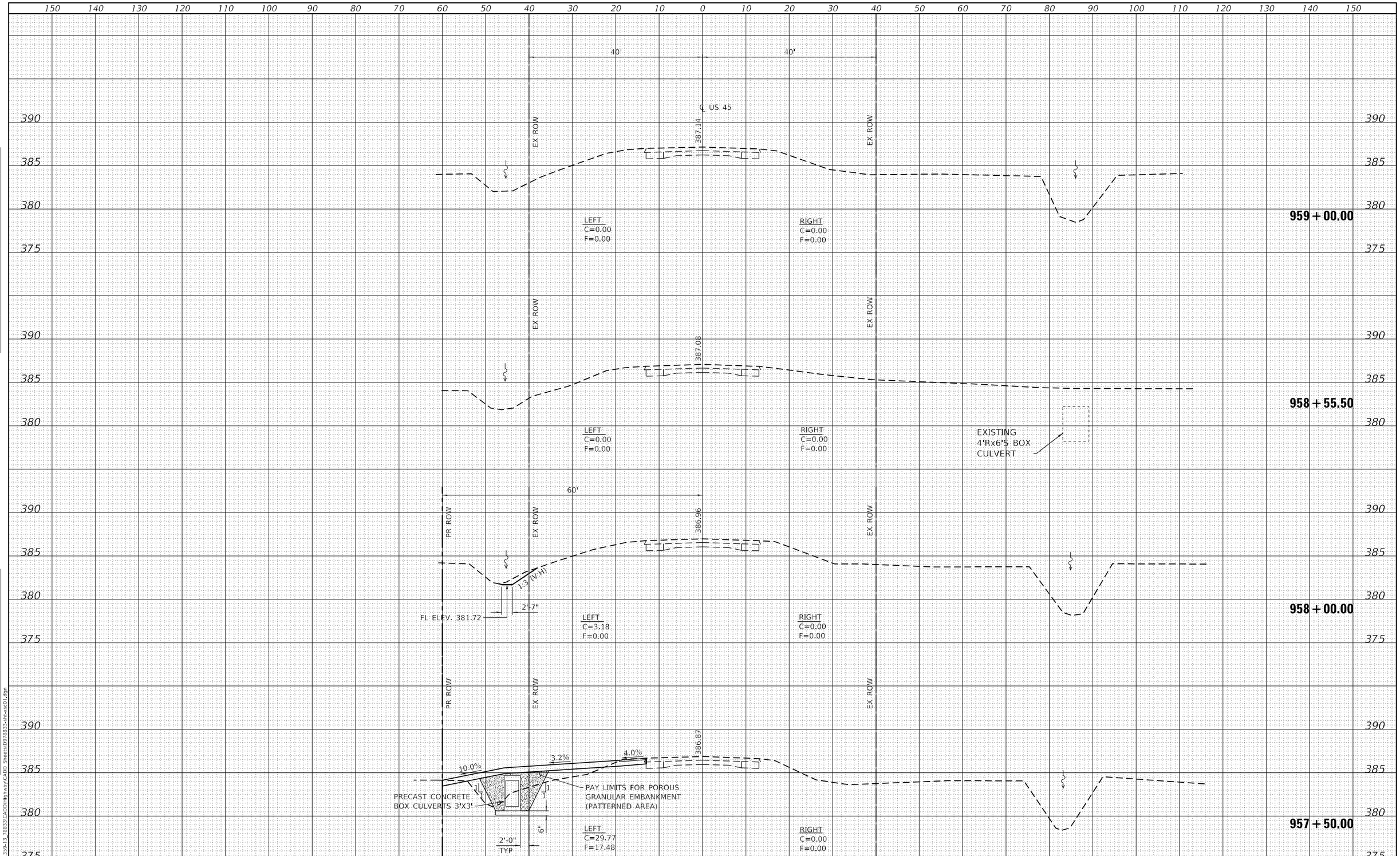

FINAL SURVEY	BY	DATE
SURVEYED		
PLOTTED		
TEMPLATE		
AREAS		
AREAS CHECKED		
NOTE BOOK		
NO.		

ORIGINAL SURVEY	BY	DATE
SURVEYED		
PLOTTED		
TEMPLATE		
AREAS		
AREAS CHECKED		
NOTE BOOK		
NO.		

MODEL: Default
FILE NAME: Y:\IDOT\1359-13_78833\CADD\Highway\CADD Sheets\D78833-sht-xsc01.dgn

ESCA CONSULTANTS, INC.
CIVIL & STRUCTURAL ENGINEERS

USER NAME = IRC	DESIGNED - ATN/IRC	REVISED -	
ESCA PROJECT NO. 1359.13	DRAWN - JPC/ATN/IRC	REVISED -	
PLOT SCALE = 20.0000 ' / in.	CHECKED - ELH	REVISED -	
PLOT DATE = 8/9/2024	DATE - 04/24	REVISED -	

STATE OF ILLINOIS
DEPARTMENT OF TRANSPORTATION

US 45 CROSS SECTIONS

SCALE: AS SHOWN | SHEET NO. 6 OF 6 SHEETS | STA. 957+50.00 TO STA. 959+00.00

F.A.P. RTE.	SECTION	COUNTY	TOTAL SHEETS	SHEET NO.
328	105B-3	WHITE	71	71

CONTRACT NO. 78833

ILLINOIS | FED. AID PROJECT