F.A.P. RTE.	SECTION	COUNTY	TOTAL SHEETS	SHEET NO.
804	25RS-6	CHAMPAIGN	306	1
		ILLINOIS	CONTRACT NO. 70991	

STATE OF ILLINOIS
DEPARTMENT OF TRANSPORTATION

04-25-2025 LETTING ITEM 094

FOR INDEX OF SHEETS, SEE SHEET NO. 3
FOR SUMMARY OF QUANTITIES, SEE SHEET NO. 5 – 17

PROPOSED HIGHWAY PLANS

FAP ROUTE 804 / (US 45)
SECTION 25RS–6
PROJECT NHPP–H89S(430)
STANDARD OVERLAY /ADA IMPROVEMENTS / TRAFFIC SIGNAL MODERNIZATION
CHAMPAIGN COUNTY

C–95–032–16

SPRINGFIELD AVENUE IN CHAMPAIGN TO CURTIS ROAD IN SAVOY

N

P-95-025-21

LOCATION OF SECTION INDICATED THUS:–

CURRENT TRAFFIC DATA

FAP RTE. 804 / (US 45)

		ADT (2024)	PV %	SU %	MU %
LEG "A"	=	19,100	97.5	2.0	0.5
LEG "B"	=	20,700	97.4	1.8	0.8
LEG "C"	=	22,100	96.9	1.9	1.2
LEG "D"	=	20,900	97.1	2.0	0.9
LEG "E"	=	23,300	96.9	2.1	1.0

TRAFFIC DATA LOCATIONS

LEG "A" = SPRINGFIELD AVENUE TO GREEN STREET
LEG "B" = GREEN STREET TO STADIUM DRIVE
LEG "C" = STADIUM DRIVE TO KIRBY AVENUE
LEG "D" = KIRBY AVENUE TO WINDSOR ROAD
LEG "E" = WINDSOR ROAD TO CURTIS ROAD

FUNCTIONAL CLASSIFICATION

OTHER PRINCIPAL ARTERIAL (URBAN)

DESIGN DESIGNATION
N/A

TOWNSHIP: CHAMPAIGN, CHAMPAIGN CITY

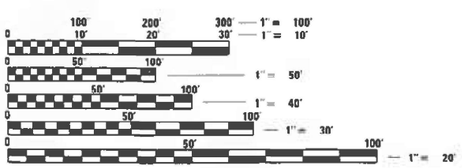

FULL SIZE PLANS HAVE BEEN PREPARED USING STANDARD ENGINEERING SCALES. REDUCED SIZED PLANS WILL NOT CONFORM TO STANDARD SCALES. IN MAKING MEASUREMENTS ON REDUCED PLANS, THE ABOVE SCALES MAY BE USED.

J.U.L.I.E.
JOINT UTILITY LOCATION INFORMATION FOR EXCAVATORS
1–800–892–0123
OR 811

FOR LOCATION MAP, SEE SHEET 2

STATE OF ILLINOIS
DEPARTMENT OF TRANSPORTATION

SUBMITTED 7/23 20 24
Kenneth A. Garnett
REGIONAL ENGINEER

October 4, 2024
ENGINEER OF DESIGN AND ENVIRONMENT

October 4, 2024
DIRECTOR OF HIGHWAYS PROJECT IMPLEMENTATION

PROJECT ENGINEER: JASON STULTS
SQUAD LEADER: GREG EAGLIN
PHONE: (217) 465–4181

GROSS LENGTH = 16042.51 FT. = 3.038 MILE
NET LENGTH = 16042.51 FT. = 3.038 MILE

CONTRACT NO. 70991

PRINTED BY THE AUTHORITY OF THE STATE OF ILLINOIS

DETAILED LOCATION MAP
FAP 804 /(US 45)

CURRENT TRAFFIC DATA

CURRENT TRAFFIC DATA

FAP RTE. 804 / (US 45)

		ADT (2024)	PV %	SU %	MU %
LEG "A"	=	19,100	97.5	2.0	0.5
LEG "B"	=	20,700	97.4	1.8	0.8
LEG "C"	=	22,100	96.9	1.9	1.2
LEG "D"	=	20,900	97.1	2.0	0.9
LEG "E"	=	23,300	96.9	2.1	1.0

TRAFFIC DATA LOCATIONS

LEG "A" = SPRINGFIELD AVENUE TO GREEN STREET
LEG "B" = GREEN STREET TO STADIUM DRIVE
LEG "C" = STADIUM DRIVE TO KIRBY AVENUE
LEG "D" = KIRBY AVENUE TO WINDSOR ROAD
LEG "E" = WINDSOR ROAD TO CURTIS ROAD

FUNCTIONAL CLASSIFICATION

OTHER PRINCIPAL ARTERIAL (URBAN)

TOWNSHIP: CHAMPAIGN, CHAMPAIGN CITY

NOTES:
ON THIS PROJECT THE STATIONING GOES IN 2 DIFFERENT DIRECTIONS. THE STATIONING DECREASES FROM STA. 134+98.00 TO STA. 13+30.18 (BK) AND THE STATIONING INCREASES FROM STA. 0+00.00 (AH) TO STA. 49+00.00.

FOR CLARITY, ALL THE PLAN SHEET INFORMATION AND SCHEDULES HAVE BEEN SET-UP GOING FROM SOUTH TO NORTH. THE WEST SIDE OF US 45 IS CALLED LEFT AND THE EAST SIDE OF US 45 IS CALLED RIGHT.

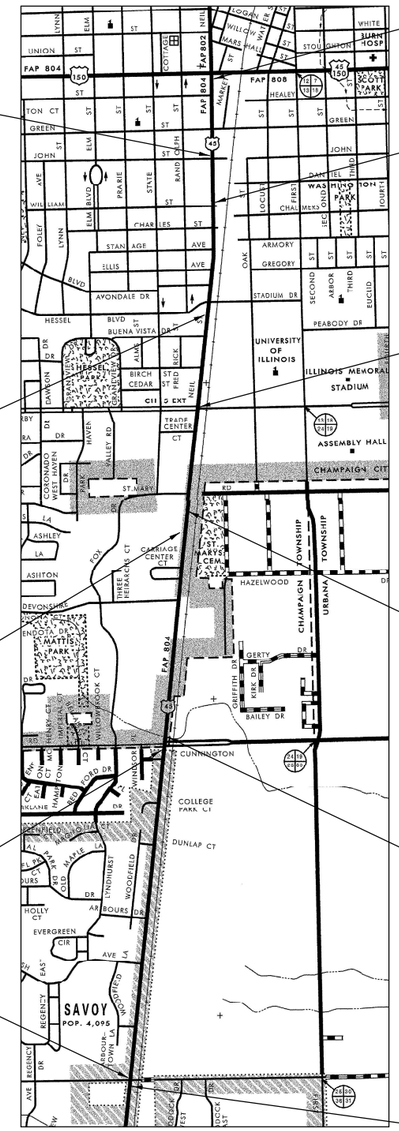

STA. EQUATION:
STA. 26+81.14 (BK)=
STA. 37+10.00 (AH)

STA. EQUATION:
STA. 20+33.42 (BK)=
STA. 20+31.70 (AH)

OFFSET CENTERLINE:
STA. 26+68.23 (PI)=
STA. 26+66.47 (POT1)

STA. EQUATION &
DIRECTION CHANGE
STA. 13+30.18 (BK)=
STA. 0+00.00 (AH)

STA. EQUATION:
STA. 47+11.85 (BK)=
STA. 47+12.48 AH

STA. EQUATION:
STA. 43+44.72 (BK)=
STA. 43+44.41 (AH)

S.N. 010-2021
STA. 78+75.00

STA. EQUATION:
STA. 81+35.26 (BK)=
STA. 81+35.00 (AH)

STA. EQUATION:
STA. 133+35.53 (BK)=
STA. 133+35.40 (AH)

SECTION: 25RS-6
ENDS: STA. 49+00.00

SECTION: 25RS-6
BEGINS: STA. 134+98.00

N

SCALE
0 1200 2400 3600 4800 6000 FEET
0 .1 .2 .3 .4 .5 .6 .7 .8 .9 1.0 MILE

TOTAL LENGTH OF SECTION AND PROJECT = 16,042.51 FT = 3.038 MILES
NET LENGTH OF SECTION AND PROJECT = 16,042.51 FT. = 3.038 MILES

USER NAME = Greg.Eaglin	DESIGNED -	REVISED -	
	DRAWN -	REVISED -	
PLOT SCALE = 40.0000 ' / in.	CHECKED -	REVISED -	
PLOT DATE = 6/26/2024	DATE -	REVISED -	

STATE OF ILLINOIS
DEPARTMENT OF TRANSPORTATION

DETAILED LOCATION MAP

SCALE: SHEET 1 OF 1 SHEETS STA. TO STA.

F.A.P. RTE.	SECTION	COUNTY	TOTAL SHEETS	SHEET NO.
804	25RS-6	CHAMPAIGN	306	2
		CONTRACT NO. 70991		
		ILLINOIS FED. AID PROJECT		

MODEL: SINGLE NAMES
FILE NAME: pw:\\ildot-pw.bentley.com:PWIDOT\Documents\IDOT Offices\District 5\Projects\D57099\CADData\CADsheets\D57099-sht-Det_Loc_Map.dgn

INDEX OF SHEETS

LIST OF HIGHWAY STANDARDS

STANDARD NO.	NAME OF STANDARD
000001-08	STANDARD SYMBOLS, ABBREVIATIONS AND PATTERNS
001006	DECIMAL OF AN INCH AND OF A FOOT
424001-12	PERPENDICULAR CURB RAMPS FOR SIDEWALKS
424006-06	DIAGONAL CURB RAMPS FOR SIDEWALKS
424011-05	CORNER PARALLEL CURB RAMPS FOR SIDEWALKS
424021-07	DEPRESSED CORNER FOR SIDEWALKS
424031-03	MEDIAN PEDESTRIAN CROSSING
442201-03	CLASS C AND D PATCHES
482011-03	HMA SHOULDER STRIPS/SHOULDERS WITH RESURFACING OR WIDENING AND RESURFACING PROJECTS
602301-04	INLET, TYPE A
604051-04	FRAME AND GRATE, TYPE 11
606001-08	CONCRETE CURB TYPE B AND COMBINATION CONCRETE CURB AND GUTTER
606301-04	PC CONCRETE ISLANDS AND MEDIANS
701101-05	OFF-ROAD OPERATIONS, MULTILANE, 15' TO 24" FROM PAVEMENT EDGE
701106-02	OFF-ROAD OPERATIONS, MULTILANE, MORE THAN 15' AWAY
701426-09	LANE CLOSURE, MULTILANE, INTERMITTENT OR MOVING OPERATIONS, FOR SPEEDS ≥ 45 MPH
701427-05	LANE CLOSURE, MULTILANE, INTERMITTENT OR MOVING OPERATIONS, FOR SPEEDS ≤ 40 MPH
701602-10	URBAN LANE CLOSURE, MULTILANE, 2W WITH BIDIRECTIONAL LEFT TURN LANE
701701-10	URBAN LANE CLOSURE, MULTILANE INTERSECTION
701801-06	SIDEWALK, CORNER OR CROSSWALK CLOSURE
701901-10	TRAFFIC CONTROL DEVICES
720016-04	MAST ARM MOUNTED STREET SIGNS
780001-05	TYPICAL PAVEMENT MARKINGS
781001-04	TYPICAL APPLICATIONS RAISED REFLECTIVE PAVEMENT MARKERS
814001-03	HANDHOLES
814006-03	DOUBLE HANDHOLES
821101-03	LUMINAIRE WIRING IN POLE
836001-05	LIGHT POLE FOUNDATION
857001-01	STANDARD PHASE DESIGNATION DIAGRAMS AND PHASE SEQUENCES
862001-01	UNINTERRUPTABLE POWER SUPPLY (UPS)
873001-02	TRAFFIC SIGNAL GROUNDING & BONDING
876001-04	PEDESTRIAN PUSH BUTTON POST
877001-08	STEEL MAST ARM ASSEMBLY AND POLE 16' THROUGH 55'
877011-10	STEEL COMBINATION MAST ARM ASSEMBLY AND POLE 16' THROUGH 55'
877012-07	STEEL COMBINATION MAST ARM ASSEMBLY AND POLE 56' THROUGH 75'
878001-11	CONCRETE FOUNDATION DETAILS
880006-01	TRAFFIC SIGNAL MOUNTING DETAILS
886001-01	DETECTOR LOOP INSTALLATIONS
886006-01	TYPICAL LAYOUT FOR DETECTION LOOPS

GENERAL NOTES

G.N.-100B
MICROSTATION AND GOEPAK FILES OF THIS PROJECT WILL BE MADE AVAILABLE TO THE CONTRACTOR AFTER CONTRACT AWARD. IF THERE IS CONFLICT BETWEEN THE ELECTRONIC FILES AND THE PRINTED CONTRACT PLANS AND DOCUMENTS, THE PRINTED CONTRACT PLANS AND DOCUMENTS SHALL TAKE PRECEDENCE OVER THE ELECTRONIC FILES. THE CONTRACTOR SHALL ACCEPT ALL RISK ASSOCIATED WITH USING THE ELECTRONIC FILES AND SHALL HOLD THE DEPARTMENT HARMLESS FOR ANY ERRORS OR OMISSIONS IN THE ELECTRONIC FILES AND THE DATA CONTAINED THEREIN. ERRORS OR DELAYS RESULTING FROM THE USE OF THE ELECTRONIC FILES BY THE CONTRACTOR SHALL NOT RESULT IN AN EXTENSION OF TIME FOR ANY INTERIM OR FINAL COMPLETION DATE OR SHALL NOT BE CONSIDERED CAUSE FOR ADDITIONAL COMPENSATION. THE CONTRACTOR SHALL NOT USE, SHARE, OR DISTRIBUTE THESE ELECTRONIC FILES EXCEPT FOR THE PURPOSE OF CONSTRUCTING THIS CONTRACT. ANY CLAIMS BY THIRD PARTIES DUE TO USE OR ERRORS SHALL BE THE SOLE RESPONSIBILITY OF THE CONTRACTOR. THE CONTRACTOR SHALL INCLUDE THIS DISCLAIMER WITH THE TRANSFER OF THESE ELCTRONIC FILES TO ANY OTHER PARTIES AND SHALL INCLUDE APPROPRIATE LANGUAGE BINDING THEM TO SIMILAR RESPONSIBILITIES.

G.N.-105.09A
ALL ELEVATIONS SHOWN IN THE PLANS ARE BASED ON NORTH AMERICAN VERTICAL DATUM OF 1988. (NAVD 88)

G.N.-107.12
THE NAME, ADDRESS AND TELEPHONE NUMBER OF THE LOCAL RAILROAD CONTACT IS:

DIANE LEWIS
MANAGER, PUBLIC PROJECTS
CN RAILROAD
1006 E. 4TH STREET
WATERLOO, IA 50703
(319) 472-1031

SPECIAL ATTENTION IS CALLED TO ARTICLE 107.12 REGARDING RAILROAD FLAGGERS. THE NAME, ADDRESS AND TELEPHONE NUMBER OF THE RAILROAD FLAGGER CONTACT IS:

U.S. FLAGGING DESK
17641 SOUTH ASHLAND AVENUE
HOMEWOOD, ILLINOIS 60430
(682) 316-5097

SOME RAILROADS REQUIRE CONTRACTORS TO OBTAIN A RIGHT OF ENTRY PERMIT BEFORE ENTERING UPON RAILROAD RIGHT OF WAY. IT IS THE RESPONSIBILITY OF THE CONTRACTOR TO OBTAIN A RAILROAD RIGHT OF ENTRY PERMIT FROM THE RAILROAD IF REQUIRED BY THE RAILROAD(S).

G.N. - 406H
THE FOLLOWING MIXTURE REQUIREMENTS ARE APPLICABLE FOR THIS PROJECT:

LOCATION	US 45	US 45	US 45
MIXTURE USE	POLYMER SURFACE	POLYMER BINDER	SHOULDER SURFACE (TOP 1-1/2") & INCIDENTAL
AC/PG	SBS PG 70-22	SBS PG 70-22	PG 64-22
DESIGN AIR VOIDS	4.0% @ Ndes=90	4.0% @ Ndes=90	4.0% @ Ndes=50
MIX COMP(GRADATION)	IL 9.5	IL 9.5 FG	IL 9.5
FRICTION AGGREGATE	MIX "D"	N.A.	MIX "C"
MIXTURE WEIGHT	112	112	112
QUALITY MANAGEMENT PROGRAM	QCP	QCP	QC/QA
SUBLOT SIZE	1000	1000	3000
MATERIAL TRANSFER DEVICE (REQUIRED ?)	NO	NO	NO

LOCATION	US 45	US 45
MIXTURE USE	SHOULDER BINDER (BOTTOM 1-1/4")	PATCHING
AC/PG	PG 64-22	PG 64-22
DESIGN AIR VOIDS	4.0% @ Ndes=50	4.0% @ Ndes=90
MIX COMP(GRADATION)	IL 9.5 FG	IL 19.0
FRICTION AGGREGATE	N.A.	N.A.
MIXTURE WEIGHT	112	112
QUALITY MANAGEMENT PROGRAM	QC/QA	QC/QA
SUBLOT SIZE	3000	3000
MATERIAL TRANSFER DEVICE (REQUIRED ?)	NO	NO

G.N.-406M
MATERIAL TRANSFER DEVICE (MTD) INFORMATION

IF THE CONTRACTOR ELECTS TO USE A MATERIAL TRANSFER DEVICE (MTD), THEN THE FOLLOWING REQUIREMENTS WILL APPLY.

BASED ON STRUCTURAL ANALYSIS, THE FOLLOWING STRUCTURES CAN BE CROSSED WITH AN EMPTY MTD WITH THE FOLLOWING MAXIMUM GROSS WEIGHT RESTRICTIONS:

STRUCTURE NUMBER	WEIGHT RESTRICTION
S.N. 010-2021	40 TONS

IF THE SAME MTD IS USED THROUGHOUT THE ENTIRE CONTRACT, THEN IT MUST BE LIMITIED TO AN EMPTY GROSS WEIGHT OF 40 TONS OR LESS.

G.N. 406S
PROJECT POSTED SPEED LIMITS

THE FOLLOWING TABLE IS A LISTING OF POSTED SPEED LIMITS WITHIN THE PROJECT LIMITS. STATIONS ARE SHOWN GOING SOUTH TO NORTH.
THE ENGINEER SHALL FIELD VERIFY THESE LIMITS:

LOCATION	STATION	TO	STATION	POSTED SPEED LIMIT (MPH)
FAP 804 / (US 45)	134+98.00		79+00.00	45
FAP 804 / (US 45)	79+00.00		36+72.00	40
FAP 804 / (US 45)	36+72.00		49+00.00	35

G.N.-440B
THE EXISTING TIE BARS BETWEEN THE EXISTING PAVEMENT AND EXISTING MEDIANS, GUTTERS AND / OR COMBINATION CURB AND GUTTERS THAT ARE FOUND SUITABLE FOR REUSE SHALL BE CLEANED, STRAIGHTENED AND INCORPORATED INTO THE NEW CONSTRUCTION. ANY EXISTING TIE BARS THAT ARE FOUND UNSUITABLE TO BE INCORPORATED INTO THE PROPOSED CONSTRUCTION DUE TO EXCESSIVE RUSTING OR DISTRESS SHALL BE REMOVED FLUSH WITH THE FACE OF THE EXISTING CONCRETE AND DISPOSED OF OUTSIDE THE LIMITS OF THE RIGHT-OF-WAY IN ACCORDANCE WITH ARTICLE 202.03 OF THE STANDARD SPECIFICATIONS.

THIS WORK WILL NOT BE PAID FOR SEPARATELY BUT SHALL BE CONSIDERED INCLUDED IN THE VARIOUS REMOVAL PAY ITEMS AND NO ADDITIONAL COMPENSATION WILL BE ALLOWED.

G.N.-703A
SHORT TERM PAVEMENT MARKING SHALL BE APPLIED TO THE PAVEMENT AFTER ANY OF THE FOLLOWING: PAVEMENT MARKING REMOVAL, COLD MILLING AND/OR PLACING BITUMINOUS MATERIALS (TACK COAT), AND BINDER & SURFACE COURSES. SHORT TERM PAVEMENT MARKING PLACED ON THE SURFACE, SHALL COINCIDE WITH THE FINAL PAVEMENT STRIPING. SHORT TERM PAVEMENT MARKING PLACED PRIOR TO THE SURFACE SHALL COINCIDE WITH THE EXISTING PAVEMENT MARKINGS. USE 4 FEET PER 40 FEET (OR 10% PER STATION).

G.N. 781
THE FINAL PAVEMENT MARKINGS SHALL BE IN PLACE PRIOR TO PLACING THE RAISED REFLECTIVE PAVEMENT MARKERS.

COMMITMENTS

THERE ARE NO COMMITMENTS FOR THIS CONTRACT.

BENCHMARKS

T.S. 400
STA. 79+20.409, (LT. 60.897') / WEST SIDE OF NEIL ST.
BRASS TABLET IN CONCRETE STAMPED "CITY OF CHAMPAIGN".
HORIZONTAL & VERTICAL CONTROL MONUMENT NO. 66.
61.0 FT WEST OF THE CENTERLINE OF NEIL STREET AND
78.5 FT NORTH OF THE CENTERLINE OF WINDSOR ROAD.
ELEVATION: 722.335

T.S. 422
STA. 57+24.191, (RT. 35.327') / EAST SIDE OF NEIL ST.
BRASS TABLET IN CONCRETE STAMPED "CITY OF CHAMPAIGN".
HORIZONTAL & VERTICAL CONTROL MONUMENT NO. 83.
CENTERLINE OF DEVONSHIRE DRIVE EXTENDED EAST,
35.0 FT EAST OF THE CENTERLINE OF NEIL STREET.
ELEVATION: 737.758

SUMMARY OF QUANTITIES

LOCATION OF WORK:	FAP 804 (US 45) URBAN 4 LANE ROADWAY IMPROVEMENTS STA. 134+98.00 TO STA. 49+00.00	FAP 804/(US 45) URBAN 4 LANE TRAFFIC SIGNALS ARBOUR TOWNE STA. 123+44.00	FAP 804/(US 45) URBAN 4 LANE TRAFFIC SIGNALS BURWASH AVE. STA. 114+58.70	FAP 804/(US 45) URBAN 4 LANE TRAFFIC SIGNALS KNOLLWOOD DR. STA. 70+18.50	FAP 804/(US 45) URBAN 4 LANE TRAFFIC SIGNALS DEVONSHIRE DR. STA. 57+28.30	FAP 804/(US 45) URBAN 4 LANE TRAFFIC SIGNALS WINDSOR RD. FOX / ST MARY KIRBY AVE. HESSEL / STADIUM GREEN ST. STA. 80+03.60 STA. 40+03.40 STA. 26+66.47 STA. 3+42.00 STA. 41+18.60	FAP 804/(US 45) URBAN 4 LANE TRAFFIC SIGNALS PAINTING EQUIPMENT / VEHICLE PRE-EMPTION / LIGHTING / FIBER INTERCONNECT AT KIRBY AVE.	FAP 804/(US 45 URBAN 4 LANE TRAFFIC SIGNALS LIGHTING
COUNTY:	CHAMPAIGN	CHAMPAIGN	CHAMPAIGN	CHAMPAIGN	CHAMPAIGN	CHAMPAIGN	CHAMPAIGN	CHAMPAIGN
FUNDING BREAKOUT:	80% FED 20% STATE	80% FED 20% VILLAGE OF SAVOY	80% FED 13.3% STATE 6.7% VILLAGE OF SAVOY	80% FED 20% CITY OF CHAMPAIGN	80% FED 13.3% STATE 6.7% CITY OF CHAMPAIGN	80% FED 10% STATE 10% CITY OF CHAMPAIGN	100% CITY OF CHAMPAIGN	100% VILLAGE OF SAVOY
CONSTRUCTION CODE:	0005	0021	0021	0021	0021	0021	0021	0021

CODE NO	ITEM	UNIT	TOTAL QUANTITY	QUANTITY	QUANTITY	QUANTITY	QUANTITY	QUANTITY	QUANTITY	QUANTITY	QUANTITY
20200100	EARTH EXCAVATION	CU YD	195.0	195.0							
20400800	FURNISHED EXCAVATION	CU YD	72.0	72.0							
20800150	TRENCH BACKFILL	CU YD	4.0	4.0							
25000310	SEEDING, CLASS 4	ACRE	0.25	0.25							
25000322	SEEDING, CLASS 5A	ACRE	0.25	0.25							
25000400	NITROGEN FERTILIZER NUTRIENT	POUND	36.0	36.0							
25000500	PHOSPHORUS FERTILIZER NUTRIENT	POUND	36.0	36.0							
25000600	POTASSIUM FERTILIZER NUTRIENT	POUND	36.0	36.0							
25100115	MULCH, METHOD 2	ACRE	0.25	0.25							
25200110	SODDING, SALT TOLERANT	SQ YD	2,034.0	2,034.0							
25200200	SUPPLEMENTAL WATERING	UNIT	25.0	25.0							
28000250	TEMPORARY EROSION CONTROL SEEDING	POUND	160.0	160.0							
35300700	PORTLAND CEMENT CONCRETE BASE COURSE 12"	SQ YD	82.0	82.0							
40600290	BITUMINOUS MATERIALS (TACK COAT)	POUND	89,306.0	89,306.0							

* SPECIALTY ITEM

MODEL: $MODELNAME$
FILE NAME: pw:\\ildot-pw.bentley.com:PWIDOT\Documents\IDOT Offices\District 5\Project\D57099\CADData\CADsheets\D570991-sht-SQ0.dgn

USER NAME = Greg.Eaglin	DESIGNED -	REVISED -	STATE OF ILLINOIS DEPARTMENT OF TRANSPORTATION
	DRAWN -	REVISED -	
PLOT SCALE = 40.0000 ' / in.	CHECKED -	REVISED -	
PLOT DATE = 7/2/2024	DATE -	REVISED -	

SUMMARY OF QUANTITIES

SCALE: SHEET 1 OF 13 SHEETS STA. TO STA.

F.A.P. RTE.	SECTION	COUNTY	TOTAL SHEETS	SHEET NO.
804	25RS-6	CHAMPAIGN	306	5
		CONTRACT NO. 70991		
		ILLINOIS FED. AID PROJECT		

SUMMARY OF QUANTITIES

			LOCATION OF WORK:	FAP 804 (US 45) URBAN 4 LANE ROADWAY IMPROVEMENTS STA. 134+98.00 TO STA. 49+00.00		FAP 804/(US 45) URBAN 4 LANE TRAFFIC SIGNALS ARBOUR TOWNE STA. 123+44.00		FAP 804/(US 45) URBAN 4 LANE TRAFFIC SIGNALS BURWASH AVE. STA. 114+58.70		FAP 804/(US 45) URBAN 4 LANE TRAFFIC SIGNALS KNOLLWOOD DR. STA. 70+18.50		FAP 804/(US 45) URBAN 4 LANE TRAFFIC SIGNALS DEVONSHIRE DR. STA. 57+28.30		FAP 804/(US 45) URBAN 4 LANE TRAFFIC SIGNALS WINDSOR RD. FOX / ST MARY KIRBY AVE. HESSEL / STADIUM GREEN ST. STA. 80+03.60 STA. 40+03.40 STA. 26+66.47 STA. 3+42.00 STA. 41+18.60		FAP 804/(US 45) URBAN 4 LANE TRAFFIC SIGNALS PAINTING EQUIPMENT / VEHICLE PRE-EMPTION / LIGHTING / FIBER INTERCONNECT AT KIRBY AVE.		FAP 804/(US 45 URBAN 4 LANE TRAFFIC SIGNALS LIGHTING	
			COUNTY:	CHAMPAIGN		CHAMPAIGN		CHAMPAIGN		CHAMPAIGN		CHAMPAIGN		CHAMPAIGN		CHAMPAIGN		CHAMPAIGN		CHAMPAIGN	
			FUNDING BREAKOUT:	80% FED 20% STATE		80% FED 20% VILLAGE OF SAVOY		80% FED 13.3% STATE 6.7% VILLAGE OF SAVOY		80% FED 20% CITY OF CHAMPAIGN		80% FED 13.3% STATE 6.7% CITY OF CHAMPAIGN		80% FED 10% STATE 10% CITY OF CHAMPAIGN		100% CITY OF CHAMPAIGN		100% VILLAGE OF SAVOY	
			CONSTRUCTION CODE:	0005		0021		0021		0021		0021		0021		0021		0021	
	CODE NO	ITEM	UNIT	TOTAL QUANTITY		QUANTITY		QUANTITY		QUANTITY		QUANTITY		QUANTITY		QUANTITY		QUANTITY	
	40600370	LONGITUDINAL JOINT SEALANT	FOOT	72,976.0		72,976.0													
	40600990	TEMPORARY RAMP	SQ YD	1,950.0		1,950.0													
	40603219	POLYMERIZED HOT-MIX ASPHALT BINDER COURSE, IL-9.5FG, N90	TON	8,288.0		8,288.0													
	40604164	POLYMERIZED HOT-MIX ASPHALT SURFACE COURSE, IL-9.5, MIX "D", N90	TON	9,945.0		9,945.0													
	40800029	BITUMINOUS MATERIALS (TACK COAT)	POUND	819.0		819.0													
	40800050	INCIDENTAL HOT-MIX ASPHALT SURFACING	TON	153.0		153.0													
	42300200	PORTLAND CEMENT CONCRETE DRIVEWAY PAVEMENT, 6 INCH	SQ YD	84.0		84.0													
	42400200	PORTLAND CEMENT CONCRETE SIDEWALK 5 INCH	SQ FT	14,820.0		14,820.0													
*	42400800	DETECTABLE WARNINGS	SQ FT	887.0		887.0													
	44000100	PAVEMENT REMOVAL	SQ YD	60.0		60.0													
	44000160	HOT-MIX ASPHALT SURFACE REMOVAL, 2 3/4"	SQ YD	128,250.0		128,250.0													
	44000200	DRIVEWAY PAVEMENT REMOVAL	SQ YD	86.0		86.0													
	44000500	COMBINATION CURB AND GUTTER REMOVAL	FOOT	1,948.0		1,948.0													
	44000600	SIDEWALK REMOVAL	SQ FT	14,337.0		14,337.0													

* SPECIALTY ITEM

MODEL: $MODELNAME$
FILE NAME: pw:\\ildot-pw.bentley.com:PWIDOT\Documents\IDOT Offices\District 5\Project\D57099\CADData\CADsheets\D57099-sht-SQO.dgn

USER NAME = Greg.Eaglin	DESIGNED -	REVISED -	STATE OF ILLINOIS DEPARTMENT OF TRANSPORTATION
	DRAWN -	REVISED -	
PLOT SCALE = 40.0000 ' / in.	CHECKED -	REVISED -	
PLOT DATE = 7/2/2024	DATE -	REVISED -	

SUMMARY OF QUANTITIES

SCALE: | SHEET 2 OF 13 SHEETS | STA. TO STA.

F.A.P. RTE.	SECTION	COUNTY	TOTAL SHEETS	SHEET NO.
804	25RS-6	CHAMPAIGN	306	6
		CONTRACT NO. 70991		
	ILLINOIS	FED. AID PROJECT		

SUMMARY OF QUANTITIES

				LOCATION OF WORK:	FAP 804 (US 45) URBAN 4 LANE ROADWAY IMPROVEMENTS STA. 134+98.00 TO STA. 49+00.00	FAP 804/(US 45) URBAN 4 LANE TRAFFIC SIGNALS ARBOUR TOWNE STA. 123+44.00	FAP 804/(US 45) URBAN 4 LANE TRAFFIC SIGNALS BURWASH AVE. STA. 114+58.70	FAP 804/(US 45) URBAN 4 LANE TRAFFIC SIGNALS KNOLLWOOD DR. STA. 70+18.50	FAP 804/(US 45) URBAN 4 LANE TRAFFIC SIGNALS DEVONSHIRE DR. STA. 57+28.30	FAP 804/(US 45) URBAN 4 LANE TRAFFIC SIGNALS WINDSOR RD. FOX / ST MARY KIRBY AVE. HESSEL / STADIUM GREEN ST. STA. 80+03.60 STA. 40+03.40 STA. 26+66.47 STA. 3+42.00 STA. 41+18.60	FAP 804/(US 45) URBAN 4 LANE TRAFFIC SIGNALS PAINTING EQUIPMENT / VEHICLE PRE-EMPTION / LIGHTING / FIBER INTERCONNECT AT KIRBY AVE.	FAP 804/(US 45 URBAN 4 LANE TRAFFIC SIGNALS LIGHTING
				COUNTY:	CHAMPAIGN	CHAMPAIGN	CHAMPAIGN	CHAMPAIGN	CHAMPAIGN	CHAMPAIGN	CHAMPAIGN	CHAMPAIGN
				FUNDING BREAKOUT:	80% FED 20% STATE	80% FED 20% VILLAGE OF SAVOY	80% FED 13.3% STATE 6.7% VILLAGE OF SAVOY	80% FED 20% CITY OF CHAMPAIGN	80% FED 13.3% STATE 6.7% CITY OF CHAMPAIGN	80% FED 10% STATE 10% CITY OF CHAMPAIGN	100% CITY OF CHAMPAIGN	100% VILLAGE OF SAVOY
				CONSTRUCTION CODE:	0005	0021	0021	0021	0021	0021	0021	0021
	CODE NO	ITEM	UNIT	TOTAL QUANTITY	QUANTITY	QUANTITY	QUANTITY	QUANTITY	QUANTITY	QUANTITY	QUANTITY	QUANTITY
	44201373	CLASS C PATCHES, TYPE I, 12 INCH	SQ YD	8.0	8.0							
	44201789	CLASS D PATCHES, TYPE II, 12 INCH	SQ YD	315.0	315.0							
	44201794	CLASS D PATCHES, TYPE III, 12 INCH	SQ YD	48.0	48.0							
	44201796	CLASS D PATCHES, TYPE IV, 12 INCH	SQ YD	1,530.0	1,530.0							
	44201827	CLASS D PATCHES, TYPE II, 15 INCH	SQ YD	37.0	37.0							
	44201831	CLASS D PATCHES, TYPE III, 15 INCH	SQ YD	52.0	52.0							
	44201833	CLASS D PATCHES, TYPE IV, 15 INCH	SQ YD	795.0	795.0							
	48102100	AGGREGATE WEDGE SHOULDER, TYPE B	TON	90.0	90.0							
	48203008	HOT-MIX ASPHALT SHOULDERS, 2 3/4"	SQ YD	9,861.0	9,861.0							
	54248510	CONCRETE COLLAR	CU YD	0.5	0.5							
	550A0050	STORM SEWERS, CLASS A, TYPE 1 12"	FOOT	12.0	12.0							
	56109210	WATER VALVES TO BE ADJUSTED	EACH	50.0	50.0							
	60236800	INLETS, TYPE A, TYPE 11 FRAME AND GRATE	EACH	2.0	2.0							
	60300105	FRAMES AND GRATES TO BE ADJUSTED	EACH	22.0	22.0							

* SPECIALTY ITEM

SUMMARY OF QUANTITIES

LOCATION OF WORK:		FAP 804 (US 45) URBAN 4 LANE ROADWAY IMPROVEMENTS STA. 134+98.00 TO STA. 49+00.00	FAP 804/(US 45) URBAN 4 LANE TRAFFIC SIGNALS ARBOUR TOWNE STA. 123+44.00	FAP 804/(US 45) URBAN 4 LANE TRAFFIC SIGNALS BURWASH AVE. STA. 114+58.70	FAP 804/(US 45) URBAN 4 LANE TRAFFIC SIGNALS KNOLLWOOD DR. STA. 70+18.50	FAP 804/(US 45) URBAN 4 LANE TRAFFIC SIGNALS DEVONSHIRE DR. STA. 57+28.30	FAP 804/(US 45) URBAN 4 LANE TRAFFIC SIGNALS WINDSOR RD. FOX / ST MARY KIRBY AVE. HESSEL / STADIUM GREEN ST. STA. 80+03.60 STA. 40+03.40 STA. 26+66.47 STA. 3+42.00 STA. 41+18.60	FAP 804/(US 45) URBAN 4 LANE TRAFFIC SIGNALS PAINTING EQUIPMENT / VEHICLE PRE-EMPTION / LIGHTING / FIBER INTERCONNECT AT KIRBY AVE.	FAP 804/(US 45 URBAN 4 LANE TRAFFIC SIGNALS LIGHTING
COUNTY:		CHAMPAIGN	CHAMPAIGN	CHAMPAIGN	CHAMPAIGN	CHAMPAIGN	CHAMPAIGN	CHAMPAIGN	CHAMPAIGN
FUNDING BREAKOUT:		80% FED 20% STATE	80% FED 20% VILLAGE OF SAVOY	80% FED 13.3% STATE 6.7% VILLAGE OF SAVOY	80% FED 20% CITY OF CHAMPAIGN	80% FED 13.3% STATE 6.7% CITY OF CHAMPAIGN	80% FED 10% STATE 10% CITY OF CHAMPAIGN	100% CITY OF CHAMPAIGN	100% VILLAGE OF SAVOY
CONSTRUCTION CODE:		0005	0021	0021	0021	0021	0021	0021	0021
CODE NO	ITEM	UNIT	TOTAL QUANTITY	QUANTITY	QUANTITY	QUANTITY	QUANTITY	QUANTITY	QUANTITY	QUANTITY	QUANTITY
60300305	FRAMES AND LIDS TO BE ADJUSTED	EACH	67.0	67.0							
60500090	REMOVING INLETS TO MAINTAIN FLOW	EACH	2.0	2.0							
60600605	CONCRETE CURB, TYPE B	FOOT	73.0	73.0							
60603800	COMBINATION CONCRETE CURB AND GUTTER, TYPE B-6.12	FOOT	1,143.0	1143.0							
60604400	COMBINATION CONCRETE CURB AND GUTTER, TYPE B-6.18	FOOT	120.0	120.0							
60605000	COMBINATION CONCRETE CURB AND GUTTER, TYPE B-6.24	FOOT	631.0	631.0							
* 66900200	NON-SPECIAL WASTE DISPOSAL	CU YD	301.0	301.0							
* 66900530	SOIL DISPOSAL ANALYSIS	EACH	25.0	25.0							
* 66901001	REGULATED SUBSTANCES PRE-CONSTRUCTION PLAN	L SUM	1.0	1.0							
* 66901003	REGULATED SUBSTANCES FINAL CONSTRUCTION REPORT	L SUM	1.0	1.0							
* 66901006	REGULATED SUBSTANCES MONITORING	CAL DA	90.0	90.0							
67000500	ENGINEER'S FIELD OFFICE, TYPE B	CAL MO	21.0	21.0							
67100100	MOBILIZATION	L SUM	1.0	1.0							
70102632	TRAFFIC CONTROL AND PROTECTION, STANDARD 701602	L SUM	1.0	1.0							

* SPECIALTY ITEM

SUMMARY OF QUANTITIES

				LOCATION OF WORK:	FAP 804 (US 45) URBAN 4 LANE ROADWAY IMPROVEMENTS STA. 134+98.00 TO STA. 49+00.00		FAP 804/(US 45) URBAN 4 LANE TRAFFIC SIGNALS ARBOUR TOWNE STA. 123+44.00		FAP 804/(US 45) URBAN 4 LANE TRAFFIC SIGNALS BURWASH AVE. STA. 114+58.70		FAP 804/(US 45) URBAN 4 LANE TRAFFIC SIGNALS KNOLLWOOD DR. STA. 70+18.50		FAP 804/(US 45) URBAN 4 LANE TRAFFIC SIGNALS DEVONSHIRE DR. STA. 57+28.30		FAP 804/(US 45) URBAN 4 LANE TRAFFIC SIGNALS WINDSOR RD. FOX / ST MARY KIRBY AVE. HESSEL / STADIUM GREEN ST. STA. 80+03.60 STA. 40+03.40 STA. 26+66.47 STA. 3+42.00 STA. 41+18.60		FAP 804/(US 45) URBAN 4 LANE TRAFFIC SIGNALS PAINTING EQUIPMENT / VEHICLE PRE-EMPTION / LIGHTING / FIBER INTERCONNECT AT KIRBY AVE.		FAP 804/(US 45 URBAN 4 LANE TRAFFIC SIGNALS LIGHTING	
				COUNTY:	CHAMPAIGN		CHAMPAIGN		CHAMPAIGN		CHAMPAIGN		CHAMPAIGN		CHAMPAIGN		CHAMPAIGN		CHAMPAIGN	
				FUNDING BREAKOUT:	80% FED 20% STATE		80% FED 20% VILLAGE OF SAVOY		80% FED 13.3% STATE 6.7% VILLAGE OF SAVOY		80% FED 20% CITY OF CHAMPAIGN		80% FED 13.3% STATE 6.7% CITY OF CHAMPAIGN		80% FED 10% STATE 10% CITY OF CHAMPAIGN		100% CITY OF CHAMPAIGN		100% VILLAGE OF SAVOY	
				CONSTRUCTION CODE:	0005		0021		0021		0021		0021		0021		0021		0021	
	CODE NO	ITEM	UNIT	TOTAL QUANTITY	QUANTITY		QUANTITY		QUANTITY		QUANTITY		QUANTITY		QUANTITY		QUANTITY		QUANTITY	
	70102635	TRAFFIC CONTROL AND PROTECTION, STANDARD 701701	L SUM	1.0	1.0															
	70102640	TRAFFIC CONTROL AND PROTECTION, STANDARD 701801	L SUM	1.0	1.0															
	70103815	TRAFFIC CONTROL SURVEILLANCE	CAL DA	60.0	60.0															
	70107025	CHANGEABLE MESSAGE SIGN	CAL DA	65.0	65.0															
	70200100	NIGHTTIME WORK ZONE LIGHTING	L SUM	1.0	1.0															
	70300100	SHORT TERM PAVEMENT MARKING	FOOT	66,669.0	66,669.0															
	70300150	SHORT TERM PAVEMENT MARKING REMOVAL	SQ FT	7,408.0	7,408.0															
	70300211	TEMPORARY PAVEMENT MARKING LETTERS AND SYMBOLS - PAINT	SQ FT	3,826.0	3,826.0															
	70300221	TEMPORARY PAVEMENT MARKING - LINE 4"- PAINT	FOOT	58,231.0	58,231.0															
	70300241	TEMPORARY PAVEMENT MARKING - LINE 6"- PAINT	FOOT	4,012.0	4,012.0															
	70300261	TEMPORARY PAVEMENT MARKING - LINE 12"- PAINT	FOOT	3,444.0	3,444.0															
	70300281	TEMPORARY PAVEMENT MARKING - LINE 24"- PAINT	FOOT	1,836.0	1,836.0															
*	78000100	THERMOPLASTIC PAVEMENT MARKING - LETTERS AND SYMBOLS	SQ FT	3,826.0	3,826.0															
*	78000200	THERMOPLASTIC PAVEMENT MARKING - LINE 4"	FOOT	58,231.0	58,231.0															

* SPECIALTY ITEM

MODEL: $MODELNAME$
FILE NAME: pw:\\ildot-pw.bentley.com:PWIDOT\Documents\IDOT Offices\District 5\Project\D57099\CADData\CADsheets\D57099-sht-SQO.dgn

USER NAME = Greg.Eaglin	DESIGNED -	REVISED -	STATE OF ILLINOIS DEPARTMENT OF TRANSPORTATION
	DRAWN -	REVISED -	
PLOT SCALE = 40.0000 ' / in.	CHECKED -	REVISED -	
PLOT DATE = 7/2/2024	DATE -	REVISED -	

SUMMARY OF QUANTITIES

SCALE: | SHEET 5 OF 13 SHEETS | STA. TO STA.

F.A.P. RTE.	SECTION	COUNTY	TOTAL SHEETS	SHEET NO.
804	25RS-6	CHAMPAIGN	306	9
		CONTRACT NO. 70991		
	ILLINOIS	FED. AID PROJECT		

SUMMARY OF QUANTITIES

			LOCATION OF WORK:		FAP 804 (US 45) URBAN 4 LANE ROADWAY IMPROVEMENTS STA. 134+98.00 TO STA. 49+00.00		FAP 804/(US 45) URBAN 4 LANE TRAFFIC SIGNALS ARBOUR TOWNE STA. 123+44.00		FAP 804/(US 45) URBAN 4 LANE TRAFFIC SIGNALS BURWASH AVE. STA. 114+58.70		FAP 804/(US 45) URBAN 4 LANE TRAFFIC SIGNALS KNOLLWOOD DR. STA. 70+18.50		FAP 804/(US 45) URBAN 4 LANE TRAFFIC SIGNALS DEVONSHIRE DR. STA. 57+28.30		FAP 804/(US 45) URBAN 4 LANE TRAFFIC SIGNALS WINDSOR RD. FOX / ST MARY KIRBY AVE. HESSEL / STADIUM GREEN ST. STA. 80+03.60 STA. 40+03.40 STA. 26+66.47 STA. 3+42.00 STA. 41+18.60		FAP 804/(US 45) URBAN 4 LANE TRAFFIC SIGNALS PAINTING EQUIPMENT / VEHICLE PRE-EMPTION / LIGHTING / FIBER INTERCONNECT AT KIRBY AVE.		FAP 804/(US 45 URBAN 4 LANE TRAFFIC SIGNAL LIGHTING	
			COUNTY:		CHAMPAIGN		CHAMPAIGN		CHAMPAIGN		CHAMPAIGN		CHAMPAIGN		CHAMPAIGN		CHAMPAIGN		CHAMPAIGN		CHAMPAIGN
			FUNDING BREAKOUT:		80% FED 20% STATE		80% FED 20% VILLAGE OF SAVOY		80% FED 13.3% STATE 6.7% VILLAGE OF SAVOY		80% FED 20% CITY OF CHAMPAIGN		80% FED 13.3% STATE 6.7% CITY OF CHAMPAIGN		80% FED 10% STATE 10% CITY OF CHAMPAIGN		100% CITY OF CHAMPAIGN		100% VILLAGE OF SAVOY	
			CONSTRUCTION CODE:		0005		0021		0021		0021		0021		0021		0021		0021	
	CODE NO	ITEM		UNIT	TOTAL QUANTITY		QUANTITY		QUANTITY		QUANTITY		QUANTITY		QUANTITY		QUANTITY		QUANTITY		QUANTITY
*	78000400	THERMOPLASTIC PAVEMENT MARKING - LINE 6"		FOOT	3,739.0		3,739.0														
*	78000600	THERMOPLASTIC PAVEMENT MARKING - LINE 12"		FOOT	3,165.0		3,165.0														
*	78000650	THERMOPLASTIC PAVEMENT MARKING - LINE 24"		FOOT	1,748.0		1,748.0														
*	78008330	POLYUREA PAVEMENT MARKING TYPE II - LINE 6"		FOOT	273.0		273.0														
*	78008350	POLYUREA PAVEMENT MARKING TYPE II - LINE 12"		FOOT	279.0		279.0														
*	78008370	POLYUREA PAVEMENT MARKING TYPE II - LINE 24"		FOOT	88.0		88.0														
*	78011000	GROOVING FOR RECESSED PAVEMENT MARKING, LETTERS AND SYMBOLS		SQ FT	3,826.0		3,826.0														
*	78011025	GROOVING FOR RECESSED PAVEMENT MARKING 5"		FOOT	58,231.0		58,231.0														
*	78011035	GROOVING FOR RECESSED PAVEMENT MARKING 7"		FOOT	3,891.0		3,891.0														
*	78011065	GROOVING FOR RECESSED PAVEMENT MARKING 13"		FOOT	3,444.0		3,444.0														
*	78011125	GROOVING FOR RECESSED PAVEMENT MARKING 25"		FOOT	1,820.0		1,820.0														
*	78100100	RAISED REFLECTIVE PAVEMENT MARKER		EACH	1,393.0		1,393.0														
	78300200	RAISED REFLECTIVE PAVEMENT MARKER REMOVAL		EACH	1,393.0		1,393.0														
	78300202	PAVEMENT MARKING REMOVAL - WATER BLASTING		SQ FT	221.0		221.0														

* SPECIALTY ITEM

MODEL: $MODELNAME$
FILE NAME: pw:\\ildot-pw.bentley.com:PWIDOT\Documents\IDOT Offices\District 5\Project\D57099\CADData\CADsheets\D57099-sht-SQ0.dgn

USER NAME = Greg.Eaglin	DESIGNED -	REVISED -	STATE OF ILLINOIS DEPARTMENT OF TRANSPORTATION	SUMMARY OF QUANTITIES	F.A.P. RTE.	SECTION	COUNTY	TOTAL SHEETS	SHEET NO.
	DRAWN -	REVISED -			804	25RS-6	CHAMPAIGN	306	10
PLOT SCALE = 40.0000 ' / in.	CHECKED -	REVISED -					CONTRACT NO. 70991		
PLOT DATE = 7/2/2024	DATE -	REVISED -		SCALE: SHEET 6 OF 13 SHEETS STA. TO STA.		ILLINOIS	FED. AID PROJECT		

SUMMARY OF QUANTITIES

				LOCATION OF WORK:	FAP 804 (US 45) URBAN 4 LANE ROADWAY IMPROVEMENTS STA. 134+98.00 TO STA. 49+00.00	FAP 804/(US 45) URBAN 4 LANE TRAFFIC SIGNALS ARBOUR TOWNE STA. 123+44.00	FAP 804/(US 45) URBAN 4 LANE TRAFFIC SIGNALS BURWASH AVE. STA. 114+58.70	FAP 804/(US 45) URBAN 4 LANE TRAFFIC SIGNALS KNOLLWOOD DR. STA. 70+18.50	FAP 804/(US 45) URBAN 4 LANE TRAFFIC SIGNALS DEVONSHIRE DR. STA. 57+28.30	FAP 804/(US 45) URBAN 4 LANE TRAFFIC SIGNALS WINDSOR RD. FOX / ST MARY KIRBY AVE. HESSEL / STADIUM GREEN ST. STA. 80+03.60 STA. 40+03.40 STA. 26+66.47 STA. 3+42.00 STA. 41+18.60	FAP 804/(US 45) URBAN 4 LANE TRAFFIC SIGNALS PAINTING EQUIPMENT / VEHICLE PRE-EMPTION / LIGHTING / FIBER INTERCONNECT AT KIRBY AVE.	FAP 804/(US 45 URBAN 4 LANE TRAFFIC SIGNAL LIGHTING
				COUNTY:	CHAMPAIGN	CHAMPAIGN	CHAMPAIGN	CHAMPAIGN	CHAMPAIGN	CHAMPAIGN	CHAMPAIGN	CHAMPAIGN
				FUNDING BREAKOUT:	80% FED 20% STATE	80% FED 20% VILLAGE OF SAVOY	80% FED 13.3% STATE 6.7% VILLAGE OF SAVOY	80% FED 20% CITY OF CHAMPAIGN	80% FED 13.3% STATE 6.7% CITY OF CHAMPAIGN	80% FED 10% STATE 10% CITY OF CHAMPAIGN	100% CITY OF CHAMPAIGN	100% VILLAGE OF SAVOY
				CONSTRUCTION CODE:	0005	0021	0021	0021	0021	0021	0021	0021
	CODE NO	ITEM	UNIT	TOTAL QUANTITY	QUANTITY	QUANTITY	QUANTITY	QUANTITY	QUANTITY	QUANTITY	QUANTITY	QUANTITY
*	81028330	UNDERGROUND CONDUIT, PVC, 1 1/4" DIA.	FOOT	546.0	206.0	191.0	149.0					
*	81028350	UNDERGROUND CONDUIT, PVC, 2" DIA.	FOOT	3,537.0	401.0	1,101.0	916.0	104.0	138.0	877.0		
*	81028360	UNDERGROUND CONDUIT, PVC, 2 1/2" DIA.	FOOT	420.0		37.0	101.0	37.0	30.0	215.0		
*	81028370	UNDERGROUND CONDUIT, PVC, 3" DIA.	FOOT	3,213.0		330.0	194.0	344.0	320.0	1,335.0	690.0	
*	81028380	UNDERGROUND CONDUIT, PVC, 3 1/2" DIA.	FOOT	278.0				25.0	21.0	232.0		
*	81028390	UNDERGROUND CONDUIT, PVC, 4" DIA.	FOOT	551.0		38.0	8.0	8.0	12.0	485.0		
*	81400100	HANDHOLE	EACH	49.0		7.0	3.0	6.0	5.0	28.0		
*	81400300	DOUBLE HANDHOLE	EACH	9.0		1.0	1.0	1.0	1.0	5.0		
*	81702110	ELECTRIC CABLE IN CONDUIT, 600V (XLP-TYPE USE) 1/C NO. 10	FOOT	4,463.0							2,821.0	1,642.0
*	82110007	LUMINAIRE, LED, ROADWAY, OUTPUT DESIGNATION G	EACH	12.0							8.0	4.0
*	83600200	LIGHT POLE FOUNDATION, 24" DIAMETER	FOOT	5.0	5.0							
*	84200804	REMOVAL OF POLE FOUNDATION	EACH	1.0	1.0							
*	84400105	RELOCATE EXISTING LIGHTING UNIT	EACH	1.0	1.0							
*	85100500	PAINT NEW TRAFFIC SIGNAL POST	EACH	36.0							36.0	

* SPECIALTY ITEM

MODEL: $MODELNAME$
FILE NAME: pw:\\ildot-pw.bentley.com:PWIDOT\Documents\IDOT Offices\District 5\Projects\D57099\CADData\CADsheets\D57099-sht-500.dgn

USER NAME = Greg.Eaglin	DESIGNED -	REVISED -	STATE OF ILLINOIS DEPARTMENT OF TRANSPORTATION
	DRAWN -	REVISED -	
PLOT SCALE = 40.0000 ' / in.	CHECKED -	REVISED -	
PLOT DATE = 7/2/2024	DATE -	REVISED -	

SUMMARY OF QUANTITIES

SCALE: | SHEET 7 OF 13 SHEETS | STA. TO STA.

F.A.P. RTE.	SECTION	COUNTY	TOTAL SHEETS	SHEET NO.
804	25RS-6	CHAMPAIGN	306	11
		CONTRACT NO. 70991		
		ILLINOIS	FED. AID PROJECT	

SUMMARY OF QUANTITIES

			LOCATION OF WORK:		FAP 804 (US 45) URBAN 4 LANE ROADWAY IMPROVEMENTS STA. 134+98.00 TO STA. 49+00.00		FAP 804/(US 45) URBAN 4 LANE TRAFFIC SIGNALS ARBOUR TOWNE STA. 123+44.00		FAP 804/(US 45) URBAN 4 LANE TRAFFIC SIGNALS BURWASH AVE. STA. 114+58.70		FAP 804/(US 45) URBAN 4 LANE TRAFFIC SIGNALS KNOLLWOOD DR. STA. 70+18.50		FAP 804/(US 45) URBAN 4 LANE TRAFFIC SIGNALS DEVONSHIRE DR. STA. 57+28.30		FAP 804/(US 45) URBAN 4 LANE TRAFFIC SIGNALS WINDSOR RD. FOX / ST MARY KIRBY AVE. HESSEL / STADIUM GREEN ST. STA. 80+03.60 STA. 40+03.40 STA. 26+66.47 STA. 3+42.00 STA. 41+18.60		FAP 804/(US 45) URBAN 4 LANE TRAFFIC SIGNALS PAINTING EQUIPMENT / VEHICLE PRE-EMPTION / LIGHTING / FIBER INTERCONNECT AT KIRBY AVE.		FAP 804/(US 45 URBAN 4 LANE TRAFFIC SIGNALS LIGHTING	
			COUNTY:		CHAMPAIGN		CHAMPAIGN		CHAMPAIGN		CHAMPAIGN		CHAMPAIGN		CHAMPAIGN		CHAMPAIGN		CHAMPAIGN		CHAMPAIGN
			FUNDING BREAKOUT:		80% FED 20% STATE		80% FED 20% VILLAGE OF SAVOY		80% FED 13.3% STATE 6.7% VILLAGE OF SAVOY		80% FED 20% CITY OF CHAMPAIGN		80% FED 13.3% STATE 6.7% CITY OF CHAMPAIGN		80% FED 10% STATE 10% CITY OF CHAMPAIGN		100% CITY OF CHAMPAIGN		100% VILLAGE OF SAVOY	
			CONSTRUCTION CODE:		0005		0021		0021		0021		0021		0021		0021		0021	
	CODE NO	ITEM		UNIT	TOTAL QUANTITY		QUANTITY		QUANTITY		QUANTITY		QUANTITY		QUANTITY		QUANTITY		QUANTITY		QUANTITY
*	85100600	PAINT NEW MAST ARM AND POLE, UNDER 40 FOOT		EACH	8.0														8.0		
*	85100701	PAINT NEW MAST ARM AND POLE, 40 FOOT AND OVER		EACH	10.0														10.0		
*	85100800	PAINT NEW COMBINATION MAST ARM AND POLE, UNDER 40 FOOT		EACH	2.0														2.0		
*	85100901	PAINT NEW COMBINATION MAST ARM AND POLE, 40 FOOT AND OVER		EACH	6.0														6.0		
*	85700200	FULL-ACTUATED CONTROLLER AND TYPE IV CABINET		EACH	9.0				1.0		1.0		1.0		1.0		5.0				
*	86200200	UNINTERRUPTABLE POWER SUPPLY, STANDARD		EACH	9.0				1.0		1.0		1.0		1.0		5.0				
*	87300925	ELECTRIC CABLE IN CONDUIT, TRACER, NO. 14 1C		FOOT	690.0														690.0		
*	87301225	ELECTRIC CABLE IN CONDUIT, SIGNAL NO. 14 3C		FOOT	7,843.0		139.0		228.0		174.0		950.0		263.0		6,089.0				
*	87301235	ELECTRIC CABLE IN CONDUIT, SIGNAL NO. 14 4C		FOOT	7,780.0		126.0		235.0		182.0		1,006.0		273.0		5,958.0				
*	87301245	ELECTRIC CABLE IN CONDUIT, SIGNAL NO. 14 5C		FOOT	15,680.0		60.0		2,054.0		1,626.0		1,724.0		2,088.0		8,128.0				
*	87301255	ELECTRIC CABLE IN CONDUIT, SIGNAL NO. 14 7C		FOOT	13,588.0		60.0		574.0		449.0		812.0		663.0		11,030.0				
*	87301515	ELECTRIC CABLE IN CONDUIT, LEAD-IN, NO. 18 3 PAIR		FOOT	3,340.0		621.0		2,021.0		698.0										
*	87301805	ELECTRIC CABLE IN CONDUIT, SERVICE, NO. 6 2 C		FOOT	196.0				37.0		17.0		15.0		23.0		104.0				
*	87301900	ELECTRIC CABLE IN CONDUIT, EQUIPMENT GROUNDING CONDUCTOR, NO. 6 1C		FOOT	7,431.0		638.0		1,620.0		1,426.0		481.0		498.0		2,768.0				

* SPECIALTY ITEM

MODEL: $MODELNAME$
FILE NAME: pw:\\ildot-pw.bentley.com:PWIDOT\Documents\IDOT Offices\District 5\Project\D57099\CADData\CADsheets\D57099-sht-500.dgn

USER NAME = Greg.Eaglin	DESIGNED -	REVISED -	STATE OF ILLINOIS DEPARTMENT OF TRANSPORTATION	SUMMARY OF QUANTITIES	
	DRAWN -	REVISED -			
PLOT SCALE = 40.0000 ' / in.	CHECKED -	REVISED -			
PLOT DATE = 7/2/2024	DATE -	REVISED -		SCALE: SHEET 8 OF 13 SHEETS STA. TO STA.	

F.A.P. RTE.	SECTION	COUNTY	TOTAL SHEETS	SHEET NO.
804	25RS-6	CHAMPAIGN	306	12
		CONTRACT NO. 70991		
		ILLINOIS FED. AID PROJECT		

SUMMARY OF QUANTITIES

LOCATION OF WORK:	FAP 804 (US 45) URBAN 4 LANE ROADWAY IMPROVEMENTS	FAP 804/(US 45) URBAN 4 LANE TRAFFIC SIGNALS ARBOUR TOWNE	FAP 80/(US 45) URBAN 4 LANE TRAFFIC SIGNALS BURWASH AVE.	FAP 804/(US 45) URBAN 4 LANE TRAFFIC SIGNALS KNOLLWOOD DR.	FAP 804/(US 45) URBAN 4 LANE TRAFFIC SIGNALS DEVONSHIRE DR.	FAP 804/(US 45) URBAN 4 LANE TRAFFIC SIGNALS WINDSOR RD. FOX / ST MARY KIRBY AVE. HESSEL / STADIUM GREEN ST.	FAP 804/(US 45) URBAN 4 LANE TRAFFIC SIGNALS PAINTING EQUIPMENT / VEHICLE PRE-EMPTION / LIGHTING / FIBER INTERCONNECT AT KIRBY AVE.	FAP 804/(US 45 URBAN 4 LANE TRAFFIC SIGNAL LIGHTING
	STA. 134+98.00 TO STA. 49+00.00	STA. 123+44.00	STA. 114+58.70	STA. 70+18.50	STA. 57+28.30	STA. 80+03.60 STA. 40+03.40 STA. 26+66.47 STA. 3+42.00 STA. 41+18.60		
COUNTY:	CHAMPAIGN	CHAMPAIGN	CHAMPAIGN	CHAMPAIGN	CHAMPAIGN	CHAMPAIGN	CHAMPAIGN	CHAMPAIGN
FUNDING BREAKOUT:	80% FED 20% STATE	80% FED 20% VILLAGE OF SAVOY	80% FED 13.3% STATE 6.7% VILLAGE OF SAVOY	80% FED 20% CITY OF CHAMPAIGN	80% FED 13.3% STATE 6.7% CITY OF CHAMPAIGN	80% FED 10% STATE 10% CITY OF CHAMPAIGN	100% CITY OF CHAMPAIGN	100% VILLAGE OF SAVOY
CONSTRUCTION CODE:	0005	0021	0021	0021	0021	0021	0021	0021

	CODE NO	ITEM	UNIT	TOTAL QUANTITY	QUANTITY	QUANTITY	QUANTITY	QUANTITY	QUANTITY	QUANTITY	QUANTITY	QUANTITY
*	87502640	TRAFFIC SIGNAL POST, ALUMINUM 10 FT.	EACH	8.0	2.0					6.0		
*	87502660	TRAFFIC SIGNAL POST, ALUMINUM 12 FT.	EACH	12.0		4.0	3.0		3.0	2.0		
*	87502680	TRAFFIC SIGNAL POST, ALUMINUM 14 FT.	EACH	12.0	1.0		1.0	1.0	1.0	8.0		
*	87502700	TRAFFIC SIGNAL POST, ALUMINUM 16 FT.	EACH	17.0		1.0	1.0	2.0	1.0	12.0		
*	87600200	PEDESTRIAN PUSH-BUTTON POST, TYPE II	EACH	40.0	2.0	2.0	2.0	6.0	2.0	26.0		
*	87700140	STEEL MAST ARM ASSEMBLY AND POLE, 20 FT.	EACH	1.0						1.0		
*	87700190	STEEL MAST ARM ASSEMBLY AND POLE, 30 FT.	EACH	1.0				1.0				
*	87700200	STEEL MAST ARM ASSEMBLY AND POLE, 32 FT.	EACH	1.0						1.0		
*	87700210	STEEL MAST ARM ASSEMBLY AND POLE, 34 FT.	EACH	1.0						1.0		
*	87700220	STEEL MAST ARM ASSEMBLY AND POLE, 36 FT.	EACH	1.0				1.0				
*	87700230	STEEL MAST ARM ASSEMBLY AND POLE, 38 FT.	EACH	3.0						3.0		
*	87700240	STEEL MAST ARM ASSEMBLY AND POLE, 40 FT.	EACH	2.0				1.0		1.0		
*	87700250	STEEL MAST ARM ASSEMBLY AND POLE, 42 FT.	EACH	1.0					1.0			
*	87700260	STEEL MAST ARM ASSEMBLY AND POLE, 44 FT.	EACH	3.0				1.0	1.0	1.0		

* SPECIALTY ITEM

MODEL: $MODELNAME$
FILE NAME: pw:\\ildot-pw.bentley.com:PWIDOT\Documents\IDOT Offices\District 5\Projects\D570991\CADData\CADsheets\D570991-sht-SOQ.dgn

USER NAME = Greg.Eaglin	DESIGNED -	REVISED -	STATE OF ILLINOIS DEPARTMENT OF TRANSPORTATION
	DRAWN -	REVISED -	
PLOT SCALE = 40.0000 ' / in.	CHECKED -	REVISED -	
PLOT DATE = 7/2/2024	DATE -	REVISED -	

SUMMARY OF QUANTITIES

SCALE: SHEET 9 OF 13 SHEETS STA. TO STA.

F.A.P. RTE.	SECTION	COUNTY	TOTAL SHEETS	SHEET NO.
804	25RS-6	CHAMPAIGN	306	13

CONTRACT NO. 70991

ILLINOIS FED. AID PROJECT

SUMMARY OF QUANTITIES

			LOCATION OF WORK:		FAP 804 (US 45) URBAN 4 LANE ROADWAY IMPROVEMENTS STA. 134+98.00 TO STA. 49+00.00		FAP 804/(US 45) URBAN 4 LANE TRAFFIC SIGNALS ARBOUR TOWNE STA. 123+44.00		FAP 804/(US 45) URBAN 4 LANE TRAFFIC SIGNALS BURWASH AVE. STA. 114+58.70		FAP 804/(US 45) URBAN 4 LANE TRAFFIC SIGNALS KNOLLWOOD DR. STA. 70+18.50		FAP 804/(US 45) URBAN 4 LANE TRAFFIC SIGNALS DEVONSHIRE DR. STA. 57+28.30		FAP 804/(US 45) URBAN 4 LANE TRAFFIC SIGNALS WINDSOR RD. FOX / ST MARY KIRBY AVE. HESSEL / STADIUM GREEN ST. STA. 80+03.60 STA. 40+03.40 STA. 26+66.47 STA. 3+42.00 STA. 41+18.60		FAP 804/(US 45) URBAN 4 LANE TRAFFIC SIGNALS PAINTING EQUIPMENT / VEHICLE PRE-EMPTION / LIGHTING / FIBER INTERCONNECT AT KIRBY AVE.		FAP 804/(US 45 URBAN 4 LANE TRAFFIC SIGNALS LIGHTING	
			COUNTY:		CHAMPAIGN		CHAMPAIGN		CHAMPAIGN		CHAMPAIGN		CHAMPAIGN		CHAMPAIGN		CHAMPAIGN		CHAMPAIGN		CHAMPAIGN
			FUNDING BREAKOUT:		80% FED 20% STATE		80% FED 20% VILLAGE OF SAVOY		80% FED 13.3% STATE 6.7% VILLAGE OF SAVOY		80% FED 20% CITY OF CHAMPAIGN		80% FED 13.3% STATE 6.7% CITY OF CHAMPAIGN		80% FED 10% STATE 10% CITY OF CHAMPAIGN		100% CITY OF CHAMPAIGN		100% VILLAGE OF SAVOY	
			CONSTRUCTION CODE:		0005		0021		0021		0021		0021		0021		0021		0021	
	CODE NO	ITEM		UNIT	TOTAL QUANTITY		QUANTITY		QUANTITY		QUANTITY		QUANTITY		QUANTITY		QUANTITY		QUANTITY		QUANTITY
*	87700280	STEEL MAST ARM ASSEMBLY AND POLE, 48 FT.		EACH	2.0												2.0				
*	87700310	STEEL MAST ARM ASSEMBLY AND POLE, 54 FT.		EACH	2.0												2.0				
*	87800100	CONCRETE FOUNDATION, TYPE A		FOOT	144.0		9.0		15.0		15.0		9.0		15.0		81.0				
*	87800150	CONCRETE FOUNDATION, TYPE C		FOOT	27.0				3.0		3.0		3.0		3.0		15.0				
*	87800400	CONCRETE FOUNDATION, TYPE E 30-INCH DIAMETER		FOOT	10.0												10.0				
*	87800415	CONCRETE FOUNDATION, TYPE E 36-INCH DIAMETER		FOOT	371.0				24.0		24.0		48.0		26.0		249.0				
*	87900200	DRILL EXISTING HANDHOLE		EACH	28.0		8.0		4.0		7.0		1.0		1.0		7.0				
*	88040070	SIGNAL HEAD, POLYCARBONATE, LED, 1-FACE, 3-SECTION, BRACKET MOUNTED		EACH	37.0		1.0		7.0		6.0		4.0		7.0		12.0				
*	88040090	SIGNAL HEAD, POLYCARBONATE, LED, 1-FACE, 3-SECTION, MAST ARM MOUNTED		EACH	53.0				4.0		4.0		8.0		4.0		33.0				
*	88040110	SIGNAL HEAD, POLYCARBONATE, LED, 1-FACE, 4-SECTION, BRACKET MOUNTED		EACH	25.0				1.0		1.0		2.0		1.0		20.0				
*	88040120	SIGNAL HEAD, POLYCARBONATE, LED, 1-FACE, 4-SECTION, MAST ARM MOUNTED		EACH	26.0				1.0		1.0		2.0		2.0		20.0				
*	88040150	SIGNAL HEAD, POLYCARBONATE, LED, 1-FACE, 5-SECTION, BRACKET MOUNTED		EACH	14.0		1.0										13.0				
*	88040160	SIGNAL HEAD, POLYCARBONATE, LED, 1-FACE, 5-SECTION, MAST ARM MOUNTED		EACH	3.0												3.0				
*	88102825	PEDESTRIAN SIGNAL HEAD, POLYCARBONATE, LED, 1-FACE, BRACKET MOUNTED WITH COUNT DOWN TIMER		EACH	49.0		3.0		2.0		2.0		6.0		2.0		34.0				

* SPECIALTY ITEM

MODEL: $MODELNAME$
FILE NAME: pw:\\ildot-pw.bentley.com:PWIDOT\Documents\IDOT Offices\District 5\Project\D57099\CADData\CAD sheets\D57099-sht-500.dgn

USER NAME = Greg.Eaglin	DESIGNED -	REVISED -	STATE OF ILLINOIS DEPARTMENT OF TRANSPORTATION	SUMMARY OF QUANTITIES	F.A.P. RTE.	SECTION	COUNTY	TOTAL SHEETS / SHEET NO.
	DRAWN -	REVISED -			804	25RS-6	CHAMPAIGN	306 / 14
PLOT SCALE = 40.0000 ' / in.	CHECKED -	REVISED -					CONTRACT NO. 70991	
PLOT DATE = 7/2/2024	DATE -	REVISED -		SCALE: SHEET 10 OF 13 SHEETS STA. TO STA.		ILLINOIS	FED. AID PROJECT	

SUMMARY OF QUANTITIES

			LOCATION OF WORK:		FAP 804 (US 45) URBAN 4 LANE ROADWAY IMPROVEMENTS STA. 134+98.00 TO STA. 49+00.00		FAP 804/(US 45) URBAN 4 LANE TRAFFIC SIGNALS ARBOUR TOWNE STA. 123+44.00		FAP 804/(US 45) URBAN 4 LANE TRAFFIC SIGNALS BURWASH AVE. STA. 114+58.70		FAP 804/(US 45) URBAN 4 LANE TRAFFIC SIGNALS KNOLLWOOD DR. STA. 70+18.50		FAP 804/(US 45) URBAN 4 LANE TRAFFIC SIGNALS DEVONSHIRE DR. STA. 57+28.30		FAP 804/(US 45) URBAN 4 LANE TRAFFIC SIGNALS WINDSOR RD. FOX / ST MARY KIRBY AVE. HESSEL / STADIUM GREEN ST. STA. 80+03.60 STA. 40+03.40 STA. 26+66.47 STA. 3+42.00 STA. 41+18.60		FAP 804/(US 45) URBAN 4 LANE TRAFFIC SIGNALS PAINTING EQUIPMENT / VEHICLE PRE-EMPTION / LIGHTING / FIBER INTERCONNECT AT KIRBY AVE.		FAP 804/(US 45 URBAN 4 LANE TRAFFIC SIGNALS LIGHTING	
			COUNTY:		CHAMPAIGN		CHAMPAIGN		CHAMPAIGN		CHAMPAIGN		CHAMPAIGN		CHAMPAIGN		CHAMPAIGN		CHAMPAIGN		CHAMPAIGN
			FUNDING BREAKOUT:		80% FED 20% STATE		80% FED 20% VILLAGE OF SAVOY		80% FED 13.3% STATE 6.7% VILLAGE OF SAVOY		80% FED 20% CITY OF CHAMPAIGN		80% FED 13.3% STATE 6.7% CITY OF CHAMPAIGN		80% FED 10% STATE 10% CITY OF CHAMPAIGN		100% CITY OF CHAMPAIGN		100% VILLAGE OF SAVOY	
			CONSTRUCTION CODE:		0005		0021		0021		0021		0021		0021		0021		0021	
	CODE NO	ITEM	UNIT		TOTAL QUANTITY		QUANTITY		QUANTITY		QUANTITY		QUANTITY		QUANTITY		QUANTITY		QUANTITY		QUANTITY
*	88200510	TRAFFIC SIGNAL BACKPLATE, RETROREFLECTIVE	EACH		158.0		2.0		13.0		12.0		16.0		14.0		101.0				
*	88600100	DETECTOR LOOP, TYPE I	FOOT		3,662.0		1,846.0		980.0		836.0										
*	89500300	RELOCATE EXISTING ILLUMINATED SIGN	EACH		4.0														4.0		
*	89501420	RELOCATE EXISTING EMERGENCY VEHICLE PRIORITY SYSTEM, COMPLETE	EACH		2.0		2.0														
*	89502210	MODIFY EXISTING CONTROLLER CABINET	EACH		1.0														1.0		
*	89502375	REMOVE EXISTING TRAFFIC SIGNAL EQUIPMENT	EACH		10.0		1.0		1.0		1.0		1.0		1.0		5.0				
*	89502380	REMOVE EXISTING HANDHOLE	EACH		33.0				5.0		2.0		3.0		4.0		19.0				
*	89502382	REMOVE EXISTING DOUBLE HANDHOLE	EACH		2.0				1.0				1.0								
*	89502385	REMOVE EXISTING CONCRETE FOUNDATION	EACH		77.0		1.0		8.0		8.0		9.0		8.0		43.0				
*	X1400368	RELOCATE EXISTING PTZ CAMERA	EACH		1.0												1.0				
	X4400196	HOT-MIX ASPHALT SURFACE REMOVAL (SPECIAL)	SQ YD		1,819.0		1,819.0														
	X4402020	CONCRETE MEDIAN SURFACE REMOVAL	SQ FT		132.0		132.0														
	X6061005	CONCRETE CURB, TYPE B (SPECIAL)	FOOT		196.0		196.0														
	X6061702	CONCRETE MEDIAN, TYPE SM (DOWELLED)	SQ FT		252.0		252.0														

* SPECIALTY ITEM

MODEL: $MODELNAME$
FILE NAME: pw:\\ildot-pw.bentley.com:PWIDOT\Documents\IDOT Offices\District 5\Projects\D57099\CADData\CADsheets\D57099-sht-500.dgn

USER NAME = Greg.Eaglin	DESIGNED -	REVISED -	STATE OF ILLINOIS DEPARTMENT OF TRANSPORTATION
	DRAWN -	REVISED -	
PLOT SCALE = 40.0000 ' / in.	CHECKED -	REVISED -	
PLOT DATE = 10/29/2024	DATE -	REVISED -	

SUMMARY OF QUANTITIES

SCALE: SHEET 11 OF 13 SHEETS STA. TO STA.

F.A.P. RTE.	SECTION	COUNTY	TOTAL SHEETS	SHEET NO.
804	25RS-6	CHAMPAIGN	306	15
		CONTRACT NO. 70991		
		ILLINOIS FED. AID PROJECT		

SUMMARY OF QUANTITIES

				LOCATION OF WORK:	FAP 804 (US 45) URBAN 4 LANE ROADWAY IMPROVEMENTS STA. 134+98.00 TO STA. 49+00.00		FAP 804/(US 45) URBAN 4 LANE TRAFFIC SIGNALS ARBOUR TOWNE STA. 123+44.00		FAP 804/(US 45) URBAN 4 LANE TRAFFIC SIGNALS BURWASH AVE. STA. 114+58.70		FAP 804/(US 45) URBAN 4 LANE TRAFFIC SIGNALS KNOLLWOOD DR. STA. 70+18.50		FAP 804/(US 45) URBAN 4 LANE TRAFFIC SIGNALS DEVONSHIRE DR. STA. 57+28.30		FAP 804/(US 45) URBAN 4 LANE TRAFFIC SIGNALS WINDSOR RD. FOX / ST MARY KIRBY AVE. HESSEL / STADIUM GREEN ST. STA. 80+03.60 STA. 40+03.40 STA. 26+66.47 STA. 3+42.00 STA. 41+18.60		FAP 804/(US 45) URBAN 4 LANE TRAFFIC SIGNALS PAINTING EQUIPMENT / VEHICLE PRE-EMPTION / LIGHTING / FIBER INTERCONNECT AT KIRBY AVE.		FAP 804/(US 45 URBAN 4 LANE TRAFFIC SIGNALS LIGHTING	
				COUNTY:	CHAMPAIGN		CHAMPAIGN		CHAMPAIGN		CHAMPAIGN		CHAMPAIGN		CHAMPAIGN		CHAMPAIGN		CHAMPAIGN	
				FUNDING BREAKOUT:	80% FED 20% STATE		80% FED 20% VILLAGE OF SAVOY		80% FED 13.3% STATE 6.7% VILLAGE OF SAVOY		80% FED 20% CITY OF CHAMPAIGN		80% FED 13.3% STATE 6.7% CITY OF CHAMPAIGN		80% FED 10% STATE 10% CITY OF CHAMPAIGN		100% CITY OF CHAMPAIGN		100% VILLAGE OF SAVOY	
				CONSTRUCTION CODE:	0005		0021		0021		0021		0021		0021		0021		0021	
	CODE NO	ITEM	UNIT		TOTAL QUANTITY		QUANTITY		QUANTITY		QUANTITY		QUANTITY		QUANTITY		QUANTITY		QUANTITY	
*	X8050115	SERVICE INSTALLATION, TYPE A (MODIFIED)	EACH		9.0				1.0		1.0		1.0		1.0		5.0			
*	X8100105	CONDUIT SPLICE	EACH		2.0								2.0							
*	X8140115	HANDHOLE TO BE ADJUSTED	EACH		7.0		2.0										5.0			
*	X8510204	PAINT NEW PEDESTRIAN PUSH-BUTTON POST	EACH		34.0														34.0	
*	X8710036	FIBER OPTIC CABLE 12 FIBERS, SINGLE MODE	FOOT		690.0														690.0	
*	X8710070	FIBER OPTIC INTERCONNECT CENTER, 24 PORT	EACH		2.0														2.0	
*	X8710071	FIBER OPTIC FUSION SPLICE	EACH		3.0								1.0				2.0			
*	X8710103	ETHERNET SWITCH	EACH		10.0				1.0		1.0		1.0		1.0		5.0		1.0	
*	X8760200	ACCESSIBLE PEDESTRIAN SIGNALS	EACH		50.0		4.0		2.0		2.0		6.0		2.0		34.0			
*	X8770127	STEEL COMBINATION MAST ARM ASSEMBLY AND POLE 32 FT. (SPECIAL)	EACH		2.0				1.0		1.0									
*	X8770134	STEEL COMBINATION MAST ARM ASSEMBLY AND POLE 34 FT. (SPECIAL)	EACH		1.0												1.0			
*	X8770137	STEEL COMBINATION MAST ARM ASSEMBLY AND POLE 38 FT. (SPECIAL)	EACH		1.0												1.0			
*	X8770139	STEEL COMBINATION MAST ARM ASSEMBLY AND POLE 44 FT. (SPECIAL)	EACH		1.0				1.0											
*	X8770140	STEEL COMBINATION MAST ARM ASSEMBLY AND POLE 46 FT. (SPECIAL)	EACH		3.0						1.0						2.0			

* SPECIALTY ITEM

MODEL: $MODELNAME$
FILE NAME: pw:\\ildot-pw.bentley.com:PWIDOT\Documents\IDOT Offices\District 5\Projects\D57099\CADData\CADsheets\D57099-sht-SQQ.dgn

USER NAME = Greg.Eaglin	DESIGNED -	REVISED -	
	DRAWN -	REVISED -	
PLOT SCALE = 40.0000 ' / in.	CHECKED -	REVISED -	
PLOT DATE = 10/29/2024	DATE -	REVISED -	

STATE OF ILLINOIS
DEPARTMENT OF TRANSPORTATION

SUMMARY OF QUANTITIES

SCALE: | SHEET 12 OF 13 SHEETS | STA. TO STA.

F.A.P. RTE.	SECTION	COUNTY	TOTAL SHEETS	SHEET NO.
804	25RS-6	CHAMPAIGN	306	16

CONTRACT NO. 70991

ILLINOIS | FED. AID PROJECT

SUMMARY OF QUANTITIES

				LOCATION OF WORK:	FAP 804 (US 45) URBAN 4 LANE ROADWAY IMPROVEMENTS STA. 134+98.00 TO STA. 49+00.00	FAP 804/(US 45) URBAN 4 LANE TRAFFIC SIGNALS ARBOUR TOWNE STA. 123+44.00	FAP 804/(US 45) URBAN 4 LANE TRAFFIC SIGNALS BURWASH AVE. STA. 114+58.70	FAP 804/(US 45) URBAN 4 LANE TRAFFIC SIGNALS KNOLLWOOD DR. STA. 70+18.50	FAP 804/(US 45) URBAN 4 LANE TRAFFIC SIGNALS DEVONSHIRE DR. STA. 57+28.30	FAP 804/(US 45) URBAN 4 LANE TRAFFIC SIGNALS WINDSOR RD. FOX / ST MARY KIRBY AVE. HESSEL / STADIUM GREEN ST. STA. 80+03.60 STA. 40+03.40 STA. 26+66.47 STA. 3+42.00 STA. 41+18.60	FAP 804/(US 45) URBAN 4 LANE TRAFFIC SIGNALS PAINTING EQUIPMENT / VEHICLE PRE-EMPTION / LIGHTING / FIBER INTERCONNECT AT KIRBY AVE.	FAP 804/(US 45 URBAN 4 LANE TRAFFIC SIGNALS LIGHTING
				COUNTY:	CHAMPAIGN	CHAMPAIGN	CHAMPAIGN	CHAMPAIGN	CHAMPAIGN	CHAMPAIGN	CHAMPAIGN	CHAMPAIGN
				FUNDING BREAKOUT:	80% FED 20% STATE	80% FED 20% VILLAGE OF SAVOY	80% FED 13.3% STATE 6.7% VILLAGE OF SAVOY	80% FED 20% CITY OF CHAMPAIGN	80% FED 13.3% STATE 6.7% CITY OF CHAMPAIGN	80% FED 10% STATE 10% CITY OF CHAMPAIGN	100% CITY OF CHAMPAIGN	100% VILLAGE OF SAVOY
				CONSTRUCTION CODE:	0005	0021	0021	0021	0021	0021	0021	0021
	CODE NO	ITEM	UNIT	TOTAL QUANTITY	QUANTITY	QUANTITY	QUANTITY	QUANTITY	QUANTITY	QUANTITY	QUANTITY	QUANTITY
*	X8770142	STEEL COMBINATION MAST ARM ASSEMBLY AND POLE 50 FT. (SPECIAL)	EACH	1.0						1.0		
*	X8770154	STEEL COMBINATION MAST ARM ASSEMBLY AND POLE 54 FT. (SPECIAL)	EACH	1.0						1.0		
*	X8770158	STEEL COMBINATION MAST ARM ASSEMBLY AND POLE 58 FT. (SPECIAL)	EACH	1.0						1.0		
*	X8772930	STEEL COMBINATION MAST ARM ASSEMBLY AND POLE 40 FT. (SPECIAL)	EACH	1.0						1.0		
*	X8870300	EMERGENCY VEHICLE PRIORITY SYSTEM	EACH	7.0							7.0	
*	X8891007	VIDEO VEHICLE DETECTION SYSTEM COMPLETE	EACH	7.0				1.0	1.0	5.0		
*	X8950512	REMOVE AND REINSTALL FIBER OPTIC CABLE FROM CONDUIT	FOOT	1,300.0		81.0	64.0	419.0	21.0	715.0		
*	XZ193400	SURVEY MARKER, TYPE 2 (SPECIAL)	EACH	29.0	29.0							
	Z0001110	GAS VALVE TO 3E ADJUSTED	EACH	9.0	9.0							
	Z0010615	CLEANING EXISTING INLETS	EACH	269.0	269.0							
	Z0013798	CONSTRUCTION LAYOUT	L SUM	1.0	1.0							
	Z0048665	RAILROAD PROTECTIVE LIABILITY INSURANCE	L SUM	1.0	1.0							
*	Z0070202	SURVEY MARKER VAULT	EACH	4.0	4.0							
φ	Z0076600	TRAINEES	HOUR	2,000.0	2,000.0							
φ	Z0076604	TRAINEES - TRAINING PROGRAM GRADUATE	HOUR	2,000.0	2,000.0							

* SPECIALTY ITEM

φ 0042

MODEL: $MODELNAME$
FILE NAME: pw:\\ildot-pw.bentley.com:PWIDOT\Documents\IDOT Offices\District 5\Project\D57099\CADData\CADsheets\D57099-sht-SQ0.dgn

USER NAME = Greg.Eaglin	DESIGNED -	REVISED -	STATE OF ILLINOIS DEPARTMENT OF TRANSPORTATION
	DRAWN -	REVISED -	
PLOT SCALE = 40.0000 ' / in.	CHECKED -	REVISED -	
PLOT DATE = 10/29/2024	DATE -	REVISED -	

SUMMARY OF QUANTITIES

SCALE: | SHEET 13 OF 13 SHEETS | STA. TO STA.

F.A.P. RTE.	SECTION	COUNTY	TOTAL SHEETS	SHEET NO.
804	25RS-6	CHAMPAIGN	306	17

CONTRACT NO. 70991

ILLINOIS | FED. AID PROJECT

(A) EXISTING TYPICAL CROSS SECTION

STATION EQUATION:
STA. 133+35.53 (BK) =
STA. 133+35.40 (AH)

STATION	TO	STATION
134+98.00		85+00.00 (B)

NOTE:
TYPICAL CROSS SECTIONS ARE SHOWN GOING FROM SOUTH TO NORTH.
THE WEST SIDE IS CALLED LEFT AND THE EAST SIDE CALLED RIGHT.
STATIONS DECREASE FROM SOUTH TO NORTH ON THIS TYPICAL.

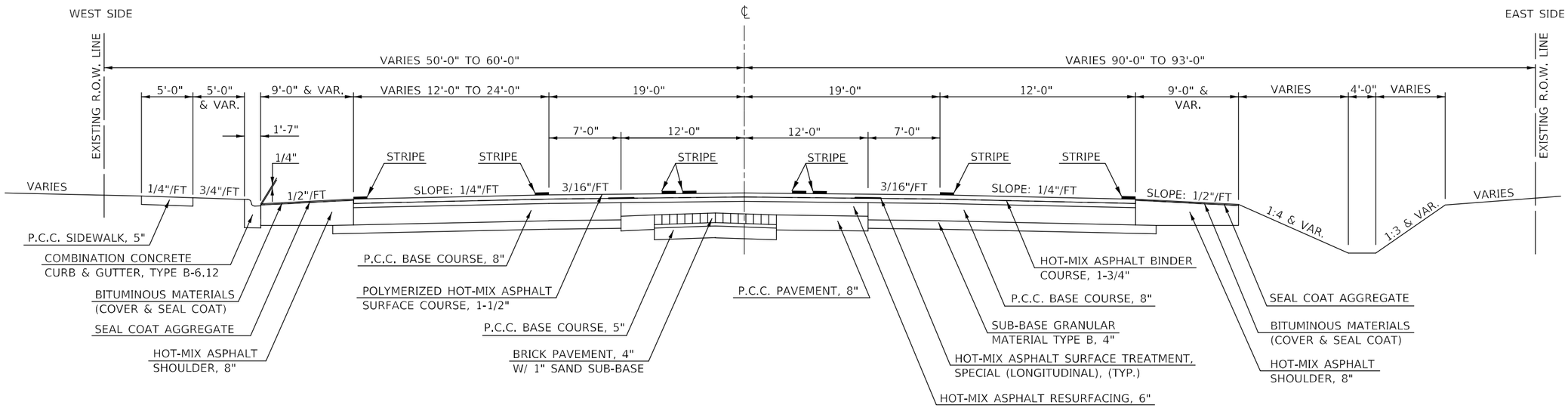

(1) PROPOSED TYPICAL CROSS SECTION

STATION EQUATION:
STA. 133+35.53 (BK) =
STA. 133+35.40 (AH)

STATION	TO	STATION
134+98.00		85+00.00 (2)

NOTE:
TYPICAL CROSS SECTIONS ARE SHOWN GOING FROM SOUTH TO NORTH.
THE WEST SIDE IS CALLED LEFT AND THE EAST SIDE CALLED RIGHT.
STATIONS DECREASE FROM SOUTH TO NORTH ON THIS TYPICAL.

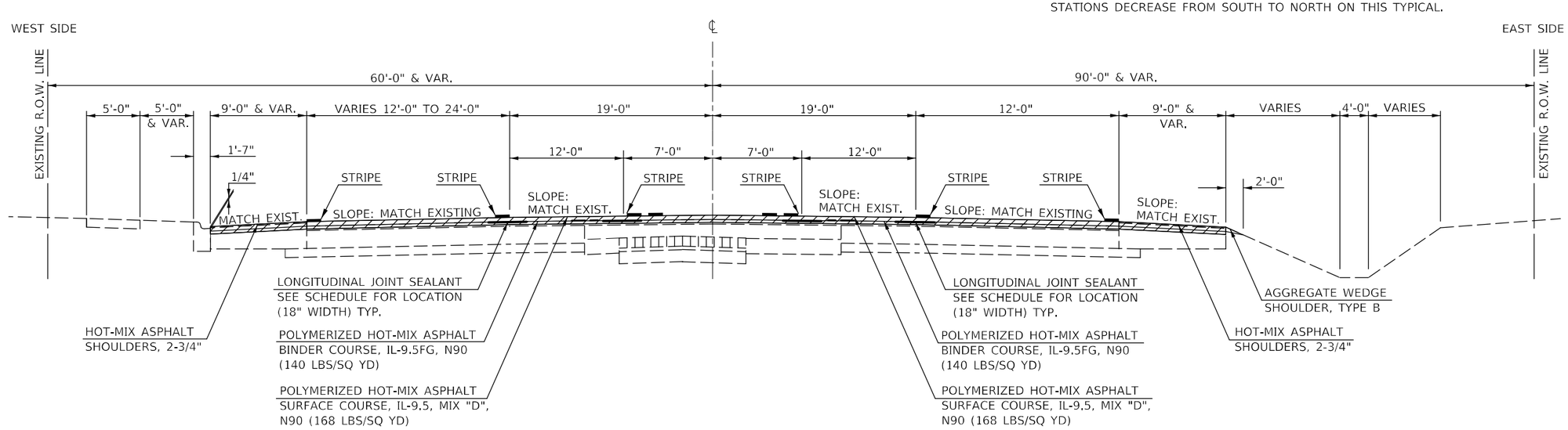

HOT-MIX ASPHALT SURFACE REMOVAL, 2-3/4"

MODEL: SMODEL NAMES
FILE NAME: pw:\\ildot-pw.bentley.com:PWIDOT\Documents\IDOT Offices\District 5\Projects\D570991\CADData\CADsheets\D570991-sht-Typical.dgn

USER NAME = Greg.Eaglin	DESIGNED -	REVISED -	
	DRAWN -	REVISED -	
PLOT SCALE = 40.0000 ' / in.	CHECKED -	REVISED -	
PLOT DATE = 6/26/2024	DATE -	REVISED -	

STATE OF ILLINOIS
DEPARTMENT OF TRANSPORTATION

TYPICAL CROSS SECTION

SCALE: SHEET 1 OF 14 SHEETS STA. TO STA.

F.A.P. RTE.	SECTION	COUNTY	TOTAL SHEETS	SHEET NO.
804	25RS-6	CHAMPAIGN	306	18

CONTRACT NO. 70991

ILLINOIS FED. AID PROJECT

(B) EXISTING TYPICAL CROSS SECTION

STATION EQUATION:
STA. 81+35.26 (BK) =
STA. 81+35.00 (AH)

STATION 85+00.00 TO STATION 80+00.00 (C)

NOTE:
TYPICAL CROSS SECTIONS ARE SHOWN GOING FROM SOUTH TO NORTH.
THE WEST SIDE IS CALLED LEFT AND THE EAST SIDE CALLED RIGHT.
STATIONS DECREASE FROM SOUTH TO NORTH ON THIS TYPICAL.

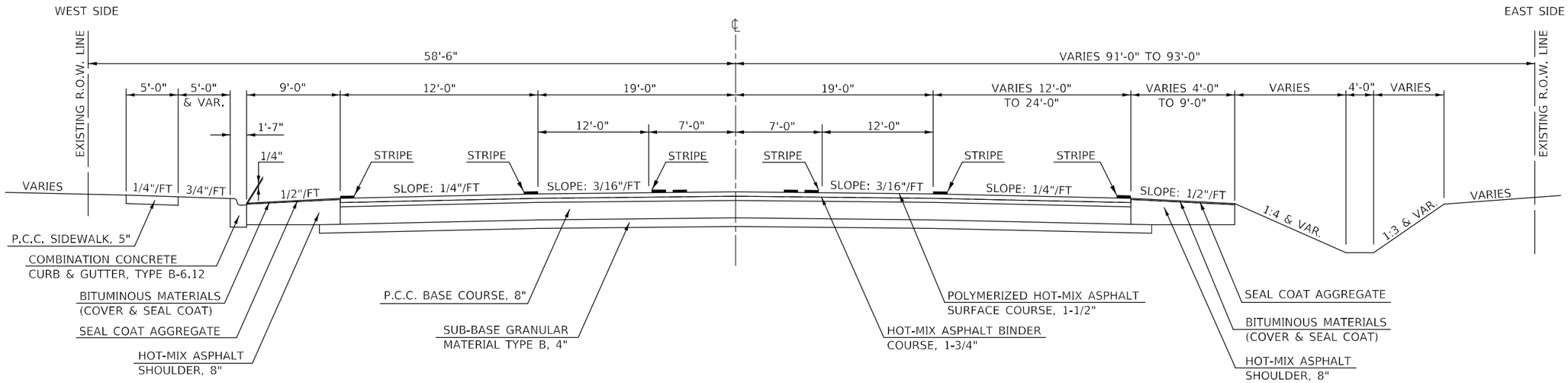

(2) PROPOSED TYPICAL CROSS SECTION

STATION EQUATION:
STA. 81+35.26 (BK) =
STA. 81+35.00 (AH)

STATION 85+00.00 TO STATION 80+00.00 (3)

NOTE:
TYPICAL CROSS SECTIONS ARE SHOWN GOING FROM SOUTH TO NORTH.
THE WEST SIDE IS CALLED LEFT AND THE EAST SIDE CALLED RIGHT.
STATIONS DECREASE FROM SOUTH TO NORTH ON THIS TYPICAL.

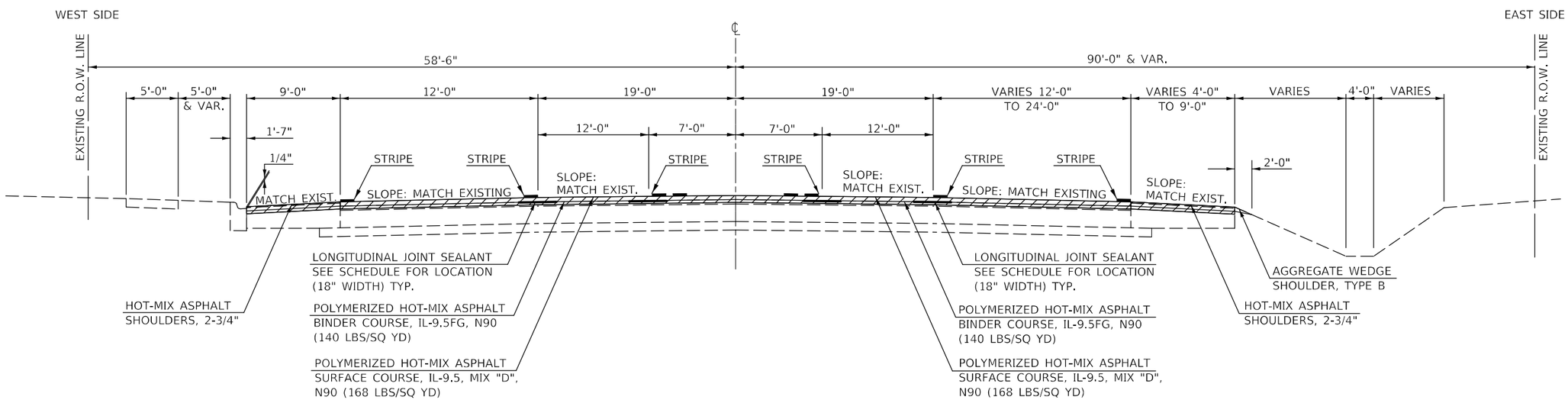

HOT-MIX ASPHALT SURFACE REMOVAL, 2-3/4"

MODEL: SMODEL NAME
FILE NAME: pw:\\ildot-pw.bentley.com:PWIDOT\Documents\IDOT Offices\District 5\Projects\D570991\CADData\CADsheets\D570991-sht-Typical.dgn

USER NAME = Greg.Eaglin	DESIGNED -	REVISED -	
	DRAWN -	REVISED -	
PLOT SCALE = 40.0000 ' / in.	CHECKED -	REVISED -	
PLOT DATE = 6/26/2024	DATE -	REVISED -	

STATE OF ILLINOIS
DEPARTMENT OF TRANSPORTATION

TYPICAL CROSS SECTION

SCALE: SHEET 2 OF 14 SHEETS STA. TO STA.

F.A.P. RTE.	SECTION	COUNTY	TOTAL SHEETS	SHEET NO.
804	25RS-6	CHAMPAIGN	306	19
		CONTRACT NO. 70991		
		ILLINOIS FED. AID PROJECT		

(C) EXISTING TYPICAL CROSS SECTION

STATION (B) 80+00.00 TO STATION 74+27.45 (D)

NOTE:
TYPICAL CROSS SECTIONS ARE SHOWN GOING FROM SOUTH TO NORTH.
THE WEST SIDE IS CALLED LEFT AND THE EAST SIDE CALLED RIGHT.
STATIONS DECREASE FROM SOUTH TO NORTH ON THIS TYPICAL.

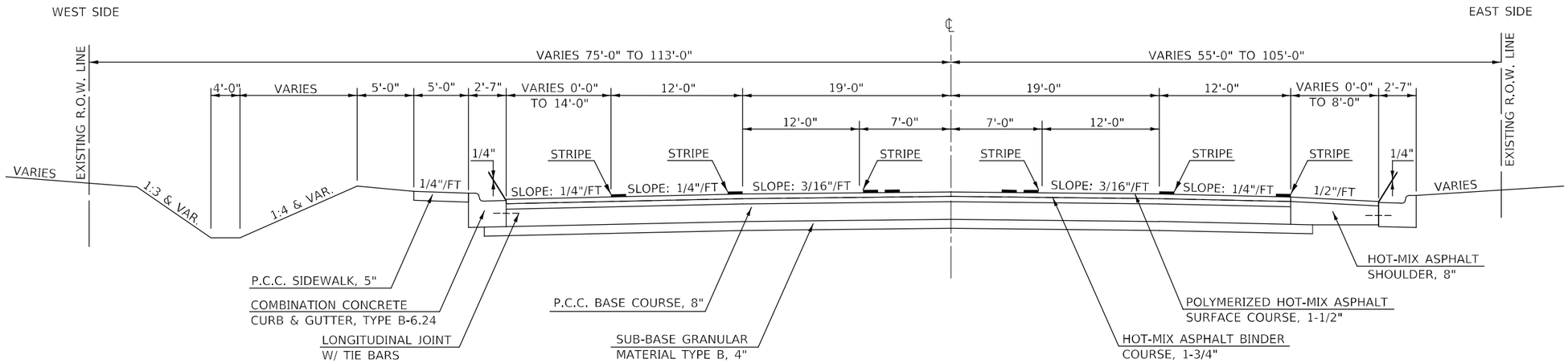

(3) PROPOSED TYPICAL CROSS SECTION

STATION (2) 80+00.00 TO STATION 74+27.45 (4)

NOTE:
TYPICAL CROSS SECTIONS ARE SHOWN GOING FROM SOUTH TO NORTH.
THE WEST SIDE IS CALLED LEFT AND THE EAST SIDE CALLED RIGHT.
STATIONS DECREASE FROM SOUTH TO NORTH ON THIS TYPICAL.

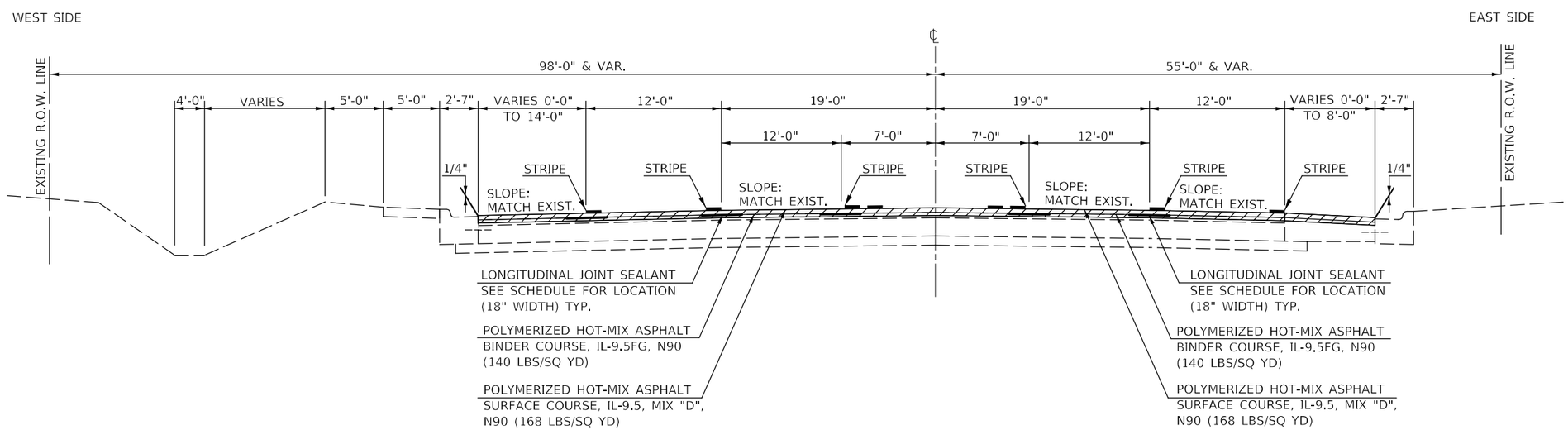

HOT-MIX ASPHALT SURFACE REMOVAL, 2-3/4"

MODEL: $MODEL NAMES
FILE NAME: pw:\\ildot-pw.bentley.com:PWIDOT\Documents\IDOT Offices\District 5\Projects\D57099\CADData\CADsheets\D57099-sht-Typical.dgn

USER NAME = Greg.Eaglin	DESIGNED -	REVISED -	STATE OF ILLINOIS DEPARTMENT OF TRANSPORTATION
	DRAWN -	REVISED -	
PLOT SCALE = 40.0000 ' / in.	CHECKED -	REVISED -	
PLOT DATE = 6/26/2024	DATE -	REVISED -	

TYPICAL CROSS SECTION

SCALE: SHEET 3 OF 14 SHEETS STA. TO STA.

F.A.P. RTE.	SECTION	COUNTY	TOTAL SHEETS	SHEET NO.
804	25RS-6	CHAMPAIGN	306	20
		CONTRACT NO. 70991		
		ILLINOIS FED. AID PROJECT		

(D) EXISTING TYPICAL CROSS SECTION

STATION (C) 74+27.45 TO STATION 68+00.00 (E)

NOTE:
TYPICAL CROSS SECTIONS ARE SHOWN GOING FROM SOUTH TO NORTH.
THE WEST SIDE IS CALLED LEFT AND THE EAST SIDE CALLED RIGHT.
STATIONS DECREASE FROM SOUTH TO NORTH ON THIS TYPICAL.

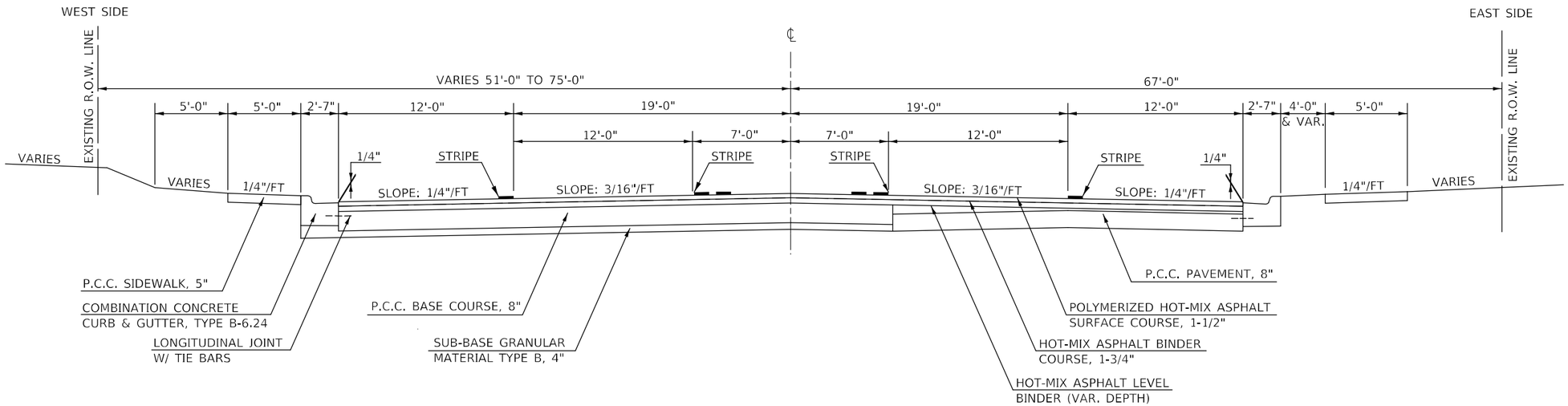

(4) PROPOSED TYPICAL CROSS SECTION

STATION (3) 74+27.45 TO STATION 68+00.00 (5)

NOTE:
TYPICAL CROSS SECTIONS ARE SHOWN GOING FROM SOUTH TO NORTH.
THE WEST SIDE IS CALLED LEFT AND THE EAST SIDE CALLED RIGHT.
STATIONS DECREASE FROM SOUTH TO NORTH ON THIS TYPICAL.

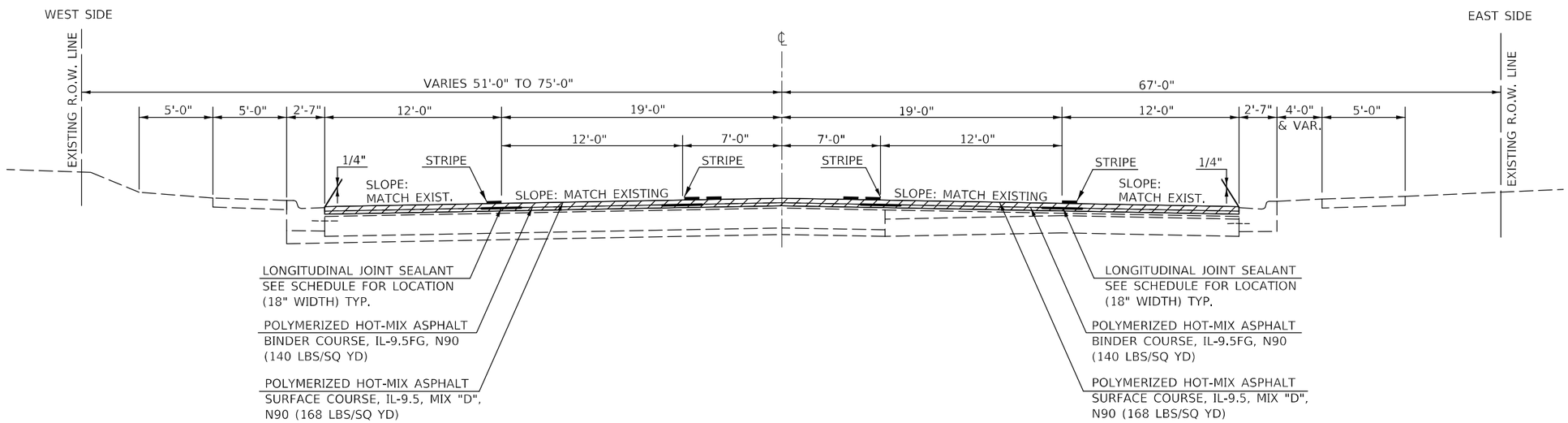

HOT-MIX ASPHALT SURFACE REMOVAL, 2-3/4"

MODEL: $MODEL NAMES
FILE NAME: pw:\\ildot-pw.bentley.com:PWIDOT\Documents\IDOT Offices\District 5\Projects\D57099\CADData\CADsheets\D57099-sht-Typical.dgn

USER NAME = Greg.Eaglin	DESIGNED -	REVISED -	STATE OF ILLINOIS DEPARTMENT OF TRANSPORTATION
	DRAWN -	REVISED -	
PLOT SCALE = 40.0000 ' / in.	CHECKED -	REVISED -	
PLOT DATE = 6/26/2024	DATE -	REVISED -	

TYPICAL CROSS SECTION

SCALE: SHEET 4 OF 14 SHEETS STA. TO STA.

F.A.P. RTE.	SECTION	COUNTY	TOTAL SHEETS	SHEET NO.
804	25RS-6	CHAMPAIGN	306	21
		CONTRACT NO. 70991		
		ILLINOIS FED. AID PROJECT		

(E) EXISTING TYPICAL CROSS SECTION

STATION EQUATIONS:
STA. 47+11.85 (BK) = STA. 47+12.48 (AH)
STA. 43+44.72 (BK) = STA. 43+44.41 (AH)

STATION	TO	STATION
(D) 68+00.00		40+00.00 (F)

NOTE:
TYPICAL CROSS SECTIONS ARE SHOWN GOING FROM SOUTH TO NORTH. THE WEST SIDE IS CALLED LEFT AND THE EAST SIDE CALLED RIGHT. STATIONS DECREASE FROM SOUTH TO NORTH ON THIS TYPICAL.

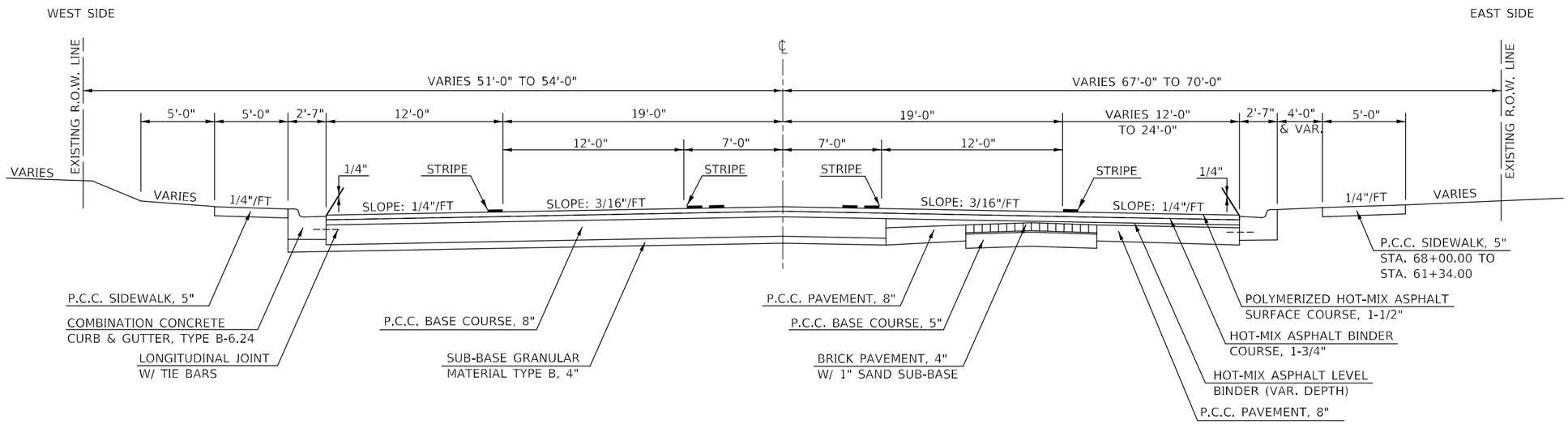

(5) PROPOSED TYPICAL CROSS SECTION

STATION EQUATIONS:
STA. 47+11.85 (BK) = STA. 47+12.48 (AH)
STA. 43+44.72 (BK) = STA. 43+44.41 (AH)

STATION	TO	STATION
(4) 68+00.00		40+00.00 (6)

NOTE:
TYPICAL CROSS SECTIONS ARE SHOWN GOING FROM SOUTH TO NORTH. THE WEST SIDE IS CALLED LEFT AND THE EAST SIDE CALLED RIGHT. STATIONS DECREASE FROM SOUTH TO NORTH ON THIS TYPICAL.

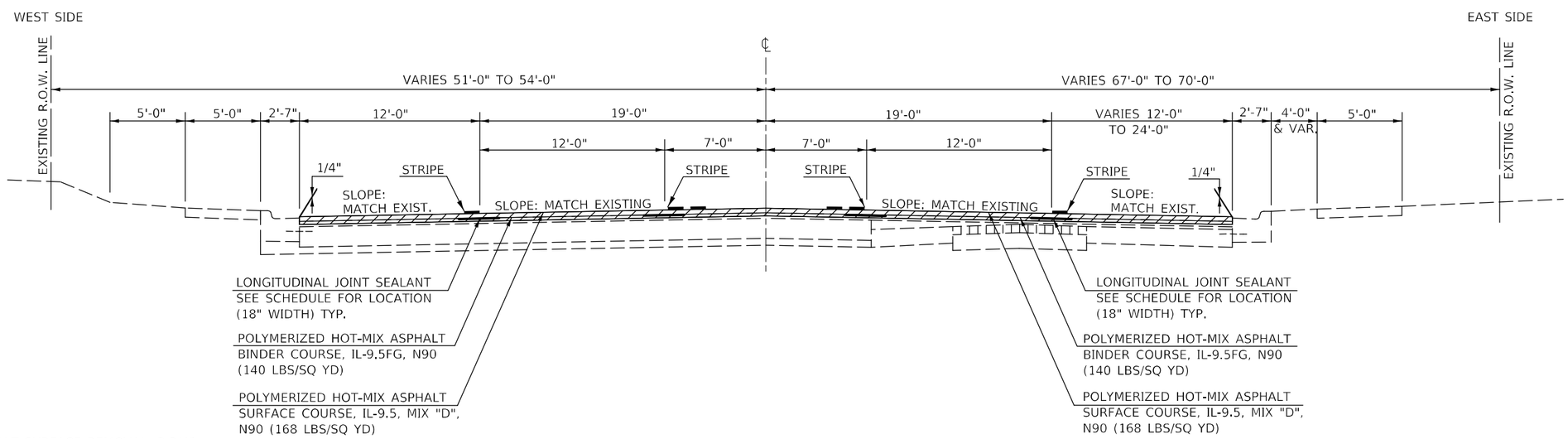

HOT-MIX ASPHALT SURFACE REMOVAL, 2-3/4"

MODEL: $MODEL$NAMES
FILE NAME: pw:\\ildot-pw.bentley.com:PWIDOT\Documents\IDOT Offices\District 5\Projects\D57099\CADData\CADsheets\D57099-sht-Typical.dgn

USER NAME = Greg.Eaglin	DESIGNED -	REVISED -	
	DRAWN -	REVISED -	
PLOT SCALE = 40.0000 ' / in.	CHECKED -	REVISED -	
PLOT DATE = 6/26/2024	DATE -	REVISED -	

STATE OF ILLINOIS
DEPARTMENT OF TRANSPORTATION

TYPICAL CROSS SECTION

SCALE: | SHEET 5 OF 14 SHEETS | STA. | TO STA.

F.A.P. RTE.	SECTION	COUNTY	TOTAL SHEETS	SHEET NO.
804	25RS-6	CHAMPAIGN	306	22

CONTRACT NO. 70991

ILLINOIS | FED. AID PROJECT

(F) EXISTING TYPICAL CROSS SECTION

STATION	TO	STATION
(E) 40+00.00		36+63.92 (G)

NOTE:
TYPICAL CROSS SECTIONS ARE SHOWN GOING FROM SOUTH TO NORTH. THE WEST SIDE IS CALLED LEFT AND THE EAST SIDE CALLED RIGHT. STATIONS DECREASE FROM SOUTH TO NORTH ON THIS TYPICAL.

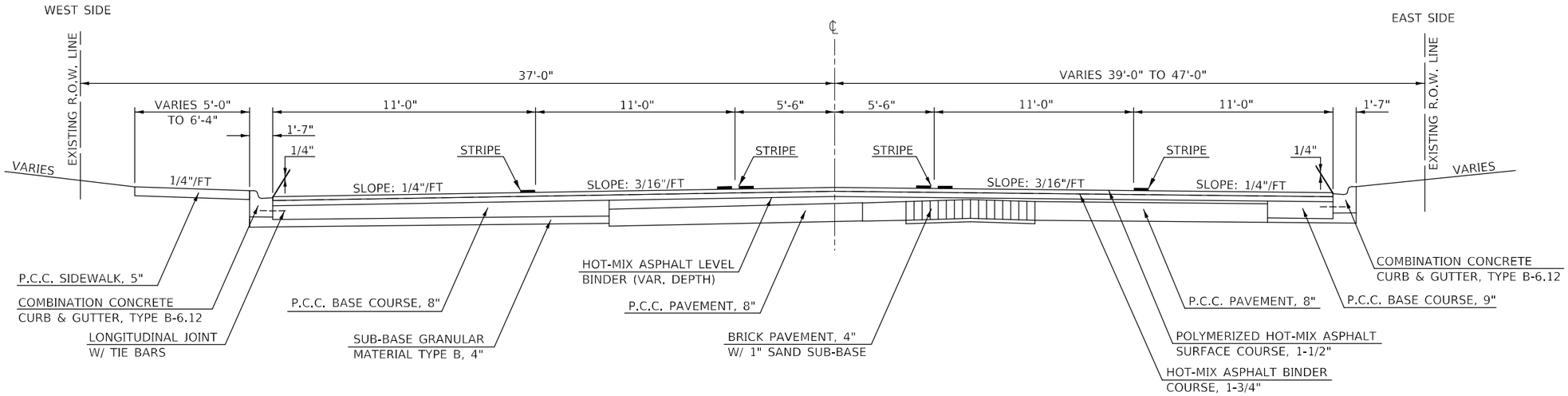

(6) PROPOSED TYPICAL CROSS SECTION

STATION	TO	STATION
(5) 40+00.00		36+63.92 (7)

NOTE:
TYPICAL CROSS SECTIONS ARE SHOWN GOING FROM SOUTH TO NORTH. THE WEST SIDE IS CALLED LEFT AND THE EAST SIDE CALLED RIGHT. STATIONS DECREASE FROM SOUTH TO NORTH ON THIS TYPICAL.

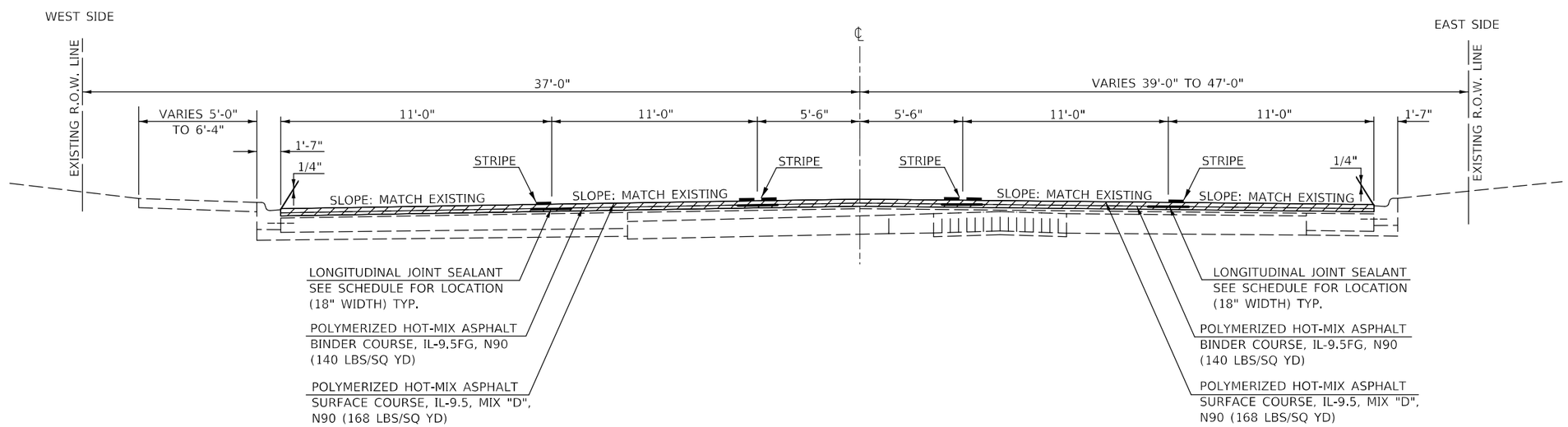

HOT-MIX ASPHALT SURFACE REMOVAL, 2-3/4"

MODEL: $MODEL NAMES
FILE NAME: pw:\\ildot-pw.bentley.com:PWIDOT\Documents\IDOT Offices\District 5\Projects\D57099\CADData\CADsheets\D57099-sht-Typical.dgn

USER NAME = Greg.Eaglin	DESIGNED -	REVISED -	
	DRAWN -	REVISED -	
PLOT SCALE = 40.0000 ' / in.	CHECKED -	REVISED -	
PLOT DATE = 6/26/2024	DATE -	REVISED -	

STATE OF ILLINOIS
DEPARTMENT OF TRANSPORTATION

TYPICAL CROSS SECTION

SCALE: | SHEET 6 OF 14 SHEETS | STA. TO STA.

F.A.P. RTE.	SECTION	COUNTY	TOTAL SHEETS	SHEET NO.
804	25RS-6	CHAMPAIGN	306	23
		CONTRACT NO. 70991		
		ILLINOIS FED. AID PROJECT		

Ⓖ EXISTING TYPICAL CROSS SECTION

STATION	TO	STATION
Ⓕ 36+63.92		29+88.00 Ⓗ

NOTE:
TYPICAL CROSS SECTIONS ARE SHOWN GOING FROM SOUTH TO NORTH.
THE WEST SIDE IS CALLED LEFT AND THE EAST SIDE CALLED RIGHT.
STATIONS DECREASE FROM SOUTH TO NORTH ON THIS TYPICAL.

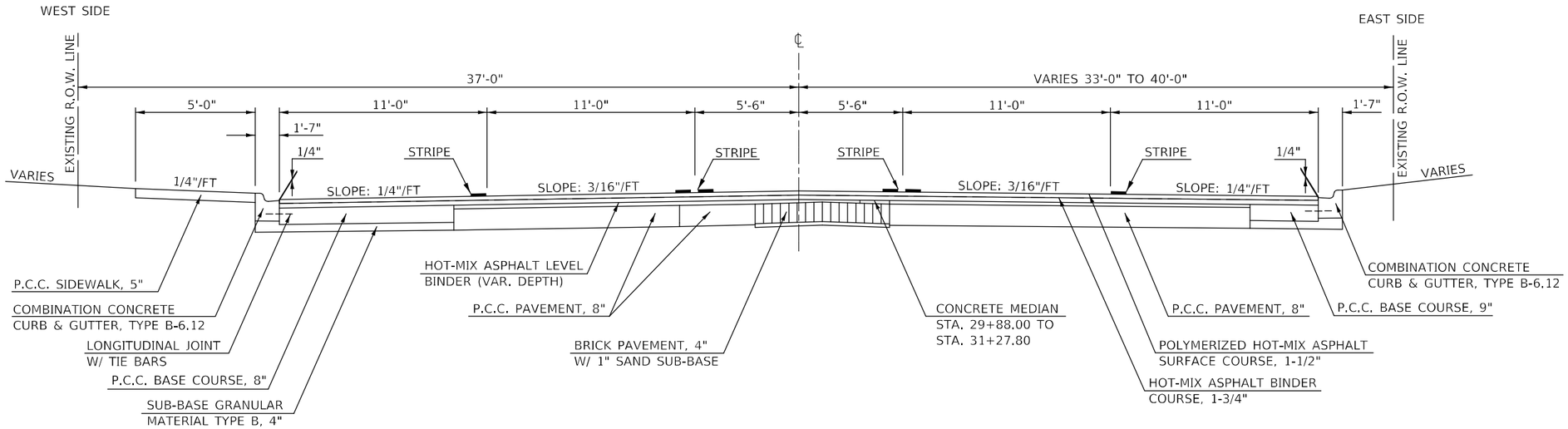

7 PROPOSED TYPICAL CROSS SECTION

STATION	TO	STATION
Ⓖ 36+63.92		29+88.00 Ⓗ

NOTE:
TYPICAL CROSS SECTIONS ARE SHOWN GOING FROM SOUTH TO NORTH.
THE WEST SIDE IS CALLED LEFT AND THE EAST SIDE CALLED RIGHT.
STATIONS DECREASE FROM SOUTH TO NORTH ON THIS TYPICAL.

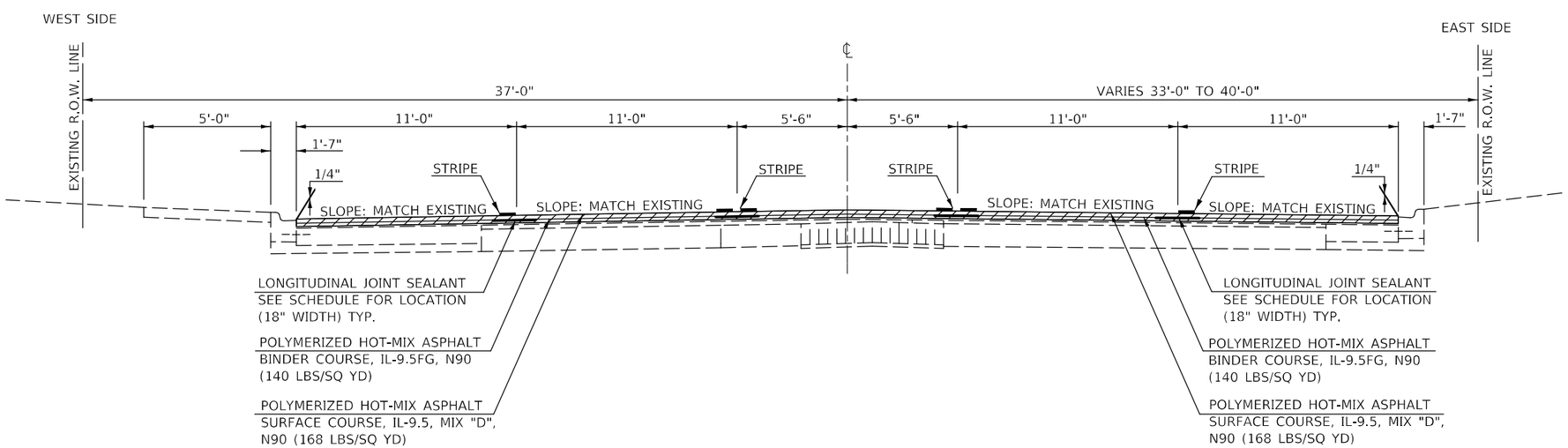

HOT-MIX ASPHALT SURFACE REMOVAL, 2-3/4"

MODEL: $MODEL$NAME$
FILE NAME: pw:\\ildot-pw.bentley.com:PWIDOT\Documents\IDOT Offices\District 5\Projects\D57099\CADData\CADsheets\D57099-sht-Typical.dgn

USER NAME = Greg.Eaglin	DESIGNED -	REVISED -	
	DRAWN -	REVISED -	
PLOT SCALE = 40.0000 ' / in.	CHECKED -	REVISED -	
PLOT DATE = 6/26/2024	DATE -	REVISED -	

STATE OF ILLINOIS
DEPARTMENT OF TRANSPORTATION

TYPICAL CROSS SECTION

SCALE: | SHEET 7 OF 14 SHEETS | STA. TO STA.

F.A.P. RTE.	SECTION	COUNTY	TOTAL SHEETS	SHEET NO.
804	25RS-6	CHAMPAIGN	306	24
		CONTRACT NO. 70991		
		ILLINOIS FED. AID PROJECT		

(H) EXISTING TYPICAL CROSS SECTION

CENTERLINE OFFSET:
STA. 26+68.23 (PI) =
STA. 26+66.47 (POT1)

STATION	TO	STATION
(G) 29+88.00		24+60.00 (I)

NOTE:
TYPICAL CROSS SECTIONS ARE SHOWN GOING FROM SOUTH TO NORTH. THE WEST SIDE IS CALLED LEFT AND THE EAST SIDE CALLED RIGHT. STATIONS DECREASE FROM SOUTH TO NORTH ON THIS TYPICAL.

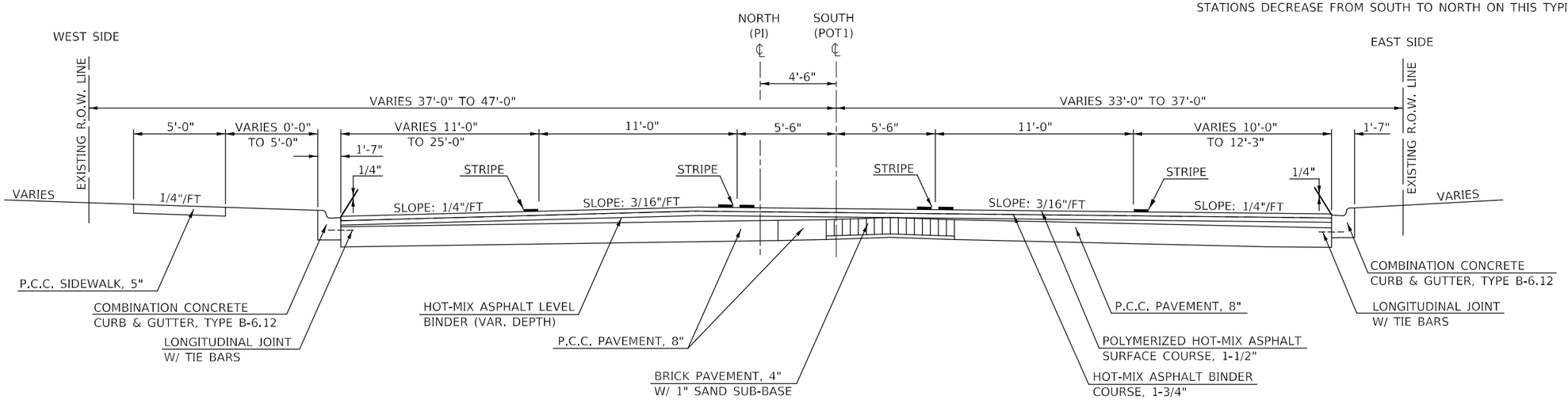

(8) PROPOSED TYPICAL CROSS SECTION

CENTERLINE OFFSET:
STA. 26+68.23 (PI) =
STA. 26+66.47 (POT1)

STATION	TO	STATION
(7) 29+88.00		24+60.00 (9)

NOTE:
TYPICAL CROSS SECTIONS ARE SHOWN GOING FROM SOUTH TO NORTH. THE WEST SIDE IS CALLED LEFT AND THE EAST SIDE CALLED RIGHT. STATIONS DECREASE FROM SOUTH TO NORTH ON THIS TYPICAL.

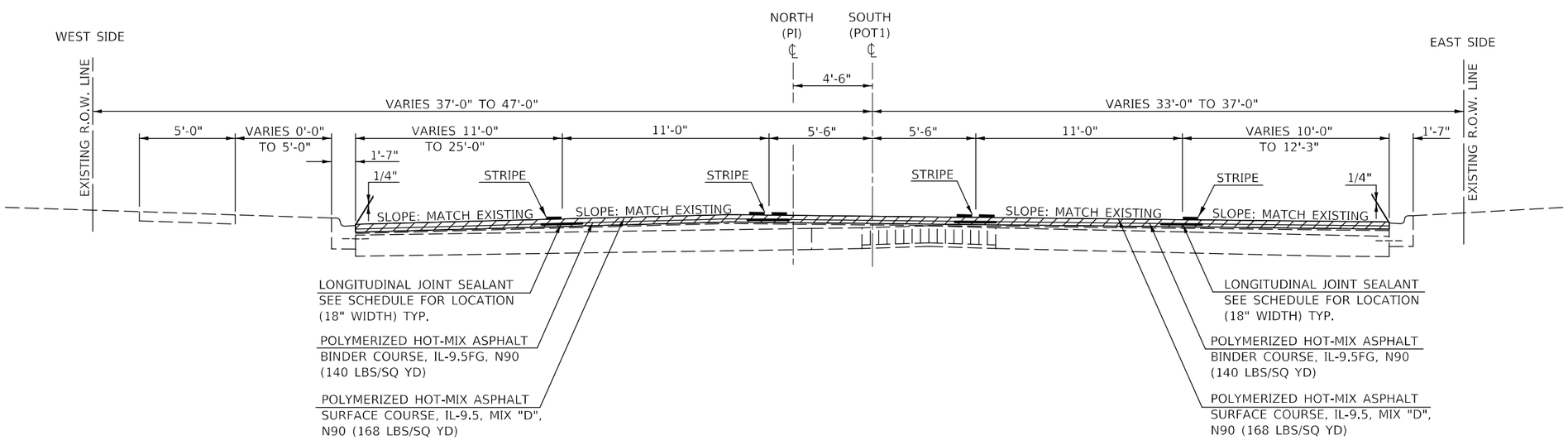

HOT-MIX ASPHALT SURFACE REMOVAL, 2-3/4"

MODEL: $MODEL$NAME
FILE NAME: pw:\\ildot-pw.bentley.com:PWIDOT\Documents\IDOT Offices\District 5\Projects\D57099\CADData\CADsheets\D57099-sht-Typical.dgn

USER NAME = Greg.Eaglin	DESIGNED -	REVISED -	STATE OF ILLINOIS DEPARTMENT OF TRANSPORTATION
	DRAWN -	REVISED -	
PLOT SCALE = 40.0000 ' / in.	CHECKED -	REVISED -	
PLOT DATE = 6/26/2024	DATE -	REVISED -	

TYPICAL CROSS SECTION

SCALE: | SHEET 8 OF 14 SHEETS | STA. TO STA.

F.A.P. RTE.	SECTION	COUNTY	TOTAL SHEETS	SHEET NO.
804	25RS-6	CHAMPAIGN	306	25

CONTRACT NO. 70991

ILLINOIS | FED. AID PROJECT

(I) EXISTING TYPICAL CROSS SECTION

STATION EQUATION:
STA. 13+30.18 (BK) =
STA. 00+00.00 (AH)

STATION	TO	STATION
(H) 24+60.00		13+30.18 (BK) (J)

NOTE:
TYPICAL CROSS SECTIONS ARE SHOWN GOING FROM SOUTH TO NORTH. THE WEST SIDE IS CALLED LEFT AND THE EAST SIDE CALLED RIGHT. STATIONS DECREASE FROM SOUTH TO NORTH ON THIS TYPICAL.

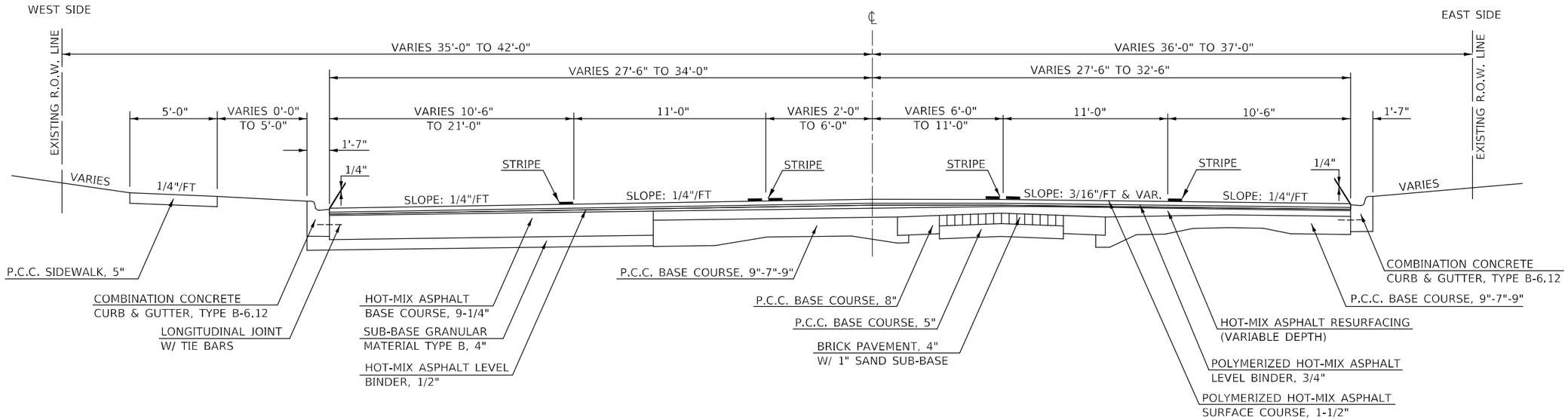

(9) PROPOSED TYPICAL CROSS SECTION

STATION EQUATION:
STA. 13+30.18 (BK) =
STA. 00+00.00 (AH)

STATION	TO	STATION
(8) 24+60.00		13+30.18 (BK) (10)

NOTE:
TYPICAL CROSS SECTIONS ARE SHOWN GOING FROM SOUTH TO NORTH. THE WEST SIDE IS CALLED LEFT AND THE EAST SIDE CALLED RIGHT. STATIONS DECREASE FROM SOUTH TO NORTH ON THIS TYPICAL.

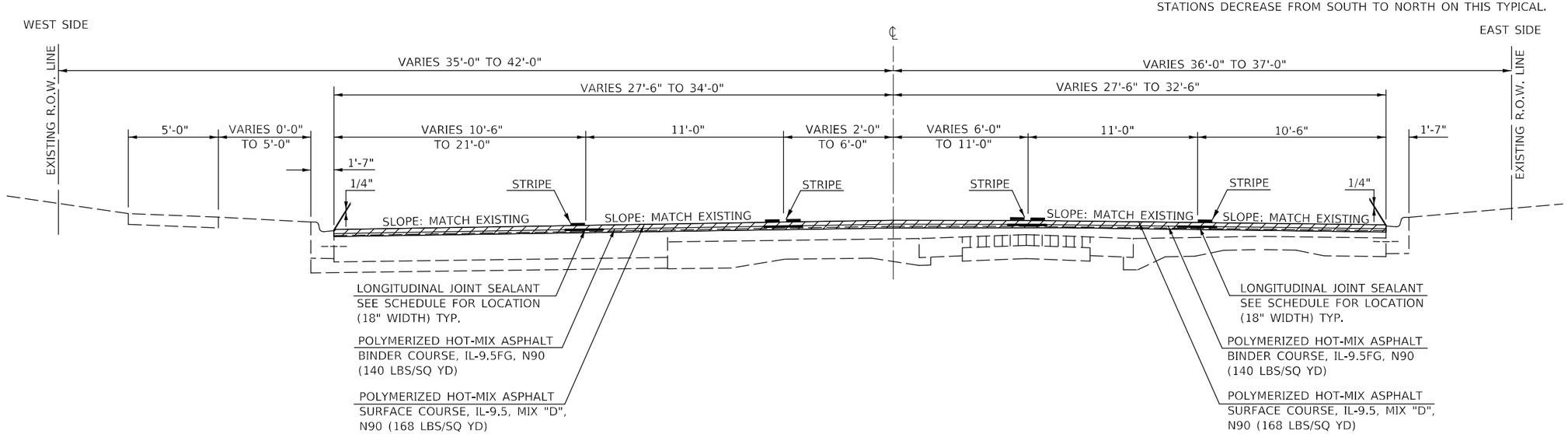

HOT-MIX ASPHALT SURFACE REMOVAL, 2-3/4"

MODEL: SMODELNAMES
FILE NAME: pw:\\ildot-pw.bentley.com:PWIDOT\Documents\IDOT Offices\District 5\Projects\D570991\CADData\CADsheets\D570991-sht-Typical.dgn

USER NAME = Greg.Eaglin	DESIGNED -	REVISED -	STATE OF ILLINOIS DEPARTMENT OF TRANSPORTATION
	DRAWN -	REVISED -	
PLOT SCALE = 40.0000 ' / in.	CHECKED -	REVISED -	
PLOT DATE = 6/26/2024	DATE -	REVISED -	

TYPICAL CROSS SECTION

SCALE: SHEET 9 OF 14 SHEETS STA. TO STA.

F.A.P. RTE.	SECTION	COUNTY	TOTAL SHEETS	SHEET NO.
804	25RS-6	CHAMPAIGN	306	26
		CONTRACT NO. 70991		
		ILLINOIS FED. AID PROJECT		

(J) EXISTING TYPICAL CROSS SECTION

STATION EQUATION:
STA. 13+30.18 (BK) =
STA. 00+00.00 (AH)

STATION	TO	STATION
(I) 00+00.00 (AH)		01+49.98 (K)

NOTE:
TYPICAL CROSS SECTIONS ARE SHOWN GOING FROM SOUTH TO NORTH. THE WEST SIDE IS CALLED LEFT AND THE EAST SIDE CALLED RIGHT. STATIONS INCREASE FROM SOUTH TO NORTH ON THIS TYPICAL.

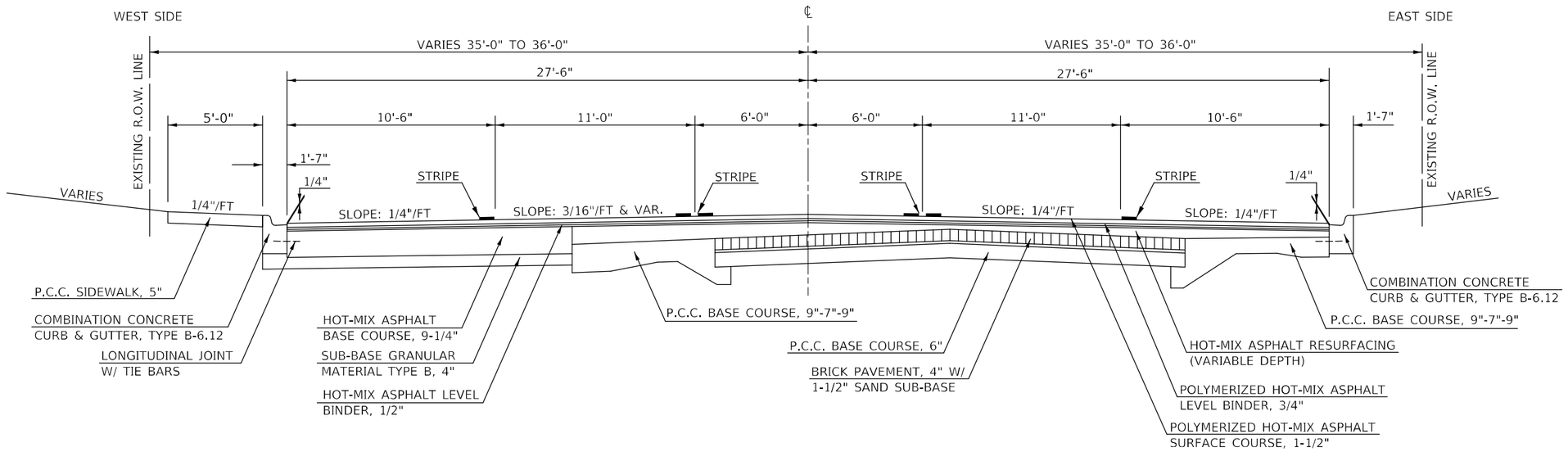

(10) PROPOSED TYPICAL CROSS SECTION

STATION EQUATION:
STA. 13+30.18 (BK) =
STA. 00+00.00 (AH)

STATION	TO	STATION
(9) 00+00.00 (AH)		01+49.98 (11)

NOTE:
TYPICAL CROSS SECTIONS ARE SHOWN GOING FROM SOUTH TO NORTH. THE WEST SIDE IS CALLED LEFT AND THE EAST SIDE CALLED RIGHT. STATIONS INCREASE FROM SOUTH TO NORTH ON THIS TYPICAL.

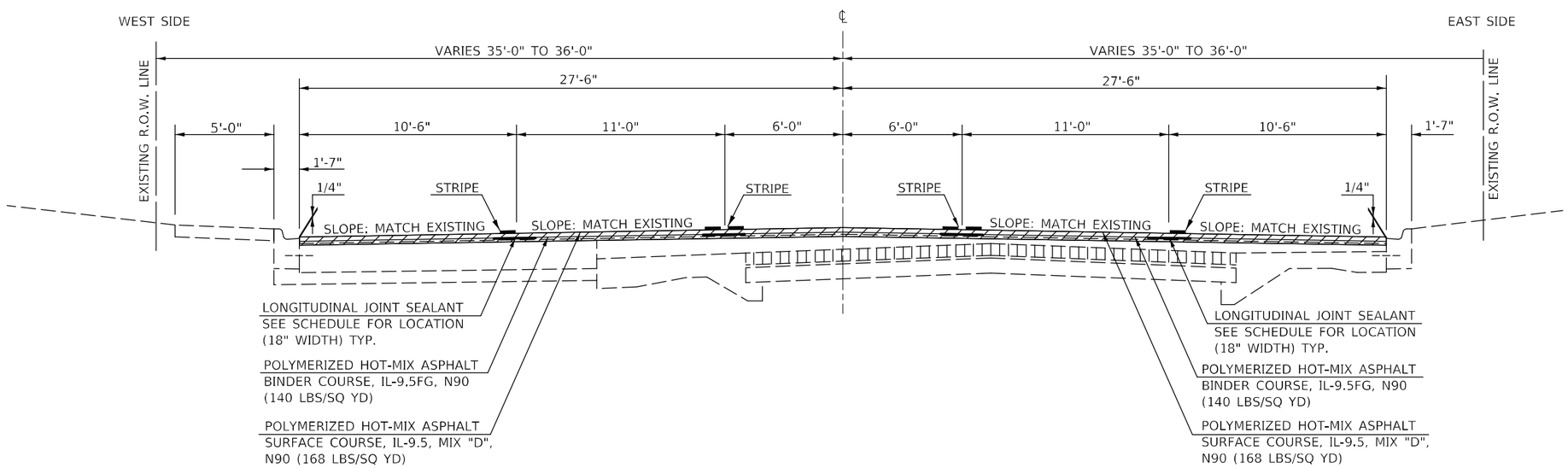

HOT-MIX ASPHALT SURFACE REMOVAL, 2-3/4"

MODEL: SMODELNAMES
FILE NAME: pw:\\ildot-pw.bentley.com:PWIDOT\Documents\IDOT Offices\District 5\Projects\D570991\CADData\CADsheets\D570991-sht-Typical.dgn

USER NAME = Greg.Eaglin	DESIGNED -	REVISED -	STATE OF ILLINOIS DEPARTMENT OF TRANSPORTATION	TYPICAL CROSS SECTION
	DRAWN -	REVISED -		
PLOT SCALE = 40.0000 ' / in.	CHECKED -	REVISED -		
PLOT DATE = 6/26/2024	DATE -	REVISED -		SCALE: SHEET 10 OF 14 SHEETS STA. TO STA.

F.A.P. RTE.	SECTION	COUNTY	TOTAL SHEETS	SHEET NO.
804	25RS-6	CHAMPAIGN	306	27
		CONTRACT NO. 70991		
		ILLINOIS FED. AID PROJECT		

(K) EXISTING TYPICAL CROSS SECTION

STATION	TO	STATION
(J) 01+49.98		13+81.30 (L)

NOTE:
TYPICAL CROSS SECTIONS ARE SHOWN GOING FROM SOUTH TO NORTH. THE WEST SIDE IS CALLED LEFT AND THE EAST SIDE CALLED RIGHT. STATIONS INCREASE FROM SOUTH TO NORTH ON THIS TYPICAL.

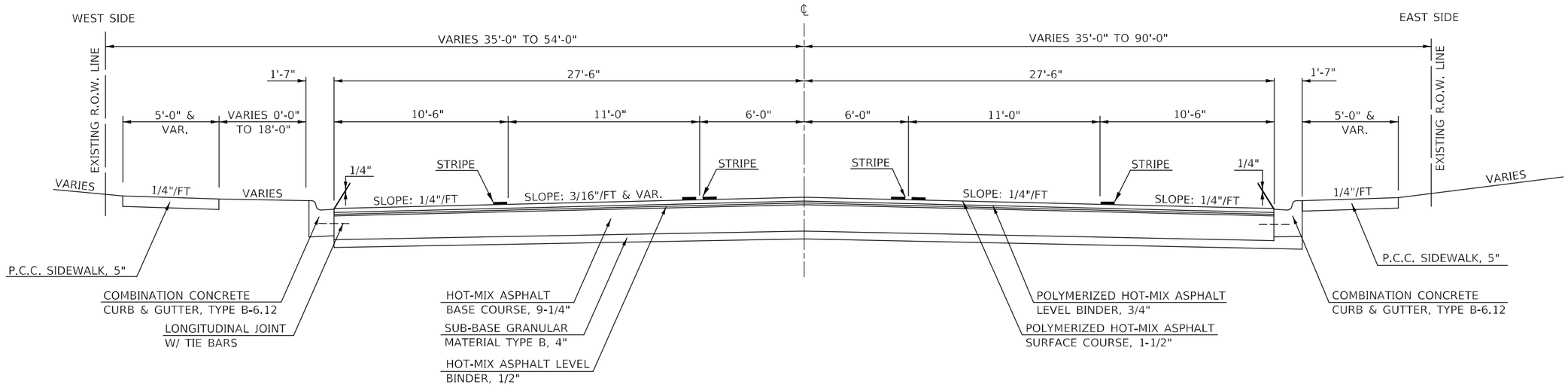

(11) PROPOSED TYPICAL CROSS SECTION

STATION	TO	STATION
(10) 01+49.98		13+81.30 (12)

NOTE:
TYPICAL CROSS SECTIONS ARE SHOWN GOING FROM SOUTH TO NORTH. THE WEST SIDE IS CALLED LEFT AND THE EAST SIDE CALLED RIGHT. STATIONS INCREASE FROM SOUTH TO NORTH ON THIS TYPICAL.

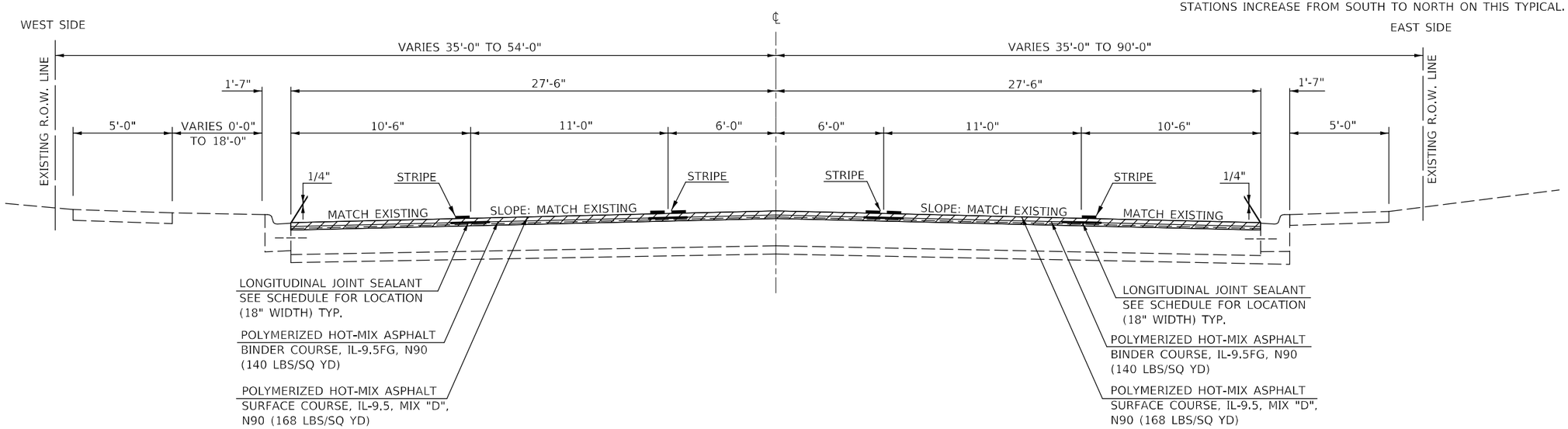

HOT-MIX ASPHALT SURFACE REMOVAL, 2-3/4"

MODEL: SMODEL NAMES
FILE NAME: pw:\\ildot-pw.bentley.com:PWIDOT\Documents\IDOT Offices\District 5\Projects\D570991\CADData\CADsheets\D570991-sht-Typical.dgn

USER NAME = Greg.Eaglin	DESIGNED -	REVISED -	STATE OF ILLINOIS DEPARTMENT OF TRANSPORTATION
	DRAWN -	REVISED -	
PLOT SCALE = 40.0000 ' / in.	CHECKED -	REVISED -	
PLOT DATE = 6/26/2024	DATE -	REVISED -	

TYPICAL CROSS SECTION

SCALE: SHEET 11 OF 14 SHEETS STA. TO STA.

F.A.P. RTE.	SECTION	COUNTY	TOTAL SHEETS	SHEET NO.
804	25RS-6	CHAMPAIGN	306	28
		CONTRACT NO. 70991		
		ILLINOIS FED. AID PROJECT		

(L) EXISTING TYPICAL CROSS SECTION

STATION EQUATIONS:
STA. 20+33.42 (BK) = STA. 20+31.70 (AH)
STA. 26+81.14 (BK) = STA. 37+10.00 (AH)

STATION	TO	STATION
(K) 13+81.30		26+81.14 (BK) (M)

NOTE:
TYPICAL CROSS SECTIONS ARE SHOWN GOING FROM SOUTH TO NORTH. THE WEST SIDE IS CALLED LEFT AND THE EAST SIDE CALLED RIGHT. STATIONS INCREASE FROM SOUTH TO NORTH ON THIS TYPICAL.

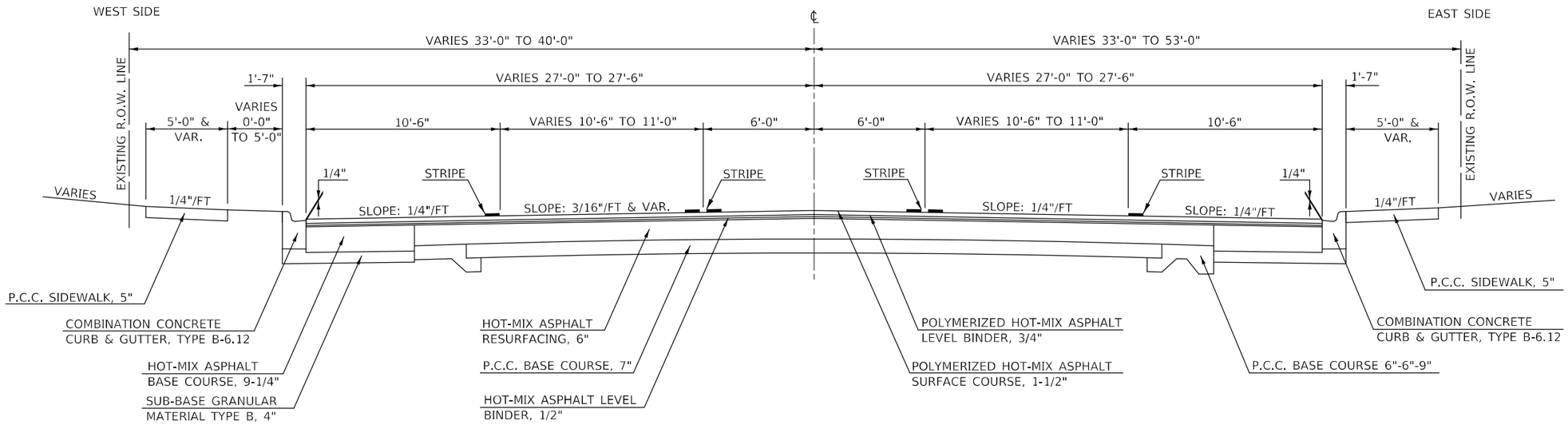

(12) PROPOSED TYPICAL CROSS SECTION

STATION EQUATIONS:
STA. 20+33.42 (BK) = STA. 20+31.70 (AH)
STA. 26+81.14 (BK) = STA. 37+10.00 (AH)

STATION	TO	STATION
(11) 13+81.30		26+81.14 (BK) (13)

NOTE:
TYPICAL CROSS SECTIONS ARE SHOWN GOING FROM SOUTH TO NORTH. THE WEST SIDE IS CALLED LEFT AND THE EAST SIDE CALLED RIGHT. STATIONS INCREASE FROM SOUTH TO NORTH ON THIS TYPICAL.

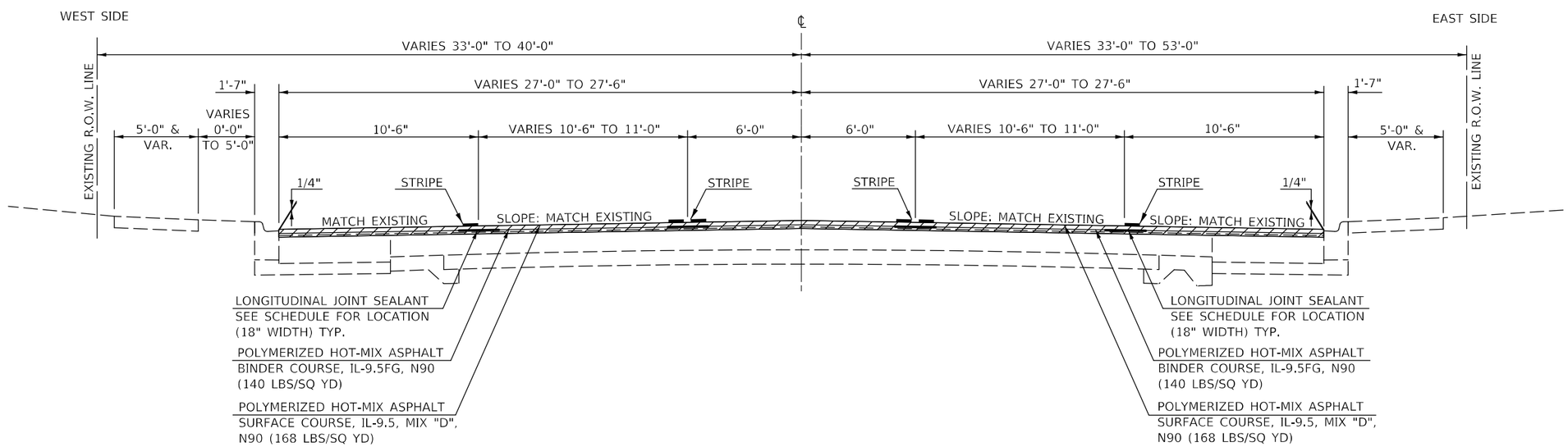

HOT-MIX ASPHALT SURFACE REMOVAL, 2-3/4"

MODEL: $MODEL NAMES
FILE NAME: pw:\\ildot-pw.bentley.com:PWIDOT\Documents\IDOT Offices\District 5\Projects\D57099\CADData\CADsheets\D57099-sht-Typical.dgn

USER NAME = Greg.Eaglin	DESIGNED -	REVISED -	
	DRAWN -	REVISED -	
PLOT SCALE = 40.0000 ' / in.	CHECKED -	REVISED -	
PLOT DATE = 6/26/2024	DATE -	REVISED -	

STATE OF ILLINOIS
DEPARTMENT OF TRANSPORTATION

TYPICAL CROSS SECTION

SCALE: | SHEET 12 OF 14 SHEETS | STA. TO STA.

F.A.P. RTE.	SECTION	COUNTY	TOTAL SHEETS	SHEET NO.
804	25RS-6	CHAMPAIGN	306	29
		CONTRACT NO. 70991		
		ILLINOIS FED. AID PROJECT		

(M) EXISTING TYPICAL CROSS SECTION

STATION EQUATION:
STA. 26+81.14 (BK) =
STA. 37+10.00 (AH)

STATION	TO	STATION
(L) 37+10.00 (AH)		48+18.00 (N)

NOTE:
TYPICAL CROSS SECTIONS ARE SHOWN GOING FROM SOUTH TO NORTH. THE WEST SIDE IS CALLED LEFT AND THE EAST SIDE CALLED RIGHT. STATIONS INCREASE FROM SOUTH TO NORTH ON THIS TYPICAL.

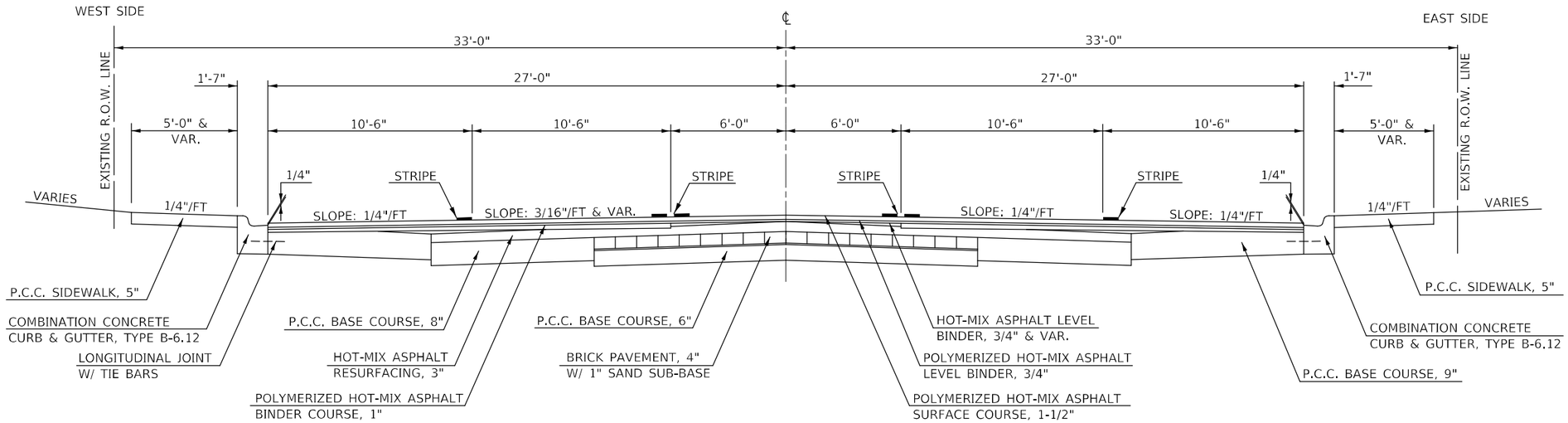

(13) PROPOSED TYPICAL CROSS SECTION

STATION EQUATION:
STA. 26+81.14 (BK) =
STA. 37+10.00 (AH)

STATION	TO	STATION
(12) 37+10.00 (AH)		48+18.00 (14)

NOTE:
TYPICAL CROSS SECTIONS ARE SHOWN GOING FROM SOUTH TO NORTH. THE WEST SIDE IS CALLED LEFT AND THE EAST SIDE CALLED RIGHT. STATIONS INCREASE FROM SOUTH TO NORTH ON THIS TYPICAL.

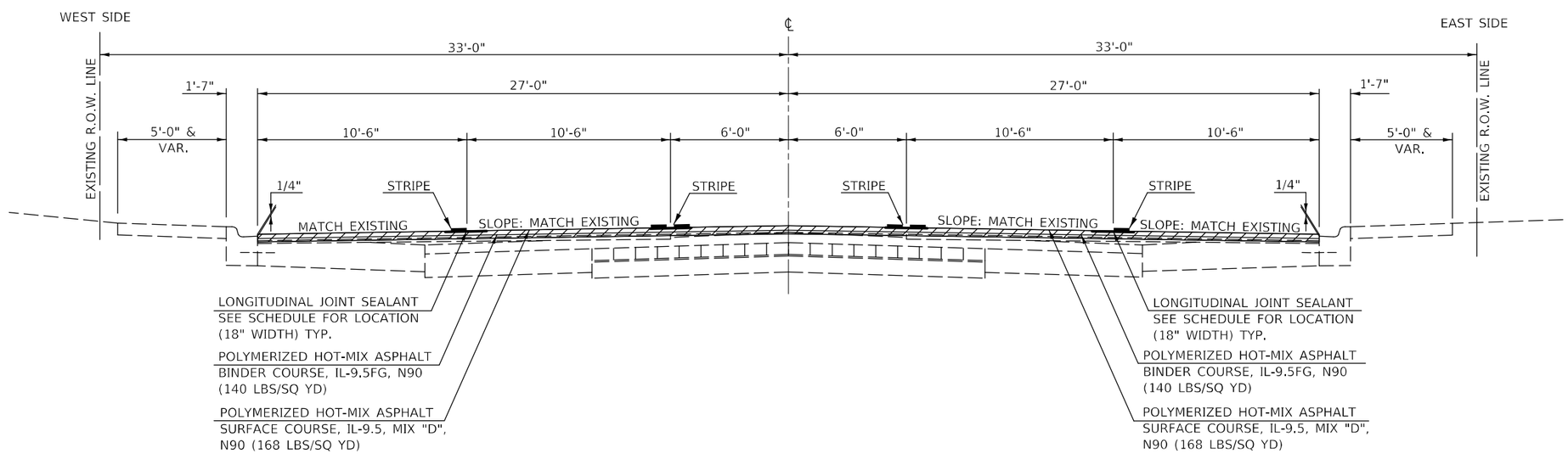

HOT-MIX ASPHALT SURFACE REMOVAL, 2-3/4"

MODEL: $MODEL$NAMES
FILE NAME: pw:\\ildot-pw.bentley.com:PWIDOT\Documents\IDOT Offices\District 5\Projects\D57099\CADData\CADsheets\D57099-sht-Typical.dgn

USER NAME = Greg.Eaglin	DESIGNED -	REVISED -	STATE OF ILLINOIS DEPARTMENT OF TRANSPORTATION	TYPICAL CROSS SECTION
	DRAWN -	REVISED -		
PLOT SCALE = 40.0000 ' / in.	CHECKED -	REVISED -		
PLOT DATE = 6/26/2024	DATE -	REVISED -		SCALE: SHEET 13 OF 14 SHEETS STA. TO STA.

F.A.P. RTE.	SECTION	COUNTY	TOTAL SHEETS	SHEET NO.
804	25RS-6	CHAMPAIGN	306	30
		CONTRACT NO. 70991		
		ILLINOIS FED. AID PROJECT		

(N) EXISTING TYPICAL CROSS SECTION

STATION	TO	STATION
(M) 48+18.00		49+00.00

NOTE:
TYPICAL CROSS SECTIONS ARE SHOWN GOING FROM SOUTH TO NORTH.
THE WEST SIDE IS CALLED LEFT AND THE EAST SIDE CALLED RIGHT.
STATIONS INCREASE FROM SOUTH TO NORTH ON THIS TYPICAL.

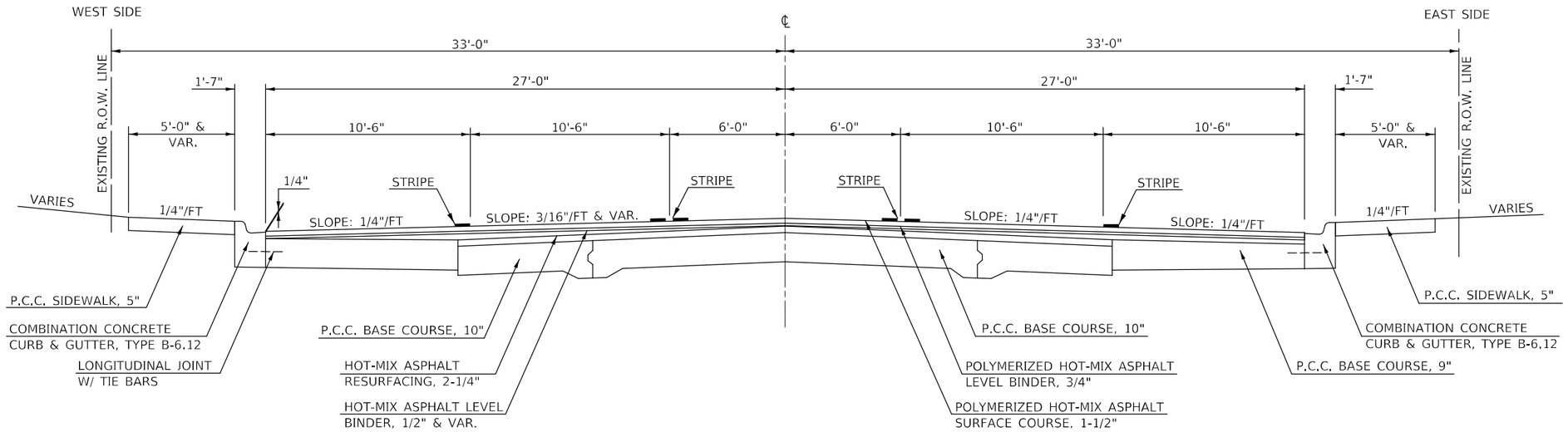

(14) PROPOSED TYPICAL CROSS SECTION

STATION	TO	STATION
(13) 48+18.00		49+00.00

NOTE:
TYPICAL CROSS SECTIONS ARE SHOWN GOING FROM SOUTH TO NORTH.
THE WEST SIDE IS CALLED LEFT AND THE EAST SIDE CALLED RIGHT.
STATIONS INCREASE FROM SOUTH TO NORTH ON THIS TYPICAL.

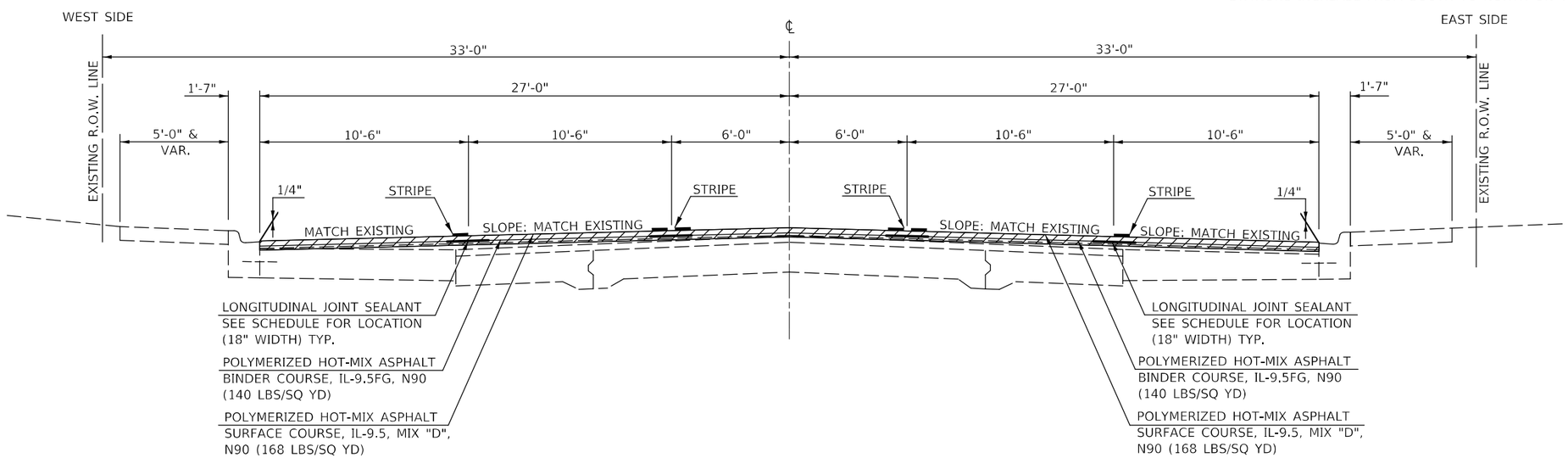

HOT-MIX ASPHALT SURFACE REMOVAL, 2-3/4"

MODEL: $MODEL$NAMES
FILE NAME: pw:\\ildot-pw.bentley.com:PWIDOT\Documents\IDOT Offices\District 5\Projects\D57099\CADData\CADsheets\D57099-sht-Typical.dgn

USER NAME = Greg.Eaglin	DESIGNED -	REVISED -	
	DRAWN -	REVISED -	
PLOT SCALE = 40.0000 ' / in.	CHECKED -	REVISED -	
PLOT DATE = 6/26/2024	DATE -	REVISED -	

STATE OF ILLINOIS
DEPARTMENT OF TRANSPORTATION

TYPICAL CROSS SECTION

SCALE: | SHEET 14 OF 14 SHEETS | STA. | TO STA.

F.A.P. RTE.	SECTION	COUNTY	TOTAL SHEETS	SHEET NO.
804	25RS-6	CHAMPAIGN	306	31

CONTRACT NO. 70991

ILLINOIS | FED. AID PROJECT

SCHEDULE OF QUANTITIES

CLASS D PATCHING SCHEDULE

LOCATION				STATION	LENGTH (FT)	WIDTH (FT)	44201789 TYPE II, 12" (SQ YD)	44201794 TYPE III, 12" (SQ YD)	44201796 TYPE IV 12" (SQ YD)	44201827 TYPE II 15" (SQ YD)	44201831 TYPE III, 15" (SQ YD)	44201833 TYPE IV, 15" (SQ YD)
US 45	LEG 'E"	N.B.	DRIVING LANE	113+00.00	100.0	12.0			133.33			
US 45	LEG 'E"	N.B.	DRIVING LANE	111+00.00	10.0	12.0	13.33					
US 45	LEG 'E"	N.B.	PASSING LANE	111+00.00	10.0	12.0	13.33					
US 45	LEG 'E"	N.B.	DRIVING LANE	107+50.00	6.0	12.0	8.00					
US 45	LEG 'E"	N.B.	PASSING LANE	107+50.00	150.0	12.0			200.00			
US 45	LEG 'E"	N.B.	DRIVING LANE	102+20.00	60.0	12.0			80.00			
US 45	LEG 'E"	N.B.	DRIVING LANE	100+00.00	30.0	12.0			40.00			
US 45	LEG 'E"	N.B.	PASSING LANE	100+00.00	120.0	12.0			160.00			
US 45	LEG 'E"	N.B.	DRIVING LANE	95+90.00	10.0	12.0	13.33					
US 45	LEG 'E"	N.B.	PASSING LANE	95+90.00	10.0	12.0	13.33					
US 45	LEG 'E"	N.B.	DRIVING LANE	92+50.00	10.0	12.0	13.33					
US 45	LEG 'E"	N.B.	PASSING LANE	92+50.00	10.0	12.0	13.33					
US 45	LEG 'E"	N.B.	PASSING LANE	84+85.00	10.0	12.0	13.33					
US 45	LEG 'E"	N.B.	DRIVING LANE	84+85.00	10.0	12.0	13.33					
US 45	LEG 'D"	N.B.	DRIVING LANE	56+55.00	10.0	12.0	13.33					
US 45	LEG 'D"	N.B.	DRIVING LANE	51+10.00	10.0	12.0	13.33					
US 45	LEG 'D"	N.B.	PASSING LANE	51+10.00	10.0	12.0	13.33					
US 45	LEG 'D"	N.B.	DRIVING LANE	44+20.00	20.0	12.0			26.67			
US 45	LEG 'D"	N.B.	PASSING LANE	44+20.00	20.0	12.0			26.67			
US 45	LEG 'D"	N.B.	DRIVING LANE	38+50.00	50.0	11.0			61.11			
US 45	LEG 'D"	N.B.	PASSING LANE	38+50.00	100.0	11.0			122.22			
US 45	LEG 'C"	N.B.	DRIVING LANE	20+25.00	25.0	11.0						30.56
US 45	LEG 'C"	N.B.	PASSING LANE	20+25.00	25.0	11.0						30.56
US 45	LEG 'C"	N.B.	DRIVING LANE	18+10.00	80.0	11.0						97.78
US 45	LEG 'C"	N.B.	PASSING LANE	18+10.00	160.0	11.0						195.56
US 45	LEG 'C"	N.B.	DRIVING LANE	13+50.00	100.0	11.0						122.22
US 45	LEG 'C"	N.B.	PASSING LANE	13+50.00	100.0	11.0						122.22
US 45	LEG 'B"	N.B.	DRIVING LANE	26+50.00	80.0	11.0						97.78
US 45	LEG 'B"	N.B.	PASSING LANE	26+50.00	80.0	11.0						97.78
US 45	LEG 'E"	S.B.	DRIVING LANE	111+00.00	10.0	12.0	13.33					
US 45	LEG 'E"	S.B.	PASSING LANE	111+00.00	10.0	12.0	13.33					
US 45	LEG 'E"	S.B.	TWLTL	111+00.00	10.0	12.0	13.33					
US 45	LEG 'E"	S.B.	DRIVING LANE	95+90.00	10.0	12.0	13.33					
US 45	LEG 'E"	S.B.	PASSING LANE	95+90.00	10.0	12.0	13.33					
US 45	LEG 'E"	S.B.	TWLTL	95+90.00	10.0	12.0	13.33					
US 45	LEG 'E"	S.B.	DRIVING LANE	94+80.00	50.0	12.0			66.67			
US 45	LEG 'E"	S.B.	DRIVING LANE	90+00.00	60.0	12.0			80.00			
US 45	LEG 'E"	S.B.	DRIVING LANE	84+85.00	10.0	12.0	13.33					
US 45	LEG 'E"	S.B.	PASSING LANE	84+85.00	10.0	12.0	13.33					
US 45	LEG 'E"	S.B.	TWLTL	84+85.00	10.0	12.0	13.33					
US 45	LEG 'D"	S.B.	DRIVING LANE	67+00.00	100.0	12.0			133.33			
US 45	LEG 'D"	S.B.	DRIVING LANE	51+10.00	10.0	12.0	13.33					
US 45	LEG 'D"	S.B.	PASSING LANE	51+10.00	10.0	12.0	13.33					
US 45	LEG 'D"	S.B.	TWLTL	51+10.00	10.0	12.0	13.33					
US 45	LEG 'D"	S.B.	DRIVING LANE	49+50.00	150.0	12.0			200.00			
US 45	LEG 'D"	S.B.	PASSING LANE	49+50.00	150.0	12.0			200.00			
US 45			MISC.		12.0	12.0		16.00				
US 45			MISC.		12.0	12.0		16.00				
US 45			MISC.		12.0	12.0		16.00				
US 45			MISC.		10.0	11.0				12.22		
US 45			MISC.		10.0	11.0				12.22		
US 45			MISC.		10.0	11.0				12.22		
US 45			MISC.		14.0	11.0					17.11	
US 45			MISC.		14.0	11.0					17.11	
US 45			MISC.		14.0	11.0					17.11	
						TOTAL =	314.67	48.00	1530.00	36.67	51.33	794.44
						USE =	315.00	48.00	1530.00	37.00	52.00	795.00
							SQ YD	SQ YD	SQ YD	SQ YD	SQ YD	SQ YD

NOTES:

THE STATIONS SHOWN FOR THE PATCHES IS GOING FROM SOUTH TO NORTH IN BOTH THE N.B. & S.B. LANES.

LEG "E" = CURTIS ROAD TO WINDSOR ROAD
LEG "D" = WINDSOR ROAD TO KIRBY AVENUE
LEG "C" = KIRBY AVENUE TO STADIUM DRIVE
LEG "B" = STADIUM DRIVE TO GREEN STREET
LEG "A" = GREEN STREET TO SPRINGFIELD AVENUE

SCHEDULE OF QUANTITIES

HOT-MIX ASPHALT SCHEDULE

LOCATION		STATION	TO	STATION	LENGTH (FT)	AVERAGE WIDTH (FT)	AREA (SQ YD)	HMA BINDER THICKNESS (INCHES)	HMA SURFACE THICKNESS (INCHES)	44000160 HMA SURFACE REMOVAL, 2-3/4" (SQ YD)	40600290 BITUMINOUS MATERIAL TACK COAT (POUND)	40603219 POLY HMA BINDER COURSE IL-9.5FG, N90 (TON)	40604164 POLY HMA SURFACE COURSE IL-9.5, MIX "D", N90 (TON)	48203008 HOT-MIX ASPHALT SHOULDERS, 2-3/4" (SQ YD)
N.B. & S.B.	US 45	134+98.00		133+35.40 (AH)	162.60	62.30	1125.00	1.25	1.5	1125.00	759.38	78.75	94.50	
N.B. & S.B.	US 45	133+35.53 (BK)		120+00.00	1335.53	64.60	9586.00	1.25	1.5	9586.00	6470.55	671.02	805.22	
N.B. & S.B.	US 45	120+00.00		110+00.00	1000.00	63.90	7100.00	1.25	1.5	7100.00	4792.50	497.00	596.40	
N.B. & S.B.	US 45	110+00.00		100+00.00	1000.00	62.00	6893.00	1.25	1.5	6893.00	4652.78	482.51	579.01	
N.B. & S.B.	US 45	100+00.00		90+00.00	1000.00	62.00	6893.00	1.25	1.5	6893.00	4652.78	482.51	579.01	
N.B. & S.B.	US 45	90+00.00		81+35.00 (AH)	865.00	64.00	6146.00	1.25	1.5	6146.00	4148.55	430.22	516.26	
N.B. & S.B.	US 45	81+35.26 (BK)		70+00.00	1135.26	62.50	7882.00	1.25	1.5	7882.00	5320.35	551.74	662.09	
N.B. & S.B.	US 45	70+00.00		60+00.00	1000.00	62.10	6904.00	1.25	1.5	6904.00	4660.20	483.28	579.94	
N.B. & S.B.	US 45	60+00.00		47+12.48 (AH)	1287.52	62.30	8911.00	1.25	1.5	8911.00	6014.93	623.77	748.52	
N.B. & S.B.	US 45	47+11.85 (BK)		43+44.41 (AH)	367.44	63.90	2607.00	1.25	1.5	2607.00	1759.73	182.49	218.99	
N.B. & S.B.	US 45	43+44.72 (BK)		26+66.47 (AH)	1678.25	59.90	11164.00	1.25	1.5	11164.00	7535.70	781.48	937.78	
N.B. & S.B.	US 45	26+72.68 (BK)		13+30.18 (AH)	1342.50	56.30	8398.00	1.25	1.5	8398.00	5668.65	587.86	705.43	
N.B. & S.B.	US 45	0+00.00 (BK)		10+00.00	1000.00	55.40	6150.00	1.25	1.5	6150.00	4151.25	430.50	516.60	
N.B. & S.B.	US 45	10+00.00		20+33.42 (BK)	1033.42	55.10	6326.00	1.25	1.5	6326.00	4270.05	442.82	531.38	
N.B. & S.B.	US 45	20+31.70 (AH)		26+81.14 (BK)	649.44	54.10	3903.00	1.25	1.5	3903.00	2634.53	273.21	327.85	
N.B. & S.B.	US 45	37+10.00 (AH)		49+00.00	1190.00	54.20	7168.00	1.25	1.5	7168.00	4838.40	501.76	602.11	
RT.	SHOULDER	134+98.00		133+43.15	193.42	4.20	89.00			89.00	60.08			89.00
RT.	SHOULDER	132+47.85		120+00.00	1247.85	9.10	1255.00			1255.00	847.13			1255.00
RT.	SHOULDER	120+00.00		110+00.00	1000.00	9.10	1008.00			1008.00	680.40			1008.00
RT.	SHOULDER	110+00.00		100+00.00	1000.00	9.10	1008.00			1008.00	680.40			1008.00
RT.	SHOULDER	100+00.00		90+00.00	1000.00	9.10	1008.00			1008.00	680.40			1008.00
RT.	SHOULDER	90+00.00		81+35.00 (AH)	865.00	8.30	800.00			800.00	540.00			800.00
RT.	SHOULDER	81+35.26 (BK)		80+81.73	53.53	4.70	28.00			28.00	18.90			28.00
RT.	SHOULDER	78+79.00		76+09.29	269.71	6.70	202.00			202.00	136.35			202.00
LT.	SHOULDER	134+98.00		134+24.00	74.00	9.50	78.00			78.00	52.65			78.00
LT.	SHOULDER	131+12.00		124+32.00	680.00	8.50	636.00			636.00	429.30			636.00
LT.	SHOULDER	122+85.00		114+92.74	792.26	9.00	796.00			796.00	537.30			796.00
LT.	SHOULDER	112+46.65		107+74.66	471.99	7.80	410.00			410.00	276.75			410.00
LT.	SHOULDER	107+18.03		95+81.89	1136.14	9.00	1138.00			1138.00	768.15			1138.00
LT.	SHOULDER	95+33.56		88+78.49	655.07	9.00	655.00			655.00	442.13			655.00
LT.	SHOULDER	88+29.77		81+35.00 (AH)	694.77	9.20	712.00			712.00	480.60			712.00
LT.	SHOULDER	81+35.26 (BK)		80+98.00	37.26	9.20	38.00			38.00	25.65			38.00
RT.	CURTIS RD. & N.B. RT. TURN LANE	133+35.53					846.00	1.25	1.5	846.00	571.05	59.22	71.06	
LT.	CURTIS RD. & S.B. RT. TURN LANE	133+35.53					990.00	1.25	1.5	990.00	668.25	69.30	83.16	
LT.	ARBOUR TOWNE PL.	123+44.00					753.00	1.25	1.5	753.00	508.28	52.71	63.25	
LT.	BURWASH AVE & S.B. RT. TURN LANE	114+58.70					577.00	1.25	1.5	577.00	389.48	40.39	48.47	
RT.	WINDSOR RD.	80+03.60					986.00	1.25	1.5	986.00	665.55	69.02	82.82	
LT.	WINDSOR RD. & S.B. RT. TURN LANE	80+03.60					1502.00	1.25	1.5	1502.00	1013.85	105.14	126.17	
LT.	KNOLLWOOD DR.	70+18.50					609.00	1.25	1.5	609.00	411.08	42.63	51.16	
LT.	DEVONSHIRE DR. & S.B. RT. TURN LANE	57+28.30					1047.00	1.25	1.5	1047.00	706.73	73.29	87.95	
LT.	FOX DR.	40+03.40					433.00	1.25	1.5	433.00	292.28	30.31	36.37	
RT.	KIRBY AVE.	26+66.47					890.00	1.25	1.5	890.00	600.75	62.30	74.76	
LT.	KIRBY AVE.	26+66.47					1038.00	1.25	1.5	1038.00	700.65	72.66	87.19	
LT.	HESSEL BLVD.	3+42.00					710.00	1.25	1.5	710.00	479.25	49.70	59.64	
RT.	STADIUM DR.	3+53.50					476.00	1.25	1.5	476.00	321.30	33.32	39.98	
LT.	GREEN ST.	41+18.60					376.00	1.25	1.5	376.00	253.80	26.32	31.58	
									TOTAL =	128250.00	86568.75	8287.23	9944.68	9861.00
									USE =	128250.00	86569.00	8288.00	9945.00	9861.00
										SQ YD	POUND	TON	TON	SQ YD

NOTE:
FOR ADDITIONAL QUANTITIES FOR PAY ITEM 40600290 SEE LONGITUDINAL JOINT SEALANT SCHEDULE.

SCHEDULE OF QUANTITIES

40600370 LONGITUDINAL JOINT SEALANT

LOCATION		STATION	TO	STATION	LENGTH (FT)	NUMBER OF LONGITUDINAL JOINTS (EACH)	40600370 LONGITUDINAL JOINT SEALANT (FT)	40600290 BITUMINOUS MATERIAL TACK COAT (POUND)
US 45	MAINLINE JOINTS	134+98.00		133+35.40 (AH)	162.60	5.0	813.00	30.49
US 45	RT. E.O.P. AT CURTIS RD.	134+16.00		133+35.40 (AH)	80.60	1.0	80.60	3.02
US 45	LT. E.O.P. AT CURTIS RD.	134+24.00		133+35.40 (AH)	88.60	1.0	88.60	3.32
US 45	S.B. RT. TURN LANE AT CURTIS RD.	134+02.00		133+35.40 (AH)	66.60	1.0	66.60	2.50
US 45	RT. E.O.P. AT CURTIS RD.	133+35.53 (BK)		132+13.00	122.53	1.0	122.53	4.59
US 45	N.B. RT TURN LANE AT CURTIS RD.	133+35.53 (BK)		132+65.00	70.53	1.0	70.53	2.64
US 45	LT. E.O.P. AT CURTIS RD.	133+35.53 (BK)		132+50.00	85.53	1.0	85.53	3.21
US 45	S.B. RT. TURN LANE TO CURTIS RD.	133+35.53 (BK)		129+82.00	353.53	1.0	353.53	13.26
US 45	MAINLINE JOINTS	133+35.53 (BK)		81+35.00 (AH)	5200.53	4.0	20802.12	780.08
US 45	S.B. RT. TURN LANE TO ARBOURE TOWNE PL.	124+32.00		117+69.00	663.00	1.0	663.00	24.86
US 45	LT. E.O.P. AT ARBOURE TOWNE PL.	124+15.00		122+85.00	130.00	1.0	130.00	4.88
US 45	S.B. RT. TURN LANE TO BURWASH AVE.	115+09.00		111+15.00	394.00	1.0	394.00	14.78
US 45	LT. E.O.P. AT BURWASH AVE.	114+86.00		113+96.00	90.00	1.0	90.00	3.38
US 45	N.B. RT. TURN LANE TO WINDSOR RD.	83+50.00		81+35.00 (AH)	215.00	1.0	215.00	8.06
US 45	MAINLINE JOINTS	81+35.26 (BK)		47+12.48 (AH)	3422.78	4.0	13691.12	513.42
US 45	N.B. RT. TURN LANE TO WINDSOR RD.	81+35.26 (BK)		78+79.00	256.26	1.0	256.26	9.61
US 45	LT. E.O.P AT WINDSOR RD.	80+98.00		74+25.00	673.00	1.0	673.00	25.24
US 45	S.B. RT. TURN LANE TO WINDSOR RD.	80+79.00		78+95.00	184.00	1.0	184.00	6.90
US 45	LT. E.O.P. AT KNOLLWOOD DR.	70+97.00		69+54.00	143.00	1.0	143.00	5.36
US 45	LT. E.O.P. AT DEVONSHIRE DR.	58+15.00		53+24.00	491.00	1.0	491.00	18.41
US 45	S.B. RT. TURN LANE TO DEVONSHIRE DR.	57+80.00		56+55.00	125.00	1.0	125.00	4.69
US 45	MAINLINE JOINTS	47+11.85 (BK)		43+44.41 (AH)	367.44	4.0	1469.76	55.12
US 45	N.B. RT. TURN LANE TO ST. MARYS RD.	43+78.00		43+44.41 (AH)	33.59	1.0	33.59	1.26
US 45	MAINLINE JOINTS	43+44.72 (BK)		26+66.47 (AH)	1678.25	4.0	6713.00	251.74
US 45	N.B. RT. TURN LANE TO ST. MARYS RD.	43+44.72 (BK)		39+54.00	390.72	1.0	390.72	14.65
US 45	LT. E.O.P. AT FOX DR.	40+79.00		39+41.00	138.00	1.0	138.00	5.18
US 45	S.B. LT. E.O.P. AT KIRBY AVE.	27+89.00		26+66.47 (AH)	122.53	1.0	122.53	4.59
US 45	N.B. RT. E.O.P. AT KIRBY AVE.	27+86.00		26+66.47 (AH)	119.53	1.0	119.53	4.48
US 45	MAINLINE JOINTS	26+68.23 (BK)		13+30.18 (AH)	1338.05	4.0	5352.20	200.71
US 45	N.B. RT. E.O.P. AT KIRBY AVE.	26+68.23 (BK)		25+69.00	99.23	1.0	99.23	3.72
US 45	S.B. RT. TURN LANE AT KIRBY AVE.	26+68.23 (BK)		23+66.00	302.23	1.0	302.23	11.33
US 45	MAINLINE JOINTS	0+00.00 (BK)		20+33.42 (BK)	2033.42	4.0	8133.68	305.01
US 45	LT. E.O.P, AT HESSEL BLVD.	1+68.00		3+70.00	202.00	1.0	202.00	7.58
US 45	RT. E.O.P. AT STADIUM DR.	3+00.00		4+41.00	141.00	1.0	141.00	5.29
US 45	MAINLINE JOINTS	20+31.70 (AH)		26+81.14 (BK)	649.44	4.0	2597.76	97.42
US 45	MAINLINE JOINTS	37+10.00 (AH)		49+00.00	1190.00	4.0	4760.00	178.50
US 45	LT. E.O.P. AT GREEN ST.	40+52.00		41+74.00	122.00	1.0	122.00	4.58
CURTIS RD. (LT.)	MAINLINE JOINTS	13+87.00		14+56.00	69.00	2.0	138.00	5.18
CURTIS RD. (RT.)	MAINLINE JOINTS	15+63.00		16+16.50	53.50	2.0	107.00	4.01
ARBOURS TOWNE PL.	MAINLINE JOINTS	0+45.00		1+19.40	74.40	1.0	74.40	2.79
ARBOURS TOWNE PL.	MAINLINE JOINTS	0+41.50		1+17.20	75.70	1.0	75.70	2.84
BURWASH AVE.	MAINLINE JOINTS	0+43.30		0+70.70	27.40	2.0	54.80	2.06
WINDSOR AVE. (RT.)	MAINLINE JOINTS	0+28.80		1+07.50	78.70	1.0	78.70	2.95
WINDSOR AVE. (RT.)	MAINLINE JOINTS	0+33.50		0+92.40	58.90	3.0	176.70	6.63
WINDSOR AVE. (LT.)	MAINLINE JOINTS	0+43.50		1+09.30	65.80	1.0	65.80	2.47
WINDSOR AVE. (LT.)	MAINLINE JOINTS	0+47.50		0+92.00	44.50	4.0	178.00	6.68
KNOLLWOOD DR. (LT.)	MAINLINE JOINTS	0+31.00		1+12.50	81.50	3.0	244.50	9.17
DEVONSHIRE DR. (LT.)	MAINLINE JOINTS	0+44.00		1+21.20	77.20	2.0	154.40	5.79
FOX DR.	MAINLINE JOINTS	0+29.10		0+91.90	62.80	2.0	125.60	4.71
KIRBY AVE. (RT.)	MAINLINE JOINTS	8+91.00		9+73.00	82.00	5.0	410.00	15.38
KIRBY AVE. (LT.)	MAINLINE JOINTS	10+33.70		11+03.00	69.30	5.0	346.50	12.99
HESSEL BLVD. (LT.)	MAINLINE JOINTS	0+36.50		1+50.30	113.80	2.0	227.60	8.54
STADIUM DR. (RT.)	MAINLINE JOINTS	0+29.00		0+96.60	67.60	2.0	135.20	5.07
GREEN ST. (LT.)	MAINLINE JOINTS	0+28.00		0+77.00	49.00	3.0	147.00	5.51
						TOTAL =	72975.55	2736.58
						USE =	72976.00	2737.00
							FT	POUND

NOTES:

LONGITUDINAL JOINT SEALANT SHALL BE USED AT ALL HMA MAINLINE PAVING JOINTS ON US 45 AND ON ALL HMA PAVING JOINTS ON CURTIS RD., ARBOURS TOWNE PL., BURWASH AVE., WINDSOR RD., KNOLLWOOD DR., DEVONSHIRE DR., FOX DR., KIRBY AVE., HESSEL BLVD., STADIUM DR., AND GREEN ST.

PRIOR TO THE PLACEMENT OF THE LONGITUDINAL JOINT SEALANT A BITUMINOUS MATERIAL TACK COAT SHALL BE APPLIED.

STATIONS SHOWN ON SIDEROADS WITHOUT CENTERLINE CONTROL ARE FOR REFERENCE ONLY.

FOR ADDITIONAL QUANTITIES FOR PAY ITEM 40600290 SEE HOT-MIX ASPHALT SCHEDULE.

SCHEDULE OF QUANTITIES

40600990 TEMPORARY RAMP

LOCATION		STATION AT CENTERLINE	TO	STATION AT CENTERLINE	DROP (INCH)	LENGTH (FT)	WIDTH (FT)	QUANTITY (SQ YD)	CONSTRUCT AFTER:
C.L.	US 45	134+98.00		134+89.00	2.75	9.00	88.00	88.00	MILLING
C.L.	US 45	134+98.00		134+89.00	1.50	5.00	88.00	48.89	BINDER
C.L.	US 45 AT WINDSOR RD.	84+09.00		84+00.00	1.25	5.00	80.00	44.44	MILLING
C.L.	US 45 AT WINDSOR RD.	84+05.00		84+00.00	1.50	5.00	80.00	44.44	BINDER
C.L.	US 45 AT KIRBY AVE.	28+09.00		28+00.00	1.25	5.00	60.00	33.33	MILLING
C.L.	US 45 AT KIRBY AVE.	28+05.00		28+00.00	1.25	5.00	60.00	33.33	BINDER
C.L.	US 45 AT HESSEL BLVD.	4+91.00		5+00.00	1.25	5.00	55.00	30.56	MILLING
C.L.	US 45 AT HESSEL BLVD.	4+95.00		5+00.00	1.25	5.00	55.00	30.56	BINDER
C.L.	US 45	48+91.00		49+00.00	2.75	9.00	55.00	55.00	MILLING
C.L.	US 45	48+95.00		49+00.00	1.50	5.00	55.00	30.56	BINDER
LT.	CURTIS RD.	13+87.00		13+96.00	2.75	9.00	40.00	40.00	MILLING
LT.	CURTIS RD.	13+87.00		13+92.00	1.50	5.00	40.00	22.22	BINDER
RT.	CURTIS RD.	16+07.50		16+16.50	2.75	9.00	40.00	40.00	MILLING
RT.	CURTIS RD.	16+11.50		16+16.50	1.50	5.00	40.00	22.22	BINDER
LT.	ARBOUR TOWNE PL	1+10.40		1+19.40	2.75	9.00	24.00	24.00	MILLING
LT.	ARBOUR TOWNE PL	1+14.40		1+19.40	1.50	5.00	24.00	13.33	BINDER
LT.	ARBOUR TOWNE PL	1+08.20		1+17.20	2.75	9.00	24.00	24.00	MILLING
LT.	ARBOUR TOWNE PL	1+12.20		1+17.20	1.50	5.00	24.00	13.33	BINDER
LT.	BURWASH AVE.	0+61.70		0+70.70	2.75	9.00	20.00	20.00	MILLING
LT.	BURWASH AVE.	0+65.70		0+70.70	1.50	5.00	20.00	11.11	BINDER
LT.	BURWASH AVE.	0+61.70		0+70.70	2.75	9.00	26.00	26.00	MILLING
LT.	BURWASH AVE.	0+65.70		0+70.70	1.50	5.00	26.00	14.44	BINDER
LT.	ARBOURS DR.	0+62.50		0+64.50	1.50	2.00	31.00	6.89	MILLING
LT.	DUNLAP CT.	0+58.20		0+60.20	1.50	2.00	23.00	5.11	MILLING
LT.	COLLEGE PARK CT.	0+60.60		0+62.60	1.50	2.00	23.00	5.11	MILLING
RT.	WINDSOR RD.	0+98.50		1+07.50	2.75	9.00	24.00	24.00	MILLING
RT.	WINDSOR RD.	1+02.50		1+07.50	1.50	5.00	24.00	13.33	BINDER
RT.	WINDSOR RD.	0+83.40		0+92.40	2.75	9.00	53.00	53.00	MILLING
RT.	WINDSOR RD.	0+87.40		0+92.40	1.50	5.00	53.00	29.44	BINDER
LT.	WINDSOR RD.	0+83.00		0+92.00	2.75	9.00	60.00	60.00	MILLING
LT.	WINDSOR RD.	0+87.00		0+92.00	1.50	5.00	60.00	33.33	BINDER
LT.	WINDSOR RD.	1+00.30		1+09.30	2.75	9.00	24.00	24.00	MILLING
LT.	WINDSOR RD.	1+04.30		1+09.30	1.50	5.00	24.00	13.33	BINDER
LT.	KNOLLWOOD DR.	1+03.50		1+12.50	2.75	9.00	46.00	46.00	MILLING
LT.	KNOLLWOOD DR.	1+07.50		1+12.50	1.50	5.00	46.00	25.56	BINDER
LT.	DEVONSHIRE R.	1+12.20		1+21.20	2.75	9.00	44.00	44.00	MILLING
LT.	DEVONSHIRE R.	1+16.20		1+21.20	1.50	5.00	44.00	24.44	BINDER
RT.	ST MARYS RD.	0+38.30		0+47.30	2.75	9.00	82.00	82.00	MILLING
RT.	ST MARYS RD.	0+42.30		0+47.30	1.50	5.00	78.00	43.33	BINDER
LT.	FOX DR.	0+82.90		0+91.90	2.75	9.00	40.00	40.00	MILLING
LT.	FOX DR.	0+86.90		0+91.90	1.50	5.00	40.00	22.22	BINDER
RT.	KIRBY AVE.	8+91.00		9+00.00	2.75	9.00	27.00	27.00	MILLING
RT.	KIRBY AVE.	8+91.00		8+96.00	1.50	5.00	27.00	15.00	BINDER
RT.	KIRBY AVE.	8+91.00		9+00.00	2.75	9.00	33.00	33.00	MILLING
RT.	KIRBY AVE.	8+91.00		8+96.00	1.50	5.00	33.00	18.33	BINDER
LT.	KIRBY AVE.	10+94.00		11+03.00	2.75	9.00	39.00	39.00	MILLING
LT.	KIRBY AVE.	10+98.00		11+03.00	1.50	5.00	39.00	21.67	BINDER
LT.	KIRBY AVE.	10+94.00		11+03.00	2.75	9.00	26.00	26.00	MILLING
LT.	KIRBY AVE.	10+98.00		11+03.00	1.50	5.00	26.00	14.44	BINDER
LT.	BIRCH ST.	0+61.40		0+63.40	1.50	2.00	26.00	5.78	MILLING
LT.	BUENA VISTA DR.	0+62.70		0+64.70	1.50	2.00	25.00	5.56	MILLING
LT.	HESSEL BLVD.	1+41.30		1+50.30	2.75	9.00	38.00	38.00	MILLING
						SUB-TOTAL 1 =		1548.67	
								SQ YD	

40600990 TEMPORARY RAMP

LOCATION		STATION AT CENTERLINE	TO	STATION AT CENTERLINE	DROP (INCH)	LENGTH (FT)	WIDTH (FT)	QUANTITY (SQ YD)	CONSTRUCT AFTER:
LT.	HESSEL BLVD.	1+45.30		1+50.30	1.50	5.00	38.00	21.11	BINDER
RT.	STADIUM DR.	0+87.60		0+96.60	2.75	9.00	42.00	42.00	MILLING
RT.	STADIUM DR.	0+91.60		0+96.60	1.50	5.00	42.00	23.33	BINDER
LT.	AVONDALE AVE.	0+81.00		0+83.00	1.50	2.00	24.00	5.33	MILLING
LT.	ELLS AVE.	0+82.00		0+84.00	1.50	2.00	24.00	5.33	MILLING
LT.	STANAGE AVE.	0+58.50		0+60.50	1.50	2.00	24.00	5.33	MILLING
LT.	CHARLES ST.	0+66.00		0+68.00	1.50	2.00	24.00	5.33	MILLING
LT.	WILLIAM ST.	0+54.40		0+56.40	1.50	2.00	24.00	5.33	MILLING
RT.	JOHN ST.	0+42.20		0+44.20	1.50	2.00	27.00	6.00	MILLING
RT.	GREEN ST.	0+22.00		0+24.00	2.75	2.00	132.00	29.33	MILLING
RT.	GREEN ST.	0+22.00		0+24.00	1.50	2.00	132.00	29.33	BINDER
LT.	GREEN ST.	0+68.00		0+77.00	2.75	9.00	54.00	54.00	MILLING
LT.	GREEN ST.	0+72.00		0+77.00	1.50	5.00	54.00	30.00	BINDER
LT.	HEALEY ST.	1+02.00		1+04.00	1.50	2.00	24.00	5.33	MILLING
	MANHOLES / 67 EACH	VARIOUS		VARIOUS	2.75	9.00	1.00	67.00	MILLING
	MANHOLES / 67 EACH	VARIOUS		VARIOUS	1.50	9.00	1.00	67.00	BINDER
						SUB-TOTAL 2 =		401.11	
								SQ YD	

	QUANTITY (SQ YD)
SUB-TOTAL 1 =	1548.67
SUB-TOTAL 2 =	401.11
TOTAL =	1949.78
USE =	1950.00
	SQ YD

NOTE:
ALONG THE US 45 MAINLINE PAVEMENT AT WINDSOR ROAD, KIRBY AVENUE, AND HESSEL BLVD, TEMPORARY RAMPS WERE INCLUDED TO TAKE INTO ACCOUNT POTENTIAL STOPPING POINTS IN THE MILLING OPERATIONS.

WITHIN THE PROJECT LIMITS THERE ARE MANHOLE FRAME & LIDS THAT WILL NEED TEMPORARY RAMPS CONSTRUCTED AROUND THEM DURING MILLING AND RESURFACING OPERATIONS.

70107025 CHANGEABLE MESSAGE SIGN

LOCATION		PUBLIC NOTIFICATION (**) (CAL DA)	TOTAL QUANTITY (CAL DA)
US 45	N.B.	7.0	7.0
US 45	S.B.	7.0	7.0
DURING CONSTRUCTION			51.0
		TOTAL =	65.0
			CAL DA

** NOTE:
SEE SPECIAL PROVISIONS FOR PUBLIC NOTIFICATION REQUIREMENTS

SCHEDULE OF QUANTITIES

20200100 EARTH EXCAVATION
20400800 FURNISHED EXCAVATION

LOCATION			20200100 EARTH EXCAVATION (NOTE C) (CU YD)	20200100 EARTH EXCAVATION (NOTE D) (CU YD)	20400800 FURNISHED EXCAVATION (CU YD)
1	CURTIS RD.	N.W. QUADRANT	3.20		2.00
2	CURTIS RD.	N.E. QUADRANT		1.40	0.80
3	CURTIS RD.	S.W. QUADRANT		2.50	1.60
4	ARBOUR TOWNE PL.	N.W. QUADRANT		2.90	0.80
5	ARBOUR TOWNE PL.	S.W. QUADRANT	2.20		1.30
6	BURWASH AVE.	N.W. QUADRANT		3.10	1.90
7	BURWASH AVE.	S.W. QUADRANT		2.90	2.50
8	ARBOURS DR.	N.W. QUADRANT	3.70		2.90
9	ARBOURS DR.	S.W. QUADRANT		3.60	2.50
10	DUNLAP CT.	N.W. QUADRANT	3.00		2.20
11	DUNLAP CT.	S.W. QUADRANT		4.00	2.80
12	COLLEGE PARK CT.	N.W. QUADRANT	2.40		1.50
13	COLLEGE PARK CT.	S.W. QUADRANT	6.30		2.80
14	WINDSOR RD.	N.W. QUADRANT		3.30	0.80
15	WINDSOR RD.	S.W. QUADRANT	2.00		0.50
16	WINDSOR RD.	S.E. QUADRANT	1.90		1.10
17	KNOLLWOOD DR.	N.W. QUADRANT	5.60		1.10
18	KNOLLWOOD DR.	S.W. QUADRANT	3.10		2.20
19	KNOLLWOOD DR.	S.E. QUADRANT	3.60		2.20
20	DEVONSHIRE DR.	N.W. QUADRANT		3.40	2.30
21	DEVONSHIRE DR.	S.W. QUADRANT	3.30		0.60
22	CARRIAGE CENTER CT.	N.W. QUADRANT	1.40		0.90
23	CARRIAGE CENTER CT.	S.W. QUADRANT		1.70	1.10
24	FOX DR.	N.W. QUADRANT	0.00		0.00
25	FOX DR.	S.W. QUADRANT	3.20		0.50
26	KIRBY AVE.	N.W. QUADRANT	5.70		1.70
27	KIRBY AVE.	N.E. QUADRANT		4.20	0.90
28	KIRBY AVE.	S.W. QUADRANT		3.20	1.00
29	KIRBY AVE.	S.E. QUADRANT	3.20		0.60
30	BIRCH ST.	N.W. QUADRANT		2.10	1.30
31	BIRCH ST.	S.W. QUADRANT		5.70	1.60
32	BUENA VISTA DR.	N.W. QUADRANT		1.90	0.50
33	BUENA VISTA DR.	S.W. QUADRANT	2.10		0.60
34A	HESSEL BLVD.	N.W. QUADRANT	5.10		1.00
34B	HESSEL BLVD.	N.W. QUADRANT		4.60	1.80
35	HESSEL BLVD.	S.W. QUADRANT		2.80	1.30
36	HESSEL BLVD. ISLAND	S.W. QUADRANT		6.00	0.00
		SUB-TOTAL 1 =	61.00	59.30	51.20
			CU YD	CU YD	CU YD

20200100 EARTH EXCAVATION (CONTINUED)
20400800 FURNISHED EXCAVATION (CONTINUED)

LOCATION			20200100 EARTH EXCAVATION (NOTE C) (CU YD)	20200100 EARTH EXCAVATION (NOTE D) (CU YD)	20400800 FURNISHED EXCAVATION (CU YD)
37	STADIUM DR.	N.E. QUADRANT		6.20	0.60
38	STADIUM DR.	S.E. QUADRANT		3.80	1.80
39	AVONDALE AVE.	N.W. QUADRANT		2.50	0.90
40	AVONDALE AVE.	S.W. QUADRANT		2.30	1.10
41	ELLS AVE.	N.W. QUADRANT	0.90		0.50
42	ELLS AVE.	S.W. QUADRANT	3.20		1.80
43	STANAGE AVE.	N.W. QUADRANT		2.80	1.20
44	STANAGE AVE.	S.W. QUADRANT	3.10		1.40
45	CHARLES ST.	N.W. QUADRANT		1.80	0.70
46	CHARLES ST.	S.W. QUADRANT		3.70	1.20
47	WILLIAM ST.	N.W. QUADRANT		3.90	1.50
48	WILLIAM ST.	S.W. QUADRANT		6.30	1.50
49	JOHN ST.	N.W. QUADRANT		2.80	0.30
50	JOHN ST.	N.E. QUADRANT		2.90	0.30
51	JOHN ST.	S.W. QUADRANT		3.00	0.40
52	JOHN ST.	S.E. QUADRANT		2.40	0.80
53	GREEN ST.	N.W. QUADRANT		3.30	0.40
54	GREEN ST.	S.W. QUADRANT		7.90	0.70
55	GREEN ST.	S.E. QUADRANT		3.40	0.40
56	HEALEY ST.	N.W. QUADRANT		4.20	1.20
57	HEALEY ST.	S.W. QUADRANT		3.50	1.20
		SUB-TOTAL 2 =	7.20	66.70	19.90
		SUB-TOTAL 1 =	61.00	59.30	51.20
		TOTAL =	68.20	126.00	71.10
		USE =	69.00	126.00	72.00
			CU YD	CU YD	CU YD

NOTES:

A) THE EARTH EXCAVATION SHOWN IS FOR C&G REPLACEMENT AND ADA RAMP RECONSTRUCTION. A DISTANCE OF 1.0 FT WAS USED BEHIND THE C&G FOR EXCAVATION AND 0.5 FT WAS USED BEYOND THE PROPOSED SIDEWALK LIMITS TO ALLOW FOR FORM WORK.

B) EARTH EXCUVATION FOR TRAFFIC SIGNAL IMPROVEMENTS IS NOT INCLUDED IN THIS SCHEDULE. THIS EXCAVATED MATERIAL IS CONSIDERED NON-USEABLE AND WILL NOT BE USED FOR FURNISHED EXCAVATION. THE EXCAVATED MATERIAL SHALL BE DISPOSED OF PER THE SPECIAL PROVISIONS FOR REMOVAL AND DISPOSAL OF REGULATED SUBSTANCES.

C) THIS WORK SHALL BE ACCORDING TO ARTICLE 202.03 OF THE STANDARD SPECIFICATIONS.

D) THIS WORK SHALL BE ACCORDING TO ARTICLE 669.09(a)(1) or 669.09(a)(5) OF THE STANDARD SPECIFICATIONS PER THE REQUIREMENTS SHOWN IN THE SPECIAL PROVISION FOR REMOVAL AND DISPOSAL OF REGULATED SUBSTANCES.

INLET AND STORM SEWER SCHEDULE

LOCATION			STATION	OFFSET	(FT)	550A0050 STORM SEWERS, CLASS A, TYPE 1, 12" (FT)	60500090 REMOVING INLETS TO MAINTAIN FLOW (EACH)	60236800 INLETS, TYPE A, TYPE 11 FRAME & GRATE (EACH)	54248510 CONCRETE COLLAR (CU YD)	20800150 TRENCH BACKFILL (CU YD)	44201373 CLASS C PATCHES, TYPE I, 12" (SQ YD)	ELEVATION TOP OF GRATE AT EOP (+/-)	ELEVATION TOP OF MASONRY (+/-)	ELEVATION USFL INVERT (+/-)	DEPTH OF INLET (FT)
52	JOHN ST.	S.E. QUADRANT	26+14.00	RT.	28.12	6.0		1.0		2.0	4.0	731.6	730.7	727.9	3.0
52	JOHN ST.	S.E. QUADRANT	26+20.23	RT.	28.24		1.0		0.25						
53	GREEN ST.	N.W. QUADRANT	41+67.00	LT.	32.32	6.0		1.0		2.0	4.0	733.00	732.17	729.34	3.0
53	GREEN ST.	N.W. QUADRANT	41+62.26	LT.	35.35		1.0		0.25						
				TOTAL =		12.00	2.00	2.00	0.50	4.00	8.00				
						FT	EACH	EACH	CU YD	CU YD	SQ YD				

NOTE:
A CLASS C PATCH IS CALCULATED TO REPLACE THE PAVEMENT DURING INLET AND STORM SEWER IMPROVEMENTS.
THE PATCH WILL BE USED ALONG THE EDGE OF PAVEMENT AND IS CALCULATED AT A SIZE OF 3' X 12'.

SCHEDULE OF QUANTITIES

(ADA) PEDESTRIAN RAMP SCHEDULE

	LOCATION		44000500 COMBINATION CURB & GUTTER REMOVAL (FT)	44000600 SIDEWALK REMOVAL (SQ FT)	44000200 DRIVEWAY PAVEMENT REMOVAL (SQ YD)	60603800 COMBINATION CONCRETE CURB & GUTTER TYPE B-6.12 (FT)	60604400 COMBINATION CONCRETE CURB & GUTTER TYPE B-6.18 (FT)	60605000 COMBINATION CONCRETE CURB & GUTTER TYPE B-6.24 (FT)	42400200 PORTLAND CEMENT CONCRETE SIDEWALK, 5" (SQ FT)	42300200 PCC DRIVEWAY PAVEMENT, 6" (SQ YD)	42400800 DETECTABLE WARNINGS (SQ FT)	60300105 FRAMES AND GRATES TO BE ADJUSTED (EACH)	60600605 CONCRETE CURB,TYPE B (FT)	X6061005 CONCRETE CURB, TYPE B (SPECIAL) (FT)
1	CURTIS RD.	N.W. QUADRANT	25.0	342.0				25.0	324.0		12.0			
2	CURTIS RD.	N.E. QUADRANT	17.0	106.0				17.0	110.0		10.0			
3	CURTIS RD.	S.W. QUADRANT	36.0	135.0				36.0	101.0		12.0			
4	ARBOUR TOWNE PL.	N.W. QUADRANT	38.0	119.0		38.0			127.0		19.0			
5	ARBOUR TOWNE PL.	S.W. QUADRANT	23.0	161.0		23.0			173.0		18.0			
6	BURWASH AVE.	N.W. QUADRANT	15.0	262.0				15.0	285.0		10.0			
7	BURWASH AVE.	S.W. QUADRANT	28.0	226.0				28.0	255.0		10.0			
8	ARBOURS DR.	N.W. QUADRANT	30.0	211.0				30.0	232.0		11.0			
9	ARBOURS DR.	S.W. QUADRANT	29.0	202.0				29.0	227.0		10.0			
10	DUNLAP CT.	N.W. QUADRANT	26.0	214.0				26.0	232.0		10.0			
11	DUNLAP CT.	S.W. QUADRANT	32.0	267.0				32.0	292.0		10.0			
12	COLLEGE PARK CT.	N.W. QUADRANT	33.0	153.0				33.0	159.0		16.0	1.0		
13	COLLEGE PARK CT.	S.W. QUADRANT	35.0	296.0	1.0			35.0	342.0		16.0	1.0		
14	WINDSOR RD.	N.W. QUADRANT	23.0	368.0				23.0	386.0		12.0			
15	WINDSOR RD.	S.W. QUADRANT	21.0	236.0		21.0			243.0		12.0			
16	WINDSOR RD.	S.E. QUADRANT	19.0	291.0				19.0	253.0		12.0			
17	KNOLLWOOD DR.	N.W. QUADRANT	55.0	392.0				55.0	381.0		11.0	1.0		
18	KNOLLWOOD DR.	S.W. QUADRANT	34.0	515.0				34.0	474.0		16.0	1.0		36.0
19	KNOLLWOOD DR.	S.E. QUADRANT	22.0	170.0	10.0			22.0	186.0	10.0	20.0			
20	DEVONSHIRE DR.	N.W. QUADRANT	43.0	213.0				43.0	214.0		16.0	1.0		
21	DEVONSHIRE DR.	S.W. QUADRANT	40.0	346.0				40.0	341.0		19.0			
22	CARRIAGE CENTER CT.	N.W. QUADRANT	20.0	100.0	73.0			20.0	105.0	74.0	10.0			
23	CARRIAGE CENTER CT.	S.W. QUADRANT	26.0	169.0				26.0	177.0		10.0	1.0		
24	FOX DR.	N.W. QUADRANT		34.0					34.0					
25	FOX DR.	S.W. QUADRANT	43.0	204.0				43.0	212.0		12.0	1.0		
26	KIRBY AVE.	N.W. QUADRANT	22.0	364.0		22.0			380.0		18.0			
27	KIRBY AVE.	N.E. QUADRANT	55.0	342.0		55.0			323.0		16.0			
28	KIRBY AVE.	S.W. QUADRANT	15.0	288.0		15.0			383.0		16.0			
29	KIRBY AVE.	S.E. QUADRANT	35.0	208.0		35.0			208.0		16.0			
30	BIRCH ST.	N.W. QUADRANT	20.0	158.0		20.0			161.0		9.0	1.0		
31	BIRCH ST.	S.W. QUADRANT	53.0	265.0	2.0	53.0			317.0		28.0			
32	BUENA VISTA DR.	N.W. QUADRANT	24.0	154.0		24.0			157.0		20.0			
33	BUENA VISTA DR.	S.W. QUADRANT	20.0	324.0		20.0			308.0		10.0			
34A	HESSEL BLVD.	N.W. QUADRANT	50.0	248.0		50.0			298.0		16.0	1.0		
34B	HESSEL BLVD.	N.W. QUADRANT	53.0	241.0		53.0			260.0		16.0			
35	HESSEL BLVD.	S.W. QUADRANT	17.0	234.0		17.0			260.0		14.0			
36	HESSEL BLVD. ISLAND	S.W. QUADRANT	SEE ISLAND SCHEDULE FOR QUANTITIES AT LOCATION 36											
37	STADIUM DR.	N.E. QUADRANT	76.0	456.0		76.0			474.0		20.0			
38	STADIUM DR.	S.E. QUADRANT	32.0	361.0		32.0			425.0		38.0			
39	AVONDALE AVE.	N.W. QUADRANT	12.0	170.0		12.0			175.0		9.0			
40	AVONDALE AVE.	S.W. QUADRANT	16.0	223.0		16.0			239.0		10.0			
41	ELLS AVE.	N.W. QUADRANT	11.0	104.0		11.0			104.0		10.0			
42	ELLS AVE.	S.W. QUADRANT	25.0	232.0		25.0			256.0		10.0	1.0		
43	STANAGE AVE.	N.W. QUADRANT	47.0	214.0		47.0			214.0		15.0	1.0	30.0	
44	STANAGE AVE.	S.W. QUADRANT	19.0	225.0		19.0			252.0		12.0			
45	CHARLES ST.	N.W. QUADRANT	14.0	211.0		14.0			209.0		14.0			
46	CHARLES ST.	S.W. QUADRANT	15.0	270.0		15.0			302.0		13.0			
47	WILLIAM ST.	N.W. QUADRANT	53.0	257.0		53.0			258.0		17.0	2.0		19.0
48	WILLIAM ST.	S.W. QUADRANT	64.0	389.0		64.0			376.0		22.0	1.0		36.0
49	JOHN ST.	N.W. QUADRANT	29.0	225.0			29.0		235.0		10.0	2.0		
50	JOHN ST.	N.E. QUADRANT	44.0	131.0		44.0			130.0		19.0	1.0		
51	JOHN ST.	S.W. QUADRANT	36.0	300.0			36.0		306.0		10.0	1.0		
52	JOHN ST.	S.E. QUADRANT	41.0	117.0		41.0			128.0		20.0			
53	GREEN ST.	N.W. QUADRANT	46.0	169.0		46.0			180.0		13.0	1.0		
54	GREEN ST.	S.W. QUADRANT	82.0	704.0		82.0			650.0		26.0	1.0		62.0
55	GREEN ST.	S.E. QUADRANT	55.0	502.0			55.0		480.0		22.0	2.0		43.0
56	HEALEY ST.	N.W. QUADRANT	52.0	260.0		52.0			254.0		19.0		43.0	
57	HEALEY ST.	S.W. QUADRANT	48.0	259.0		48.0			253.0		15.0			
		TOTAL =	1894.0	14337.0	86.0	1143.0	120.0	631.0	14820.0	84.0	837.0	22.0	73.0	196.0
			FT	SQ FT	SQ YD	FT	FT	FT	SQ FT	SQ YD	SQ FT	EACH	FT	FT

NOTE:
FOR ADDITIONAL QUANTITIES FOR PAY ITEM 44000500 AND 42400800, SEE HESSEL BLVD. ISLAND SCHEDULE.

SCHEDULE OF QUANTITIES

HESSEL BLVD. ISLAND SCHEDULE

LOCATION			STATION	OFFSET (FT)		44000500 COMBINATION CURB & GUTTER REMOVAL (FT)	X4402020 CONCRETE MEDIAN SURFACE REMOVAL (SQ FT)	44000100 PAVEMENT REMOVAL (SQ YD)	35300700 PCC BASE COURSE, 12" (SQ YD)	42400800 DETECTABLE WARNING (SQ FT)	X6061702 CONCRETE MEDIAN TYPE SM (DOWELLED) (SQ FT)
36	HESSEL BLVD ISLAND	S.W. QUADRANT	2+67.38	LT.	39.1	54.0	132.0	60.0	82.0	50.0	252.0
				TOTAL =		54.0	132.0	60.0	82.0	50.0	252.0
						FT	SQ FT	SQ YD	SQ YD	SQ FT	SQ FT

NOTE:
FOR ADDITIONAL QUANTITIES FOR PAY ITEM 44000500 AND 42400800, SEE (ADA) PEDESTRIAN RAMP SCHEDULE.

INCIDENTAL HOT-MIX ASPHALT SCHEDULE

STATION		DESCRIPTION	AREA (SQ YD)	INCIDENTAL HMA THICKNESS (INCHES)	X4400196 HMA SURFACE REMOVAL, SPECIAL (SQ YD)	40800029 BITUMINOUS MATERIALS TACK COAT (POUND)	40800050 INCIDENTAL HMA SURFACING (TON)	COMMENTS
LT.	107+48.00	ARBOURS DR.	152.00	1.50	152.00	68.40	12.77	64.5 FT FROM C.L.
LT.	95+58.50	DUNLAP CT.	112.00	1.50	112.00	50.40	9.41	60.2 FT FROM C.L.
LT.	88+55.20	COLLEGE PARK CT.	120.00	1.50	120.00	54.00	10.08	62.6 FT FROM C.L.
LT.	20+02.50	BIRCH STREET	144.00	1.50	144.00	64.80	12.10	63.4 FT FROM C.L.
LT.	15+12.80	BUENA VISTA DR.	149.00	1.50	149.00	67.05	12.52	64.7 FT FROM C.L.
LT.	6+34.30	AVONDALE AVE.	197.00	1.50	197.00	88.65	16.55	83.0 FT FROM C.L.
LT.	8+95.30	ELLS AVE.	197.00	1.50	197.00	88.65	16.55	84.0 FT FROM C.L.
LT.	11+87.00	STANAGE AVE.	136.00	1.50	136.00	61.20	11.42	60.5 FT FROM C.L.
LT.	N.W. QUAD	STANAGE AVE.	18.00	1.50	18.00	8.10	1.51	ADA RAMP #43
LT.	15+12.50	CHARLES ST.	151.00	1.50	151.00	67.95	12.68	68.0 FT FROM C.L.
LT.	18+60.20	WILLIAM ST.	120.00	1.50	120.00	54.00	10.08	56.4 FT FROM C.L.
RT.	26+51.40	JOHN ST.	62.00	1.50	62.00	27.90	5.21	44.2 FT FROM C.L.
LT.	N.W. QUAD	HEALEY ST.	18.00	1.50	18.00	8.10	1.51	ADA RAMP #56
LT.	S.W. QUAD	HEALEY ST.	5.00	1.50	5.00	2.25	0.42	ADA RAMP #57
LT.	46+53.10	HEALY ST.	238.00	1.50	238.00	107.10	19.99	104.0 FT FROM C.L.
				TOTAL =	1819.00	818.55	152.80	
				USE =	1819.00	819.00	153.00	
					SQ YD	POUND	TON	

48102100 AGGREGATE WEDGE SHOULDER, TYPE B

LOCATION		STATION	TO	STATION	LENGTH (FT)	WIDTH (FT)	AVE. DEPTH (INCHES)	48102100 QUANTITY TON
US 45	RT.	134+98.00		133+43.00	194.00	2.00	1.50	3.23
US 45	RT.	132+48.00		81+35.00 (AH)	5113.00	2.00	1.50	85.22
US 45	RT.	81+35.26 (BK)		80+81.50	53.76	2.00	1.50	0.90
							TOTAL =	89.35
							USE =	90.00
								TON

SCHEDULE OF QUANTITIES

70300100 SHORT TERM PAVEMENT MARKING

70300150 SHORT TERM PAVEMENT MARKING REMOVAL

LOCATION				STATION	TO	STATION	70300100 QUANTITY (FT)	APPLY AFTER	COLOR	70300150 QUANTITY (SQ FT)
N.B.	RT.	US 45	SKIP DASH	134+98.00		133+86.00	36.00	MILLING, BINDER, SURFACE	WHITE	4.00
N.B.	LT.	US 45	SKIP DASH	134+98.00		133+84.00	36.00	MILLING, BINDER, SURFACE	WHITE	4.00
N.B.	RT.	US 45	RT. TURN LANE	134+98.00		133+86.00	36.00	MILLING, BINDER, SURFACE	WHITE	4.00
N.B.	RT.	US 45	LT. TURN LANE	134+98.00		133+86.00	36.00	MILLING, BINDER, SURFACE	WHITE	4.00
N.B.	RT.	US 45	MEDIAN	134+98.00		133+86.00	72.00	MILLING, BINDER, SURFACE	YELLOW	8.00
N.B.	RT.	US 45	SKIP DASH	132+76.00		123+93.00	288.00	MILLING, BINDER, SURFACE	WHITE	32.00
N.B.	LT.	US 45	SKIP DASH	132+74.00		123+91.00	288.00	MILLING, BINDER, SURFACE	WHITE	32.00
N.B.	RT.	US 45	MEDIAN	132+74.00		130+96.00	120.00	MILLING, BINDER, SURFACE	YELLOW	13.33
N.B.	RT.	US 45	TWLTL - SOLID	130+96.00		125+81.00	312.00	MILLING, BINDER, SURFACE	YELLOW	34.67
N.B.	LT.	US 45	TWLTL - SOLID	130+96.00		125+81.00	312.00	MILLING, BINDER, SURFACE	YELLOW	34.67
N.B.	LT.	US 45	MEDIAN	125+81.00		123+93.00	120.00	MILLING, BINDER, SURFACE	YELLOW	13.33
N.B.	LT.	US 45	LT. TURN LANE	132+74.00		131+76.00	36.00	MILLING, BINDER, SURFACE	WHITE	4.00
N.B.	LT.	US 45	RT. TURN LANE	132+74.00		131+46.00	48.00	MILLING, BINDER, SURFACE	WHITE	5.33
N.B.	RT.	US 45	LT. TURN LANE	125+21.00		123+93.00	48.00	MILLING, BINDER, SURFACE	WHITE	5.33
N.B.	RT.	US 45	SKIP DASH	122+85.00		115+11.00	252.00	MILLING, BINDER, SURFACE	WHITE	28.00
N.B.	LT.	US 45	SKIP DASH	122+83.00		115+09.00	252.00	MILLING, BINDER, SURFACE	WHITE	28.00
N.B.	LT.	US 45	RT. TURN LANE	122+83.00		119+20.00	120.00	MILLING, BINDER, SURFACE	WHITE	13.33
N.B.	RT.	US 45	TWLTL - SOLID	122+83.00		116+69.00	384.00	MILLING, BINDER, SURFACE	YELLOW	42.67
N.B.	LT.	US 45	TWLTL - SOLID	122+83.00		116+69.00	384.00	MILLING, BINDER, SURFACE	YELLOW	42.67
N.B.	LT.	US 45	MEDIAN	116+69.00		115+11.00	96.00	MILLING, BINDER, SURFACE	YELLOW	10.67
N.B.	RT.	US 45	LT. TURN LANE	116+09.00		115+11.00	36.00	MILLING, BINDER, SURFACE	WHITE	4.00
N.B.	RT.	US 45	SKIP DASH	113+96.00		107+48.00	204.00	MILLING, BINDER, SURFACE	WHITE	22.67
N.B.	LT.	US 45	SKIP DASH	113+94.00		107+48.00	204.00	MILLING, BINDER, SURFACE	WHITE	22.67
N.B.	RT.	US 45	TWLTL - SOLID	113+94.00		107+92.00	408.00	MILLING, BINDER, SURFACE	YELLOW	45.33
N.B.	LT.	US 45	TWLTL - SOLID	113+94.00		107+92.00	408.00	MILLING, BINDER, SURFACE	YELLOW	45.33
N.B.	LT.	US 45	RT. TURN LANE	113+94.00		112+88.00	36.00	MILLING, BINDER, SURFACE	WHITE	4.00
N.B.	RT.	US 45	SKIP DASH	107+48.00		95+58.50	372.00	MILLING, BINDER, SURFACE	WHITE	41.33
N.B.	LT.	US 45	SKIP DASH	107+48.00		95+58.50	372.00	MILLING, BINDER, SURFACE	WHITE	41.33
N.B.	RT.	US 45	TWLTL - SOLID	107+00.00		95+93.00	696.00	MILLING, BINDER, SURFACE	YELLOW	77.33
N.B.	LT.	US 45	TWLTL - SOLID	107+00.00		95+93.00	696.00	MILLING, BINDER, SURFACE	YELLOW	77.33
N.B.	RT.	US 45	SKIP DASH	95+58.50		88+55.20	216.00	MILLING, BINDER, SURFACE	WHITE	24.00
N.B.	LT.	US 45	SKIP DASH	95+58.50		88+55.20	216.00	MILLING, BINDER, SURFACE	WHITE	24.00
N.B.	RT.	US 45	TWLTL - SOLID	95+21.00		88+90.00	408.00	MILLING, BINDER, SURFACE	YELLOW	45.33
N.B.	LT.	US 45	TWLTL - SOLID	95+21.00		88+90.00	408.00	MILLING, BINDER, SURFACE	YELLOW	45.33
N.B.	RT.	US 45	SKIP DASH	88+55.20		81+35.00 (AH)	228.00	MILLING, BINDER, SURFACE	WHITE	25.33
N.B.	LT.	US 45	SKIP DASH	88+55.20		81+35.00 (AH)	228.00	MILLING, BINDER, SURFACE	WHITE	25.33
N.B.	RT.	US 45	SKIP DASH	81+35.26 (BK)		80+78.00	24.00	MILLING, BINDER, SURFACE	WHITE	2.67
N.B.	LT.	US 45	SKIP DASH	81+35.26 (BK)		80+76.00	24.00	MILLING, BINDER, SURFACE	WHITE	2.67
N.B.	RT.	US 45	TWLTL - SOLID	88+18.00		84+06.00	264.00	MILLING, BINDER, SURFACE	YELLOW	29.33
N.B.	LT.	US 45	TWLTL - SOLID	88+18.00		84+06.00	264.00	MILLING, BINDER, SURFACE	YELLOW	29.33
N.B.	LT.	US 45	MEDIAN	84+06.00		81+35.00 (AH)	168.00	MILLING, BINDER, SURFACE	YELLOW	18.67
N.B.	LT.	US 45	MEDIAN	81+35.26 (BK)		80+78.00	48.00	MILLING, BINDER, SURFACE	YELLOW	5.33
N.B.	RT.	US 45	LT. TURN LANE	82+66.00		81+35.00 (AH)	48.00	MILLING, BINDER, SURFACE	WHITE	5.33
N.B.	RT.	US 45	LT. TURN LANE	81+35.26 (BK)		80+78.00	24.00	MILLING, BINDER, SURFACE	WHITE	2.67
N.B.	RT.	US 45	RT. TURN LANE	81+94.00		81+35.00 (AH)	24.00	MILLING, BINDER, SURFACE	WHITE	2.67
N.B.	RT.	US 45	RT. TURN LANE	81+35.26 (BK)		80+78.00	24.00	MILLING, BINDER, SURFACE	WHITE	2.67
N.B.	RT.	US 45	SKIP DASH	79+33.00		70+72.00	276.00	MILLING, BINDER, SURFACE	WHITE	30.67
N.B.	LT.	US 45	SKIP DASH	79+31.00		70+70.00	276.00	MILLING, BINDER, SURFACE	WHITE	30.67
N.B.	RT.	US 45	MEDIAN	79+31.00		75+64.00	240.00	MILLING, BINDER, SURFACE	YELLOW	26.67
N.B.	LT.	US 45	LT. TURN LANE	79+31.00		77+14.00	72.00	MILLING, BINDER, SURFACE	WHITE	8.00
N.B.	LT.	US 45	RT. TURN LANE	79+31.00		75+78.00	108.00	MILLING, BINDER, SURFACE	WHITE	12.00
N.B.	RT.	US 45	TWLTL - SOLID	75+64.00		72+30.00	216.00	MILLING, BINDER, SURFACE	YELLOW	24.00
N.B.	LT.	US 45	TWLTL - SOLID	75+64.00		72+30.00	216.00	MILLING, BINDER, SURFACE	YELLOW	24.00
N.B.	LT.	US 45	MEDIAN	72+30.00		70+72.00	120.00	MILLING, BINDER, SURFACE	YELLOW	13.33
N.B.	RT.	US 45	LT. TURN LANE	71+70.00		70+72.00	36.00	MILLING, BINDER, SURFACE	WHITE	4.00
N.B.	RT.	US 45	SKIP DASH	69+62.00		58+16.00	360.00	MILLING, BINDER, SURFACE	WHITE	40.00
N.B.	LT.	US 45	SKIP DASH	69+60.00		58+14.00	360.00	MILLING, BINDER, SURFACE	WHITE	40.00
N.B.	RT.	US 45	MEDIAN	69+60.00		68+02.00	96.00	MILLING, BINDER, SURFACE	YELLOW	10.67
N.B.	LT.	US 45	LT. TURN LANE	69+60.00		68+62.00	36.00	MILLING, BINDER, SURFACE	WHITE	4.00
N.B.	RT.	US 45	TWLTL - SOLID	68+02.00		59+74.00	504.00	MILLING, BINDER, SURFACE	YELLOW	56.00
N.B.	LT.	US 45	TWLTL - SOLID	68+10.00		59+74.00	504.00	MILLING, BINDER, SURFACE	YELLOW	56.00
					SUB-TOTAL 1 =		12744.00		SUB-TOTAL 1 =	1416.00
							FT			SQ FT

MODEL: $MODELNAME
FILE NAME: pw:\\ildot-pw.bentley.com:PWIDOT\Documents\IDOT Offices\District 5\Projects\D57099\CADData\CADsheets\D57099-sht-Schedule.dgn

USER NAME = Greg.Eaglin	DESIGNED -	REVISED -	
	DRAWN -	REVISED -	
PLOT SCALE = 40.0000 ' / in.	CHECKED -	REVISED -	
PLOT DATE = 6/26/2024	DATE -	REVISED -	

STATE OF ILLINOIS
DEPARTMENT OF TRANSPORTATION

SCHEDULE OF QUANTITIES

SCALE: | SHEET 8 OF 24 SHEETS | STA. TO STA.

F.A.P. RTE.	SECTION	COUNTY	TOTAL SHEETS	SHEET NO.
804	25RS-6	CHAMPAIGN	306	39

CONTRACT NO. 70991

ILLINOIS | FED. AID PROJECT

SCHEDULE OF QUANTITIES

70300100 SHORT TERM PAVEMENT MARKING, (CONTINUED)

70300150 SHORT TERM PAVEMENT MARKING REMOVAL, (CONTINUED)

LOCATION				STATION	TO	STATION	70300100 QUANTITY (FT)	APPLY AFTER	COLOR	70300150 QUANTITY (SQ FT)
N.B.	LT.	US 45	MEDIAN	59+74.00		58+16.00	120.00	MILLING, BINDER, SURFACE	YELLOW	13.33
N.B.	RT.	US 45	LT. TURN LANE	59+14.00		58+16.00	36.00	MILLING, BINDER, SURFACE	WHITE	4.00
N.B.	RT.	US 45	SKIP DASH	56+78.00		51+72.20	156.00	MILLING, BINDER, SURFACE	WHITE	17.33
N.B.	LT.	US 45	SKIP DASH	56+76.00		51+72.20	156.00	MILLING, BINDER, SURFACE	WHITE	17.33
N.B.	RT.	US 45	MEDIAN	56+76.00		55+18.00	96.00	MILLING, BINDER, SURFACE	YELLOW	10.67
N.B.	LT.	US 45	LT. TURN LANE	56+76.00		55+78.00	36.00	MILLING, BINDER, SURFACE	WHITE	4.00
N.B.	LT.	US 45	RT. TURN LANE	56+76.00		54+92.00	60.00	MILLING, BINDER, SURFACE	WHITE	6.67
N.B.	RT.	US 45	TWLTL - SOLID	55+18.00		52+14.00	216.00	MILLING, BINDER, SURFACE	YELLOW	24.00
N.B.	LT.	US 45	TWLTL - SOLID	55+18.00		52+14.00	216.00	MILLING, BINDER, SURFACE	YELLOW	24.00
N.B.	RT.	US 45	SKIP DASH	51+72.20		47+12.48 (AH)	144.00	MILLING, BINDER, SURFACE	WHITE	16.00
N.B.	LT.	US 45	SKIP DASH	51+72.20		47+12.48 (AH)	144.00	MILLING, BINDER, SURFACE	WHITE	16.00
N.B.	RT.	US 45	SKIP DASH	47+11.85 (BK)		46+05.00	36.00	MILLING, BINDER, SURFACE	WHITE	4.00
N.B.	LT.	US 45	SKIP DASH	47+11.85 (BK)		46+05.00	36.00	MILLING, BINDER, SURFACE	WHITE	4.00
N.B.	RT.	US 45	TWLTL - SOLID	51+18.00		47+12.48 (AH)	264.00	MILLING, BINDER, SURFACE	YELLOW	29.33
N.B.	LT.	US 45	TWLTL - SOLID	51+18.00		47+12.48 (AH)	264.00	MILLING, BINDER, SURFACE	YELLOW	29.33
N.B.	RT.	US 45	TWLTL - SOLID	47+11.85 (BK)		46+42.00	72.00	MILLING, BINDER, SURFACE	YELLOW	8.00
N.B.	LT.	US 45	TWLTL - SOLID	47+11.85 (BK)		46+42.00	72.00	MILLING, BINDER, SURFACE	YELLOW	8.00
N.B.	RT.	US 45	SKIP DASH	46+05.00		43+44.41 (AH)	84.00	MILLING, BINDER, SURFACE	WHITE	9.33
N.B.	LT.	US 45	SKIP DASH	46+05.00		43+44.41 (AH)	84.00	MILLING, BINDER, SURFACE	WHITE	9.33
N.B.	RT.	US 45	SKIP DASH	43+44.72 (BK)		40+61.00	108.00	MILLING, BINDER, SURFACE	WHITE	12.00
N.B.	LT.	US 45	SKIP DASH	43+44.72 (BK)		40+59.00	108.00	MILLING, BINDER, SURFACE	WHITE	12.00
N.B.	RT.	US 45	TWLTL - SOLID	45+72.00		43+44.41 (AH)	144.00	MILLING, BINDER, SURFACE	YELLOW	16.00
N.B.	RT.	US 45	TWLTL - SOLID	43+44.72 (BK)		42+89.00	48.00	MILLING, BINDER, SURFACE	YELLOW	5.33
N.B.	LT.	US 45	TWLTL - SOLID	45+72.00		43+44.41 (AH)	144.00	MILLING, BINDER, SURFACE	YELLOW	16.00
N.B.	LT.	US 45	TWLTL - SOLID	43+44.72 (BK)		42+89.00	48.00	MILLING, BINDER, SURFACE	YELLOW	5.33
N.B.	LT.	US 45	MEDIAN	42+89.00		40+61.00	168.00	MILLING, BINDER, SURFACE	YELLOW	18.67
N.B.	RT.	US 45	LT. TURN LANE	41+89.00		40+61.00	48.00	MILLING, BINDER, SURFACE	WHITE	5.33
N.B.	RT.	US 45	RT. TURN LANE	41+56.00		40+61.00	36.00	MILLING, BINDER, SURFACE	WHITE	4.00
N.B.	RT.	US 45	SKIP DASH	39+37.00		27+30.00	384.00	MILLING, BINDER, SURFACE	WHITE	42.67
N.B.	LT.	US 45	SKIP DASH	39+35.00		27+30.00	384.00	MILLING, BINDER, SURFACE	WHITE	42.67
N.B.	RT.	US 45	MEDIAN	39+35.00		37+77.00	96.00	MILLING, BINDER, SURFACE	YELLOW	10.67
N.B.	LT.	US 45	LT. TURN LANE	39+35.00		38+37.00	36.00	MILLING, BINDER, SURFACE	WHITE	4.00
N.B.	RT.	US 45	TWLTL - SOLID	37+77.00		29+90.00	480.00	MILLING, BINDER, SURFACE	YELLOW	53.33
N.B.	LT.	US 45	TWLTL - SOLID	37+77.00		29+90.00	480.00	MILLING, BINDER, SURFACE	YELLOW	53.33
N.B.	LT.	US 45	MEDIAN	29+90.00		27+32.00	192.00	MILLING, BINDER, SURFACE	YELLOW	21.33
N.B.	RT.	US 45	LT. TURN LANE	29+30.00		27+32.00	60.00	MILLING, BINDER, SURFACE	WHITE	6.67
N.B.	RT.	US 45	SKIP DASH	25+97.00		20+02.50	180.00	MILLING, BINDER, SURFACE	WHITE	20.00
N.B.	LT.	US 45	SKIP DASH	25+95.00		20+02.50	180.00	MILLING, BINDER, SURFACE	WHITE	20.00
N.B.	RT.	US 45	MEDIAN	25+95.00		23+50.00	168.00	MILLING, BINDER, SURFACE	YELLOW	18.67
N.B.	LT.	US 45	LT. TURN LANE	25+95.00		24+57.00	48.00	MILLING, BINDER, SURFACE	WHITE	5.33
N.B.	LT.	US 45	RT. TURN LANE	25+95.00		24+93.00	36.00	MILLING, BINDER, SURFACE	WHITE	4.00
N.B.	RT.	US 45	TWLTL - SOLID	23+50.00		20+44.00	216.00	MILLING, BINDER, SURFACE	YELLOW	24.00
N.B.	LT.	US 45	TWLTL - SOLID	23+50.00		20+44.00	216.00	MILLING, BINDER, SURFACE	YELLOW	24.00
N.B.	RT.	US 45	SKIP DASH	20+02.50		15+12.80	156.00	MILLING, BINDER, SURFACE	WHITE	17.33
N.B.	LT.	US 45	SKIP DASH	20+02.50		15+12.80	156.00	MILLING, BINDER, SURFACE	WHITE	17.33
N.B.	RT.	US 45	TWLTL - SOLID	19+71.00		17+14.00	168.00	MILLING, BINDER, SURFACE	YELLOW	18.67
N.B.	LT.	US 45	TWLTL - SOLID	19+71.00		17+14.00	168.00	MILLING, BINDER, SURFACE	YELLOW	18.67
N.B.	LT.	US 45	MEDIAN	17+14.00		15+54.00	120.00	MILLING, BINDER, SURFACE	YELLOW	13.33
N.B.	RT.	US 45	LT. TURN LANE	16+54.00		15+54.00	36.00	MILLING, BINDER, SURFACE	WHITE	4.00
N.B.	RT.	US 45	SKIP DASH	15+12.80		13+30.18 (BK)	60.00	MILLING, BINDER, SURFACE	WHITE	6.67
N.B.	LT.	US 45	SKIP DASH	15+12.80		13+30.18 (BK)	60.00	MILLING, BINDER, SURFACE	WHITE	6.67
N.B.	RT.	US 45	TWLTL - SOLID	14+76.00		13+30.18 (BK)	96.00	MILLING, BINDER, SURFACE	YELLOW	10.67
N.B.	LT.	US 45	TWLTL - SOLID	14+76.00		13+30.18 (BK)	96.00	MILLING, BINDER, SURFACE	YELLOW	10.67
N.B.	RT.	US 45	SKIP DASH	0+00.00		2+89.00	108.00	MILLING, BINDER, SURFACE	WHITE	12.00
N.B.	LT.	US 45	SKIP DASH	0+00.00		2+74.00	96.00	MILLING, BINDER, SURFACE	WHITE	10.67
N.B.	RT.	US 45	TWLTL - SOLID	0+00.00		0+80.50	72.00	MILLING, BINDER, SURFACE	YELLOW	8.00
N.B.	LT.	US 45	TWLTL - SOLID	0+00.00		0+80.50	72.00	MILLING, BINDER, SURFACE	YELLOW	8.00
N.B.	LT.	US 45	MEDIAN	0+80.50		2+75.00	144.00	MILLING, BINDER, SURFACE	YELLOW	16.00
N.B.	RT.	US 45	LT. TURN LANE	1+50.50		2+82.00	60.00	MILLING, BINDER, SURFACE	WHITE	6.67
N.B.	RT.	US 45	SKIP DASH	4+09.00		6+34.30	72.00	MILLING, BINDER, SURFACE	WHITE	8.00
N.B.	LT.	US 45	SKIP DASH	3+97.00		6+34.30	72.00	MILLING, BINDER, SURFACE	WHITE	8.00
					SUB-TOTAL 2 =		8112.00 FT		SUB-TOTAL 2 =	901.33 SQ FT

SCHEDULE OF QUANTITIES

70300100 SHORT TERM PAVEMENT MARKING, (CONTINUED)

70300150 SHORT TERM PAVEMENT MARKING REMOVAL, (CONTINUED)

LOCATION				STATION	TO	STATION	70300100 QUANTITY (FT)	APPLY AFTER	COLOR	70300150 QUANTITY (SQ FT)
N.B.	RT.	US 45	MEDIAN	4+09.00		5+86.00	144.00	MILLING, BINDER, SURFACE	YELLOW	16.00
N.B.	LT.	US 45	LT. TURN LANE	4+03.00		4+88.00	36.00	MILLING, BINDER, SURFACE	WHITE	4.00
N.B.	LT.	US 45	LT. TURN LANE	5+38.00		5+86.00	24.00	MILLING, BINDER, SURFACE	WHITE	2.67
N.B.	RT.	US 45	SKIP DASH	6+34.30		8+95.30	84.00	MILLING, BINDER, SURFACE	WHITE	9.33
N.B.	LT.	US 45	SKIP DASH	6+34.30		8+95.30	84.00	MILLING, BINDER, SURFACE	WHITE	9.33
N.B.	RT.	US 45	MEDIAN	6+61.00		7+56.00	96.00	MILLING, BINDER, SURFACE	YELLOW	10.67
N.B.	LT.	US 45	MEDIAN	6+61.00		8+56.00	144.00	MILLING, BINDER, SURFACE	YELLOW	16.00
N.B.	RT.	US 45	LT. TURN LANE	7+56.00		8+56.00	36.00	MILLING, BINDER, SURFACE	WHITE	4.00
N.B.	RT.	US 45	SKIP DASH	8+95.30		11+87.00	96.00	MILLING, BINDER, SURFACE	WHITE	10.67
N.B.	LT.	US 45	SKIP DASH	8+95.30		11+87.00	96.00	MILLING, BINDER, SURFACE	WHITE	10.67
N.B.	RT.	US 45	MEDIAN	9+25.00		10+51.00	120.00	MILLING, BINDER, SURFACE	YELLOW	13.33
N.B.	LT.	US 45	MEDIAN	9+25.00		11+51.00	168.00	MILLING, BINDER, SURFACE	YELLOW	18.67
N.B.	RT.	US 45	LT. TURN LANE	10+51.00		11+51.00	36.00	MILLING, BINDER, SURFACE	WHITE	4.00
N.B.	RT.	US 45	SKIP DASH	11+87.00		15+12.50	108.00	MILLING, BINDER, SURFACE	WHITE	12.00
N.B.	LT.	US 45	SKIP DASH	11+87.00		15+12.50	108.00	MILLING, BINDER, SURFACE	WHITE	12.00
N.B.	RT.	US 45	MEDIAN	12+21.00		13+76.00	120.00	MILLING, BINDER, SURFACE	YELLOW	13.33
N.B.	LT.	US 45	MEDIAN	12+21.00		14+76.00	192.00	MILLING, BINDER, SURFACE	YELLOW	21.33
N.B.	RT.	US 45	LT. TURN LANE	13+76.00		14+76.00	36.00	MILLING, BINDER, SURFACE	WHITE	4.00
N.B.	RT.	US 45	SKIP DASH	15+12.50		18+60.20	108.00	MILLING, BINDER, SURFACE	WHITE	12.00
N.B.	LT.	US 45	SKIP DASH	15+12.50		18+60.20	108.00	MILLING, BINDER, SURFACE	WHITE	12.00
N.B.	RT.	US 45	TWLTL - SOLID	15+48.00		16+66.00	72.00	MILLING, BINDER, SURFACE	YELLOW	8.00
N.B.	LT.	US 45	TWLTL - SOLID	15+48.00		16+66.00	72.00	MILLING, BINDER, SURFACE	YELLOW	8.00
N.B.	LT.	US 45	MEDIAN	16+66.00		18+26.00	120.00	MILLING, BINDER, SURFACE	YELLOW	13.33
N.B.	RT.	US 45	LT. TURN LANE	17+26.00		18+26.00	36.00	MILLING, BINDER, SURFACE	WHITE	4.00
N.B.	RT.	US 45	SKIP DASH	18+60.20		20+33.42 (BK)	60.00	MILLING, BINDER, SURFACE	WHITE	6.67
N.B.	LT.	US 45	SKIP DASH	18+60.20		20+33.42 (BK)	60.00	MILLING, BINDER, SURFACE	WHITE	6.67
N.B.	RT.	US 45	SKIP DASH	20+31.70 (AH)		26+81.14 (BK)	216.00	MILLING, BINDER, SURFACE	WHITE	24.00
N.B.	LT.	US 45	SKIP DASH	20+31.70 (AH)		26+81.14 (BK)	216.00	MILLING, BINDER, SURFACE	WHITE	24.00
N.B.	RT.	US 45	TWLTL - SOLID	18+98.00		20+33.42 (BK)	96.00	MILLING, BINDER, SURFACE	YELLOW	10.67
N.B.	LT.	US 45	TWLTL - SOLID	18+98.00		20+33.42 (BK)	96.00	MILLING, BINDER, SURFACE	YELLOW	10.67
N.B.	RT.	US 45	TWLTL - SOLID	20+31.70 (AH)		24+55.00	264.00	MILLING, BINDER, SURFACE	YELLOW	29.33
N.B.	LT.	US 45	TWLTL - SOLID	20+31.70 (AH)		24+55.00	264.00	MILLING, BINDER, SURFACE	YELLOW	29.33
N.B.	LT.	US 45	MEDIAN	24+55.00		26+15.00	120.00	MILLING, BINDER, SURFACE	YELLOW	13.33
N.B.	RT.	US 45	LT. TURN LANE	25+15.00		26+15.00	36.00	MILLING, BINDER, SURFACE	WHITE	4.00
N.B.	RT.	US 45	SKIP DASH	37+10.00 (AH)		40+69.00	120.00	MILLING, BINDER, SURFACE	WHITE	13.33
N.B.	LT.	US 45	SKIP DASH	37+10.00 (AH)		40+69.00	120.00	MILLING, BINDER, SURFACE	WHITE	13.33
N.B.	RT.	US 45	TWLTL - SOLID	37+10.00 (AH)		39+11.00	144.00	MILLING, BINDER, SURFACE	YELLOW	16.00
N.B.	LT.	US 45	TWLTL - SOLID	37+10.00 (AH)		39+11.00	144.00	MILLING, BINDER, SURFACE	YELLOW	16.00
N.B.	LT.	US 45	MEDIAN	39+11.00		40+69.00	120.00	MILLING, BINDER, SURFACE	YELLOW	13.33
N.B.	RT.	US 45	LT. TURN LANE	39+71.00		40+69.00	36.00	MILLING, BINDER, SURFACE	WHITE	4.00
N.B.	RT.	US 45	SKIP DASH	41+65.00		46+53.10	156.00	MILLING, BINDER, SURFACE	WHITE	17.33
N.B.	LT.	US 45	SKIP DASH	41+67.00		46+53.10	156.00	MILLING, BINDER, SURFACE	WHITE	17.33
N.B.	LT.	US 45	MEDIAN	41+67.00		43+25.00	96.00	MILLING, BINDER, SURFACE	YELLOW	10.67
N.B.	LT.	US 45	LT. TURN LANE	41+67.00		42+65.00	36.00	MILLING, BINDER, SURFACE	WHITE	4.00
N.B.	RT.	US 45	TWLTL - SOLID	43+25.00		44+66.00	96.00	MILLING, BINDER, SURFACE	YELLOW	10.67
N.B.	LT.	US 45	TWLTL - SOLID	43+25.00		44+66.00	96.00	MILLING, BINDER, SURFACE	YELLOW	10.67
N.B.	LT.	US 45	MEDIAN	44+66.00		46+20.00	120.00	MILLING, BINDER, SURFACE	YELLOW	13.33
N.B.	RT.	US 45	LT. TURN LANE	45+26.00		46+20.00	36.00	MILLING, BINDER, SURFACE	WHITE	4.00
N.B.	RT.	US 45	SKIP DASH	46+53.10		49+00.00	96.00	MILLING, BINDER, SURFACE	WHITE	10.67
N.B.	LT.	US 45	SKIP DASH	46+53.10		49+00.00	96.00	MILLING, BINDER, SURFACE	WHITE	10.67
N.B.	RT.	US 45	TWLTL - SOLID	46+88.00		47+62.00	48.00	MILLING, BINDER, SURFACE	YELLOW	5.33
N.B.	LT.	US 45	TWLTL - SOLID	46+88.00		47+62.00	48.00	MILLING, BINDER, SURFACE	YELLOW	5.33
N.B.	LT.	US 45	MEDIAN	47+62.00		49+00.00	96.00	MILLING, BINDER, SURFACE	YELLOW	10.67
N.B.	RT.	US 45	LT. TURN LANE	48+32.00		49+00.00	24.00	MILLING, BINDER, SURFACE	WHITE	2.67
N.B.	RT.	US 45	SHOULDER	132+48.00		80+82.00	324.00	MILLING, BINDER, SURFACE	WHITE	36.00
N.B.	RT.	US 45	SHOULDER	78+79.00		77+31.00	24.00	MILLING, BINDER, SURFACE	WHITE	2.67
N.B.	LT.	US 45	SHOULDER	134+98.00		134+24.00	24.00	MILLING, BINDER, SURFACE	WHITE	2.67
N.B.	LT.	US 45	SHOULDER	129+82.00		124+34.00	48.00	MILLING, BINDER, SURFACE	WHITE	5.33
N.B.	LT.	US 45	SHOULDER	122+85.00		115+09.00	60.00	MILLING, BINDER, SURFACE	WHITE	6.67
N.B.	LT.	US 45	SHOULDER	111+15.00		107+74.00	36.00	MILLING, BINDER, SURFACE	WHITE	4.00
N.B.	LT.	US 45	SHOULDER	107+18.00		95+82.00	84.00	MILLING, BINDER, SURFACE	WHITE	9.33
					SUB-TOTAL 3 =		6156.00		SUB-TOTAL 3 =	684.00
							FT			SQ FT

SCHEDULE OF QUANTITIES

70300100 SHORT TERM PAVEMENT MARKING, (CONTINUED)

70300150 SHORT TERM PAVEMENT MARKING REMOVAL, (CONTINUED)

LOCATION				STATION	TO	STATION	70300100 QUANTITY (FT)	APPLY AFTER	COLOR	70300150 QUANTITY (SQ FT)
N.B.	LT.	US 45	SHOULDER	95+34.00		88+78.00	60.00	MILLING, BINDER, SURFACE	WHITE	6.67
N.B.	LT.	US 45	SHOULDER	88+30.00		80+98.00	60.00	MILLING, BINDER, SURFACE	WHITE	6.67
CURTIS RD. (LT.)			LT. TURN LANE	13+87.00		14+33.00	24.00	MILLING, BINDER, SURFACE	WHITE	2.67
CURTIS RD. (LT.)			MEDIAN	13+87.00		14+33.00	48.00	MILLING, BINDER, SURFACE	YELLOW	5.33
CURTIS RD. (RT.)			LT. TURN LANE	15+63.00		16+17.00	24.00	MILLING, BINDER, SURFACE	WHITE	2.67
CURTIS RD. (RT.)			MEDIAN	15+65.00		16+16.00	48.00	MILLING, BINDER, SURFACE	YELLOW	5.33
ARBOUR TOWNE PL.			SOLID LINE	0+31.00		1+19.40	36.00	MILLING, BINDER, SURFACE	WHITE	4.00
ARBOUR TOWNE PL.			SOLID LINE	0+31.00		1+19.40	36.00	MILLING, BINDER, SURFACE	WHITE	4.00
BURWASH AVE.			SOLID LINE	0+53.00		0+70.70	12.00	MILLING, BINDER, SURFACE	WHITE	1.33
BURWASH AVE.			SOLID LINE	0+58.00		0+70.70	12.00	MILLING, BINDER, SURFACE	WHITE	1.33
WINDSOR RD. (LT.)			RT.TURN LANE	0+69.00		0+92.00	12.00	MILLING, BINDER, SURFACE	WHITE	1.33
WINDSOR RD. (LT.)			SKIP DASH	0+69.00		0+92.00	12.00	MILLING, BINDER, SURFACE	WHITE	1.33
WINDSOR RD. (LT.)			MEDIAN	0+69.00		0+92.00	12.00	MILLING, BINDER, SURFACE	WHITE	1.33
WINDSOR RD. (LT.)			MEDIAN	0+69.00		0+92.00	12.00	MILLING, BINDER, SURFACE	WHITE	1.33
WINDSOR RD. (LT.)			MEDIAN	0+69.00		0+92.00	24.00	MILLING, BINDER, SURFACE	YELLOW	2.67
WINDSOR RD. (LT.)			SKIP DASH	0+67.00		1+09.30	24.00	MILLING, BINDER, SURFACE	WHITE	2.67
WINDSOR RD. (RT.)			SKIP DASH	0+55.00		1+07.50	24.00	MILLING, BINDER, SURFACE	WHITE	2.67
WINDSOR RD. (RT.)			MEDIAN	0+55.00		0+92.40	12.00	MILLING, BINDER, SURFACE	WHITE	1.33
WINDSOR RD. (RT.)			MEDIAN	0+55.00		0+92.40	12.00	MILLING, BINDER, SURFACE	WHITE	1.33
WINDSOR RD. (RT.)			SKIP DASH	0+55.00		0+92.40	12.00	MILLING, BINDER, SURFACE	WHITE	1.33
WINDSOR RD. (RT.)			RT.TURN LANE	0+55.00		0+92.40	12.00	MILLING, BINDER, SURFACE	WHITE	1.33
KNOLLWOOD DR. (LT.)			RT.TURN LANE	0+61.00		1+12.50	24.00	MILLING, BINDER, SURFACE	WHITE	2.67
KNOLLWOOD DR. (LT.)			MEDIAN	0+61.00		1+12.50	48.00	MILLING, BINDER, SURFACE	YELLOW	5.33
DEVONSHIRE DR. (LT.)			RT.TURN LANE	0+64.00		1+21.20	24.00	MILLING, BINDER, SURFACE	WHITE	2.67
DEVONSHIRE DR. (LT.)			MEDIAN	0+64.00		1+21.20	48.00	MILLING, BINDER, SURFACE	YELLOW	5.33
FOX DR. (LT.)			LT. TURN LANE	0+59.50		0+91.90	12.00	MILLING, BINDER, SURFACE	WHITE	1.33
FOX DR. (LT.)			MEDIAN	0+59.50		0+91.90	24.00	MILLING, BINDER, SURFACE	YELLOW	2.67
KIRBY AVE. (LT.)			RT.TURN LANE	10+62.00		11+03.00	24.00	MILLING, BINDER, SURFACE	WHITE	2.67
KIRBY AVE. (LT.)			LT. TURN LANE	10+62.00		11+03.00	24.00	MILLING, BINDER, SURFACE	WHITE	2.67
KIRBY AVE. (LT.)			SKIP DASH	10+60.00		11+03.00	24.00	MILLING, BINDER, SURFACE	WHITE	2.67
KIRBY AVE. (RT.)			SKIP DASH	8+91.00		9+48.00	24.00	MILLING, BINDER, SURFACE	WHITE	2.67
KIRBY AVE. (RT.)			LT. TURN LANE	9+20.00		9+45.00	12.00	MILLING, BINDER, SURFACE	WHITE	1.33
KIRBY AVE. (RT.)			RT.TURN LANE	8+91.00		9+44.00	24.00	MILLING, BINDER, SURFACE	WHITE	2.67
HESSEL BLVD. (LT.)			LT. TURN LANE	0+77.00		1+50.30	24.00	MILLING, BINDER, SURFACE	WHITE	2.67
HESSEL BLVD. (LT.)			MEDIAN	0+69.00		1+50.30	72.00	MILLING, BINDER, SURFACE	YELLOW	8.00
STADIUM DR. (RT.)			MEDIAN	0+47.00		0+96.60	48.00	MILLING, BINDER, SURFACE	YELLOW	5.33
STADIUM DR. (RT.)			LT. TURN LANE	0+49.00		0+96.60	24.00	MILLING, BINDER, SURFACE	WHITE	2.67
GREEN ST. (LT.)			RT.TURN LANE	0+50.00		0+77.00	12.00	MILLING, BINDER, SURFACE	WHITE	1.33
GREEN ST. (LT.)			LT. TURN LANE	0+50.00		0+77.00	12.00	MILLING, BINDER, SURFACE	WHITE	1.33
GREEN ST. (LT.)			MEDIAN	0+50.00		0+77.00	24.00	MILLING, BINDER, SURFACE	YELLOW	2.67
N.B.	RT.	US 45	STOP BAR	133+84.00			1044.00	MILLING, BINDER, SURFACE	WHITE	116.00
N.B.	LT.	US 45	STOP BAR	132+76.00			990.00	MILLING, BINDER, SURFACE	WHITE	110.00
N.B.	RT.	US 45	STOP BAR	123+91.00			684.00	MILLING, BINDER, SURFACE	WHITE	76.00
N.B.	LT.	US 45	STOP BAR	122+85.00			900.00	MILLING, BINDER, SURFACE	WHITE	100.00
N.B.	RT.	US 45	STOP BAR	115+09.00			684.00	MILLING, BINDER, SURFACE	WHITE	76.00
N.B.	LT.	US 45	STOP BAR	113+96.00			918.00	MILLING, BINDER, SURFACE	WHITE	102.00
N.B.	RT.	US 45	STOP BAR	80+76.00			954.00	MILLING, BINDER, SURFACE	WHITE	106.00
N.B.	LT.	US 45	STOP BAR	79+33.00			1116.00	MILLING, BINDER, SURFACE	WHITE	124.00
N.B.	RT.	US 45	STOP BAR	70+70.00			684.00	MILLING, BINDER, SURFACE	WHITE	76.00
N.B.	LT.	US 45	STOP BAR	69+62.00			756.00	MILLING, BINDER, SURFACE	WHITE	84.00
N.B.	RT.	US 45	STOP BAR	58+14.00			684.00	MILLING, BINDER, SURFACE	WHITE	76.00
N.B.	LT.	US 45	STOP BAR	56+78.00			990.00	MILLING, BINDER, SURFACE	WHITE	110.00
N.B.	RT.	US 45	STOP BAR	40+59.00			918.00	MILLING, BINDER, SURFACE	WHITE	102.00
N.B.	LT.	US 45	STOP BAR	39+37.00			612.00	MILLING, BINDER, SURFACE	WHITE	68.00
N.B.	RT.	US 45	STOP BAR	27+30.00			972.00	MILLING, BINDER, SURFACE	WHITE	108.00
N.B.	LT.	US 45	STOP BAR	25+97.00			1026.00	MILLING, BINDER, SURFACE	WHITE	114.00
N.B.	RT.	US 45	STOP BAR	2+80.50			738.00	MILLING, BINDER, SURFACE	WHITE	82.00
N.B.	LT.	US 45	STOP BAR	4+04.00			702.00	MILLING, BINDER, SURFACE	WHITE	78.00
N.B.	RT.	US 45	STOP BAR	40+71.00			702.00	MILLING, BINDER, SURFACE	WHITE	78.00
N.B.	LT.	US 45	STOP BAR	41+65.00			702.00	MILLING, BINDER, SURFACE	WHITE	78.00
					SUB-TOTAL 4 =		17832.00		SUB-TOTAL 4 =	1981.33
							FT			SQ FT

SCHEDULE OF QUANTITIES

70300100 SHORT TERM PAVEMENT MARKING, (CONTINUED)

70300150 SHORT TERM PAVEMENT MARKING REMOVAL, (CONTINUED)

LOCATION				STATION	TO	STATION	70300100 QUANTITY (FT)	APPLY AFTER	COLOR	70300150 QUANTITY (SQ FT)
	LT.	CURTIS RD.	STOP BAR	14+35.00			684.00	MILLING, BINDER, SURFACE	WHITE	76.00
	RT.	CURTIS RD.	STOP BAR	15+63.00			594.00	MILLING, BINDER, SURFACE	WHITE	66.00
	LT.	ARBOURS TOWNE PL.	STOP BAR	0+60.00			288.00	MILLING, BINDER, SURFACE	WHITE	32.00
	LT.	ARBOURS TOWNE PL.	STOP BAR	0+60.00			216.00	MILLING, BINDER, SURFACE	WHITE	24.00
	LT.	BURWASH AVE.	STOP BAR	0+56.00			378.00	MILLING, BINDER, SURFACE	WHITE	42.00
	LT.	WINDSOR RD.	STOP BAR	0+67.00			1170.00	MILLING, BINDER, SURFACE	WHITE	130.00
	RT.	WINDSOR RD.	STOP BAR	0+55.00			1206.00	MILLING, BINDER, SURFACE	WHITE	134.00
	LT.	KNOLLWOOD DR.	STOP BAR	0+59.00			684.00	MILLING, BINDER, SURFACE	WHITE	76.00
	LT.	DEVONSHIRE DR.	STOP BAR	0+62.00			612.00	MILLING, BINDER, SURFACE	WHITE	68.00
	LT.	FOX DR.	STOP BAR	0+57.50			684.00	MILLING, BINDER, SURFACE	WHITE	76.00
	RT.	KIRBY AVE.	STOP BAR	9+48.00			972.00	MILLING, BINDER, SURFACE	WHITE	108.00
	LT.	KIRBY AVE.	STOP BAR	10+60.00			936.00	MILLING, BINDER, SURFACE	WHITE	104.00
	LT.	HESSEL BLVD.	STOP BAR	0+70.50			324.00	MILLING, BINDER, SURFACE	WHITE	36.00
	LT.	HESSEL BLVD.	STOP BAR	0+70.50			576.00	MILLING, BINDER, SURFACE	WHITE	64.00
	RT.	STADIUM DR.	STOP BAR	0+46.00			882.00	MILLING, BINDER, SURFACE	WHITE	98.00
	LT.	GREEN ST.	STOP BAR	0+48.00			684.00	MILLING, BINDER, SURFACE	WHITE	76.00
CURTIS RD. / WEST SIDE			CROSSWALK	14+48.00			546.00	MILLING, BINDER, SURFACE	WHITE	60.67
CURTIS RD. / NORTH SIDE			CROSSWALK	132+87.00			606.00	MILLING, BINDER, SURFACE	WHITE	67.33
ARBOUR TOWNE PL. / WEST SIDE			CROSSWALK	0+49.00			630.00	MILLING, BINDER, SURFACE	WHITE	70.00
BURWASH AVE. / WEST SIDE			CROSSWALK	0+46.00			402.00	MILLING, BINDER, SURFACE	WHITE	44.67
WINDSOR RD. / SOUTH SIDE			CROSSWALK	80+64.00			603.00	MILLING, BINDER, SURFACE	WHITE	67.00
WINDSOR RD. / WEST SIDE			CROSSWALK	0+56.00			717.00	MILLING, BINDER, SURFACE	WHITE	79.67
KNOLLWOOD DR. / SOUTH SIDE			CROSSWALK	70+59.00			471.00	MILLING, BINDER, SURFACE	WHITE	52.33
KNOLLWOOD DR. / WEST SIDE			CROSSWALK	0+45.00			498.00	MILLING, BINDER, SURFACE	WHITE	55.33
DEVONSHIRE DR. / WEST SIDE			CROSSWALK	0+49.00			501.00	MILLING, BINDER, SURFACE	WHITE	55.67
FOX DR. / WEST SIDE			CROSSWALK	0+45.00			405.00	MILLING, BINDER, SURFACE	WHITE	45.00
KIRBY AVE. / SOUTH SIDE			CROSSWALK	27+18.00			582.00	MILLING, BINDER, SURFACE	WHITE	64.67
KIRBY AVE. / WEST SIDE			CROSSWALK	10+48.00			654.00	MILLING, BINDER, SURFACE	WHITE	72.67
KIRBY AVE. / NORTH SIDE			CROSSWALK	26+11.00			576.00	MILLING, BINDER, SURFACE	WHITE	64.00
KIRBY AVE. / EAST SIDE			CROSSWALK	9+66.00			651.00	MILLING, BINDER, SURFACE	WHITE	72.33
HESSEL BLVD. / SOUTH SIDE			CROSSWALK	2+94.00			417.00	MILLING, BINDER, SURFACE	WHITE	46.33
HESSEL BLVD. / WEST SIDE			CROSSWALK	0+51.00			304.00	MILLING, BINDER, SURFACE	WHITE	42.67
HESSEL BLVD. / WEST SIDE			CROSSWALK	0+70.00			138.00	MILLING, BINDER, SURFACE	WHITE	15.33
HESSEL BLVD. / NORTH SIDE			CROSSWALK	3+89.00			423.00	MILLING, BINDER, SURFACE	WHITE	47.00
STADIUM DR. / EAST SIDE			CROSSWALK	0+46.00			531.00	MILLING, BINDER, SURFACE	WHITE	59.00
GREEN ST. / SOUTH SIDE			CROSSWALK	40+84.00			426.00	MILLING, BINDER, SURFACE	WHITE	47.33
GREEN ST. / WEST SIDE			CROSSWALK	0+35.00			414.00	MILLING, BINDER, SURFACE	WHITE	46.00
GREEN ST. / NORTH SIDE			CROSSWALK	41+52.00			360.00	MILLING, BINDER, SURFACE	WHITE	40.00
					SUB-TOTAL 5 =		21825.00		SUB-TOTAL 5 =	2425.00
							FT			SQ FT

	70300100 QUANTITY (FT)
SUB-TOTAL 1 =	12744.00
SUB-TOTAL 2 =	8112.00
SUB-TOTAL 3 =	6156.00
SUB-TOTAL 4 =	17832.00
SUB-TOTAL 5 =	21825.00
TOTAL =	66669.00
USE =	66669.00
	FT

	70300150 QUANTITY (SQ FT)
SUB-TOTAL 1 =	1416.00
SUB-TOTAL 2 =	901.33
SUB-TOTAL 3 =	684.00
SUB-TOTAL 4 =	1981.33
SUB-TOTAL 5 =	2425.00
TOTAL =	7407.67
USE =	7408.00
	SQ FT

NOTES:

1) STATIONS SHOWN ON SIDEROADS WITHOUT CENTERLINE CONTROL ARE FOR REFERENCE ONLY.
2) SHORT TERM PAVEMENT MARKINGS FOR BOTH STOP BARS AND CROSSWALKS ARE CALCULATED AT SIGNALIZED INTERSECTIONS ONLY.
3) SHORT TERM PAVEMENT MARKINGS FOR STOP BARS CONSIST OF 6 EACH - 4" LINES.
4) SHORT TERM PAVEMENT MARKINGS FOR CROSSWALKS CONSIST OF 2 - 4" LINES PLACED 6 FT. APART.
5) SHORT TERM PAVEMENT MARKINGS WILL BE REMOVED FROM THE FINAL SURFACE ONLY.

SCHEDULE OF QUANTITIES

Z0010615 CLEANING EXISTING INLETS

LOCATION	STATION	OFFSET (FT)		Z0010615 QUANTITY (EACH)
US 45	133+68.28	LT.	85.79	1.0
US 45	133+67.97	LT.	95.61	1.0
US 45	133+23.44	LT.	105.80	1.0
US 45	133+21.89	LT.	99.93	1.0
US 45	131+54.50	LT.	45.15	1.0
US 45	130+13.93	LT.	41.32	1.0
US 45	128+74.28	LT.	40.81	1.0
US 45	127+35.06	LT.	41.00	1.0
US 45	126+05.48	LT.	40.75	1.0
US 45	123+83.52	LT.	88.34	1.0
US 45	123+28.40	LT.	94.80	1.0
US 45	123+27.55	LT.	88.05	1.0
US 45	115+01.95	LT.	41.06	1.0
US 45	110+99.79	LT.	40.91	1.0
US 45	107+89.85	LT.	41.06	1.0
US 45	107+84.97	LT.	41.37	1.0
US 45	100+99.45	LT.	40.95	1.0
US 45	99+68.35	LT.	41.10	1.0
US 45	98+39.49	LT.	41.00	1.0
US 45	97+09.20	LT.	40.99	1.0
US 45	95+95.89	LT.	40.88	1.0
US 45	95+89.33	LT.	40.95	1.0
US 45	90+99.05	LT.	40.98	1.0
US 45	88+70.75	LT.	49.15	1.0
US 45	88+37.67	LT.	49.11	1.0
US 45	82+31.90	LT.	41.07	1.0
US 45	82+26.11	LT.	41.12	1.0
US 45	79+69.22	LT.	107.32	1.0
US 45	79+25.43	LT.	52.95	1.0
US 45	78+40.03	LT.	47.33	1.0
US 45	77+58.07	LT.	47.17	1.0
US 45	76+78.65	LT.	47.37	1.0
US 45	79+97.93	LT.	47.37	1.0
US 45	74+98.76	LT.	40.00	1.0
US 45	74+20.97	LT.	33.42	1.0
US 45	73+36.14	LT.	33.09	1.0
US 45	72+57.99	LT.	33.39	1.0
US 45	71+81.59	LT.	33.23	1.0
US 45	70+56.88	LT.	60.80	1.0
US 45	69+89.53	LT.	68.35	1.0
US 45	69+39.44	LT.	32.86	1.0
US 45	67+98.80	LT.	33.01	1.0
US 45	66+69.09	LT.	33.20	1.0
US 45	65+54.53	LT.	33.98	1.0
US 45	63+88.42	LT.	33.12	1.0
US 45	62+39.22	LT.	32.60	1.0
US 45	61+18.48	LT.	33.16	1.0
US 45	60+07.97	LT.	33.12	1.0
US 45	58+97.51	LT.	33.07	1.0
US 45	57+01.28	LT.	68.35	1.0
US 45	56+53.19	LT.	45.20	1.0
US 45	55+59.78	LT.	44.95	1.0
US 45	53+46.85	LT.	36.51	1.0
US 45	52+42.18	LT.	33.12	1.0
US 45	51+08.74	LT.	33.40	1.0
US 45	48+90.76	LT.	33.20	1.0
US 45	47+99.52	LT.	33.05	1.0
US 45	46+47.16	LT.	33.16	1.0
US 45	44+84.03	LT.	32.68	1.0
US 45	43+19.14	LT.	32.91	1.0
US 45	41+57.85	LT.	32.91	1.0
US 45	40+53.64	LT.	40.90	1.0
		SUB-TOTAL 1 =		62.0
				EACH

Z0010615 CLEANING EXISTING INLETS

LOCATION	STATION	OFFSET (FT)		Z0010615 QUANTITY (EACH)
US 45	40+32.06	LT.	76.18	1.0
US 45	39+89.75	LT.	92.39	1.0
US 45	39+30.71	LT.	28.95	1.0
US 45	38+77.62	LT.	28.59	1.0
US 45	38+19.08	LT.	28.59	1.0
US 45	37+48.30	LT.	28.64	1.0
US 45	36+79.50	LT.	28.53	1.0
US 45	36+08.43	LT.	28.65	1.0
US 45	36+02.46	LT.	28.59	1.0
US 45	35+39.07	LT.	28.22	1.0
US 45	34+70.80	LT.	28.50	1.0
US 45	33+99.13	LT.	28.64	1.0
US 45	33+30.11	LT.	28.36	1.0
US 45	33+23.02	LT.	28.46	1.0
US 45	32+60.77	LT.	28.47	1.0
US 45	31+98.86	LT.	28.23	1.0
US 45	31+36.14	LT.	28.63	1.0
US 45	30+51.81	LT.	28.44	1.0
US 45	29+98.69	LT.	28.53	1.0
US 45	28+95.77	LT.	30.61	1.0
US 45	27+93.71	LT.	30.93	1.0
US 45	25+83.12	LT.	41.33	1.0
US 45	24+04.36	LT.	32.47	1.0
US 45	23+56.86	LT.	31.14	1.0
US 45	22+91.33	LT.	28.23	1.0
US 45	22+24.51	LT.	28.09	1.0
US 45	20+64.77	LT.	28.58	1.0
US 45	20+60.02	LT.	28.24	1.0
US 45	19+83.20	LT.	34.92	1.0
US 45	18+73.29	LT.	29.89	1.0
US 45	18+42.71	LT.	28.41	1.0
US 45	18+32.35	LT.	28.47	1.0
US 45	17+87.77	LT.	28.36	1.0
US 45	17+42.40	LT.	28.18	1.0
US 45	16+98.96	LT.	28.15	1.0
US 45	16+46.18	LT.	28.51	1.0
US 45	15+80.97	LT.	28.49	1.0
US 45	14+97.74	LT.	37.83	1.0
US 45	00+00.56	LT.	28.47	1.0
US 45	00+74.83	LT.	28.47	1.0
US 45	01+50.09	LT.	28.35	1.0
US 45	02+26.32	LT.	42.42	1.0
US 45	02+38.99	LT.	63.02	1.0
US 45	03+11.37	LT.	72.04	1.0
US 45	03+15.85	LT.	67.59	1.0
US 45	03+91.76	LT.	28.42	1.0
US 45	04+93.58	LT.	31.19	1.0
US 45	05+79.71	LT.	28.95	1.0
US 45	06+39.12	LT.	57.67	1.0
US 45	06+39.64	LT.	54.07	1.0
US 45	07+23.84	LT.	28.67	1.0
US 45	07+79.95	LT.	28.53	1.0
US 45	08+71.80	LT.	43.78	1.0
US 45	09+07.92	LT.	41.57	1.0
US 45	09+89.28	LT.	28.65	1.0
US 45	10+44.63	LT.	28.66	1.0
US 45	11+09.35	LT.	29.06	1.0
US 45	11+53.98	LT.	32.43	1.0
US 45	12+17.54	LT.	29.90	1.0
US 45	12+76.35	LT.	28.45	1.0
US 45	13+14.86	LT.	28.54	1.0
US 45	13+20.19	LT.	28.39	1.0
		SUB-TOTAL 2 =		62.0
				EACH

Z0010615 CLEANING EXISTING INLETS

LOCATION	STATION	OFFSET (FT)		Z0010615 QUANTITY (EACH)
US 45	13+74.34	LT.	28.53	1.0
US 45	14+19.55	LT.	28.29	1.0
US 45	14+95.44	LT.	43.02	1.0
US 45	15+30.12	LT.	44.99	1.0
US 45	16+00.85	LT.	29.10	1.0
US 45	16+47.00	LT.	28.97	1.0
US 45	16+52.51	LT.	29.20	1.0
US 45	17+05.07	LT.	28.56	1.0
US 45	17+45.53	LT.	28.61	1.0
US 45	18+43.08	LT.	38.77	1.0
US 45	18+80.19	LT.	41.09	1.0
US 45	19+06.70	LT.	27.82	1.0
US 45	19+46.91	LT.	27.95	1.0
US 45	19+53.59	LT.	27.93	1.0
US 45	19+92.81	LT.	27.94	1.0
US 45	20+30.36	LT.	27.90	1.0
US 45	20+69.97	LT.	27.67	1.0
US 45	21+25.76	LT.	27.83	1.0
US 45	23+00.07	LT.	27.72	1.0
US 45	23+05.85	LT.	27.86	1.0
US 45	24+69.66	LT.	27.81	1.0
US 45	24+75.96	LT.	27.81	1.0
US 45	26+28.55	LT.	38.87	1.0
US 45	26+68.62	LT.	37.60	1.0
US 45	26+69.77	LT.	34.42	1.0
US 45	40+57.07	LT.	28.86	1.0
US 45	41+50.24	LT.	50.50	1.0
US 45	41+67.02	LT.	32.73	1.0
US 45	46+40.18	LT.	63.29	1.0
US 45	80+24.62	RT.	109.78	1.0
US 45	79+37.87	RT.	90.07	1.0
US 45	78+86.23	RT.	41.37	1.0
US 45	76+99.68	RT.	39.59	1.0
US 45	75+99.08	RT.	33.76	1.0
US 45	74+99.49	RT.	33.38	1.0
US 45	74+20.13	RT.	33.07	1.0
US 45	73+38.44	RT.	32.90	1.0
US 45	72+59.29	RT.	32.87	1.0
US 45	71+79.85	RT.	33.25	1.0
US 45	70+79.72	RT.	33.14	1.0
US 45	69+39.21	RT.	33.32	1.0
US 45	67+99.97	RT.	33.22	1.0
US 45	66+69.22	RT.	33.23	1.0
US 45	65+52.70	RT.	33.16	1.0
US 45	65+00.06	RT.	33.23	1.0
US 45	63+89.38	RT.	33.27	1.0
US 45	62+39.54	RT.	33.38	1.0
US 45	60+08.91	RT.	32.84	1.0
US 45	58+72.35	RT.	33.23	1.0
US 45	55+40.46	RT.	33.29	1.0
US 45	53+47.40	RT.	33.38	1.0
US 45	52+01.41	RT.	33.53	1.0
US 45	51+09.18	RT.	33.73	1.0
US 45	48+89.58	RT.	33.45	1.0
US 45	47+99.60	RT.	33.42	1.0
US 45	46+28.71	RT.	33.74	1.0
US 45	45+20.87	RT.	34.53	1.0
US 45	43+26.13	RT.	37.81	1.0
US 45	41+57.20	RT.	44.82	1.0
US 45	40+63.11	RT.	45.05	1.0
US 45	38+61.63	RT.	29.64	1.0
US 45	38+12.78	RT.	28.51	1.0
		SUB-TOTAL 3 =		62.0
				EACH

Z0010615 CLEANING EXISTING INLETS

LOCATION	STATION	OFFSET (FT)		Z0010615 QUANTITY (EACH)
US 45	37+57.37	RT.	28.78	1.0
US 45	37+08.02	RT.	28.56	1.0
US 45	36+58.81	RT.	28.67	1.0
US 45	36+08.37	RT.	28.47	1.0
US 45	35+58.46	RT.	28.67	1.0
US 45	35+14.52	RT.	28.55	1.0
US 45	34+68.44	RT.	28.29	1.0
US 45	34+19.28	RT.	28.32	1.0
US 45	33+35.11	RT.	28.52	1.0
US 45	33+28.89	RT.	28.35	1.0
US 45	32+64.57	RT.	29.82	1.0
US 45	31+97.94	RT.	29.05	1.0
US 45	31+53.56	RT.	28.62	1.0
US 45	31+08.06	RT.	28.97	1.0
US 45	30+43.35	RT.	29.07	1.0
US 45	29+88.54	RT.	28.60	1.0
US 45	29+07.88	RT.	29.69	1.0
US 45	25+65.06	RT.	37.20	1.0
US 45	24+49.77	RT.	34.65	1.0
US 45	23+09.88	RT.	31.77	1.0
US 45	22+46.16	RT.	29.56	1.0
US 45	20+97.26	RT.	28.44	1.0
US 45	20+48.39	RT.	28.49	1.0
US 45	20+43.04	RT.	28.42	1.0
US 45	18+39.86	RT.	28.49	1.0
US 45	18+33.59	RT.	28.43	1.0
US 45	17+84.59	RT.	28.44	1.0
US 45	17+36.93	RT.	28.40	1.0
US 45	16+75.25	RT.	28.51	1.0
US 45	16+25.16	RT.	28.64	1.0
US 45	15+74.08	RT.	28.58	1.0
US 45	13+67.76	RT.	28.41	1.0
US 45	00+26.45	RT.	28.65	1.0
US 45	01+02.30	RT.	28.74	1.0
US 45	01+74.53	RT.	28.65	1.0
US 45	02+33.33	RT.	28.80	1.0
US 45	02+98.86	RT.	26.62	1.0
US 45	04+95.24	RT.	28.45	1.0
US 45	06+62.48	RT.	28.33	1.0
US 45	06+93.62	RT.	28.70	1.0
US 45	07+45.05	RT.	28.49	1.0
US 45	07+94.64	RT.	28.48	1.0
US 45	08+43.69	RT.	28.41	1.0
US 45	08+96.43	RT.	28.52	1.0
US 45	09+44.00	RT.	28.54	1.0
US 45	09+94.81	RT.	28.51	1.0
US 45	10+43.93	RT.	28.44	1.0
US 45	10+95.00	RT.	28.35	1.0
US 45	11+44.77	RT.	28.81	1.0
US 45	11+89.89	RT.	28.46	1.0
US 45	12+43.11	RT.	28.45	1.0
US 45	12+90.96	RT.	28.33	1.0
US 45	13+27.20	RT.	28.55	1.0
US 45	13+32.82	RT.	28.55	1.0
US 45	13+72.46	RT.	28.27	1.0
US 45	14+14.54	RT.	28.00	1.0
US 45	14+54.95	RT.	28.49	1.0
US 45	15+97.59	RT.	28.70	1.0
US 45	16+52.38	RT.	28.52	1.0
US 45	16+58.97	RT.	28.55	1.0
US 45	16+99.34	RT.	28.53	1.0
US 45	17+48.43	RT.	28.47	1.0
		SUB-TOTAL 4 =		62.0
				EACH

Z0010615 CLEANING EXISTING INLETS

LOCATION	STATION	OFFSET (FT)		Z0010615 QUANTITY (EACH)
US 45	19+04.00	RT.	27.95	1.0
US 45	19+45.11	RT.	28.18	1.0
US 45	19+52.57	RT.	28.06	1.0
US 45	19+84.18	RT.	27.99	1.0
US 45	20+54.89	RT.	28.29	1.0
US 45	20+91.86	RT.	28.20	1.0
US 45	23+34.09	RT.	28.05	1.0
US 45	23+44.99	RT.	28.27	1.0
US 45	24+68.48	RT.	28.17	1.0
US 45	24+75.40	RT.	28.17	1.0
US 45	26+14.00	RT.	28.60	1.0
US 45	26+67.97	RT.	34.87	1.0
US 45	38+94.71	RT.	27.61	1.0
US 45	39+00.38	RT.	27.61	1.0
US 45	40+63.72	RT.	30.32	1.0
US 45	40+74.59	RT.	36.10	1.0
US 45	41+68.69	RT.	29.38	1.0
US 45	41+72.09	RT.	28.75	1.0
US 45	43+14.31	RT.	28.15	1.0
US 45	44+11.33	RT.	28.07	1.0
US 45	46+36.95	RT.	28.05	1.0
		SUB-TOTAL 5 =		21.0
				EACH

	Z0010615 QUANTITY (EACH)
SUB-TOTAL 1 =	62.0
SUB-TOTAL 2 =	62.0
SUB-TOTAL 3 =	62.0
SUB-TOTAL 4 =	62.0
SUB-TOTAL 5 =	21.0
TOTAL =	269.0
	EACH

SCHEDULE OF QUANTITIES

56109210 WATER VALVES TO BE ADJUSTED

60300305 FRAMES AND LIDS TO BE ADJUSTED

Z0001110 GAS VALVE TO BE ADJUSTED

LOCATION	STATION	OFFSET (FT)		56109210 QUANTITY (EACH)	60300305 QUANTITY (EACH)	Z0001110 QUANTITY (EACH)	TYPE	COMMENTS
US 45	133+65.52	LT.	38.79		1.0		MANHOLE	HMA ADJUSTMENT
US 45	133+50.96	LT.	53.27	1.0			WATER VALVE	HMA ADJUSTMENT
US 45	133+16.12	RT.	28.15		1.0		MANHOLE	HMA ADJUSTMENT
US 45	132+99.68	LT.	39.40	1.0			WATER VALVE	HMA ADJUSTMENT
US 45	132+99.03	LT.	52.41	1.0			WATER VALVE	HMA ADJUSTMENT
US 45	132+94.47	LT.	51.39	1.0			WATER VALVE	HMA ADJUSTMENT
US 45	123+83.10	LT.	40.20		1.0		MANHOLE	HMA ADJUSTMENT
US 45	114+34.46	LT.	40.81		1.0		MANHOLE	HMA ADJUSTMENT
US 45	114+29.44	LT.	57.45	1.0			WATER VALVE	HMA ADJUSTMENT
US 45	114+27.23	LT.	52.35	1.0			WATER VALVE	HMA ADJUSTMENT
US 45	107+26.03	LT.	61.34	1.0			WATER VALVE	SIDEWALK ADJUSTMENT
US 45	79+88.18	LT.	26.35		1.0		MANHOLE	HMA ADJUSTMENT
US 45	79+84.82	RT.	27.44		1.0		MANHOLE	HMA ADJUSTMENT
US 45	79+75.42	LT.	104.45		1.0		MANHOLE	HMA ADJUSTMENT
US 45	70+79.15	LT.	33.51		1.0		MANHOLE	HMA ADJUSTMENT
US 45	70+03.76	LT.	43.34	1.0			WATER VALVE	HMA ADJUSTMENT
US 45	57+69.83	LT.	42.72	1.0			WATER VALVE	HMA ADJUSTMENT
US 45	57+65.23	LT.	42.76	1.0			WATER VALVE	HMA ADJUSTMENT
US 45	57+06.59	LT.	61.74		1.0		MANHOLE	HMA ADJUSTMENT
US 45	56+73.79	LT.	35.03		1.0		MANHOLE	HMA ADJUSTMENT
US 45	55+59.54	LT.	33.05		1.0		MANHOLE	HMA ADJUSTMENT
US 45	53+48.76	LT.	32.84		1.0		MANHOLE	HMA ADJUSTMENT
US 45	45+87.07	LT.	36.26	1.0			WATER VALVE	SIDEWALK ADJUSTMENT
US 45	40+46.02	LT.	48.16	1.0			WATER VALVE	SIDEWALK ADJUSTMENT
US 45	40+40.07	LT.	16.69	1.0			WATER VALVE	HMA ADJUSTMENT
US 45	40+15.03	LT.	63.34		1.0		MANHOLE	HMA ADJUSTMENT
US 45	31+19.10	LT.	24.60	1.0			WATER VALVE	HMA ADJUSTMENT
US 45	30+56.83	LT.	25.62	1.0			WATER VALVE	HMA ADJUSTMENT
US 45	29+30.24	LT.	24.20	1.0			WATER VALVE	HMA ADJUSTMENT
US 45	27+80.50	LT.	29.09	1.0			WATER VALVE	HMA ADJUSTMENT
US 45	27+77.19	LT.	27.80	1.0			WATER VALVE	HMA ADJUSTMENT
US 45	26+58.77	LT.	13.58		1.0		MANHOLE	HMA ADJUSTMENT
US 45	26+13.41	LT.	57.52	1.0			WATER VALVE	SIDEWALK ADJUSTMENT
US 45	24+17.29	LT.	12.60		1.0		MANHOLE	HMA ADJUSTMENT
US 45	23+78.43	LT.	22.48	1.0			WATER VALVE	HMA ADJUSTMENT
US 45	23+62.58	LT.	20.28	1.0			WATER VALVE	HMA ADJUSTMENT
US 45	23+25.26	LT.	14.59		1.0		MANHOLE	HMA ADJUSTMENT
US 45	23+17.00	LT.	26.81	1.0			WATER VALVE	HMA ADJUSTMENT
US 45	20+39.90	LT.	15.80		1.0		MANHOLE	HMA ADJUSTMENT
US 45	20+36.42	LT.	22.08	1.0			WATER VALVE	HMA ADJUSTMENT
US 45	20+16.99	LT.	19.28		1.0		MANHOLE	HMA ADJUSTMENT
US 45	19+82.14	LT.	25.96	1.0			WATER VALVE	HMA ADJUSTMENT
US 45	15+55.65	LT.	17.66	1.0			WATER VALVE	HMA ADJUSTMENT
US 45	15+47.11	LT.	16.59	1.0			WATER VALVE	HMA ADJUSTMENT
US 45	15+41.51	LT.	19.68		1.0		MANHOLE	HMA ADJUSTMENT
US 45	14+91.25	LT.	26.89	1.0			WATER VALVE	HMA ADJUSTMENT
US 45	14+72.26	LT.	21.20	1.0			WATER VALVE	HMA ADJUSTMENT
US 45	01+65.95	LT.	21.64	1.0			WATER VALVE	HMA ADJUSTMENT
US 45	02+42.72	LT.	30.56		1.0		MANHOLE	HMA ADJUSTMENT
US 45	02+98.86	RT.	26.62		1.0		MANHOLE	HMA ADJUSTMENT
US 45	03+44.36	LT.	24.42		1.0		MANHOLE	HMA ADJUSTMENT
US 45	03+48.93	RT.	35.53		1.0		MANHOLE	HMA ADJUSTMENT
US 45	03+77.80	LT.	19.68	1.0			WATER VALVE	HMA ADJUSTMENT
US 45	03+84.59	LT.	22.70	1.0			WATER VALVE	HMA ADJUSTMENT
US 45	03+87.29	RT.	75.75		1.0		MANHOLE	HMA ADJUSTMENT
US 45	06+18.30	LT.	36.19	1.0			WATER VALVE	HMA ADJUSTMENT
US 45	06+27.88	LT.	40.54		1.0		MANHOLE	HMA ADJUSTMENT
US 45	06+57.36	LT.	8.49		1.0		MANHOLE	HMA ADJUSTMENT
		SUB-TOTAL 1 =		32.0	26.0	0.0		
				EACH	EACH	EACH		

56109210 WATER VALVES TO BE ADJUSTED (CONTINUED)

60300305 FRAMES AND LIDS TO BE ADJUSTED (CONTINUED)

Z0001110 GAS VALVE TO BE ADJUSTED (CONTINUED)

LOCATION	STATION	OFFSET (FT)		56109210 QUANTITY (EACH)	60300305 QUANTITY (EACH)	Z0001110 QUANTITY (EACH)	TYPE	COMMENTS
US 45	08+76.14	LT.	10.01		1.0		MANHOLE	HMA ADJUSTMENT
US 45	08+89.88	LT.	44.86		1.0		MANHOLE	HMA ADJUSTMENT
US 45	11+66.27	LT.	46.11	1.0			WATER VALVE	CURB & GUTTER ADJUST
US 45	11+84.22	LT.	36.04		1.0		MANHOLE	HMA ADJUSTMENT
US 45	12+00.68	LT.	38.59	1.0			WATER VALVE	HMA ADJUSTMENT
US 45	12+03.43	RT.	3.96		1.0		MANHOLE	HMA ADJUSTMENT
US 45	12+03.77	LT.	29.09		1.0		MANHOLE	HMA ADJUSTMENT
US 45	12+08.29	LT.	36.70	1.0			WATER VALVE	SIDEWALK ADJUSTMENT
US 45	13+36.78	LT.	25.88		1.0		MANHOLE	HMA ADJUSTMENT
US 45	13+44.99	RT.	8.54		1.0		MANHOLE	HMA ADJUSTMENT
US 45	14+82.27	LT.	26.20		1.0		MANHOLE	HMA ADJUSTMENT
US 45	15+14.02	LT.	31.67		1.0		MANHOLE	HMA ADJUSTMENT
US 45	15+14.17	LT.	7.60		1.0		MANHOLE	HMA ADJUSTMENT
US 45	15+36.79	RT.	7.14		1.0		MANHOLE	HMA ADJUSTMENT
US 45	15+48.94	LT.	34.33	1.0			WATER VALVE	SIDEWALK ADJUSTMENT
US 45	16+76.60	RT.	9.01		1.0		MANHOLE	HMA ADJUSTMENT
US 45	18+36.61	LT.	29.41	1.0			WATER VALVE	HMA ADJUSTMENT
US 45	18+61.75	LT.	2.67		1.0		MANHOLE	HMA ADJUSTMENT
US 45	18+74.95	RT.	12.53		1.0		MANHOLE	HMA ADJUSTMENT
US 45	18+78.76	LT.	25.68		1.0		MANHOLE	HMA ADJUSTMENT
US 45	19+10.14	LT.	18.23	1.0			WATER VALVE	HMA ADJUSTMENT
US 45	20+41.82	LT.	23.23		1.0		MANHOLE	HMA ADJUSTMENT
US 45	20+96.33	LT.	25.32			1.0	GAS VALVE	HMA ADJUSTMENT
US 45	21+40.73	LT.	0.51		1.0		MANHOLE	HMA ADJUSTMENT
US 45	21+54.99	LT.	25.35			1.0	GAS VALVE	HMA ADJUSTMENT
US 45	21+66.99	LT.	25.86			1.0	GAS VALVE	HMA ADJUSTMENT
US 45	23+21.22	LT.	25.20			1.0	GAS VALVE	HMA ADJUSTMENT
US 45	23+32.98	LT.	18.79	1.0			WATER VALVE	HMA ADJUSTMENT
US 45	23+60.40	LT.	20.29	1.0			WATER VALVE	HMA ADJUSTMENT
US 45	23+67.21	LT.	23.34		1.0		MANHOLE	HMA ADJUSTMENT
US 45	24+40.08	LT.	0.47		1.0		MANHOLE	HMA ADJUSTMENT
US 45	24+71.39	RT.	15.64		1.0		MANHOLE	HMA ADJUSTMENT
US 45	24+89.81	LT.	24.81			1.0	GAS VALVE	HMA ADJUSTMENT
US 45	26+04.41	LT.	16.01	1.0			WATER VALVE	HMA ADJUSTMENT
US 45	26+07.43	LT.	14.71	1.0			WATER VALVE	HMA ADJUSTMENT
US 45	26+28.31	LT.	17.04		1.0		MANHOLE	HMA ADJUSTMENT
US 45	26+34.99	LT.	26.09			1.0	GAS VALVE	HMA ADJUSTMENT
US 45	26+36.49	LT.	0.32		1.0		MANHOLE	HMA ADJUSTMENT
US 45	26+41.57	RT.	11.98		1.0		MANHOLE	HMA ADJUSTMENT
US 45	26+58.64	LT.	14.45	1.0			WATER VALVE	HMA ADJUSTMENT
US 45	26+60.71	LT.	0.65		1.0		MANHOLE	HMA ADJUSTMENT
US 45	26+61.24	RT.	18.97		1.0		MANHOLE	HMA ADJUSTMENT
US 45	26+70.86	LT.	16.11	1.0			WATER VALVE	HMA ADJUSTMENT
US 45	26+76.24	LT.	14.44	1.0			WATER VALVE	HMA ADJUSTMENT
US 45	26+79.99	LT.	26.74			1.0	GAS VALVE	HMA ADJUSTMENT
US 45	38+17.03	LT.	21.46	1.0			WATER VALVE	HMA ADJUSTMENT
US 45	38+98.31	LT.	0.39		1.0		MANHOLE	HMA ADJUSTMENT
US 45	39+08.27	RT.	24.34		1.0		MANHOLE	HMA ADJUSTMENT
US 45	40+42.99	LT.	29.03			1.0	GAS VALVE	CURB & GUTTER ADJUST
US 45	40+74.04	LT.	23.23	1.0			WATER VALVE	HMA ADJUSTMENT
US 45	40+89.67	LT.	36.59			1.0	GAS VALVE	HMA ADJUSTMENT
US 45	40+99.47	LT.	23.18		1.0		MANHOLE	HMA ADJUSTMENT
US 45	40+99.79	RT.	23.28		1.0		MANHOLE	HMA ADJUSTMENT
US 45	41+18.77	LT.	0.96		1.0		MANHOLE	HMA ADJUSTMENT
US 45	41+29.76	RT.	12.94		1.0		MANHOLE	HMA ADJUSTMENT
US 45	41+37.88	LT.	23.49		1.0		MANHOLE	HMA ADJUSTMENT
US 45	41+40.85	LT.	32.68	1.0			WATER VALVE	HMA ADJUSTMENT
US 45	43+13.66	RT.	18.24		1.0		MANHOLE	HMA ADJUSTMENT
		SUB-TOTAL 2 =		16.0	33.0	9.0		
				EACH	EACH	EACH		

SCHEDULE OF QUANTITIES

56109210 WATER VALVES TO BE ADJUSTED (CONTINUED)

60300305 FRAMES AND LIDS TO BE ADJUSTED (CONTINUED)

Z0001110 GAS VALVE TO BE ADJUSTED (CONTINUED)

LOCATION	STATION	OFFSET (FT)		56109210 QUANTITY (EACH)	60300305 QUANTITY (EACH)	Z0001110 QUANTITY (EACH)	TYPE	COMMENTS
US 45	43+25.71	LT.	18.48		1.0		MANHOLE	HMA ADJUSTMENT
US 45	44+11.43	RT.	19.63		1.0		MANHOLE	HMA ADJUSTMENT
US 45	45+12.53	RT.	19.29		1.0		MANHOLE	HMA ADJUSTMENT
US 45	45+24.95	LT.	0.59		1.0		MANHOLE	HMA ADJUSTMENT
US 45	45+45.57	RT.	21.94	1.0			WATER VALVE	HMA ADJUSTMENT
US 45	46+20.04	LT.	14.92	1.0			WATER VALVE	HMA ADJUSTMENT
US 45	46+35.38	LT.	21.36		1.0		MANHOLE	HMA ADJUSTMENT
US 45	46+37.01	RT.	20.25		1.0		MANHOLE	HMA ADJUSTMENT
US 45	46+53.69	LT.	0.23		1.0		MANHOLE	HMA ADJUSTMENT
US 45	46+70.18	LT.	22.85		1.0		MANHOLE	HMA ADJUSTMENT
		SUB-TOTAL 3 =		2.0	8.0	0.0		
				EACH	EACH	EACH		

	56109210 QUANTITY (EACH)	60300305 QUANTITY (EACH)	Z0001110 QUANTITY (EACH)
SUB TOTAL 1 =	32.0	26.0	0.0
SUB-TOTAL 2 =	16.0	33.0	9.0
SUB-TOTAL 3 =	2.0	8.0	0.0
TOTAL =	50.0	67.0	9.0
	EACH	EACH	EACH

78300202 PAVEMENT MARKING REMOVAL - WATER BLASTING

LOCATION			SYMBOL	OFFSET (FT)	LENGTH (FT)	78300202 QUANTITY (SQ FT)
ARBOURS DR.	LT.	107+48.00	STOP BAR	64.5	15.0	30.0
DUNLAP CT.	LT.	95+58.50	STOP BAR	60.0	12.0	24.0
COLLEGE PARK CT.	LT.	88+55.20	STOP BAR	63.0	12.0	24.0
KNOLLWOOD DR.	RT.	70+16.00	STOP BAR	50.0	16.0	32.0
GREEN ST.	RT.	41+18.60	CROSSWALK	37.3	91.0	45.5
GREEN ST.	RT.	41+18.60	CROSSWALK	46.8	74.0	37.0
GREEN ST.	RT.	41+18.60	STOP BAR	52.0	17.0	34.0
GREEN ST.	RT.	41+18.60	STOP BAR	58.0	12.0	24.0
					TOTAL =	220.5
						221.0
						SQ FT

X8140115 HANDHOLE TO BE ADJUSTED

LOCATION			STATION	OFFSET (FT)		X8140115 HANDHOLE TO BE ADJUSTED (EACH)
52	JOHN STREET	S.E. QUADRANT	26+25.37	RT.	32.84	1.0
50	JOHN STREET	N.E. QUADRANT	37+15.31	RT.	30.30	1.0
				TOTAL =		2.0
						EACH

NOTE:
SEE TRAFFIC SIGNAL BILL OF MATERIALS FOR ADDITIONAL HANDHOLES TO BE ADJUSTED.

XZ193400 SURVEY MARKER, TYPE 2 (SPECIAL)

Z0070202 SURVEY MARKER VAULT

LOCATION	STATION	OFFSET (FT)		TYPE	XZ193400 QUANTITY (EACH)	Z0070202 QUANTITY (EACH)
US 45	133+35.53 (BK)	C.L.	0.00	P.O.T. / STA EQ.	1.0	
US 45	127+75.21	C.L.	0.00	P.I.	1.0	
US 45	122+33.21	C.L.	0.00	P.I.	1.0	
US 45	116+11.14	C.L.	0.00	P.I.	1.0	
US 45	96+45.16	C.L.	0.00	P.I.	1.0	
US 45	86+08.42	C.L.	0.00	P.I.	1.0	
US 45	85+77.54	C.L.	0.00	P.O.T.		1.0
US 45	81+35.26 (BK)	C.L.	0.00	P.T. / STA. EQ.	1.0	
US 45	79+24.52	RT.	2.41	P.I.		1.0
US 45	77+13.71	C.L.	0.00	P.R.C.	1.0	
US 45	75+10.70	LT	2.22	P.I.		1.0
US 45	73+07.62	C.L.	0.00	P.C.	1.0	
US 45	67+41.91	C.L.	0.00	P.I.		1.0
US 45	60+61.26	C.L.	0.00	P.I.	1.0	
US 45	47+11.85 (BK)	C.L.	0.00	P.O.T / STA EQ	1.0	
US 45	43+44.72 (BK)	C.L.	0.00	P.T. / STA. EQ.	1.0	
US 45	41+66.88	LT	2.28	P.I.	1.0	
US 45	39+88.96	C.L.	0.00	P.R.C.	1.0	
US 45	38+26.47	RT.	1.89	P.I.	1.0	
US 45	36+63.92	C.L.	0.00	P.C.	1.0	
US 45	32+87.70	C.L.	0.00	P.I.	1.0	
US 45	26+66.47	C.L.	0.00	P.O.T.	1.0	
US 45	26+68.23	C.L.	0.00	P.I.	1.0	
US 45	21+01.26	C.L.	0.00	P.I.	1.0	
US 45	00+00.00	C.L.	0.00	P.O.T.	1.0	
US 45	00+37.69	C.L.	0.00	P.C.	1.0	
US 45	02+42.67	LT	3.66	P.I.	1.0	
US 45	04+47.48	C.L.	0.00	P.R.C.	1.0	
US 45	18+16.31	C.L.	0.00	P.R.C.	1.0	
US 45	19+24.88	LT	1.02	P.I.	1.0	
US 45	20+33.42 (BK)	C.L.	0.00	P.T./STA. EQ.	1.0	
US 45	26+81.14 (BK)	C.L.	0.00	P.O.T./STA. EQ.	1.0	
US 45	45+02.68	C.L.	0.00	P.I.	1.0	
				TOTAL =	29.0	4.0
					EACH	EACH

SCHEDULE OF QUANTITIES

SODDING & SEEDING SCHEDULE

LOCATION		AREA (SQ FT)	25200110 SODDING, SALT TOLERANT (SQ YD)	25000310 SEEDING, CLASS 4 (ACRE)	25000322 SEEDING, CLASS 5A (ACRE)	25000400 NITROGEN FERTILIZER NUTRIENT (POUND)	25000500 PHOSPHORUS FERTILIZER NUTRIENT (POUND)	25000600 POTASSIUM FERTILIZER NUTRIENT (POUND)	28000250 TEMPORARY EROSION CONTROL SEEDING (POUND)	25100115 MULCH, METHOD 2 (ACRE)	25200200 SUPPLEMENTAL WATERING 3 GAL / SQ YD 4 APPLICATIONS (UNIT)
CURTIS RD.	N.W. QUADRANT	234 0	26.00			0.32	0.32	0.32	1.61		0.31
CURTIS RD.	N.E. QUADRANT	160 0	17.78			0.22	0.22	0.22	1.10		0.21
ARBOUR TOWNE PL.	N.W. QUADRANT	168 0	18.67			0.23	0.23	0.23	1.16		0.22
ARBOUR TOWNE PL.	S.W. QUADRANT	532 0	59.11			0.73	0.73	0.73	3.66		0.71
ARBOUR TOWNE PL.	EAST SIDE OF US 45	2515 0		0.058	0.058	5.20	5.20	5.20	17.32	0.058	
BURWASH AVE.	N.W. QUADRANT	315 0	35.00			0.43	0.43	0.43	2.17		0.42
BURWASH AVE.	S.W. QUADRANT	576 0	64.00			0.79	0.79	0.79	3.97		0.77
BURWASH AVE.	EAST SIDE OF US 45	2400 0		0.055	0.055	4.96	4.96	4.96	16.53	0.055	
ARBOURS DR.	N.W. QUADRANT	216 0	24.00			0.30	0.30	0.30	1.49		0.29
ARBOURS DR.	S.W. QUADRANT	294 0	32.67			0.40	0.40	0.40	2.02		0.39
DUNLAP CT.	N.W. QUADRANT	355 0	39.44			0.49	0.49	0.49	2.44		0.47
DUNLAP CT.	S.W. QUADRANT	422 0	46.89			0.58	0.58	0.58	2.91		0.56
COLLEGE PARK CT.	N.W. QUADRANT	89 0	9.89			0.12	0.12	0.12	0.61		0.12
COLLEGE PARK CT.	S.W. QUADRANT	464 0	51.56			0.64	0.64	0.64	3.20		0.62
WINDSOR RD.	N.W. QUADRANT	907 0	100.78			1.25	1.25	1.25	6.25		1.21
WINDSOR RD.	S.W. QUADRANT	717 0	79.67			0.99	0.99	0.99	4.94		0.96
WINDSOR RD.	N.E. QUADRANT	357 0	39.67			0.49	0.49	0.49	2.46		0.48
WINDSOR RD.	S.E. QUADRANT	377 0	41.89			0.52	0.52	0.52	2.60		0.50
KNOLLWOOD DR.	N.W. QUADRANT	586 0	65.11			0.81	0.81	0.81	4.04		0.78
KNOLLWOOD DR.	N.E. QUADRANT	331 0	36.78			0.46	0.46	0.46	2.28		0.44
KNOLLWOOD DR.	S.W. QUADRANT	672 0	74.67			0.93	0.93	0.93	4.63		0.90
KNOLLWOOD DR.	S.E. QUADRANT	323 0	35.89			0.44	0.44	0.44	2.22		0.43
DEVONSHIRE DR.	S.W. QUADRANT	787 0	87.44			1.08	1.08	1.08	5.42		1.05
DEVONSHIRE DR.	EAST SIDE OF US 45	1212 0	134.67			1.67	1.67	1.67	8.35		1.62
CARRIAGE CENTER CT.	N.W. QUADRANT	63 0	7.00			0.09	0.09	0.09	0.43		0.08
CARRIAGE CENTER CT.	S.W. QUADRANT	118 0	13.11			0.16	0.16	0.16	0.81		0.16
FOX DR.	N.W. QUADRANT	350 0	38.89			0.48	0.48	0.48	2.41		0.47
FOX DR.	S.W. QUADRANT	355 0	39.44			0.49	0.49	0.49	2.44		0.47
ST. MARYS RD.	N.E. QUADRANT	310 0	34.44			0.43	0.43	0.43	2.13		0.41
ST. MARYS RD.	S.E. QUADRANT	522 0	58.00			0.72	0.72	0.72	3.60		0.70
KIRBY AVE.	N.W. QUADRANT	495 0	55.00			0.68	0.68	0.68	3.41		0.66
KIRBY AVE.	N.E. QUADRANT	440 0	48.89			0.61	0.61	0.61	3.03		0.59
KIRBY AVE.	S.W. QUADRANT	401 0	44.56			0.55	0.55	0.55	2.76		0.53
KIRBY AVE.	S.E. QUADRANT	177 0	19.67			0.24	0.24	0.24	1.22		0.24
BIRCH ST.	N.W. QUADRANT	239 0	26.56			0.33	0.33	0.33	1.65		0.32
BUENA VISTA DR.	N.W. QUADRANT	41 0	4.56			0.06	0.06	0.06	0.28		0.05
BUENA VISTA DR.	S.W. QUADRANT	151 0	16.78			0.21	0.21	0.21	1.04		0.20
HESSEL BLVD.	N.W. QUADRANT	539 0	59.89			0.74	0.74	0.74	3.71		0.72
HESSEL BLVD.	S.W. QUADRANT	478 0	53.11			0.66	0.66	0.66	3.29		0.64
STADIUM DR.	N.E. QUADRANT	120 0	13.33			0.17	0.17	0.17	0.83		0.16
STADIUM DR.	S.E. QUADRANT	234 0	26.00			0.32	0.32	0.32	1.61		0.31
AVONDALE AVE.	N.W. QUADRANT	277 0	30.78			0.38	0.38	0.38	1.91		0.37
AVONDALE AVE.	S.W. QUADRANT	269 0	29.89			0.37	0.37	0.37	1.85		0.36
ELLS AVE.	N.W. QUADRANT	88 0	9.78			0.12	0.12	0.12	0.61		0.12
ELLS AVE.	S.W. QUADRANT	290 0	32.22			0.40	0.40	0.40	2.00		0.39
STANAGE AVE.	N.W. QUADRANT	94 0	10.44			0.13	0.13	0.13	0.65		0.13
STANAGE AVE.	S.W. QUADRANT	185 0	20.56			0.25	0.25	0.25	1.27		0.25
CHARLES ST.	N.W. QUADRANT	264 0	29.33			0.36	0.36	0.36	1.82		0.35
CHARLES ST.	S.W. QUADRANT	406 0	45.11			0.56	0.56	0.56	2.80		0.54
WILLIAM ST.	S.W. QUADRANT	111 0	12.33			0.15	0.15	0.15	0.76		0.15
JOHN ST.	N.W. QUADRANT	31 0	3.44			0.04	0.04	0.04	0.21		0.04
JOHN ST.	N.E. QUADRANT	124 0	13.78			0.17	0.17	0.17	0.85		0.17
JOHN ST.	S.E. QUADRANT	175 0	19.44			0.24	0.24	0.24	1.21		0.23
GREEN ST.	N.W. QUADRANT	191 0	21.22			0.26	0.26	0.26	1.32		0.25
GREEN ST.	N.E. QUADRANT	36 0	4.00			0.05	0.05	0.05	0.25		0.05
GREEN ST.	S.W. QUADRANT	132 0	14.67			0.18	0.18	0.18	0.91		0.18
GREEN ST.	S.E. QUADRANT	41 0	4.56			0.06	0.06	0.06	0.28		0.05
HEALEY ST.	N.W. QUADRANT	268 0	29.78			0.37	0.37	0.37	1.85		0.36
HEALEY ST.	S.W. QUADRANT	197 0	21.89			0.27	0.27	0.27	1.36		0.26
	TOTAL =	23221 0	2034.00	0.11	0.11	35.37	35.37	35.37	159.92	0.11	24.41
	USE =	23221 0	2034.00	0.25	0.25	36.00	36.00	36.00	160.00	0.25	25.00
			SQ YD	ACRE	ACRE	POUND	POUND	POUND	POUND	ACRE	UNIT

NOTES:

1) TEMPORARY EROSION CONTROL SEEDING IS CALCULATED FOR 3 APPLICATIONS AT 100 LB / ACRE.

2) SUPPLEMENTAL WATERING IS CALCULATED FOR 4 APPLICATONS AT 3 GAL / SQ YD.

SCHEDULE OF QUANTITIES

78000200 THERMOPLASTIC PAVEMENT MARKING - LINE 4"

70300221 TEMPORARY PAVEMENT MARKING - LINE 4" - PAINT

78011025 GROOVING FOR RECESSED PAVEMENT MARKING 5"

LOCATION			STATION	TO	STATION	78000200 QUANTITY (FT)	70300221 QUANTITY (FT)	78011025 QUANTITY (FT)	COLOR
US 45	RT.	SKIP DASH	134+98.00		133+86.00	30.0	30.0	30.0	WHITE
US 45	RT.	RT. TURN LANE	134+98.00		133+86.00	112.0	112.0	112.0	WHITE
US 45	RT.	LT. TURN LANE	134+98.00		133+86.00	112.0	112.0	112.0	WHITE
US 45	RT.	MEDIAN	134+98.00		133+86.00	224.0	224.0	224.0	YELLOW
US 45	RT.	EOP	134+98.00		133+84.00	114.0	114.0	114.0	WHITE
US 45	LT.	SKIP DASH	134+98.00		133+84.00	30.0	30.0	30.0	WHITE
US 45	LT.	EOP	134+98.00		133+86.00	116.0	116.0	116.0	WHITE
US 45	RT.	SKIP DASH	132+76.00		123+93.00	240.0	240.0	240.0	WHITE
US 45	LT.	SKIP DASH	132+74.00		123+91.00	240.0	240.0	240.0	WHITE
US 45	RT.	MEDIAN	132+74.00		130+96.00	356.0	356.0	356.0	YELLOW
US 45	RT. & LT.	TWLTL - SOLID	130+96.00		125+81.00	1030.0	1030.0	1030.0	YELLOW
US 45	RT. & LT.	TWLTL - SKIP	130+96.00		125+81.00	260.0	260.0	260.0	YELLOW
US 45	LT.	MEDIAN	125+81.00		123+93.00	376.0	376.0	376.0	YELLOW
US 45	LT.	RT. TURN LANE	132+74.00		131+46.00	128.0	128.0	128.0	WHITE
US 45	LT.	LT. TURN LANE	132+74.00		131+76.00	98.0	98.0	98.0	WHITE
US 45	LT.	LT. TURN LANE	125+21.00		123+93.00	128.0	128.0	128.0	WHITE
US 45	RT	EOP	132+77.00		123+44.00	935.0	935.0	935.0	WHITE
US 45	LT.	EOP	132+74.00		124+10.00	868.0	868.0	868.0	WHITE
US 45	RT.	SKIP DASH	122+85.00		115+11.00	210.0	210.0	210.0	WHITE
US 45	LT.	SKIP DASH	122+83.00		115+09.00	210.0	210.0	210.0	WHITE
US 45	LT.	RT. TURN LANE	122+84.00		119+20.00	364.0	364.0	364.0	WHITE
US 45	RT. & LT.	TWLTL - SOLID	122+83.00		116+69.00	1228.0	1228.0	1228.0	YELLOW
US 45	RT. & LT.	TWLTL - SKIP	122+83.00		116+69.00	320.0	320.0	320.0	YELLOW
US 45	LT.	MEDIAN	116+69.00		115+11.00	316.0	316.0	316.0	YELLOW
US 45	RT.	LT. TURN LANE	116+09.00		115+11.00	98.0	98.0	98.0	WHITE
US 45	RT.	EOP	123+44.00		114+59.00	885.0	885.0	885.0	WHITE
US 45	LT.	EOP	122+85.00		114+92.00	795.0	795.0	795.0	WHITE
US 45	RT.	SKIP DASH	113+96.00		107+48.00	170.0	170.0	170.0	WHITE
US 45	LT.	SKIP DASH	113+94.00		107+48.00	170.0	170.0	170.0	WHITE
US 45	RT. & LT.	TWLTL - SOLID	113+94.00		107+92.00	1204.0	1204.0	1204.0	YELLOW
US 45	RT. & LT.	TWLTL - SKIP	113+94.00		107+92.00	340.0	340.0	340.0	YELLOW
US 45	LT.	RT. TURN LANE	113+94.00		112+88.00	106.0	106.0	106.0	WHITE
US 45	RT.	EOP	114+59.00		107+48.00	711.0	711.0	711.0	WHITE
US 45	LT.	EOP	114+14.00		107+74.00	642.0	642.0	642.0	WHITE
US 45	RT.	SKIP DASH	107+48.00		95+58.50	300.0	300.0	300.0	WHITE
US 45	LT.	SKIP DASH	107+48.00		95+58.50	300.0	300.0	300.0	WHITE
US 45	RT. & LT.	TWLTL - SOLID	107+00.00		95+93.00	2214.0	2214.0	2214.0	YELLOW
US 45	RT. & LT.	TWLTL - SKIP	107+00.00		95+93.00	580.0	580.0	580.0	YELLOW
US 45	RT.	EOP	107+48.00		95+58.50	1189.5	1189.5	1189.5	WHITE
US 45	LT.	EOP	107+18.00		95+82.00	1140.0	1140.0	1140.0	WHITE
US 45	RT.	SKIP DASH	95+58.50		88+55.20	180.0	180.0	180.0	WHITE
US 45	LT.	SKIP DASH	95+58.50		88+55.20	180.0	180.0	180.0	WHITE
US 45	RT. & LT.	TWLTL - SOLID	95+21.00		88+90.00	1262.0	1262.0	1262.0	YELLOW
US 45	RT. & LT.	TWLTL - SKIP	95+21.00		88+90.00	340.0	340.0	340.0	YELLOW
US 45	RT.	EOP	95+58.50		88+55.20	703.3	703.3	703.3	WHITE
US 45	LT.	EOP	95+34.00		88+78.00	659.0	659.0	659.0	WHITE
US 45	RT.	SKIP DASH	88+55.20		81+35.00 (AH)	190.0	190.0	190.0	WHITE
US 45	RT.	SKIP DASH	81+35.26 (BK)		80+78.00	30.0	30.0	30.0	WHITE
US 45	LT.	SKIP DASH	88+55.20		81+35.00 (AH)	200.0	200.0	200.0	WHITE
US 45	LT.	SKIP DASH	81+35.26 (BK)		80+76.00	30.0	30.0	30.0	WHITE
US 45	RT. & LT.	TWLTL - SOLID	88+18.00		84+06.00	824.0	824.0	824.0	YELLOW
US 45	RT. & LT.	TWLTL - SKIP	88+18.00		84+06.00	220.0	220.0	220.0	YELLOW
US 45	LT.	MEDIAN	84+06.00		81+35.00 (AH)	542.0	542.0	542.0	YELLOW
US 45	LT.	MEDIAN	81+35.26 (BK)		80+78.00	114.5	114.5	114.5	YELLOW
US 45	RT.	LT. TURN LANE	82+66.00		81+35.00 (AH)	131.0	131.0	131.0	WHITE
US 45	RT.	LT. TURN LANE	81+35.26 (BK)		80+78.00	57.3	57.3	57.3	WHITE
US 45	RT.	RT. TURN LANE	81+94.00		81+35.00 (AH)	59.0	59.0	59.0	WHITE
US 45	RT.	RT. TURN LANE	81+35.26 (BK)		80+78.00	57.3	57.3	57.3	WHITE
US 45	RT.	EOP	88+55.20		81+35.00 (AH)	720.2	720.2	720.2	WHITE
US 45	RT.	EOP	81+35.26 (BK)		80+82.00	53.3	53.3	53.3	WHITE
US 45	LT.	EOP	88+30.00		81+35.00 (AH)	697.0	697.0	697.0	WHITE
US 45	LT.	EOP	81+35.26 (BK)		80+80.00	58.0	58.0	58.0	WHITE
					SUB-TOTAL 1 =	26197.3	26197.3	26197.3	
						FT	FT	FT	

78000200 THERMOPLASTIC PAVEMENT MARKING - LINE 4"

70300221 TEMPORARY PAVEMENT MARKING - LINE 4" - PAINT (CONTINUED)

78011025 GROOVING FOR RECESSED PAVEMENT MARKING 5" (CONTINUED)

LOCATION			STATION	TO	STATION	78000200 QUANTITY (FT)	70300221 QUANTITY (FT)	78011025 QUANTITY (FT)	COLOR
US 45	RT.	SKIP DASH	79+33.00		70+72.00	230.0	230.0	230.0	WHITE
US 45	LT.	SKIP DASH	79+31.00		70+70.00	230.0	230.0	230.0	WHITE
US 45	RT.	MEDIAN	79+31.00		75+64.00	734.0	734.0	734.0	YELLOW
US 45	LT.	LT. TURN LANE	79+31.00		77+14.00	217.0	217.0	217.0	WHITE
US 45	LT.	RT. TURN LANE	79+31.00		75+78.00	353.0	353.0	353.0	WHITE
US 45	RT. & LT.	TWLTL - SOLID	75+64.00		72+30.00	668.0	668.0	668.0	YELLOW
US 45	RT. & LT.	TWLTL - SKIP	75+64.00		72+30.00	180.0	180.0	180.0	YELLOW
US 45	LT.	MEDIAN	72+30.00		70+72.00	316.0	316.0	316.0	YELLOW
US 45	RT.	LT. TURN LANE	71+70.00		70+72.00	98.0	98.0	98.0	WHITE
US 45	RT.	SKIP DASH	69+62.00		58+16.00	300.0	300.0	300.0	WHITE
US 45	LT.	SKIP DASH	69+60.00		58+14.00	300.0	300.0	300.0	WHITE
US 45	RT.	MEDIAN	69+60.00		68+02.00	316.0	316.0	316.0	YELLOW
US 45	LT.	LT. TURN LANE	69+60.00		68+62.00	98.0	98.0	98.0	WHITE
US 45	RT. & LT.	TWLTL - SOLID	68+02.00		59+74.00	1656.0	1656.0	1656.0	YELLOW
US 45	RT. & LT.	TWLTL - SKIP	68+02.00		59+74.00	420.0	420.0	420.0	YELLOW
US 45	LT.	MEDIAN	59+74.00		58+16.00	316.0	316.0	316.0	YELLOW
US 45	RT.	LT. TURN LANE	59+14.00		58+16.00	98.0	98.0	98.0	WHITE
US 45	RT.	SKIP DASH	56+78.00		51+72.20	130.0	130.0	130.0	WHITE
US 45	LT.	SKIP DASH	56+76.00		51+72.20	130.0	130.0	130.0	WHITE
US 45	RT.	MEDIAN	56+76.00		55+18.00	316.0	316.0	316.0	YELLOW
US 45	LT.	LT. TURN LANE	56+76.00		55+78.00	98.0	98.0	98.0	WHITE
US 45	RT. & LT.	TWLTL - SOLID	55+18.00		52+14.00	608.0	608.0	608.0	YELLOW
US 45	RT. & LT.	TWLTL - SKIP	55+18.00		52+14.00	160.0	160.0	160.0	YELLOW
US 45	LT.	RT. TURN LANE	56+76.00		54+92.00	184.0	184.0	184.0	WHITE
US 45	RT.	SKIP DASH	51+72.20		47+12.48 (AH)	120.0	120.0	120.0	WHITE
US 45	LT.	SKIP DASH	51+72.20		47+12.48 (AH)	120.0	120.0	120.0	WHITE
US 45	RT.	SKIP DASH	47+11.85 (BK)		46+05.00	30.0	30.0	30.0	WHITE
US 45	LT.	SKIP DASH	47+11.85 (BK)		46+05.00	30.0	30.0	30.0	WHITE
US 45	RT. & LT.	TWLTL - SOLID	51+18.00		47+12.48 (AH)	811.0	811.0	811.0	YELLOW
US 45	RT. & LT.	TWLTL - SKIP	51+18.00		47+12.48 (AH)	220.0	220.0	220.0	YELLOW
US 45	RT. & LT.	TWLTL - SOLID	47+11.85 (BK)		46+42.00	139.7	139.7	139.7	YELLOW
US 45	RT. & LT.	TWLTL - SKIP	47+11.85 (BK)		46+42.00	60.0	60.0	60.0	YELLOW
US 45	RT.	SKIP DASH	46+05.00		43+44.41 (AH)	70.0	70.0	70.0	WHITE
US 45	LT.	SKIP DASH	46+05.00		43+44.41 (AH)	70.0	70.0	70.0	WHITE
US 45	RT.	SKIP DASH	43+44.72 (BK)		40+61.00	90.0	90.0	90.0	WHITE
US 45	LT.	SKIP DASH	43+44.72 (BK)		40+59.00	90.0	90.0	90.0	WHITE
US 45	RT. & LT.	TWLTL - SOLID	45+72.00		43+44.41 (AH)	455.2	455.2	455.2	YELLOW
US 45	RT. & LT.	TWLTL - SKIP	45+72.00		43+44.41 (AH)	120.0	120.0	120.0	YELLOW
US 45	RT. & LT.	TWLTL - SOLID	43+44.72 (BK)		42+89.00	111.4	111.4	111.4	YELLOW
US 45	RT. & LT.	TWLTL - SKIP	43+44.72 (BK)		42+89.00	40.0	40.0	40.0	YELLOW
US 45	LT.	MEDIAN	42+89.00		40+61.00	456.0	456.0	456.0	YELLOW
US 45	RT.	LT. TURN LANE	41+89.00		40+61.00	128.0	128.0	128.0	WHITE
US 45	RT.	RT. TURN LANE	41+56.00		40+61.00	95.0	95.0	95.0	WHITE
US 45	RT.	SKIP DASH	39+37.00		27+30.00	320.0	320.0	320.0	WHITE
US 45	LT.	SKIP DASH	39+35.00		27+30.00	320.0	320.0	320.0	WHITE
US 45	RT.	MEDIAN	39+35.00		37+77.00	316.0	316.0	316.0	YELLOW
US 45	LT.	LT. TURN LANE	39+35.00		38+37.00	98.0	98.0	98.0	WHITE
US 45	RT. & LT.	TWLTL - SOLID	37+77.00		29+90.00	1574.0	1574.0	1574.0	YELLOW
US 45	RT. & LT.	TWLTL - SKIP	37+77.00		29+90.00	400.0	400.0	400.0	YELLOW
US 45	LT.	MEDIAN	29+90.00		27+32.00	516.0	516.0	516.0	YELLOW
US 45	RT.	LT. TURN LANE	29+30.00		27+32.00	198.0	198.0	198.0	WHITE
US 45	RT.	SKIP DASH	25+95.00		20+02.50	150.0	150.0	150.0	WHITE
US 45	LT.	SKIP DASH	25+97.00		20+02.50	150.0	150.0	150.0	WHITE
US 45	RT.	MEDIAN	25+95.00		23+50.00	490.0	490.0	490.0	YELLOW
US 45	LT.	LT. TURN LANE	25+95.00		24+57.00	138.0	138.0	138.0	WHITE
US 45	LT.	RT. TURN LANE	25+97.00		24+93.00	104.0	104.0	104.0	WHITE
US 45	RT. & LT.	TWLTL - SOLID	23+50.00		20+44.00	612.0	612.0	612.0	YELLOW
US 45	RT. & LT.	TWLTL - SKIP	23+50.00		20+44.00	160.0	160.0	160.0	YELLOW
US 45	RT.	SKIP DASH	20+02.50		15+12.80	130.0	130.0	130.0	WHITE
US 45	LT.	SKIP DASH	20+02.50		15+12.80	130.0	130.0	130.0	WHITE
US 45	RT. & LT.	TWLTL - SOLID	19+71.00		17+14.00	514.0	514.0	514.0	YELLOW
					SUB-TOTAL 2 =	17732.4	17732.4	17732.4	
						FT	FT	FT	

MODEL: $MODEL$NAME5
FILE NAME: pw:\\illinois-pw.bentley.com:PWIDOT\Documents\IDOT Offices\District 5\Projects\D570991\CADData\CADsheets\D570991-sht-Schedule.dgn

USER NAME = Greg.Eaglin	DESIGNED -	REVISED -	
	DRAWN -	REVISED -	
PLOT SCALE = 40.0000 ' / in.	CHECKED -	REVISED -	
PLOT DATE = 6/26/2024	DATE -	REVISED -	

STATE OF ILLINOIS
DEPARTMENT OF TRANSPORTATION

SCHEDULE OF QUANTITIES

SCALE: | SHEET 17 OF 24 SHEETS | STA. TO STA.

F.A.P. RTE.	SECTION	COUNTY	TOTAL SHEETS	SHEET NO.
804	25RS-6	CHAMPAIGN	306	48
		CONTRACT NO. 70991		
		ILLINOIS FED. AID PROJECT		

SCHEDULE OF QUANTITIES

78000200 THERMOPLASTIC PAVEMENT MARKING - LINE 4"

70300221 TEMPORARY PAVEMENT MARKING - LINE 4" - PAINT (CONTINUED)

78011025 GROOVING FOR RECESSED PAVEMENT MARKING 5" (CONTINUED)

LOCATION			STATION	TO	STATION	78000200 QUANTITY (FT)	70300221 QUANTITY (FT)	78011025 QUANTITY (FT)	COLOR
US 45	RT. & LT.	TWLTL - SKIP	19+71.00		17+14.00	140.0	140.0	140.0	YELLOW
US 45	LT.	MEDIAN	17+14.00		15+54.00	320.0	320.0	320.0	YELLOW
US 45	RT.	LT. TURN LANE	16+54.00		15+54.00	100.0	100.0	100.0	WHITE
US 45	RT.	SKIP DASH	15+12.80		13+30.18 (BK)	50.0	50.0	50.0	WHITE
US 45	LT.	SKIP DASH	15+12.80		13+30.18 (BK)	50.0	50.0	50.0	WHITE
US 45	RT. & LT.	TWLTL - SOLID	14+76.00		13+30.18 (BK)	291.6	291.6	291.6	YELLOW
US 45	RT. & LT.	TWLTL - SKIP	14+76.00		13+30.18 (BK)	80.0	80.0	80.0	YELLOW
US 45	RT.	SKIP DASH	0+00.00 (AH)		2+89.00	90.0	90.0	90.0	WHITE
US 45	LT.	SKIP DASH	0+00.00 (AH)		2+74.00	80.0	80.0	80.0	WHITE
US 45	RT. & LT.	TWLTL - SOLID	0+00.00 (AH)		0+80.50	161.0	161.0	161.0	YELLOW
US 45	RT. & LT.	TWLTL - SKIP	0+00.00 (AH)		0+80.50	60.0	60.0	60.0	YELLOW
US 45	LT.	MEDIAN	0+80.50		2+75.00	389.0	389.0	389.0	YELLOW
US 45	RT.	LT. TURN LANE	1+50.50		2+82.00	131.5	131.5	131.5	WHITE
US 45	RT.	SKIP DASH	4+09.00		6+34.30	60.0	60.0	60.0	WHITE
US 45	LT.	SKIP DASH	3+97.00		6+34.30	60.0	60.0	60.0	WHITE
US 45	RT.	MEDIAN	4+09.00		5+86.00	354.0	354.0	354.0	YELLOW
US 45	LT.	LT. TURN LANE	4+03.00		4+88.00	85.0	85.0	85.0	WHITE
US 45	LT.	LT. TURN LANE	5+38.00		5+86.00	48.0	48.0	48.0	WHITE
US 45	RT.	SKIP DASH	6+34.30		8+95.30	70.0	70.0	70.0	WHITE
US 45	LT.	SKIP DASH	6+34.30		8+95.30	70.0	70.0	70.0	WHITE
US 45	RT.	MEDIAN	6+61.00		7+56.00	200.0	200.0	200.0	YELLOW
US 45	LT.	MEDIAN	6+61.00		8+56.00	396.0	396.0	396.0	YELLOW
US 45	RT.	LT. TURN LANE	7+56.00		8+56.00	100.0	100.0	100.0	WHITE
US 45	RT.	SKIP DASH	8+95.30		11+87.00	80.0	80.0	80.0	WHITE
US 45	LT.	SKIP DASH	8+95.30		11+87.00	80.0	80.0	80.0	WHITE
US 45	RT.	MEDIAN	9+25.00		10+51.00	260.0	260.0	260.0	YELLOW
US 45	LT.	MEDIAN	9+25.00		11+51.00	458.0	458.0	458.0	YELLOW
US 45	RT.	LT. TURN LANE	10+51.00		11+51.00	100.0	100.0	100.0	WHITE
US 45	RT.	SKIP DASH	11+87.00		15+12.50	90.0	90.0	90.0	WHITE
US 45	LT.	SKIP DASH	11+87.00		15+12.50	90.0	90.0	90.0	WHITE
US 45	RT.	MEDIAN	12+21.00		13+76.00	318.0	318.0	318.0	YELLOW
US 45	LT.	MEDIAN	12+21.00		14+76.00	516.0	516.0	516.0	YELLOW
US 45	RT.	LT. TURN LANE	13+76.00		14+76.00	100.0	100.0	100.0	WHITE
US 45	RT.	SKIP DASH	15+12.50		18+60.20	90.0	90.0	90.0	WHITE
US 45	LT.	SKIP DASH	15+12.50		18+60.20	90.0	90.0	90.0	WHITE
US 45	RT. & LT.	TWLTL - SOLID	15+48.00		16+66.00	236.0	236.0	236.0	YELLOW
US 45	RT. & LT.	TWLTL - SKIP	15+48.00		16+66.00	60.0	60.0	60.0	YELLOW
US 45	LT.	MEDIAN	16+66.00		18+26.00	320.0	320.0	320.0	YELLOW
US 45	RT.	LT. TURN LANE	17+26.00		18+26.00	100.0	100.0	100.0	WHITE
US 45	RT.	SKIP DASH	18+60.20		20+33.42 (BK)	50.0	50.0	50.0	WHITE
US 45	RT.	SKIP DASH	20+31.70 (AH)		26+81.14 (BK)	170.0	170.0	170.0	WHITE
US 45	LT.	SKIP DASH	18+60.20		20+33.42 (BK)	50.0	50.0	50.0	WHITE
US 45	LT.	SKIP DASH	20+31.70 (AH)		26+81.14 (BK)	170.0	170.0	170.0	WHITE
US 45	RT. & LT.	TWLTL - SOLID	18+98.00		20+33.42 (BK)	270.8	270.8	270.8	YELLOW
US 45	RT. & LT.	TWLTL - SKIP	18+98.00		20+33.42 (BK)	40.0	40.0	40.0	YELLOW
US 45	RT. & LT.	TWLTL - SOLID	20+31.70 (AH)		24+55.00	846.6	846.6	846.6	YELLOW
US 45	RT. & LT.	TWLTL - SKIP	20+31.70 (AH)		24+55.00	110.0	110.0	110.0	YELLOW
US 45	LT.	MEDIAN	24+55.00		26+15.00	320.0	320.0	320.0	YELLOW
US 45	RT.	LT. TURN LANE	25+15.00		26+15.00	100.0	100.0	100.0	WHITE
US 45	RT.	SKIP DASH	37+10.00 (AH)		40+69.00	90.0	90.0	90.0	WHITE
US 45	LT.	SKIP DASH	37+10.00 (AH)		40+69.00	90.0	90.0	90.0	WHITE
US 45	RT. & LT.	TWLTL - SOLID	37+10.00 (AH)		39+11.00	402.0	402.0	402.0	YELLOW
US 45	RT. & LT.	TWLTL - SKIP	37+10.00 (AH)		39+11.00	120.0	120.0	120.0	YELLOW
US 45	LT.	MEDIAN	39+11.00		40+69.00	316.0	316.0	316.0	YELLOW
US 45	RT.	LT. TURN LANE	39+71.00		40+69.00	98.0	98.0	98.0	WHITE
US 45	RT.	SKIP DASH	41+65.00		46+53.10	130.0	130.0	130.0	WHITE
US 45	LT.	SKIP DASH	41+67.00		46+53.10	130.0	130.0	130.0	WHITE
US 45	LT.	MEDIAN	41+67.00		43+25.00	316.0	316.0	316.0	YELLOW
US 45	LT.	LT. TURN LANE	41+67.00		42+65.00	98.0	98.0	98.0	WHITE
US 45	C.L.	TWLTL - SOLID	43+25.00		44+66.00	282.0	282.0	282.0	YELLOW
US 45	C.L.	TWLTL - SKIP	43+25.00		44+66.00	80.0	80.0	80.0	YELLOW
					SUB-TOTAL 3 =	10653.6	10653.6	10653.6	
						FT	FT	FT	

78000200 THERMOPLASTIC PAVEMENT MARKING - LINE 4"

70300221 TEMPORARY PAVEMENT MARKING - LINE 4" - PAINT (CONTINUED)

78011025 GROOVING FOR RECESSED PAVEMENT MARKING 5" (CONTINUED)

LOCATION			STATION	TO	STATION	78000200 QUANTITY (FT)	70300221 QUANTITY (FT)	78011025 QUANTITY (FT)	COLOR
US 45	LT.	MEDIAN	44+66.00		46+20.00	308.0	308.0	308.0	YELLOW
US 45	RT.	LT. TURN LANE	45+26.00		46+20.00	94.0	94.0	94.0	WHITE
US 45	RT.	SKIP DASH	46+53.10		49+40.00	80.0	80.0	80.0	WHITE
US 45	LT.	SKIP DASH	46+53.10		49+42.00	80.0	80.0	80.0	WHITE
US 45	RT. & LT.	TWLTL - SOLID	46+88.00		47+62.00	148.0	148.0	148.0	YELLOW
US 45	RT. & LT.	TWLTL - SKIP	46+88.00		47+62.00	40.0	40.0	40.0	YELLOW
US 45	LT.	MEDIAN	47+62.00		49+40.00	356.0	356.0	356.0	YELLOW
US 45	RT.	LT. TURN LANE	48+32.00		49+40.00	108.0	108.0	108.0	WHITE
CURTIS RD. (LT.)		LT. TURN LANE	13+87.00		14+33.00	46.0	46.0	46.0	WHITE
CURTIS RD. (LT.)		MEDIAN	13+87.00		14+33.00	92.0	92.0	92.0	YELLOW
CURTIS RD. (RT.)		LT. TURN LANE	15+63.00		16+22.00	59.0	59.0	59.0	WHITE
CURTIS RD. (RT.)		MEDIAN	15+65.00		16+21.00	112.0	112.0	112.0	YELLOW
CURTIS RD. (RT.)		RAILROAD	15+63.00			41.0	41.0	41.0	WHITE
CURTIS RD. (RT.)		RAILROAD	15+74.00		15+84.00	22.0	22.0	22.0	WHITE
CURTIS RD. (RT.)		RT. EOP	15+45.00		16+20.00	84.0	84.0	84.0	WHITE
CURTIS RD. (RT.)		LT. EOP	15+55.00		16+23.00	80.0	80.0	80.0	WHITE
ARBOUR TOWNE PL. (LT.)		LT. C.L.	0+99.10		1+19.40	20.3	20.3	20.3	WHITE
ARBOUR TOWNE PL. (LT.)		RT. C.L.	0+76.20		1+17.20	41.0	41.0	41.0	WHITE
BURWASH AVE.		LT. C.L.	0+58.00		0+70.70	12.7	12.7	12.7	WHITE
BURWASH AVE.		RT. C.L.	0+53.00		0+70.70	17.7	17.7	17.7	WHITE
WINDSOR RD. (LT.)		RT. TURN LANE	0+64.00		0+92.00	28.0	28.0	28.0	WHITE
WINDSOR RD. (LT.)		RT. SKIP DASH	0+64.00		0+92.00	10.0	10.0	10.0	WHITE
WINDSOR RD. (LT.)		RT. MEDIAN	0+64.00		0+92.00	56.0	56.0	56.0	WHITE
WINDSOR RD. (LT.)		LT. MEDIAN	0+66.00		0+92.00	112.0	112.0	112.0	YELLOW
WINDSOR RD. (LT.)		LT. SKIP DASH	0+64.00		1+09.30	20.0	20.0	20.0	WHITE
WINDSOR RD. (RT.)		RT. SKIP DASH	0+55.00		1+07.50	20.0	20.0	20.0	WHITE
WINDSOR RD. (RT.)		RT. MEDIAN	0+51.00		1+07.50	103.0	103.0	103.0	YELLOW
WINDSOR RD. (RT.)		LT. MEDIAN	0+57.00		0+92.40	70.8	70.8	70.8	WHITE
WINDSOR RD. (RT.)		LT. SKIP DASH	0+57.00		0+92.40	10.0	10.0	10.0	WHITE
WINDSOR RD. (RT.)		RT. TURN LANE	0+57.00		0+92.40	35.4	35.4	35.4	WHITE
KNOLLWOOD DR (LT.)		RT. TURN LANE	0+61.00		1+12.50	51.5	51.5	51.5	WHITE
KNOLLWOOD DR (LT.)		LT. MEDIAN	0+61.00		1+12.50	103.0	103.0	103.0	YELLOW
DEVONSHIRE DR. (LT.)		RT. TURN LANE	0+64.00		1+21.20	57.2	57.2	57.2	WHITE
DEVONSHIRE DR. (LT.)		MEDIAN	0+64.00		1+21.20	114.4	114.4	114.4	YELLOW
FOX DR. (LT.)		LT. TURN LANE	0+57.50		0+91.90	34.4	34.4	34.4	WHITE
FOX DR. (LT.)		MEDIAN	0+57.50		0+91.90	68.8	68.8	68.8	YELLOW
KIRBY (LT.)		RT. TURN LANE	10+62.00		11+03.00	41.0	41.0	41.0	WHITE
KIRBY (LT.)		LT. TURN LANE	10+62.00		11+03.00	41.0	41.0	41.0	WHITE
KIRBY (LT.)		MEDIAN	10+56.00		11+03.00	94.0	94.0	94.0	YELLOW
KIRBY (LT.)		SKIP DASH	10+60.00		11+03.00	20.0	20.0	20.0	WHITE
KIRBY (RT.)		SKIP DASH	8+91.00		9+48.00	20.0	20.0	20.0	WHITE
KIRBY (RT.)		MEDIAN	8+91.00		9+52.00	126.0	126.0	126.0	YELLOW
KIRBY (RT.)		LT. TURN LANE	9+20.00		9+45.00	25.0	25.0	25.0	WHITE
KIRBY (RT.)		RT. TURN LANE	8+91.00		9+44.00	53.0	53.0	53.0	WHITE
HESSEL BLVD. (LT.)		LT. TURN LANE	0+77.00		1+50.30	73.3	73.3	73.3	WHITE
HESSEL BLVD. (LT.)		MEDIAN	0+69.00		1+50.30	162.6	162.6	162.6	YELLOW
STADIUM DR. (RT.)		MEDIAN	0+47.00		0+96.60	99.2	99.2	99.2	YELLOW
STADIUM DR. (RT.)		LT. TURN LANE	0+49.00		0+96.60	47.6	47.6	47.6	WHITE
GREEN ST. (LT.)		RT. TURN LANE	0+50.00		0+77.00	27.0	27.0	27.0	WHITE
GREEN ST. (LT.)		LT. TURN LANE	0+50.00		0+77.00	27.0	27.0	27.0	WHITE
GREEN ST. (LT.)		MEDIAN	0+50.00		0+77.00	54.0	54.0	54.0	YELLOW
					SUB-TOTAL 4 =	3646.9	3646.9	3646.9	

	78000200 QUANTITY (FT)	70300221 QUANTITY (FT)	78011025 QUANTITY (FT)
SUB-TOTAL 1 =	26197.3	26197.3	26197.3
SUB-TOTAL 2 =	17732.4	17732.4	17732.4
SUB-TOTAL 3 =	10653.6	10653.6	10653.6
SUB*TOTAL 4 =	3646.9	3646.9	3646.9
TOTAL =	58230.1	58230.1	58230.1
USE =	58231.0	58231.0	58231.0
	FT	FT	FT

SCHEDULE OF QUANTITIES

78000400 THERMOPLASTIC PAVEMENT MARKING - LINE 6"

78008330 POLYUREA PAVEMENT MARKING TYPE II - LINE 6"

70300241 TEMPORARY PAVEMENT MARKING - LINE 6" - PAINT

78011035 GROOVING FOR RECESSED PAVEMENT MARKING 7"

LOCATION		STATION	OFFSET (FT)	STATION	OFFSET (FT)	78000400 QUANTITY (FT)	78008330 QUANTITY (FT)	70300241 QUANTITY (FT)	78011035 QUANTITY (FT)	COLOR
US 45 AT CURTIS RD. / N. SIDE	CROSSWALK	132+82.59	RT. 50.32	132+91.61	LT. 52.10	203.0		203.0	203.0	WHITE
CURTIS RD. / LT. SIDE	CROSSWALK	132+91.61	LT. 52.10	133+87.64	LT. 50.65	183.0		183.0	183.0	WHITE
CURTIS RD. / RT. SIDE	RAILROAD	15+63.00	RT. 5.00	16+16.50	LT. 19.50	715.0		715.0	715.0	WHITE
ARBOUR TOWNE PL.	ISLAND	123+62.10	LT. 31.00	123+70.85	LT. 99.10	162.0		162.0	162.0	WHITE
ARBOUR TOWNE PL.	ISLAND	123+33.83	LT. 31.00	123+39.64	LT. 76.20	157.0		157.0	157.0	WHITE
ARBOUR TOWNE PL.	CROSSWALK	122+92.79	LT. 53.71	124+10.35	LT. 45.21	214.0		214.0	214.0	WHITE
BURWASH	CROSSWALK	114+12.54	LT. 49.95	114+84.56	LT. 46.00	134.0		134.0	134.0	WHITE
ARBOURS DR.	CROSSWALK	107+26.31	LT. 46.10	107+66.24	LT. 46.10	75.0		75.0	75.0	WHITE
DUNLAP CT.	CROSSWALK	95+42.71	LT. 46.00	95+73.79	LT. 46.00	57.0		57.0	57.0	WHITE
COLLEGE PARK CT.	CROSSWALK	88+35.11	LT. 41.62	88+73.43	LT. 41.54	69.0		69.0	69.0	WHITE
US 45 AT WINDSOR RD. / S. SIDE	CROSSWALK	80+59.69	RT. 52.28	80+67.63	LT. 49.69	201.0		201.0	201.0	WHITE
WINDSOR RD. / LT. SIDE	CROSSWALK	79+44.60	LT. 62.30	80+67.63	LT. 49.69	239.0		239.0	239.0	WHITE
US 45 AT KNOLLWOOD DR. / S. SIDE	CROSSWALK	70+56.02	RT. 31.17	70+62.92	LT. 47.09	158.0		158.0	158.0	WHITE
KNOLLWOOD DR.	CROSSWALK	69+74.90	LT. 42.94	70+62.92	LT. 47.09	166.0		166.0	166.0	WHITE
KNOLLWOOD DR.	CROSSWALK	69+79.33	RT. 40.17	70+45.08	RT. 42.60		121.0	121.0		WHITE
DEVONSHIRE DR.	CROSSWALK	56+89.16	LT. 54.93	57+81.03	LT. 42.63	168.0		168.0	168.0	WHITE
CARRIAGE CENTER CT.	CROSSWALK	45+87.85	LT. 33.76	46+32.64	LT. 33.82		88.0	88.0	88.0	WHITE
BIRCH ST.	CROSSWALK	19+85.94	LT. 36.15	20+40.87	LT. 29.00	95.0		95.0	95.0	WHITE
BUENA VISTA DR.	CROSSWALK	14+84.49	LT. 28.87	15+44.78	LT. 33.26	103.0		103.0	103.0	WHITE
HESSEL BLVD.	ISLAND	2+45.98	LT. 20.13	2+88.78	LT. 20.13	101.0		101.0	101.0	WHITE
AVONDALE AVE	CROSSWALK	6+05.47	LT. 40.13	6+42.05	LT. 43.11	67.0		67.0	67.0	WHITE
ELLS AVE.	CROSSWALK	8+74.63	LT. 47.22	9+03.76	LT. 47.73	55.0		55.0	55.0	WHITE
STANAGE AVE.	CROSSWALK	11+63.77	LT. 39.41	12+04.04	LT. 37.37	72.0		72.0	72.0	WHITE
CHARLES ST.	CROSSWALK	14+87.60	LT. 33.27	15+37.43	LT. 33.49	87.0		87.0	87.0	WHITE
WILLIAMS ST.	CROSSWALK	18+34.55	LT. 30.34	18+90.60	LT. 29.63	97.0		97.0	97.0	WHITE
JOHN ST. / RT. SIDE	CROSSWALK	26+27.34	RT. 28.43	26+74.91	RT. 27.96	80.0		80.0	80.0	WHITE
JOHN ST. / LT. SIDE	CROSSWALK	26+33.90	LT. 44.91	26+67.05	LT. 44.59		64.0	64.0	64.0	WHITE
HEALEY ST.	CROSSWALK	46+30.40	LT. 31.68	46+77.19	LT. 31.18	81.0		81.0	81.0	WHITE
					TOTAL =	3739.0	273.0	4012.0	3891.0	
						FT	FT	FT	FT	

NOTES:

POLYUREA PAVEMENT MARKINGS, TYPE II SHALL BE USED ON PCC PAVEMENT.

STATIONS SHOWN ON SIDEROADS WITHOUT CENTERLINE CONTROL ARE FOR REFERENCE ONLY.

SEE PAVEMENT MARKING PLAN SHEETS AND DISTRICT 5 DETAIL 7800AAAA FOR CONSTRUCTION LAYOUT.

DO NOT GROOVE CROSSWALK ON KNOLLWOOD DR. / EAST SIDE.

SCHEDULE OF QUANTITIES

78000600 THERMOPLASTIC PAVEMENT MARKING - LINE 12"

78008350 POLYUREA PAVEMENT MARKING TYPE II - LINE 12"

70300261 TEMPORARY PAVEMENT MARKING - LINE 12" - PAINT

78011065 GROOVING FOR RECESSED PAVEMENT MARKING 13"

LOCATION		STATION	OFFSET (FT)		TO	STATION	OFFSET (FT)		78000600 QUANTITY (FT)	78008350 QUANTITY (FT)	70300261 QUANTITY (FT)	78011065 QUANTITY (FT)	COLOR
ARBOUR TOWNE PL.	ISLAND	123+94.00	LT.	31.0		123+62.10	LT.	31.0	94.0		94.0	94.0	WHITE
ARBOUR TOWNE PL.	ISLAND	123+33.83	LT.	31.0		122+85.00	LT.	31.0	70.0		70.0	70.0	WHITE
WINDSOR RD.	MEDIAN	80+16.50	LT.	68.1		80+18.80	LT.	90.7	9.0		9.0	9.0	WHITE
WINDSOR RD.	MEDIAN	79+95.20	LT.	67.4		79+98.20	LT.	93.5	8.0		8.0	8.0	YELLOW
WINDSOR RD.	MEDIAN	79+83.80	RT.	55.3		79+79.00	RT.	90.5	11.0		11.0	11.0	WHITE
US 45 AT FOX DR. / N. SIDE	CROSSWALK	39+41.00	LT.	28.9		39+44.40	RT.	37.1	182.0		182.0	182.0	WHITE
FOX DR. / WEST SIDE	CROSSWALK	40+42.60	LT.	47.5		39+76.70	LT.	50.9	179.0		179.0	179.0	WHITE
US 45 AT KIRBY / S. SIDE	CROSSWALK	27+30.70	LT.	48.3		27+20.10	RT.	50.1	268.0		268.0	268.0	WHITE
KIRBY AVE. / EAST SIDE	CROSSWALK	27+13.40	RT.	56.2		26+05.00	RT.	53.1	300.0		300.0	300.0	WHITE
KIRBY AVE. / WEST SIDE	CROSSWALK	27+25.40	LT.	54.0		26+16.90	LT.	55.3	300.0		300.0	300.0	WHITE
US 45 AT KIRBY / N. SIDE	CROSSWALK	26+08.70	LT.	49.8		25+98.00	RT.	47.9	262.0		262.0	262.0	WHITE
US 45 AT HESSEL / S. SIDE	CROSSWALK	2+67.60	LT.	28.1		3+12.90	RT.	32.7	195.0		195.0	195.0	WHITE
HESSEL BLVD	CROSSWALK	2+35.50	LT.	45.5		2+51.10	LT.	41.1	36.0		36.0	36.0	WHITE
HESSEL BLVD	CROSSWALK	2+80.00	LT.	38.2		3+40.30	LT.	39.2	128.0		128.0	128.0	WHITE
STADIUM DR.	CROSSWALK	3+16.80	RT.	35.1		4+12.20	RT.	37.9	253.0		253.0	253.0	WHITE
US 45 AT HESSEL / N. SIDE	CROSSWALK	3+84.40	LT.	25.7		4+17.80	RT.	34.3	193.0		193.0	193.0	WHITE
US 45	MEDIAN	6+61.00	C.L.	0.0		7+56.00	C.L.	0.0	43.0		43.0	43.0	YELLOW
US 45	MEDIAN	9+25.00	C.L.	0.0		10+51.00	C.L.	0.0	46.0		46.0	46.0	YELLOW
US 45	MEDIAN	12+21.00	C.L.	0.0		13+76.00	C.L.	0.0	64.0		64.0	64.0	YELLOW
US 45 AT GREEN / S. SIDE	CROSSWALK	40+79.20	LT.	38.8		40+78.00	RT.	37.1	163.0	39.0	202.0	202.0	WHITE
GREEN ST. / WEST SIDE	CROSSWALK	40+80.00	LT.	39.6		41+56.00	LT.	40.0	198.0		198.0	198.0	WHITE
GREEN ST. / EAST SIDE	CROSSWALK	40+83.00	RT.	41.8		41+47.00	RT.	40.9		213.0	213.0	213.0	WHITE
US 45 AT GREEN / N. SIDE	CROSSWALK	41+56.80	LT.	39.2		41+54.70	RT.	33.8	163.0	27.0	190.0	190.0	WHITE
							TOTAL =		3165.0	279.0	3444.0	3444.0	
									FT	FT	FT	FT	

NOTES:

STATIONS AND OFFSETS SHOWN IN THE SCHEDULE ARE FOR REFERENCE ONLY.

SEE PAVEMENT MARKING PLAN SHEETS AND DISTRICT 5 DETAIL 7800AAAA FOR CONSTRUCTION LAYOUT.

78000650 THERMOPLASTIC PAVEMENT MARKING - LINE 24"

78008370 POLYUREA PAVEMENT MARKING TYPE II - LINE 24"

70300281 TEMPORARY PAVEMENT MARKING - LINE 24" - PAINT

78011125 GROOVING FOR RECESSED PAVEMENT MARKING 25"

LOCATION		STATION	78000650 QUANTITY (FT)	78008370 QUANTITY (FT)	70300281 QUANTITY (FT)	78011125 QUANTITY (FT)
US 45	RT.	133+84.00	58.0		58.0	58.0
US 45	LT.	132+76.00	55.0		55.0	55.0
US 45	RT.	123+91.00	38.0		38.0	38.0
US 45	LT.	122+85.00	50.0		50.0	50.0
US 45	RT.	115+09.00	38.0		38.0	38.0
US 45	LT.	113+96.00	51.0		51.0	51.0
US 45	RT.	80+76.00	53.0		53.0	53.0
US 45	LT.	79+33.00	62.0		62.0	62.0
US 45	RT.	70+70.00	38.0		38.0	38.0
US 45	LT.	69+62.00	42.0		42.0	42.0
US 45	RT.	58+14.00	38.0		38.0	38.0
US 45	LT.	56+78.00	54.0		54.0	54.0
US 45	RT.	40+59.00	50.0		50.0	50.0
US 45	LT.	39+37.00	34.0		34.0	34.0
US 45	RT.	27+30.00	54.0		54.0	54.0
US 45	LT.	25+97.00	57.0		57.0	57.0
US 45	RT.	2+80.50	41.0		41.0	41.0
US 45	LT.	4+04.00	39.0		39.0	39.0
US 45	RT.	40+71.00	38.0		38.0	38.0
US 45	LT.	41+65.00	39.0		39.0	39.0
US 45	RT.	49+42.00	37.0		37.0	37.0
CURTIS RD.	LT.	14+35.00	38.0		38.0	38.0
CURTIS RD.	RT.	15+63.00	33.0		33.0	33.0
ARBOUR TOWNE PL.	LT.	0+60.00	12.0		12.0	12.0
ARBOUR TOWNE PL.	LT.	0+60.00	16.0		16.0	16.0
BURWASH AVE.	LT.	0+57.00	20.0		20.0	20.0
ARBOURS DR.	LT.	0+56.00	15.0		15.0	15.0
DUNLAP CT.	LT.	0+56.00	12.0		12.0	12.0
COLLEGE PARK CT.	LT.	0+52.00	13.0		13.0	13.0
WINDSOR RD.	LT.	0+67.00	65.0		65.0	65.0
WINDSOR RD.	RT.	0+55.00	67.0		67.0	67.0
KNOLLWOOD DR.	LT.	0+59.00	37.0		37.0	37.0
KNOLLWOOD DR.	RT.	0+47.50		16.0	16.0	
DEVONSHIRE DR.	LT.	0+62.00	34.0		34.0	34.0
CARRIAGE CENTER CT.	LT.	0+44.00		26.0	26.0	26.0
FOX DR.	LT.	0+57.50	38.0		38.0	38.0
KIRBY AVE.	RT.	9+48.00	53.0		53.0	53.0
KIRBY AVE.	LT.	10+60.00	52.0		52.0	52.0
BIRCH ST.	LT.	0+44.00	19.0		19.0	19.0
BUENA VISTA DR.	LT.	0+45.50	18.0		18.0	18.0
HESSEL BLVD	LT.	0+70.50	32.0		32.0	32.0
HESSEL BLVD	LT.	0+70.50	18.0		18.0	18.0
STADIUM DR.	RT.	0+46.00	48.0		48.0	48.0
AVONDALE AVE.	LT.	0+54.00	15.0		15.0	15.0
ELLS AVE.	LT.	0+59.00	12.0		12.0	12.0
STANAGE AVE.	LT.	0+50.00	15.0		15.0	15.0
CHARLES ST.	LT.	0+44.00	16.0		16.0	16.0
WILLIAMS ST.	LT.	0+40.00	16.0		16.0	16.0
JOHN ST.	LT.	0+56.00		16.0	16.0	16.0
JOHN ST.	RT.	0+38.00	15.0		15.0	15.0
GREEN ST.	LT.	0+48.00	38.0		38.0	38.0
GREEN ST.	RT.	0+52.00		18.0	18.0	18.0
GREEN ST.	RT.	0+58.00		12.0	12.0	12.0
HEALEY ST.	LT.	0+42.00	15.0		15.0	15.0
		TOTAL =	1748.0	88.0	1836.0	1820.0
			FT	FT	FT	FT

NOTES:

POLYUREA PAVEMENT MARKINGS TYPE II SHALL BE USED ON PCC PAVEMENT.

SEE PAVEMENT MARKING PLAN SHEETS AND DISTRICT 5 DETAIL 7800AAAA FOR CONSTRUCTION LAYOUT.

STOP BARS LOCATED AT SIDE STREETS SHALL BE PLACED 4 FT. BEHIND THE CROSSWALK PAVEMENT MARKINGS PER DISTRICT 5 DETAIL NO. 7800AAAA.

DO NOT GROOVE STOP BAR ON KNOLLWOOD DR. / EAST SIDE.

SCHEDULE OF QUANTITIES

78000100 THERMOPLASTIC PAVEMENT MARKING, LETTERS AND SYMBOLS

70300211 TEMPORARY PAVEMENT MARKING LETTERS AND SYMBOLS - PAINT

78011000 GROOVING FOR RECESSED PAVEMENT MARKING, LETTERS AND SYMBOLS

LOCATION		STATION	SYMBOL	78000100 QUANTITY (SQ FT)	70300211 QUANTITY (SQ FT)	78011000 QUANTITY (SQ FT)
US 45	C.L.	134+98.00	LT. TURN	15.60	15.60	15.60
US 45	RT.	134+98.00	RT. TURN	15.60	15.60	15.60
US 45	C.L.	134+51.00	LT. TURN	15.60	15.60	15.60
US 45	RT.	134+51.00	RT. TURN	15.60	15.60	15.60
US 45	C.L.	134+04.00	LT. TURN	15.60	15.60	15.60
US 45	RT.	134+04.00	RT. TURN	15.60	15.60	15.60
US 45	C.L.	132+56.00	LT. TURN	15.60	15.60	15.60
US 45	LT.	132+56.00	RT. TURN	15.60	15.60	15.60
US 45	LT.	132+01.00	RT. TURN	15.60	15.60	15.60
US 45	C.L.	131+76.00	LT. TURN	15.60	15.60	15.60
US 45	LT.	131+46.00	RT. TURN	15.60	15.60	15.60
US 45	C.L.	130+54.00	DUAL LT.	31.20	31.20	31.20
US 45	C.L.	128+38.00	DUAL LT.	31.20	31.20	31.20
US 45	C.L.	126+23.00	DUAL LT.	31.20	31.20	31.20
US 45	C.L.	125+21.00	LT. TURN	15.60	15.60	15.60
US 45	C.L.	124+66.00	LT. TURN	15.60	15.60	15.60
US 45	C.L.	124+11.00	LT. TURN	15.60	15.60	15.60
US 45	LT.	122+65.00	RT. TURN	15.60	15.60	15.60
US 45	C.L.	122+43.00	DUAL LT.	31.20	31.20	31.20
US 45	LT.	121+96.00	RT. TURN	15.60	15.60	15.60
US 45	LT.	121+27.00	RT. TURN	15.60	15.60	15.60
US 45	C.L.	120+66.00	DUAL LT.	31.20	31.20	31.20
US 45	LT.	120+58.00	RT. TURN	15.60	15.60	15.60
US 45	LT.	119+89.00	RT. TURN	15.60	15.60	15.60
US 45	LT.	119+20.00	RT. TURN	15.60	15.60	15.60
US 45	C.L.	118+88.00	DUAL LT.	31.20	31.20	31.20
US 45	C.L.	117+11.00	DUAL LT.	31.20	31.20	31.20
US 45	C.L.	116+09.00	LT. TURN	15.60	15.60	15.60
US 45	C.L.	115+29.00	LT. TURN	15.60	15.60	15.60
US 45	LT.	113+76.00	RT. TURN	15.60	15.60	15.60
US 45	C.L.	113+54.00	DUAL LT.	31.20	31.20	31.20
US 45	LT.	113+32.00	RT. TURN	15.60	15.60	15.60
US 45	LT.	112+88.00	RT. TURN	15.60	15.60	15.60
US 45	C.L.	111+80.00	DUAL LT.	31.20	31.20	31.20
US 45	C.L.	110+06.00	DUAL LT.	31.20	31.20	31.20
US 45	C.L.	108+34.00	DUAL LT.	31.20	31.20	31.20
US 45	C.L.	106+58.00	DUAL LT.	31.20	31.20	31.20
US 45	C.L.	104+53.00	DUAL LT.	31.20	31.20	31.20
US 45	C.L.	102+48.00	DUAL LT.	31.20	31.20	31.20
US 45	C.L.	100+43.00	DUAL LT.	31.20	31.20	31.20
US 45	C.L.	98+38.00	DUAL LT.	31.20	31.20	31.20
US 45	C.L.	96+35.00	DUAL LT.	31.20	31.20	31.20
US 45	C.L.	94+79.00	DUAL LT.	31.20	31.20	31.20
US 45	C.L.	92+97.00	DUAL LT.	31.20	31.20	31.20
US 45	C.L.	91+15.00	DUAL LT.	31.20	31.20	31.20
US 45	C.L.	89+32.00	DUAL LT.	31.20	31.20	31.20
US 45	C.L.	87+76.00	DUAL LT.	31.20	31.20	31.20
US 45	C.L.	86+12.00	DUAL LT.	31.20	31.20	31.20
			SUB-TOTAL 1 =	1107.60	1107.60	1107.60
				SQ FT	SQ FT	SQ FT

78000100 THERMOPLASTIC PAVEMENT MARKING, LETTERS AND SYMBOLS (CONTINUED)

70300211 TEMPORARY PAVEMENT MARKING LETTERS AND SYMBOLS - PAINT (CONTINUED)

78011000 GROOVING FOR RECESSED PAVEMENT MARKING, LETTERS AND SYMBOLS (CONTINUED)

LOCATION		STATION	SYMBOL	78000100 QUANTITY (SQ FT)	70300211 QUANTITY (SQ FT)	78011000 QUANTITY (SQ FT)
US 45	C.L.	84+48.00	DUAL LT.	31.20	31.20	31.20
US 45	C.L.	82+66.00	LT. TURN	15.60	15.60	15.60
US 45	C.L.	82+09.00	LT. TURN	15.60	15.60	15.60
US 45	RT.	81+94.00	RT. TURN	15.60	15.60	15.60
US 45	C.L.	81+52.00	LT. TURN	15.60	15.60	15.60
US 45	RT.	81+45.00	RT. TURN	15.60	15.60	15.60
US 45	C.L.	80+96.00	LT. TURN	15.60	15.60	15.60
US 45	RT.	80+96.00	RT. TURN	15.60	15.60	15.60
US 45	C.L.	79+13.00	LT. TURN	15.60	15.60	15.60
US 45	LT.	79+13.00	RT. TURN	15.60	15.60	15.60
US 45	C.L.	78+47.00	LT. TURN	15.60	15.60	15.60
US 45	LT.	78+29.00	RT. TURN	15.60	15.60	15.60
US 45	C.L.	77+81.00	LT. TURN	15.60	15.60	15.60
US 45	LT.	77+45.00	RT. TURN	15.60	15.60	15.60
US 45	C.L.	77+14.00	LT. TURN	15.60	15.60	15.60
US 45	LT.	76+61.00	RT. TURN	15.60	15.60	15.60
US 45	LT.	75+78.00	RT. TURN	15.60	15.60	15.60
US 45	C.L.	75+22.00	DUAL LT.	31.20	31.20	31.20
US 45	C.L.	73+97.00	DUAL LT.	31.20	31.20	31.20
US 45	C.L.	72+72.00	DUAL LT.	31.20	31.20	31.20
US 45	C.L.	71+70.00	LT. TURN	15.60	15.60	15.60
US 45	C.L.	70+90.00	LT. TURN	15.60	15.60	15.60
US 45	C.L.	69+42.00	LT. TURN	15.60	15.60	15.60
US 45	C.L.	68+62.00	LT. TURN	15.60	15.60	15.60
US 45	C.L.	67+60.00	DUAL LT.	31.20	31.20	31.20
US 45	C.L.	65+74.00	DUAL LT.	31.20	31.20	31.20
US 45	C.L.	63+88.00	DUAL LT.	31.20	31.20	31.20
US 45	C.L.	62+02.00	DUAL LT.	31.20	31.20	31.20
US 45	C.L.	60+16.00	DUAL LT.	31.20	31.20	31.20
US 45	C.L.	59+14.00	LT. TURN	15.60	15.60	15.60
US 45	C.L.	58+34.00	LT. TURN	15.60	15.60	15.60
US 45	C.L.	56+58.00	LT. TURN	15.60	15.60	15.60
US 45	LT.	56+58.00	RT. TURN	15.60	15.60	15.60
US 45	C.L.	55+78.00	LT. TURN	15.60	15.60	15.60
US 45	LT.	55+75.00	RT. TURN	15.60	15.60	15.60
US 45	LT.	54+92.00	RT. TURN	15.60	15.60	15.60
US 45	C.L.	54+76.00	DUAL LT.	31.20	31.20	31.20
US 45	C.L.	52+56.00	DUAL LT.	31.20	31.20	31.20
US 45	C.L.	50+76.00	DUAL LT.	31.20	31.20	31.20
US 45	C.L.	48+80.00	DUAL LT.	31.20	31.20	31.20
US 45	C.L.	46+84.00	DUAL LT.	31.20	31.20	31.20
US 45	C.L.	45+30.00	DUAL LT.	31.20	31.20	31.20
US 45	C.L.	43+31.00	DUAL LT.	31.20	31.20	31.20
US 45	C.L.	41+89.00	LT. TURN	15.60	15.60	15.60
US 45	RT.	41+56.00	RT. TURN	15.60	15.60	15.60
US 45	C.L.	41+34.00	LT. TURN	15.60	15.60	15.60
US 45	C.L.	40+79.00	LT. TURN	15.60	15.60	15.60
US 45	RT.	40+79.00	RT. TURN	15.60	15.60	15.60
			SUB-TOTAL 2 =	998.40	998.40	998.40
				SQ FT	SQ FT	SQ FT

SCHEDULE OF QUANTITIES

78000100 THERMOPLASTIC PAVEMENT MARKING, LETTERS AND SYMBOLS (CONTINUED)

70300211 TEMPORARY PAVEMENT MARKING LETTERS AND SYMBOLS - PAINT (CONTINUED)

78011000 GROOVING FOR RECESSED PAVEMENT MARKING, LETTERS AND SYMBOLS (CONTINUED)

LOCATION		STATION	SYMBOL	78000100 QUANTITY (SQ FT)	70300211 QUANTITY (SQ FT)	78011000 QUANTITY (SQ FT)
US 45	C.L.	39+17.00	LT. TURN	15.60	15.60	15.60
US 45	C.L.	38+37.00	LT. TURN	15.60	15.60	15.60
US 45	C.L.	37+35.00	DUAL LT.	31.20	31.20	31.20
US 45	C.L.	35+01.00	DUAL LT.	31.20	31.20	31.20
US 45	C.L.	32+67.00	DUAL LT.	31.20	31.20	31.20
US 45	C.L.	30+32.00	DUAL LT.	31.20	31.20	31.20
US 45	C.L.	29+30.00	LT. TURN	15.60	15.60	15.60
US 45	C.L.	28+70.00	LT. TURN	15.60	15.60	15.60
US 45	C.L.	28+10.00	LT. TURN	15.60	15.60	15.60
US 45	C.L.	27+50.00	LT. TURN	15.60	15.60	15.60
US 45	C.L.	25+77.00	LT. TURN	15.60	15.60	15.60
US 45	LT.	25+77.00	RT. TURN	15.60	15.60	15.60
US 45	C.L.	25+17.00	LT. TURN	15.60	15.60	15.60
US 45	LT.	24+93.00	RT. TURN	15.60	15.60	15.60
US 45	C.L.	24+57.00	LT. TURN	15.60	15.60	15.60
US 45	C.L.	23+08.00	DUAL LT.	31.20	31.20	31.20
US 45	C.L.	21+97.00	DUAL LT.	31.20	31.20	31.20
US 45	C.L.	20+86.00	DUAL LT.	31.20	31.20	31.20
US 45	C.L.	19+29.00	DUAL LT.	31.20	31.20	31.20
US 45	C.L.	17+56.00	DUAL LT.	31.20	31.20	31.20
US 45	C.L.	16+54.00	LT. TURN	15.60	15.60	15.60
US 45	C.L.	15+74.00	LT. TURN	15.60	15.60	15.60
US 45	C.L.	14+34.00	DUAL LT.	31.20	31.20	31.20
US 45	C.L.	0+40.00	DUAL LT.	31.20	31.20	31.20
US 45	C.L.	1+50.50	LT. TURN	15.60	15.60	15.60
US 45	C.L.	2+05.50	LT. TURN	15.60	15.60	15.60
US 45	C.L.	2+60.50	LT. TURN	15.60	15.60	15.60
US 45	C.L.	4+24.00	LT. TURN	15.60	15.60	15.60
US 45	C.L.	4+88.00	LT. TURN	15.60	15.60	15.60
US 45	C.L.	5+38.00	LT. TURN	31.20	31.20	31.20
US 45	C.L.	5+66.00	LT. TURN	15.60	15.60	15.60
US 45	C.L.	7+56.00	LT. TURN	15.60	15.60	15.60
US 45	C.L.	8+36.00	LT. TURN	15.60	15.60	15.60
US 45	C.L.	10+51.00	LT. TURN	15.60	15.60	15.60
US 45	C.L.	11+31.00	LT. TURN	15.60	15.60	15.60
US 45	C.L.	13+76.00	LT. TURN	15.60	15.60	15.60
US 45	C.L.	14+56.00	LT. TURN	15.60	15.60	15.60
US 45	C.L.	15+90.00	DUAL LT.	31.20	31.20	31.20
US 45	C.L.	17+26.00	LT. TURN	15.60	15.60	15.60
US 45	C.L.	18+06.00	LT. TURN	15.60	15.60	15.60
US 45	C.L.	19+40.00	DUAL LT.	31.20	31.20	31.20
US 45	C.L.	20+98.00	DUAL LT.	31.20	31.20	31.20
US 45	C.L.	22+56.00	DUAL LT.	31.20	31.20	31.20
US 45	C.L.	24+13.00	DUAL LT.	31.20	31.20	31.20
US 45	C.L.	25+15.00	LT. TURN	15.60	15.60	15.60
US 45	C.L.	25+95.00	LT. TURN	15.60	15.60	15.60
US 45	C.L.	37+54.00	DUAL LT.	31.20	31.20	31.20
US 45	C.L.	38+69.00	DUAL LT.	31.20	31.20	31.20
			SUB-TOTAL 3 =	1045.20	1045.20	1045.20
				SQ FT	SQ FT	SQ FT

78000100 THERMOPLASTIC PAVEMENT MARKING, LETTERS AND SYMBOLS (CONTINUED)

70300211 TEMPORARY PAVEMENT MARKING LETTERS AND SYMBOLS - PAINT (CONTINUED)

78011000 GROOVING FOR RECESSED PAVEMENT MARKING, LETTERS AND SYMBOLS (CONTINUED)

LOCATION		STATION	SYMBOL	78000100 QUANTITY (SQ FT)	70300211 QUANTITY (SQ FT)	78011000 QUANTITY (SQ FT)
US 45	C.L.	39+71.00	LT. TURN	15.60	15.60	15.60
US 45	C.L.	40+51.00	LT. TURN	15.60	15.60	15.60
US 45	C.L.	41+85.00	LT. TURN	15.60	15.60	15.60
US 45	C.L.	42+65.00	LT. TURN	15.60	15.60	15.60
US 45	C.L.	43+67.00	DUAL LT.	31.20	31.20	31.20
US 45	C.L.	44+24.00	DUAL LT.	31.20	31.20	31.20
US 45	C.L.	45+26.00	LT. TURN	15.60	15.60	15.60
US 45	C.L.	46+00.00	LT. TURN	15.60	15.60	15.60
US 45	C.L.	47+30.00	DUAL LT.	31.20	31.20	31.20
US 45	C.L.	48+32.00	LT. TURN	15.60	15.60	15.60
US 45	C.L.	48+77.00	LT. TURN	15.60	15.60	15.60
US 45	C.L.	49+22.00	LT. TURN	15.60	15.60	15.60
CURTIS RD.	LT.	14+15.00	LT. TURN	15.60	15.60	15.60
CURTIS RD.	RT.	15+92.00	RAILROAD	61.20	61.20	61.20
CURTIS RD.	RT.	15+83.00	LT. TURN	15.60	15.60	15.60
ARBOUR TOWNE PL.	LT.	0+78.00	RT. TURN	15.60	15.60	15.60
ARBOUR TOWNE PL.	LT.	0+80.00	LT. TURN	15.60	15.60	15.60
WINDSOR RD.	LT.	0+87.00	RT. TURN	15.60	15.60	15.60
WINDSOR RD.	LT.	0+87.00	LT. TURN	15.60	15.60	15.60
WINDSOR RD.	RT.	0+77.00	LT. TURN	15.60	15.60	15.60
WINDSOR RD.	RT.	0+78.00	RT. TURN	15.60	15.60	15.60
KNOLLWOOD DR.	LT.	0+79.00	RT. TURN	15.60	15.60	15.60
KNOLLWOOD DR.	LT.	0+79.00	LT. TURN	15.60	15.60	15.60
DEVONSHIRE DR.	LT.	0+82.00	RT. TURN	15.60	15.60	15.60
DEVONSHIRE DR.	LT.	0+82.00	LT. TURN	15.60	15.60	15.60
FOX DR.	LT.	0+77.50	LT. TURN	15.60	15.60	15.60
KIRBY AVE	LT.	10+86.00	COMBO RT. / THRU	26.00	26.00	26.00
KIRBY AVE	LT.	10+86.00	LT. TURN	15.60	15.60	15.60
KIRBY AVE	RT.	9+20.00	LT. TURN	15.60	15.60	15.60
KIRBY AVE	RT.	9+20.00	COMBO RT. / THRU	26.00	26.00	26.00
HESSEL BLVD.	LT.	0+91.00	LT. TURN	15.60	15.60	15.60
HESSEL BLVD.	LT.	1+50.30	LT. TURN	15.60	15.60	15.60
HESSEL BLVD.	RT.	0+59.00	LT. TURN	15.60	15.60	15.60
HESSEL BLVD.	RT.	0+90.00	LT. TURN	15.60	15.60	15.60
GREEN ST.	LT.	0+68.00	LT. TURN	15.60	15.60	15.60
GREEN ST.	LT.	0+68.00	RT. TURN	15.60	15.60	15.60
			SUB-TOTAL 4 =	674.80	674.80	674.80
				SQ FT	SQ FT	SQ FT

	78000100 QUANTITY (SQ FT)	70300211 QUANTITY (SQ FT)	78011000 QUANTITY (SQ FT)
SUB-TOTAL 1 =	1107.60	1107.60	1107.60
SUB-TOTAL 2 =	998.40	998.40	998.40
SUB-TOTAL 3 =	1045.20	1045.20	1045.20
SUB-TOTAL 4 =	674.80	674.80	674.80
TOTAL =	3826.00	3826.00	3826.00
	SQ FT	SQ FT	SQ FT

NOTES:

STATIONS SHOWN ON SIDEROADS WITHOUT CENTERLINE CONTROL ARE FOR REFERENCE ONLY.

SEE PAVEMENT MARKING PLAN SHEETS AND DISTRICT 5 DETAIL 7800AAAA FOR CONSTRUCTION LAYOUT.

SCHEDULE OF QUANTITIES

78100100 RAISED REFLECTIVE PAVEMENT MARKER

78300200 RAISED REFLECTIVE PAVEMENT MARKER REMOVAL

LOCATION			STATION	TO	STATION	LENGTH (FT)	78100100 TWO-WAY AMBER QUANTITY (EACH	78100100 ONE-WAY CRYSTAL QUANTITY (EACH	78300200 RRPM REMOVAL QUANTITY (EACH
US 45	RT.	SKIP DASH	134+98.00		133+86.00	112.0		2.0	2.0
US 45	RT.	RT. TURN LANE	134+98.00		133+86.00	112.0		4.0	4.0
US 45	RT.	LT. TURN LANE	134+98.00		133+86.00	112.0		4.0	4.0
US 45	LT.	MEDIAN	134+98.00		133+86.00	112.0	8.0		8.0
US 45	LT.	SKIP DASH	134+98.00		133+86.00	112.0		2.0	2.0
US 45	RT.	SKIP DASH	132+76.00		123+93.00	883.0		13.0	13.0
US 45	LT.	SKIP DASH	132+74.00		123+91.00	883.0		13.0	13.0
US 45	RT.	MEDIAN	132+74.00		130+96.00	178.0	12.0		12.0
US 45	RT.	TWLTL - SOLID	130+96.00		125+81.00	515.0	13.0		13.0
US 45	LT.	TWLTL - SOLID	130+96.00		125+81.00	515.0	13.0		13.0
US 45	LT.	MEDIAN	125+81.00		123+93.00	188.0	12.0		12.0
US 45	RT.	LT. TURN LANE	125+21.00		123+93.00	128.0		5.0	5.0
US 45	LT.	RT. TURN LANE	132+74.00		131+46.00	128.0		5.0	5.0
US 45	RT.	SKIP DASH	122+85.00		115+11.00	774.0		11.0	11.0
US 45	LT.	SKIP DASH	122+83.00		115+09.00	774.0		11.0	11.0
US 45	LT.	RT. TURN LANE	122+83.00		119+20.00	363.0		11.0	11.0
US 45	RT.	TWLTL - SOLID	122+83.00		116+69.00	614.0	17.0		17.0
US 45	LT.	TWLTL - SOLID	122+83.00		116+69.00	614.0	16.0		16.0
US 45	LT.	MEDIAN	116+69.00		115+11.00	158.0	10.0		10.0
US 45	RT.	LT. TURN LANE	116+09.00		115+11.00	98.0		4.0	4.0
US 45	RT.	SKIP DASH	113+96.00		107+48.00	648.0		9.0	9.0
US 45	LT.	SKIP DASH	113+94.00		107+48.00	646.0		9.0	9.0
US 45	RT.	TWLTL - SOLID	113+94.00		107+92.00	602.0	17.0		17.0
US 45	LT.	TWLTL - SOLID	113+94.00		107+92.00	602.0	17.0		17.0
US 45	LT.	RT. TURN LANE	113+94.00		112+88.00	106.0		4.0	4.0
US 45	RT.	SKIP DASH	107+48.00		95+58.50	1189.5		15.0	15.0
US 45	LT.	SKIP DASH	107+48.00		95+58.50	1189.5		15.0	15.0
US 45	RT.	TWLTL - SOLID	107+00.00		95+93.00	1107.0	29.0		29.0
US 45	LT.	TWLTL - SOLID	107+00.00		95+93.00	1107.0	29.0		29.0
US 45	RT.	SKIP DASH	95+58.50		88+55.20	703.3		9.0	9.0
US 45	LT.	SKIP DASH	95+58.50		88+55.20	703.3		9.0	9.0
US 45	RT.	TWLTL - SOLID	95+21.00		88+90.00	631.0	17.0		17.0
US 45	LT.	TWLTL - SOLID	95+21.00		88+90.00	631.0	17.0		17.0
US 45	RT.	SKIP DASH	88+55.20		80+78.00	777.2		11.0	11.0
US 45	LT.	SKIP DASH	88+55.20		80+76.00	779.2		11.0	11.0
US 45	RT.	TWLTL - SOLID	88+18.00		84+06.00	412.0	12.0		12.0
US 45	LT.	TWLTL - SOLID	88+18.00		84+06.00	412.0	11.0		11.0
US 45	LT.	MEDIAN	84+06.00		80+78.00	328.0	20.0		20.0
US 45	RT.	LT. TURN LANE	82+66.00		80+78.00	188.0		6.0	6.0
US 45	RT.	RT. TURN LANE	81+94.00		80+78.00	116.0		4.0	4.0
US 45	RT.	SKIP DASH	79+33.00		70+72.00	861.0		12.0	12.0
US 45	LT.	SKIP DASH	79+31.00		70+70.00	861.0		12.0	12.0
US 45	RT.	MEDIAN	79+31.00		75+64.00	367.0	22.0		22.0
US 45	RT.	LT. TURN LANE	79+31.00		77+14.00	217.0		7.0	7.0
US 45	LT.	RT. TURN LANE	79+31.00		75+78.00	353.0		10.0	10.0
US 45	RT.	TWLTL SOLID	75+64.00		72+30.00	334.0	9.0		9.0
US 45	LT.	TWLTL - SOLID	75+64.00		72+30.00	334.0	9.0		9.0
US 45	LT.	MEDIAN	72+30.00		70+72.00	158.0	10.0		10.0
US 45	RT.	LT. TURN LANE	71+70.00		70+72.00	98.0		4.0	4.0
						SUB-TOTAL 1 =	320.0	232.0	552.0
							EACH	EACH	EACH

78100100 RAISED REFLECTIVE PAVEMENT MARKER (CONTINUED)

78300200 RAISED REFLECTIVE PAVEMENT MARKER REMOVAL (CONTINUED)

LOCATION			STATION	TO	STATION	LENGTH (FT)	78100100 TWO-WAY AMBER QUANTITY (EACH	78100100 ONE-WAY CRYSTAL QUANTITY (EACH	78300200 RRPM REMOVAL QUANTITY (EACH
US 45	RT.	SKIP DASH	69+62.00		58+16.00	1146.0		16.0	16.0
US 45	LT.	SKIP DASH	69+60.00		58+14.00	1146.0		16.0	16.0
US 45	RT.	MEDIAN	69+60.00		68+02.00	158.0	10.0		10.0
US 45	LT.	LT. TURN LANE	69+60.00		68+62.00	98.0		4.0	4.0
US 45	RT.	TWLTL - SOLID	68+02.00		59+74.00	828.0	21.0		21.0
US 45	LT.	TWLTL - SOLID	68+02.00		59+74.00	828.0	21.0		21.0
US 45	LT.	MEDIAN	59+74.00		58+16.00	158.0	10.0		10.0
US 45	RT.	LT. TURN LANE	59+14.00		58+16.00	98.0		4.0	4.0
US 45	RT.	SKIP DASH	56+78.00		51+72.20	505.8		7.0	7.0
US 45	LT.	SKIP DASH	56+76.00		51+72.20	503.8		7.0	7.0
US 45	RT.	MEDIAN	56+76.00		55+18.00	158.0	10.0		10.0
US 45	LT.	LT. TURN LANE	56+76.00		55+78.00	98.0		4.0	4.0
US 45	RT.	TWLTL - SOLID	55+18.00		52+14.00	304.0	8.0		8.0
US 45	LT.	TWLTL - SOLID	55+18.00		52+14.00	304.0	9.0		9.0
US 45	LT.	RT. TURN LANE	56+76.00		54+92.00	184.0		6.0	6.0
US 45	RT.	SKIP DASH	51+72.20		47+12.48 (AH)	459.7		6.0	6.0
US 45	RT.	SKIP DASH	47+11.85 (BK)		46+05.00	106.9		2.0	2.0
US 45	LT.	SKIP DASH	51+72.20		47+12.48 (AH)	459.7		6.0	6.0
US 45	LT.	SKIP DASH	47+11.85 (BK)		46+05.00	106.9		2.0	2.0
US 45	RT.	TWLTL - SOLID	51+18.00		47+12.48 (AH)	405.5	11.0		11.0
US 45	RT.	TWLTL - SOLID	47+11.85 (BK)		46+42.00	69.9	3.0		3.0
US 45	LT.	TWLTL - SOLID	51+18.00		47+12.48 (AH)	405.5	11.0		11.0
US 45	LT.	TWLTL - SOLID	47+11.85 (BK)		46+42.00	69.9	3.0		3.0
US 45	RT.	SKIP DASH	46+05.00		43+44.41 (AH)	260.6		4.0	4.0
US 45	RT.	SKIP DASH	43+44.72 (BK)		40+61.00	283.7		5.0	5.0
US 45	LT.	SKIP DASH	46+05.00		43+44.41 (AH)	260.6		4.0	4.0
US 45	LT.	SKIP DASH	43+44.72 (BK)		40+59.00	285.7		5.0	5.0
US 45	RT.	TWLTL - SOLID	45+72.00		43+44.41 (AH)	227.6	6.0		6.0
US 45	RT.	TWLTL - SOLID	43+44.72 (BK)		42+89.00	55.7	3.0		3.0
US 45	LT.	TWLTL - SOLID	45+72.00		43+44.41 (AH)	227.6	6.0		6.0
US 45	LT.	TWLTL - SOLID	43+44.72 (BK)		42+89.00	55.7	2.0		2.0
US 45	LT.	MEDIAN	42+89.00		40+61.00	228.0	14.0		14.0
US 45	RT.	LT. TURN LANE	41+89.00		40+61.00	128.0		5.0	5.0
US 45	RT.	RT. TURN LANE	41+56.00		40+61.00	95.0		4.0	4.0
US 45	RT.	SKIP DASH	39+37.00		27+32.00	1205.0		17.0	17.0
US 45	LT.	SKIP DASH	39+35.00		27+30.00	1205.0		17.0	17.0
US 45	RT.	MEDIAN	39+35.00		37+77.00	158.0	10.0		10.0
US 45	LT.	LT. TURN LANE	39+35.00		38+37.00	98.0		4.0	4.0
US 45	RT.	TWLTL - SOLID	37+77.00		29+90.00	787.0	20.0		20.0
US 45	LT.	TWLTL - SOLID	37+77.00		29+90.00	787.0	20.0		20.0
US 45	LT.	MEDIAN	29+90.00		27+30.00	260.0	16.0		16.0
US 45	RT.	LT. TURN LANE	29+30.00		27+32.00	198.0		6.0	6.0
US 45	RT.	SKIP DASH	25+97.00		20+02.50	594.5		8.0	8.0
US 45	LT.	SKIP DASH	25+95.00		20+02.50	592.5		8.0	8.0
US 45	RT.	MEDIAN	25+95.00		23+50.00	245.0	16.0		16.0
US 45	LT.	LT. TURN LANE	25+95.00		24+57.00	138.0		5.0	5.0
US 45	LT.	RT. TURN LANE	25+97.00		24+93.00	104.0		4.0	4.0
US 45	RT.	TWLTL - SOLID	23+50.00		20+44.00	306.0	8.0		8.0
US 45	LT.	TWLTL - SOLID	23+50.00		20+44.00	306.0	9.0		9.0
						SUB TOTAL 2 =	247.0	176.0	423.0
							EACH	EACH	EACH

SCHEDULE OF QUANTITIES

78100100 RAISED REFLECTIVE PAVEMENT MARKER (CONTINUED)

78300200 RAISED REFLECTIVE PAVEMENT MARKER REMOVAL (CONTINUED)

LOCATION			STATION	TO	STATION	LENGTH (FT)	78100100 TWO-WAY AMBER QUANTITY (EACH	78100100 ONE-WAY CRYSTAL QUANTITY (EACH	78300200 RRPM REMOVAL QUANTITY (EACH
US 45	RT.	SKIP DASH	20+02.50		15+12.80	489.7		7.0	7.0
US 45	LT.	SKIP DASH	20+02.50		15+12.80	489.7		7.0	7.0
US 45	RT.	TWLTL - SOLID	19+71.00		17+14.00	257.0	8.0		8.0
US 45	LT.	TWLTL - SOLID	19+71.00		17+14.00	257.0	7.0		7.0
US 45	LT.	MEDIAN	17+14.00		15+54.00	160.0	10.0		10.0
US 45	RT.	LT. TURN LANE	16+54.00		15+54.00	100.0		4.0	4.0
US 45	RT.	SKIP DASH	15+12.80		13+30.18 (BK)	182.6		3.0	3.0
US 45	LT.	SKIP DASH	15+12.80		13+30.18 (BK)	182.6		3.0	3.0
US 45	RT.	TWLTL - SOLID	14+76.00		13+30.18 (BK)	145.8	4.0		4.0
US 45	LT.	TWLTL - SOLID	14+76.00		13+30.18 (BK)	145.8	4.0		4.0
US 45	RT.	SKIP DASH	0+00.00 (AH)		2+89.00	289.0		5.0	5.0
US 45	LT.	SKIP DASH	0+00.00 (AH)		2+74.00	274.0		5.0	5.0
US 45	RT.	TWLTL - SOLID	0+00.00 (AH)		0+80.50	80.5	3.0		3.0
US 45	LT.	TWLTL - SOLID	0+00.00 (AH)		0+80.50	80.5	3.0		3.0
US 45	LT.	MEDIAN	0+80.50		2+74.00	193.5	12.0		12.0
US 45	RT.	LT. TURN LANE	1+50.50		2+82.00	131.5		5.0	5.0
US 45	RT.	SKIP DASH	4+09.00		6+34.30	225.3		3.0	3.0
US 45	LT.	SKIP DASH	3+96.00		6+34.30	238.3		3.0	3.0
US 45	RT.	MEDIAN	4+09.00		5+86.00	177.0	12.0		12.0
US 45	LT.	LT. TURN LANE	4+03.00		4+88.00	85.0		3.0	3.0
US 45	RT.	LT. TURN LANE	5+38.00		5+86.00	48.0		3.0	3.0
US 45	RT.	SKIP DASH	6+34.30		8+95.30	261.0		4.0	4.0
US 45	LT.	SKIP DASH	6+34.30		8+95.30	261.0		4.0	4.0
US 45	RT.	MEDIAN	6+61.00		7+56.00	95.0	6.0		6.0
US 45	LT.	MEDIAN	7+56.00		8+56.00	100.0	8.0		8.0
US 45	RT.	LT. TURN LANE	7+56.00		8+56.00	100.0		4.0	4.0
US 45	RT.	SKIP DASH	8+95.30		11+87.00	291.7		4.0	4.0
US 45	LT.	SKIP DASH	8+95.30		11+87.00	291.7		4.0	4.0
US 45	RT.	MEDIAN	9+25.00		10+51.00	126.0	8.0		8.0
US 45	LT.	MEDIAN	10+51.00		11+51.00	100.0	8.0		8.0
US 45	RT.	LT. TURN LANE	10+51.00		11+51.00	100.0		4.0	4.0
US 45	RT.	SKIP DASH	11+87.00		15+12.50	325.5		5.0	5.0
US 45	LT.	SKIP DASH	11+87.00		15+12.50	325.5		5.0	5.0
US 45	RT.	MEDIAN	12+21.00		13+76.00	155.0	10.0		10.0
US 45	LT.	MEDIAN	13+76.00		14+76.00	100.0	6.0		6.0
US 45	RT.	LT. TURN LANE	13+76.00		14+76.00	100.0		4.0	4.0
US 45	RT.	SKIP DASH	15+12.50		18+60.20	347.7		5.0	5.0
US 45	LT.	SKIP DASH	15+12.50		18+60.20	347.7		5.0	5.0
US 45	RT.	TWLTL - SOLID	15+48.00		16+66.00	118.0	4.0		4.0
US 45	LT.	TWLTL - SOLID	15+48.00		16+66.00	118.0	3.0		3.0
US 45	LT.	MEDIAN	16+66.00		18+26.00	160.0	10.0		10.0
US 45	RT.	LT. TURN LANE	17+26.00		18+26.00	100.0		4.0	4.0
US 45	RT.	SKIP DASH	18+60.20		20+33.42 (BK)	173.2		3.0	3.0
US 45	RT.	SKIP DASH	20+31.70 (AH)		26+81.14 (BK)	649.4		9.0	9.0
US 45	LT.	SKIP DASH	18+60.20		20+33.42 (BK)	173.2		3.0	3.0
US 45	LT.	SKIP DASH	20+31.70 (AH)		26+81.14 (BK)	649.4		9.0	9.0
US 45	RT.	TWLTL - SOLID	18+98.00		20+33.42 (BK)	135.4	4.0		4.0
US 45	LT.	TWLTL - SOLID	18+98.00		20+33.42 (BK)	135.4	4.0		4.0
US 45	RT.	TWLTL - SOLID	20+31.70 (AH)		24+55.00	423.3	12.0		12.0
						SUB-TOTAL 3 =	146.0	127.0	273.0
							EACH	EACH	EACH

78100100 RAISED REFLECTIVE PAVEMENT MARKER (CONTINUED)

78300200 RAISED REFLECTIVE PAVEMENT MARKER REMOVAL (CONTINUED)

LOCATION			STATION	TO	STATION	LENGTH (FT)	78100100 TWO-WAY AMBER QUANTITY (EACH	78100100 ONE-WAY CRYSTAL QUANTITY (EACH	78300200 RRPM REMOVAL QUANTITY (EACH
US 45	LT.	TWLTL - SOLID	20+31.70 (AH)		24+55.00	423.3	11.0		11.0
US 45	LT.	MEDIAN	24+55.00		26+15.00	160.0	10.0		10.0
US 45	RT.	LT. TURN LANE	25+15.00		26+15.00	100.0		4.0	4.0
US 45	RT.	SKIP DASH	37+10.00 (AH)		40+69.00	359.0		6.0	6.0
US 45	LT.	SKIP DASH	37+10.00 (AH)		40+71.00	361.0		6.0	6.0
US 45	RT.	TWLTL - SOLID	37+10.00 (AH)		39+11.00	201.0	7.0		7.0
US 45	LT.	TWLTL - SOLID	37+10.00 (AH)		39+11.00	201.0	6.0		6.0
US 45	LT.	MEDIAN	39+11.00		40+69.00	158.0	10.0		10.0
US 45	RT.	LT. TURN LANE	39+71.00		40+69.00	98.0		4.0	4.0
US 45	RT.	SKIP DASH	41+65.00		46+53.10	488.1		7.0	7.0
US 45	LT.	SKIP DASH	41+67.00		46+53.10	486.1		7.0	7.0
US 45	RT.	MEDIAN	41+67.00		43+25.00	158.0	10.0		10.0
US 45	LT.	LT. TURN LANE	41+67.00		42+65.00	98.0		4.0	4.0
US 45	RT.	TWLTL - SOLID	43+25.00		44+66.00	141.0	4.0		4.0
US 45	LT.	TWLTL - SOLID	43+25.00		44+66.00	141.0	4.0		4.0
US 45	LT.	MEDIAN	44+66.00		46+20.00	154.0	10.0		10.0
US 45	RT.	LT. TURN LANE	45+26.00		46+20.00	94.0		4.0	4.0
US 45	RT.	SKIP DASH	46+53.10		49+40.00	286.9		5.0	5.0
US 45	LT.	SKIP DASH	46+53.10		49+42.00	288.9		5.0	5.0
US 45	RT.	TWLTL - SOLID	46+88.00		47+62.00	74.0	3.0		3.0
US 45	LT.	TWLTL - SOLID	46+88.00		47+62.00	74.0	2.0		2.0
US 45	LT.	MEDIAN	47+62.00		49+40.00	178.0	12.0		12.0
US 45	RT.	LT. TURN LANE	48+32.00		49+40.00	108.0		4.0	4.0
						SUB-TOTAL 4 =	89.0	56.0	145.0
							EACH	EACH	EACH

	78100100 TWO-WAY AMBER QUANTITY (EACH	78100100 ONE-WAY CRYSTAL QUANTITY (EACH	78300200 RRPM REMOVAL QUANTITY (EACH
SUB-TOTAL 1 =	320.0	232.0	552.0
SUB-TOTAL 2 =	247.0	176.0	423.0
SUB-TOTAL 3 =	146.0	127.0	273.0
SUB-TOTAL 4 =	89.0	56.0	145.0
TOTAL =	802.0	591.0	1393.0
	EACH	EACH	EACH

MODEL: $MODELNAME$
FILE NAME: pw:\\ildot-pw.bentley.com:PWIDOT\Documents\IDOT Offices\District 5\Project\D57099\CADData\CADsheets\D57099-sht-Schedule.dgn

USER NAME = Greg.Eaglin	DESIGNED -	REVISED -	STATE OF ILLINOIS DEPARTMENT OF TRANSPORTATION
	DRAWN -	REVISED -	
PLOT SCALE = 40.0000 ' / in.	CHECKED -	REVISED -	
PLOT DATE = 6/26/2024	DATE -	REVISED -	

SCHEDULE OF QUANTITIES

SCALE: | SHEET 24 OF 24 SHEETS | STA. TO STA.

F.A.P. RTE.	SECTION	COUNTY	TOTAL SHEETS	SHEET NO.
804	25RS-6	CHAMPAIGN	306	55

CONTRACT NO. 70991

ILLINOIS | FED. AID PROJECT

NOTE:
PLAN SHEETS ARE SHOWN GOING FROM SOUTH TO NORTH.
THE WEST SIDE IS CALLED LEFT AND THE EAST SIDE CALLED RIGHT.
STATIONS DECREASE FROM SOUTH TO NORTH ON THIS PLAN SHEET.

NOTES:
1) SEE TRAFFIC SIGNAL PLAN SHEETS FOR SIGNAL MODERIZATION.
2) SEE ADA RAMP DETAILS FOR PROPOSED ADA SIDEWALK SLOPES.
3) SEE REMOVAL PLAN SHEETS FOR REMOVAL ITEMS.
4) SEE PAVEMENT MARKING PLAN SHEETS FOR PERMANENT STRIPING.
5) SEE SODDING AND EROSION PLAN SHEETS LANDSCAPING IMPROVEMENTS.

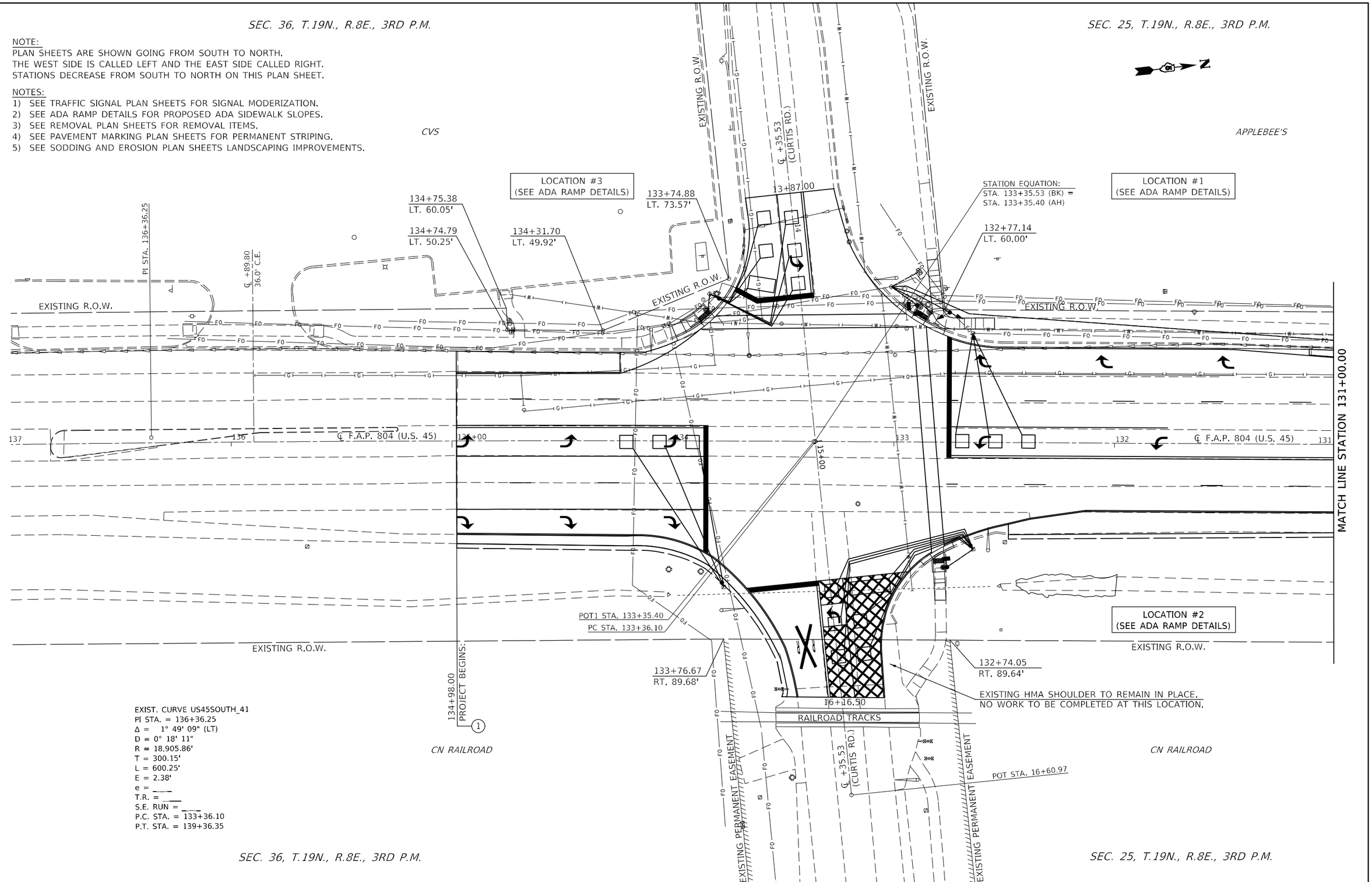

USER NAME = Greg.Eaglin	DESIGNED -	REVISED -	
	DRAWN -	REVISED -	
PLOT SCALE = 40.0000 ' / in.	CHECKED -	REVISED -	
PLOT DATE = 6/26/2024	DATE -	REVISED -	

STATE OF ILLINOIS
DEPARTMENT OF TRANSPORTATION

PLAN SHEETS

SCALE: 1" = 20' | SHEET 1 OF 28 SHEETS | STA. 137+00.00 TO STA. 131+00.00

F.A.P. RTE.	SECTION	COUNTY	TOTAL SHEETS	SHEET NO.
804	25RS-6	CHAMPAIGN	306	56
		CONTRACT NO. 70991		
		ILLINOIS FED. AID PROJECT		

MODEL: S_MODEL NAMES
FILE NAME: pw:\\ildot-pw.bentley.com:PWIDOT\Documents\IDOT Offices\District 5\Projects\D570991\CADData\CADsheets\D570991-sht-plan.dgn

SEC. 25, T.19N., R.8E., 3RD P.M.

NOTE:
PLAN SHEETS ARE SHOWN GOING FROM SOUTH TO NORTH.
THE WEST SIDE IS CALLED LEFT AND THE EAST SIDE CALLED RIGHT.
STATIONS DECREASE FROM SOUTH TO NORTH ON THIS PLAN SHEET.

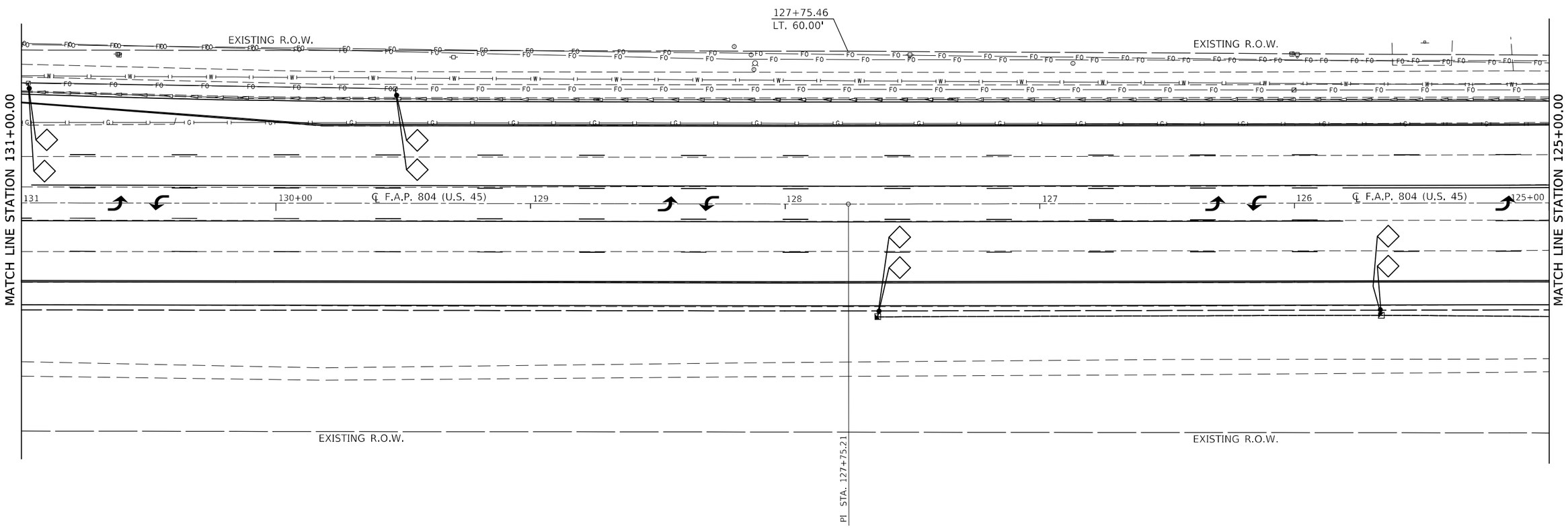

NOTES:
1) SEE TRAFFIC SIGNAL PLAN SHEETS FOR SIGNAL MODERIZATION.
2) SEE ADA RAMP DETAILS FOR PROPOSED ADA SIDEWALK SLOPES.
3) SEE REMOVAL PLAN SHEETS FOR REMOVAL ITEMS.
4) SEE PAVEMENT MARKING PLAN SHEETS FOR PERMANENT STRIPING.
5) SEE SODDING AND EROSION PLAN SHEETS LANDSCAPING IMPROVEMENTS.

SEC. 25, T.19N., R.8E., 3RD P.M.

MODEL: $MODELNAMES
FILE NAME: pw:\\ildot-pw.bentley.com:PWIDOT\Documents\IDOT Offices\District 5\Projects\D57099\CADData\CADsheets\D570991-sht-plan.dgn

USER NAME = Greg.Eaglin	DESIGNED -	REVISED -	
	DRAWN -	REVISED -	
PLOT SCALE = 40.0000 ' / in.	CHECKED -	REVISED -	
PLOT DATE = 6/26/2024	DATE -	REVISED -	

STATE OF ILLINOIS
DEPARTMENT OF TRANSPORTATION

PLAN SHEETS

SCALE: 1" = 20' | SHEET 2 OF 28 SHEETS | STA. 131+00.00 TO STA. 125+00.00

F.A.P. RTE.	SECTION	COUNTY	TOTAL SHEETS	SHEET NO.
804	25RS-6	CHAMPAIGN	306	57
		CONTRACT NO. 70991		
		ILLINOIS	FED. AID PROJECT	

SEC. 25, T.19N., R.8E., 3RD P.M.

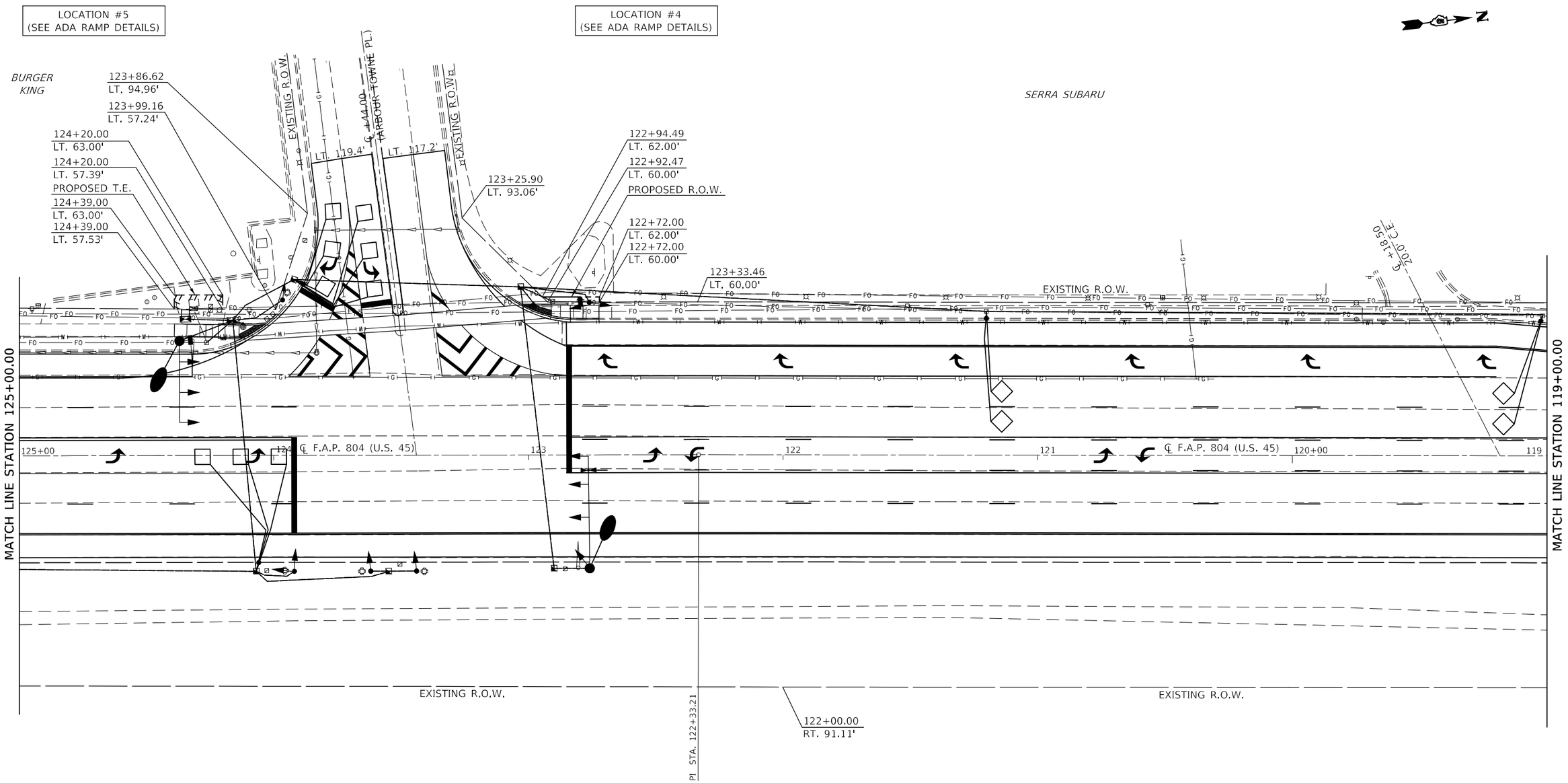

NOTE:
PLAN SHEETS ARE SHOWN GOING FROM SOUTH TO NORTH.
THE WEST SIDE IS CALLED LEFT AND THE EAST SIDE CALLED RIGHT.
STATIONS DECREASE FROM SOUTH TO NORTH ON THIS PLAN SHEET.

SEC. 25, T.19N., R.8E., 3RD P.M.

NOTES:
1) SEE TRAFFIC SIGNAL PLAN SHEETS FOR SIGNAL MODERIZATION.
2) SEE ADA RAMP DETAILS FOR PROPOSED ADA SIDEWALK SLOPES.
3) SEE REMOVAL PLAN SHEETS FOR REMOVAL ITEMS.
4) SEE PAVEMENT MARKING PLAN SHEETS FOR PERMANENT STRIPING.
5) SEE SODDING AND EROSION PLAN SHEETS LANDSCAPING IMPROVEMENTS.

MODEL: SMODELNAMES
FILE NAME: pw:\\ildot-pw.bentley.com:PWIDOT\Documents\IDOT Offices\District 5\Projects\D57099 \CADData\CADsheets\D57099-sht-plan.dgn

USER NAME = Greg.Eaglin	DESIGNED -	REVISED -	
	DRAWN -	REVISED -	
PLOT SCALE = 40.0000 ' / in.	CHECKED -	REVISED -	
PLOT DATE = 6/26/2024	DATE -	REVISED -	

STATE OF ILLINOIS
DEPARTMENT OF TRANSPORTATION

PLAN SHEETS

SCALE: 1" = 20' | SHEET 3 OF 28 SHEETS | STA. 125+00.00 TO STA. 119+00.00

F.A.P. RTE.	SECTION	COUNTY	TOTAL SHEETS	SHEET NO.
804	25RS-6	CHAMPAIGN	306	58
		CONTRACT NO. 70991		
		ILLINOIS	FED. AID PROJECT	

SEC. 25, T.19N., R.8E., 3RD P.M.

SEC. 25, T.19N., R.8E., 3RD P.M.

NOTE:
PLAN SHEETS ARE SHOWN GOING FROM SOUTH TO NORTH.
THE WEST SIDE IS CALLED LEFT AND THE EAST SIDE CALLED RIGHT.
STATIONS DECREASE FROM SOUTH TO NORTH ON THIS PLAN SHEET.

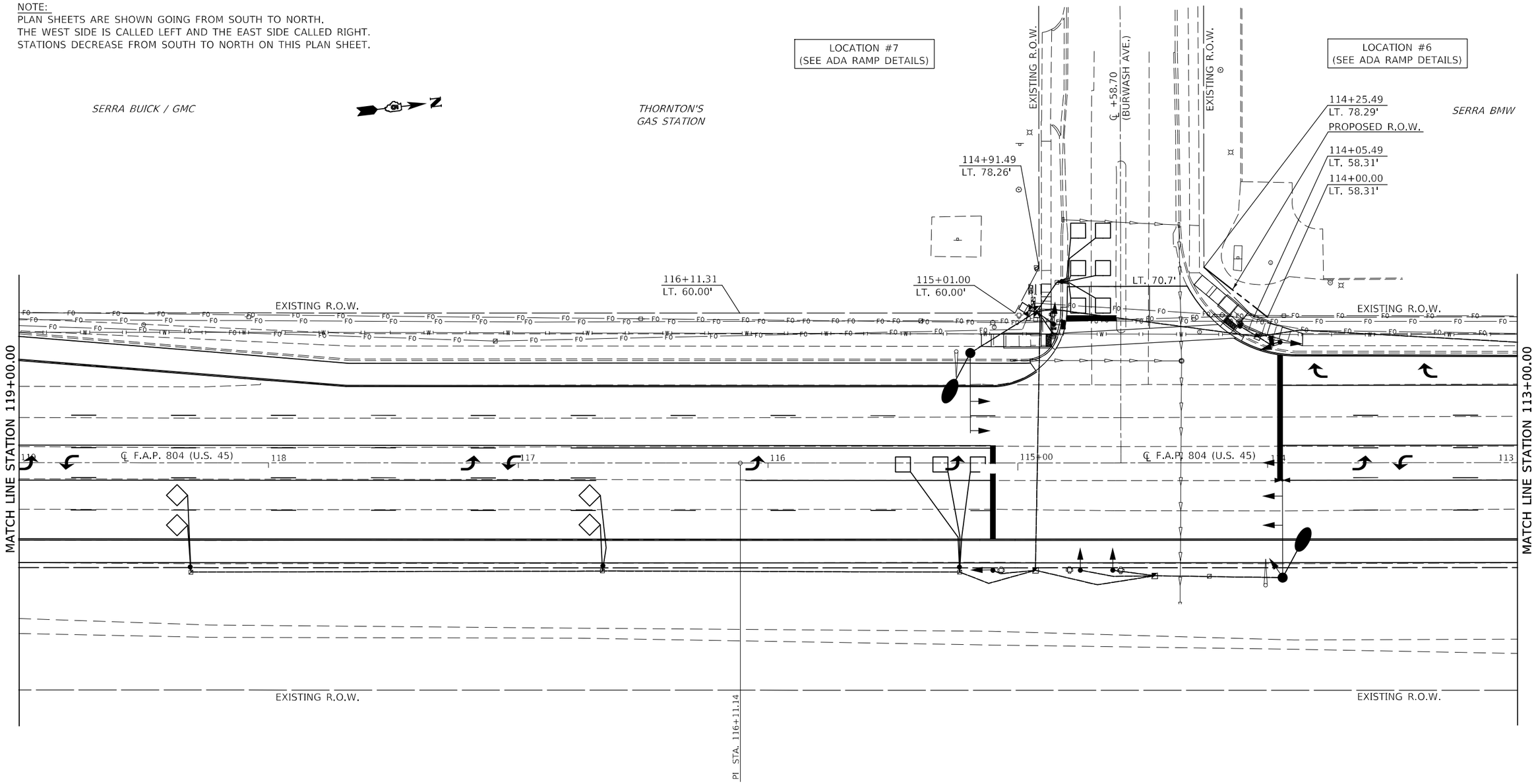

NOTES:
1) SEE TRAFFIC SIGNAL PLAN SHEETS FOR SIGNAL MODERIZATION.
2) SEE ADA RAMP DETAILS FOR PROPOSED ADA SIDEWALK SLOPES.
3) SEE REMOVAL PLAN SHEETS FOR REMOVAL ITEMS.
4) SEE PAVEMENT MARKING PLAN SHEETS FOR PERMANENT STRIPING.
5) SEE SODDING AND EROSION PLAN SHEETS LANDSCAPING IMPROVEMENTS.

SEC. 25, T.19N., R.8E., 3RD P.M.

SEC. 25, T.19N., R.8E., 3RD P.M.

NOTE:
PLAN SHEETS ARE SHOWN GOING FROM SOUTH TO NORTH.
THE WEST SIDE IS CALLED LEFT AND THE EAST SIDE CALLED RIGHT.
STATIONS DECREASE FROM SOUTH TO NORTH ON THIS PLAN SHEET.

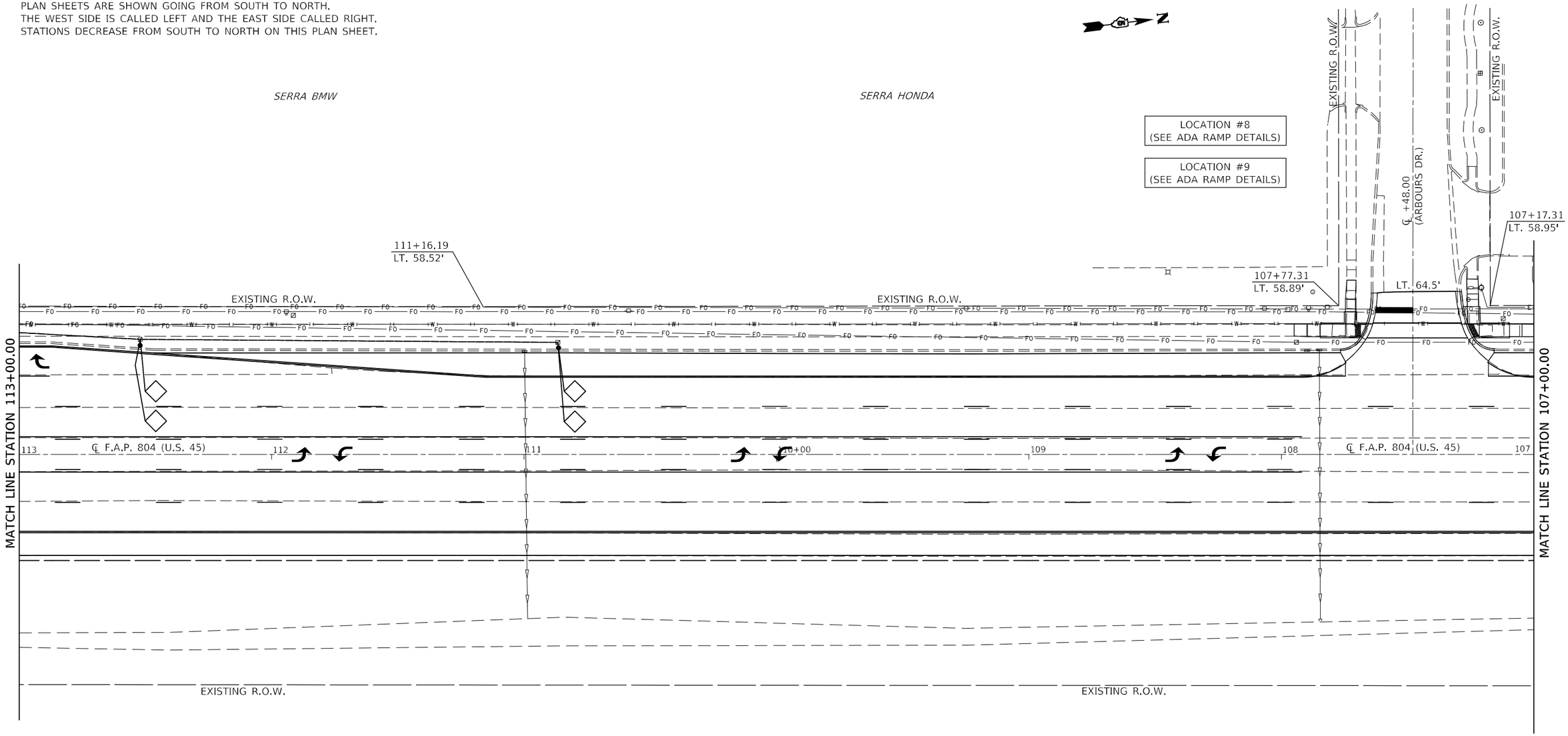

NOTES:
1) SEE TRAFFIC SIGNAL PLAN SHEETS FOR SIGNAL MODERIZATION.
2) SEE ADA RAMP DETAILS FOR PROPOSED ADA SIDEWALK SLOPES.
3) SEE REMOVAL PLAN SHEETS FOR REMOVAL ITEMS.
4) SEE PAVEMENT MARKING PLAN SHEETS FOR PERMANENT STRIPING.
5) SEE SODDING AND EROSION PLAN SHEETS LANDSCAPING IMPROVEMENTS.

SEC. 25, T.19N., R.8E., 3RD P.M.

MODEL: $MODEL NAMES
FILE NAME: pw:\\ildot-pw.bentley.com:PWIDOT\Documents\IDOT Offices\District 5\Projects\D570991\CADData\CADsheets\D570991-sht-plan.dgn

USER NAME = Greg.Eaglin	DESIGNED -	REVISED -	
	DRAWN -	REVISED -	
PLOT SCALE = 40.0000 ' / in.	CHECKED -	REVISED -	
PLOT DATE = 6/26/2024	DATE -	REVISED -	

STATE OF ILLINOIS
DEPARTMENT OF TRANSPORTATION

PLAN SHEETS

SCALE: 1" = 20' | SHEET 5 OF 28 SHEETS | STA. 113+00.00 TO STA. 107+00.00

F.A.P. RTE.	SECTION	COUNTY	TOTAL SHEETS	SHEET NO.
804	25RS-6	CHAMPAIGN	306	60
		CONTRACT NO. 70991		
		ILLINOIS FED. AID PROJECT		

SEC. 25, T.19N., R.8E., 3RD P.M.

NOTE:
PLAN SHEETS ARE SHOWN GOING FROM SOUTH TO NORTH.
THE WEST SIDE IS CALLED LEFT AND THE EAST SIDE CALLED RIGHT.
STATIONS DECREASE FROM SOUTH TO NORTH ON THIS PLAN SHEET.

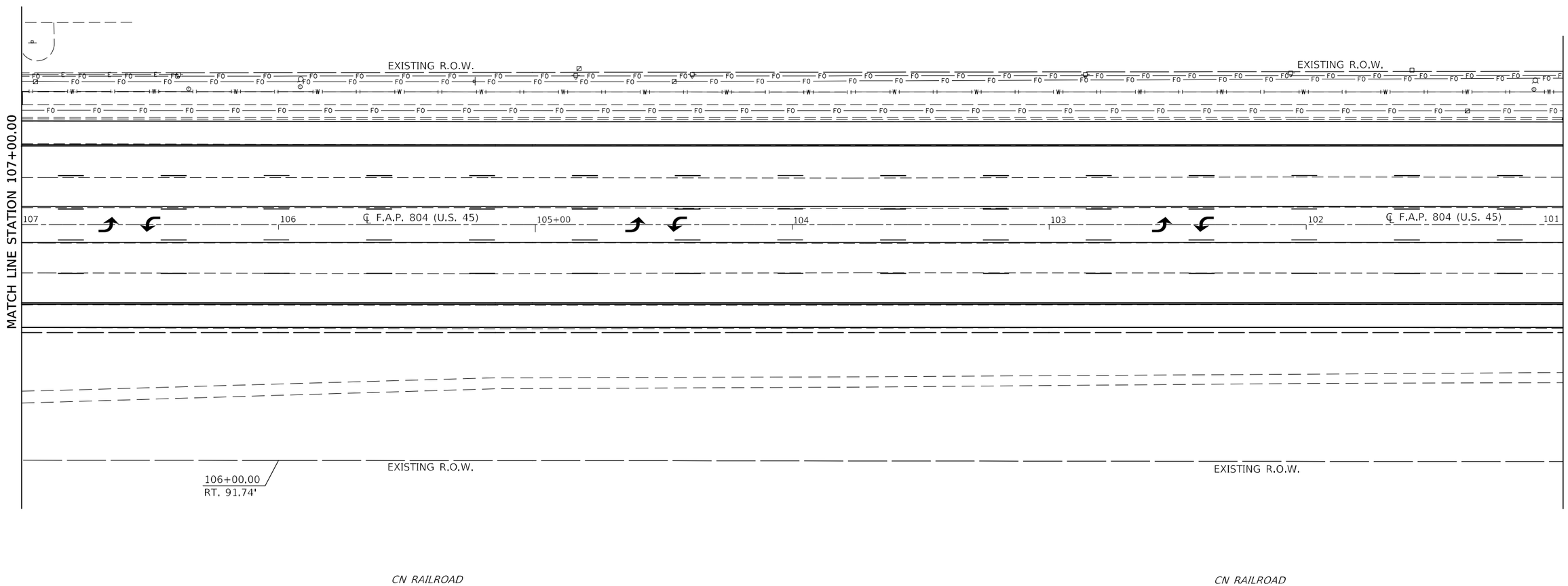

NOTES:
1) SEE TRAFFIC SIGNAL PLAN SHEETS FOR SIGNAL MODERIZATION.
2) SEE ADA RAMP DETAILS FOR PROPOSED ADA SIDEWALK SLOPES.
3) SEE REMOVAL PLAN SHEETS FOR REMOVAL ITEMS.
4) SEE PAVEMENT MARKING PLAN SHEETS FOR PERMANENT STRIPING.
5) SEE SODDING AND EROSION PLAN SHEETS LANDSCAPING IMPROVEMENTS.

SEC. 25, T.19N., R.8E., 3RD P.M.

MODEL: $MODELNAME$
FILE NAME: pw:\\ildot-pw.bentley.com:PWIDOT\Documents\IDOT Offices\District 5\Projects\D570991 \CADData\CADsheets\D570991-sht-plan.dgn

USER NAME = Greg.Eaglin	DESIGNED -	REVISED -	
	DRAWN -	REVISED -	
PLOT SCALE = 40.0000 ' / in.	CHECKED -	REVISED -	
PLOT DATE = 6/26/2024	DATE -	REVISED -	

STATE OF ILLINOIS
DEPARTMENT OF TRANSPORTATION

PLAN SHEETS

SCALE: 1" = 20' | SHEET 6 OF 28 SHEETS | STA. 107+00.00 TO STA. 101+00.00

F.A.P. RTE.	SECTION	COUNTY	TOTAL SHEETS	SHEET NO.
804	25RS-6	CHAMPAIGN	306	61
		CONTRACT NO. 70991		
		ILLINOIS	FED. AID PROJECT	

SEC. 25, T.19N., R.8E., 3RD P.M.

NOTE:
PLAN SHEETS ARE SHOWN GOING FROM SOUTH TO NORTH.
THE WEST SIDE IS CALLED LEFT AND THE EAST SIDE CALLED RIGHT.
STATIONS DECREASE FROM SOUTH TO NORTH ON THIS PLAN SHEET.

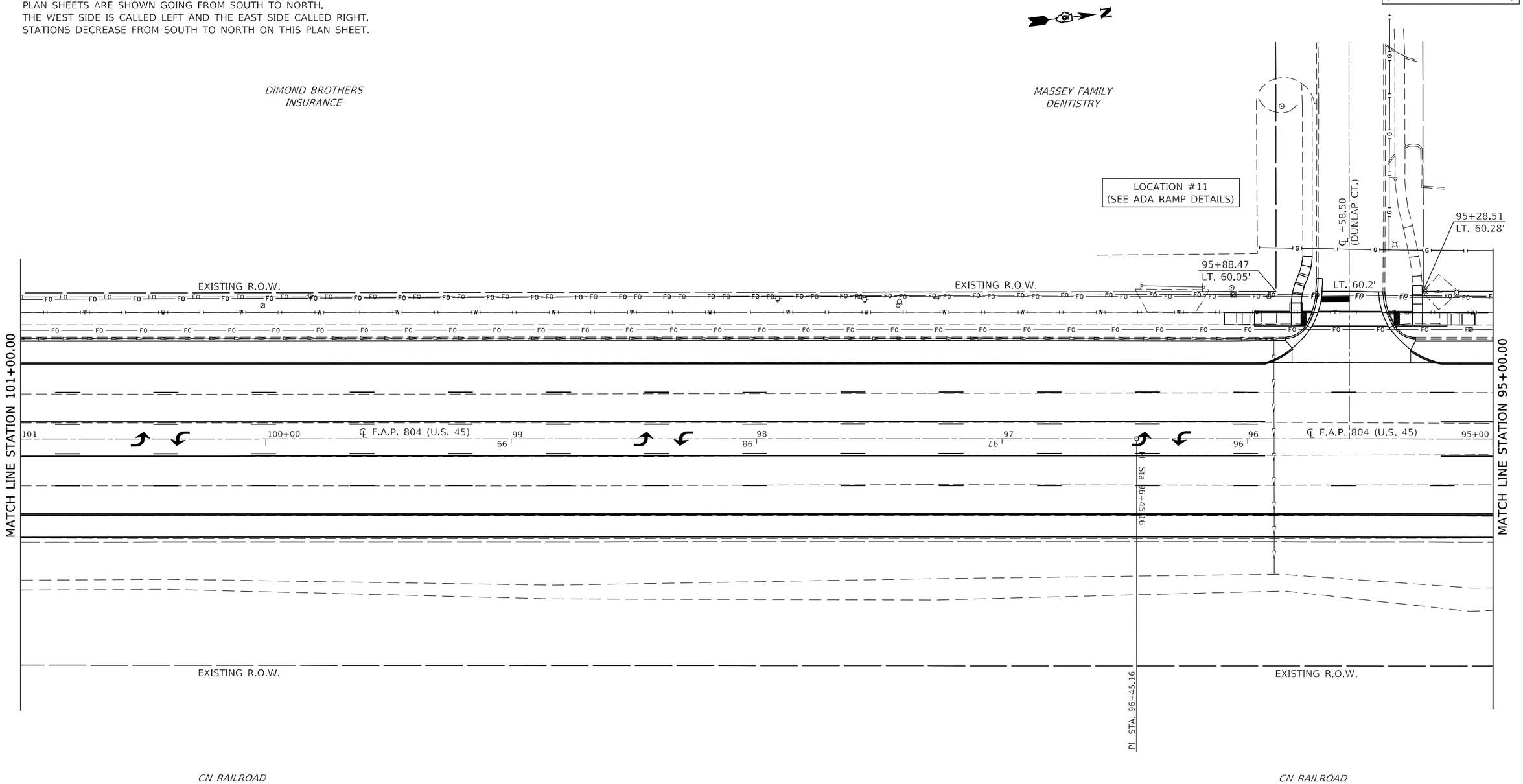

NOTES:
1) SEE TRAFFIC SIGNAL PLAN SHEETS FOR SIGNAL MODERIZATION.
2) SEE ADA RAMP DETAILS FOR PROPOSED ADA SIDEWALK SLOPES.
3) SEE REMOVAL PLAN SHEETS FOR REMOVAL ITEMS.
4) SEE PAVEMENT MARKING PLAN SHEETS FOR PERMANENT STRIPING.
5) SEE SODDING AND EROSION PLAN SHEETS LANDSCAPING IMPROVEMENTS.

SEC. 25, T.19N., R.8E., 3RD P.M.

MODEL: $MODELNAME$
FILE NAME: pw:\\ildot-pw.bentley.com:PWIDOT\Documents\IDOT Offices\District 5\Projects\D57099\CADData\CADsheets\D57099-sht-plan.dgn

USER NAME = Greg.Eaglin	DESIGNED -	REVISED -	
	DRAWN -	REVISED -	
PLOT SCALE = 40.0000 ' / in.	CHECKED -	REVISED -	
PLOT DATE = 6/26/2024	DATE -	REVISED -	

STATE OF ILLINOIS
DEPARTMENT OF TRANSPORTATION

PLAN SHEETS

SCALE: 1" = 20' | SHEET 7 OF 28 SHEETS | STA. 101+00.00 TO STA. 95+00.00

F.A.P. RTE.	SECTION	COUNTY	TOTAL SHEETS	SHEET NO.
804	25RS-6	CHAMPAIGN	306	62
		CONTRACT NO. 70991		
		ILLINOIS FED. AID PROJECT		

SEC. 25, T.19N., R.8E., 3RD P.M.

NOTE:
PLAN SHEETS ARE SHOWN GOING FROM SOUTH TO NORTH.
THE WEST SIDE IS CALLED LEFT AND THE EAST SIDE CALLED RIGHT.
STATIONS DECREASE FROM SOUTH TO NORTH ON THIS PLAN SHEET.

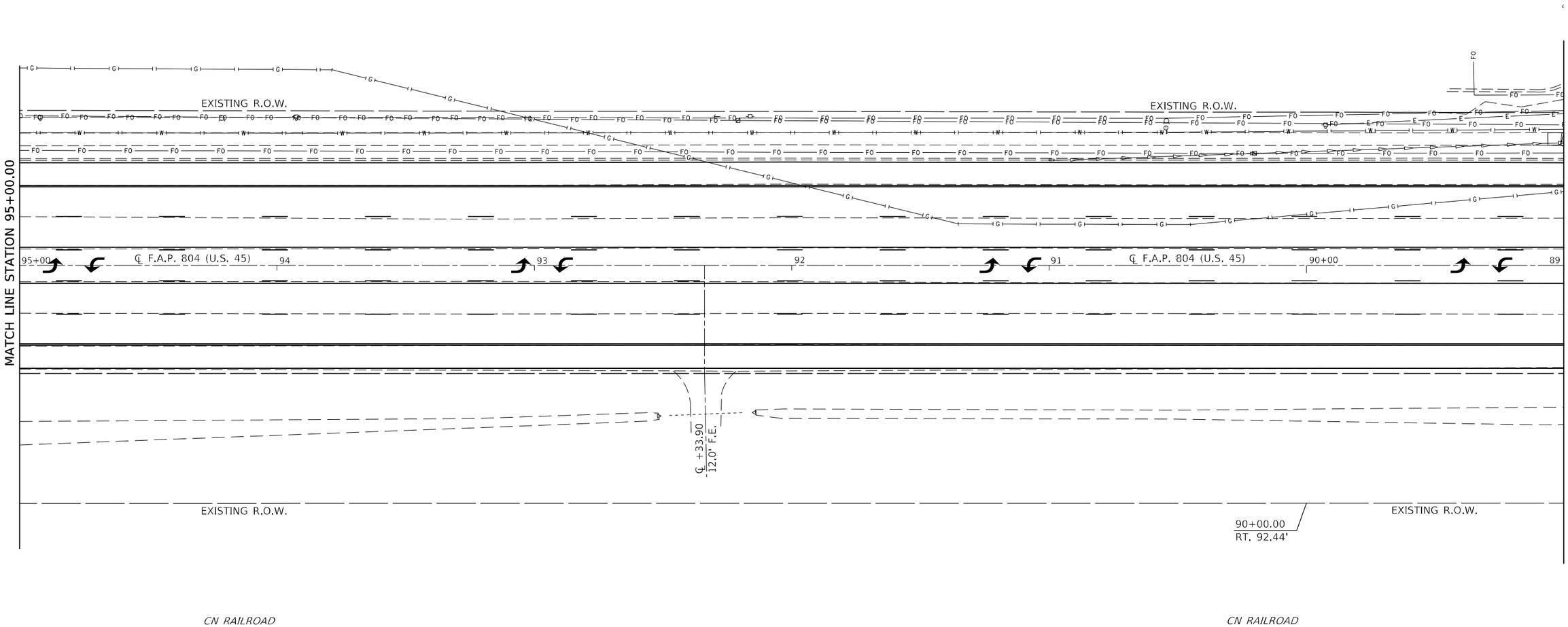

NOTES:
1) SEE TRAFFIC SIGNAL PLAN SHEETS FOR SIGNAL MODERIZATION.
2) SEE ADA RAMP DETAILS FOR PROPOSED ADA SIDEWALK SLOPES.
3) SEE REMOVAL PLAN SHEETS FOR REMOVAL ITEMS.
4) SEE PAVEMENT MARKING PLAN SHEETS FOR PERMANENT STRIPING.
5) SEE SODDING AND EROSION PLAN SHEETS LANDSCAPING IMPROVEMENTS.

SEC. 25, T.19N., R.8E., 3RD P.M.

MODEL: $MODEL$NAMES
FILE NAME: pw:\\ildot-pw.bentley.com:PWIDOT\Documents\IDOT Offices\District 5\Projects\D570993\CADData\CADsheets\D570993-sht-plan.dgn

USER NAME = Greg.Eaglin	DESIGNED -	REVISED -	
	DRAWN -	REVISED -	
PLOT SCALE = 40.0000 ' / in.	CHECKED -	REVISED -	
PLOT DATE = 6/26/2024	DATE -	REVISED -	

STATE OF ILLINOIS
DEPARTMENT OF TRANSPORTATION

PLAN SHEETS

SCALE: 1" = 20' | SHEET 8 OF 28 SHEETS | STA. 95+00.00 TO STA. 89+00.00

F.A.P. RTE.	SECTION	COUNTY	TOTAL SHEETS	SHEET NO.
804	25RS-6	CHAMPAIGN	306	63
		CONTRACT NO. 70991		
		ILLINOIS	FED. AID PROJECT	

SEC. 25, T.19N., R.8E., 3RD P.M.

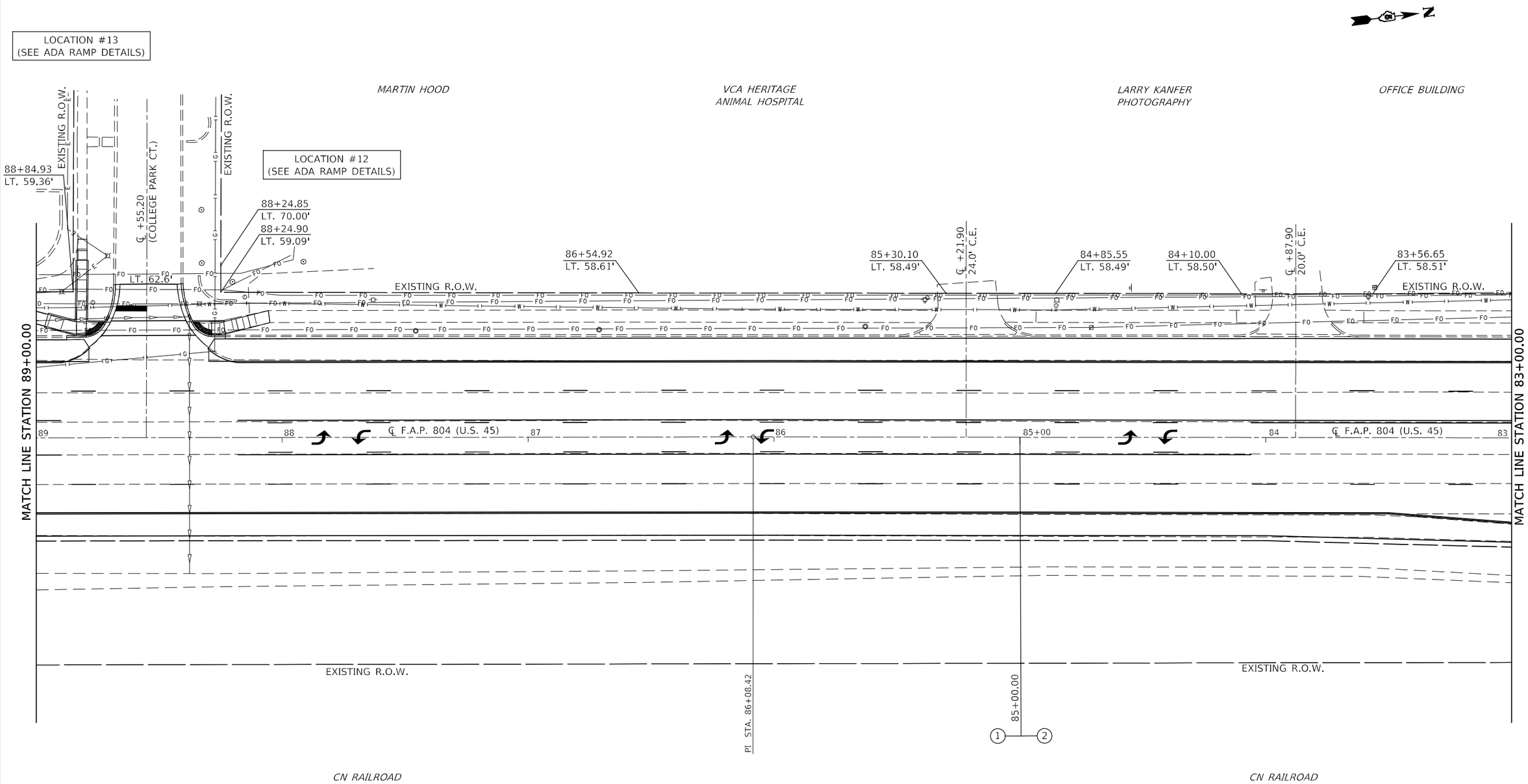

NOTE:
PLAN SHEETS ARE SHOWN GOING FROM SOUTH TO NORTH.
THE WEST SIDE IS CALLED LEFT AND THE EAST SIDE CALLED RIGHT.
STATIONS DECREASE FROM SOUTH TO NORTH ON THIS PLAN SHEET.

SEC. 25, T.19N., R.8E., 3RD P.M.

MODEL: S_MODEL NAMES
FILE NAME: pw:\\ildot-pw.bentley.com:PWIDOT\Documents\IDOT Offices\District 5\Projects\D570991\CADData\CADsheets\D570991-sht-plan.dgn

USER NAME = Greg.Eaglin	DESIGNED -	REVISED -	
	DRAWN -	REVISED -	
PLOT SCALE = 40.0000 ' / in.	CHECKED -	REVISED -	
PLOT DATE = 6/26/2024	DATE -	REVISED -	

STATE OF ILLINOIS
DEPARTMENT OF TRANSPORTATION

PLAN SHEETS

SCALE: 1" = 20' | SHEET 9 OF 28 SHEETS | STA. 89+00.00 TO STA. 83+00.00

F.A.P. RTE.	SECTION	COUNTY	TOTAL SHEETS	SHEET NO.
804	25RS-6	CHAMPAIGN	306	64
		CONTRACT NO. 70991		
		ILLINOIS	FED. AID PROJECT	

NOTE:
PLAN SHEETS ARE SHOWN GOING FROM SOUTH TO NORTH.
THE WEST SIDE IS CALLED LEFT AND THE EAST SIDE CALLED RIGHT.
STATIONS DECREASE FROM SOUTH TO NORTH ON THIS PLAN SHEET.

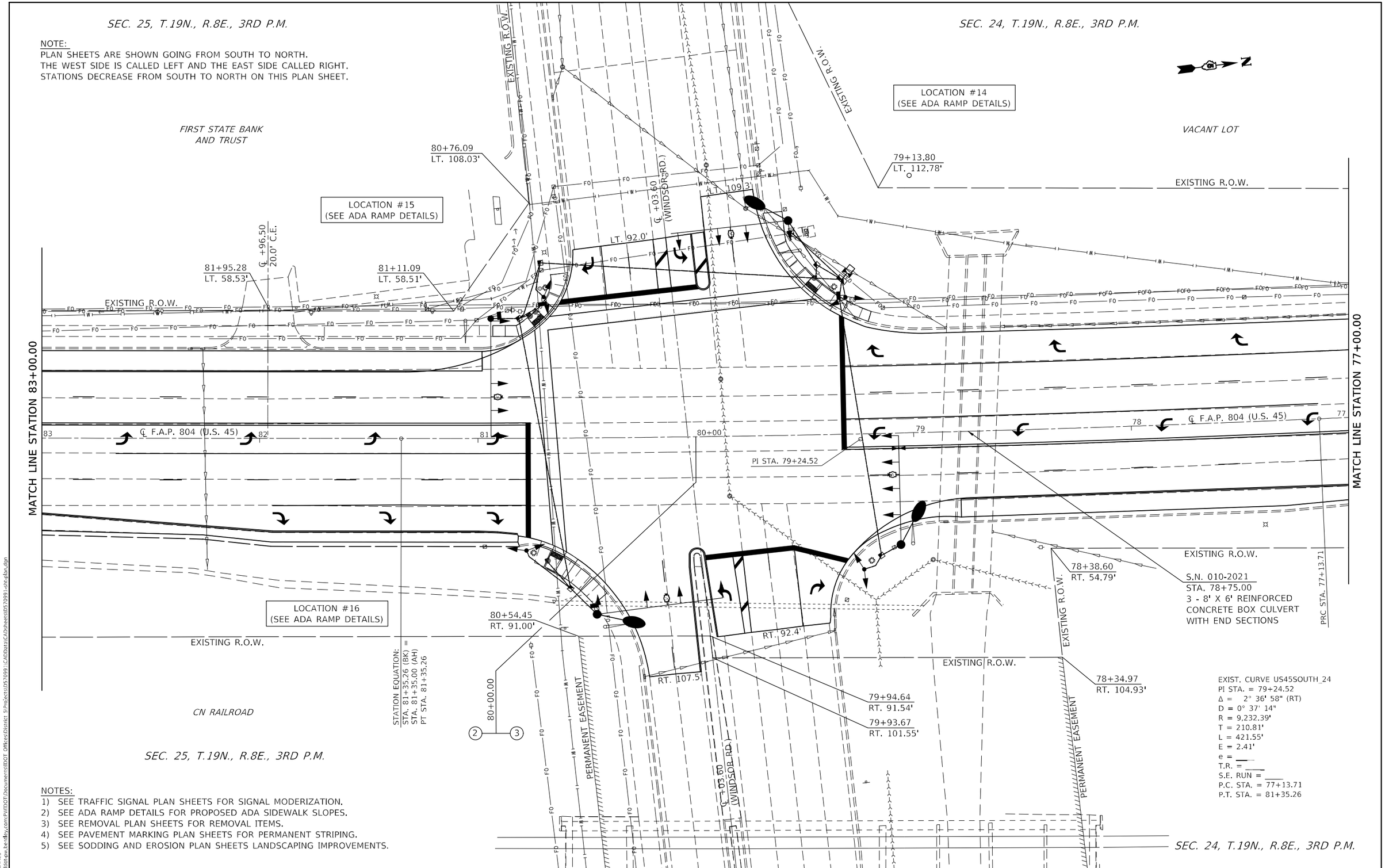

NOTES:
1) SEE TRAFFIC SIGNAL PLAN SHEETS FOR SIGNAL MODERIZATION.
2) SEE ADA RAMP DETAILS FOR PROPOSED ADA SIDEWALK SLOPES.
3) SEE REMOVAL PLAN SHEETS FOR REMOVAL ITEMS.
4) SEE PAVEMENT MARKING PLAN SHEETS FOR PERMANENT STRIPING.
5) SEE SODDING AND EROSION PLAN SHEETS LANDSCAPING IMPROVEMENTS.

MODEL: SMODELNAMES
FILE NAME: pw:\\illinois-pw.bentley.com:PWIDOT\Documents\IDOT Offices\District 5\Projects\D570993\CADData\CADsheets\D570993-sht-plan.dgn

USER NAME = Greg.Eaglin	DESIGNED -	REVISED -	
	DRAWN -	REVISED -	
PLOT SCALE = 40.0000 ' / in.	CHECKED -	REVISED -	
PLOT DATE = 6/26/2024	DATE -	REVISED -	

STATE OF ILLINOIS
DEPARTMENT OF TRANSPORTATION

PLAN SHEETS

SCALE: 1" = 20' | SHEET 10 OF 28 SHEETS | STA. 83+00.00 TO STA. 77+00.00

F.A.P. RTE.	SECTION	COUNTY	TOTAL SHEETS	SHEET NO.
804	25RS-6	CHAMPAIGN	306	65
		CONTRACT NO. 70991		
		ILLINOIS FED. AID PROJECT		

NOTE:
PLAN SHEETS ARE SHOWN GOING FROM SOUTH TO NORTH.
THE WEST SIDE IS CALLED LEFT AND THE EAST SIDE CALLED RIGHT.
STATIONS DECREASE FROM SOUTH TO NORTH ON THIS PLAN SHEET.

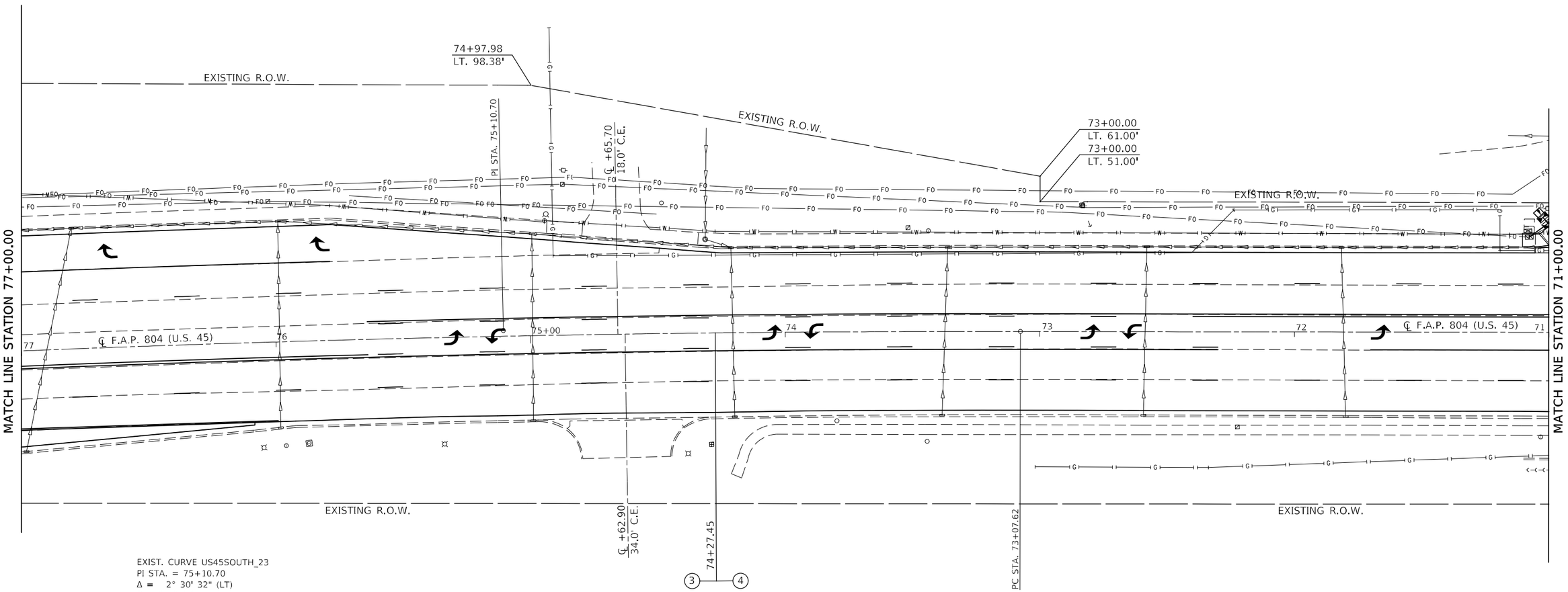

EXIST. CURVE US45SOUTH_23
PI STA. = 75+10.70
Δ = 2° 30' 32" (LT)
D = 0° 37' 04"
R = 9,273.88'
T = 203.08'
L = 406.10'
E = 2.22'
e = ____
T.R. = ____
S.E. RUN = ____
P.C. STA. = 73+07.62
P.T. STA. = 77+13.71

NOTES:
1) SEE TRAFFIC SIGNAL PLAN SHEETS FOR SIGNAL MODERIZATION.
2) SEE ADA RAMP DETAILS FOR PROPOSED ADA SIDEWALK SLOPES.
3) SEE REMOVAL PLAN SHEETS FOR REMOVAL ITEMS.
4) SEE PAVEMENT MARKING PLAN SHEETS FOR PERMANENT STRIPING.
5) SEE SODDING AND EROSION PLAN SHEETS LANDSCAPING IMPROVEMENTS.

MODEL: $MODELNAMES
FILE NAME: pw:\\ildot-pw.bentley.com:PWIDOT\Documents\IDOT Offices\District 5\Project\D57099\CADData\CADsheets\D57099-sht-plan.dgn

USER NAME = Greg.Eaglin	DESIGNED -	REVISED -	
	DRAWN -	REVISED -	
PLOT SCALE = 40.0000 ' / in.	CHECKED -	REVISED -	
PLOT DATE = 6/26/2024	DATE -	REVISED -	

STATE OF ILLINOIS
DEPARTMENT OF TRANSPORTATION

PLAN SHEETS

SCALE: 1" = 20' | SHEET 11 OF 28 SHEETS | STA. 77+00.00 TO STA. 71+00.00

F.A.P. RTE.	SECTION	COUNTY	TOTAL SHEETS	SHEET NO.
804	25RS-6	CHAMPAIGN	306	66

CONTRACT NO. 70991
ILLINOIS | FED. AID PROJECT

SEC. 24, T.19N., R.8E., 3RD P.M.

LOCATION #18
(SEE ADA RAMP DETAILS)

LOCATION #17
(SEE ADA RAMP DETAILS)

US 45 & KNOLLWOOD DRIVE / S.W. QUADRANT
RIGHT-OF-WAY STATION / OFFSETS

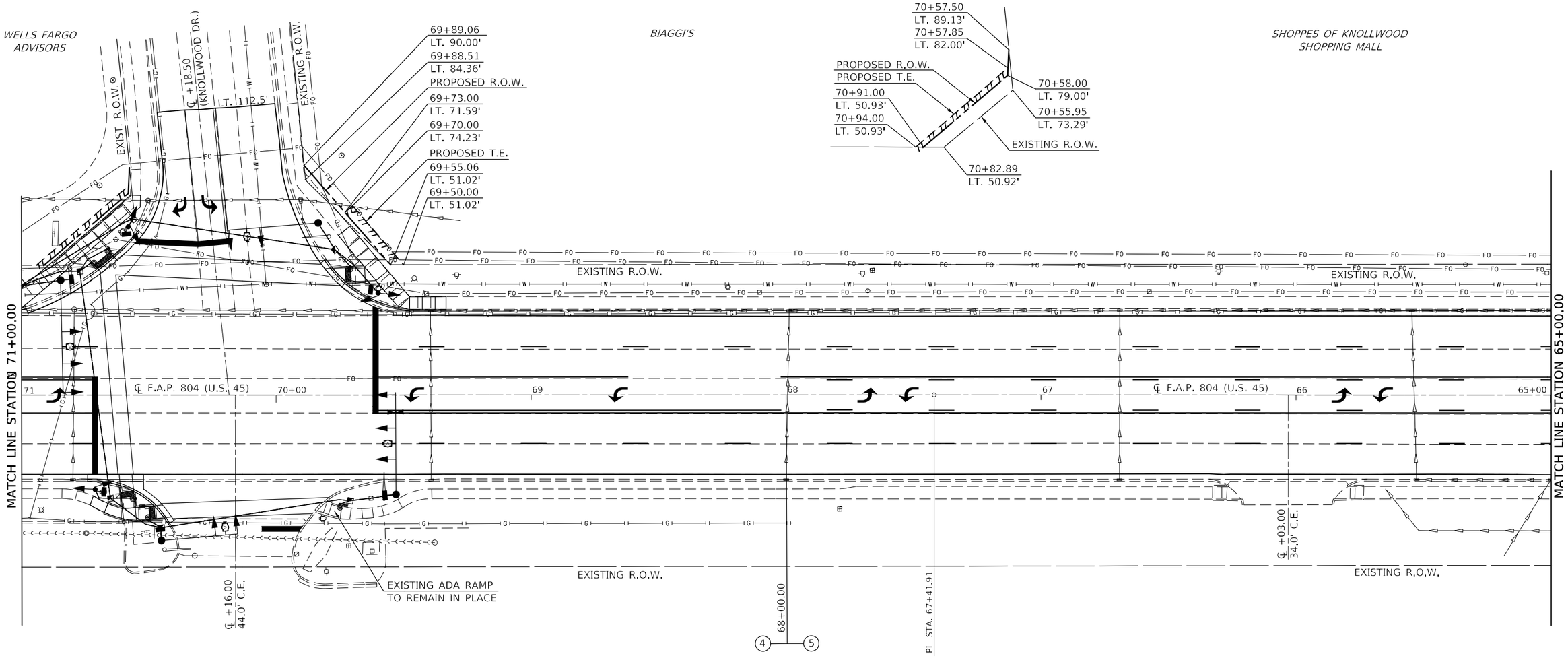

LOCATION #19
(SEE ADA RAMP DETAILS)

CAR-X TIRE &
AUTO SERVICE

PATRICIAS

ELEGANT
NAILS LOUNGE

NOTE:
PLAN SHEETS ARE SHOWN GOING FROM SOUTH TO NORTH.
THE WEST SIDE IS CALLED LEFT AND THE EAST SIDE CALLED RIGHT.
STATIONS DECREASE FROM SOUTH TO NORTH ON THIS PLAN SHEET.

SEC. 24, T.19N., R.8E., 3RD P.M.

NOTES:
1) SEE TRAFFIC SIGNAL PLAN SHEETS FOR SIGNAL MODERIZATION.
2) SEE ADA RAMP DETAILS FOR PROPOSED ADA SIDEWALK SLOPES.
3) SEE REMOVAL PLAN SHEETS FOR REMOVAL ITEMS.
4) SEE PAVEMENT MARKING PLAN SHEETS FOR PERMANENT STRIPING.
5) SEE SODDING AND EROSION PLAN SHEETS LANDSCAPING IMPROVEMENTS.

MODEL: SMODELNAMES
FILE NAME: pw:\\ildot-pw.bentley.com:PWIDOT\Documents\IDOT Offices\District 5\Projects\D57099\CADData\CADsheets\D57099-sht-plan.dgn

USER NAME = Greg.Eaglin	DESIGNED -	REVISED -	
	DRAWN -	REVISED -	
PLOT SCALE = 40.0000 ' / in.	CHECKED -	REVISED -	
PLOT DATE = 6/26/2024	DATE -	REVISED -	

STATE OF ILLINOIS
DEPARTMENT OF TRANSPORTATION

PLAN SHEETS

SCALE: 1" = 20' | SHEET 12 OF 28 SHEETS | STA. 71+00.00 TO STA. 65+00.00

F.A.P. RTE.	SECTION	COUNTY	TOTAL SHEETS	SHEET NO.
804	25RS-6	CHAMPAIGN	306	67
		CONTRACT NO. 70991		
		ILLINOIS	FED. AID PROJECT	

SEC. 24, T.19N., R.8E., 3RD P.M.

NOTE:
PLAN SHEETS ARE SHOWN GOING FROM SOUTH TO NORTH.
THE WEST SIDE IS CALLED LEFT AND THE EAST SIDE CALLED RIGHT.
STATIONS DECREASE FROM SOUTH TO NORTH ON THIS PLAN SHEET.

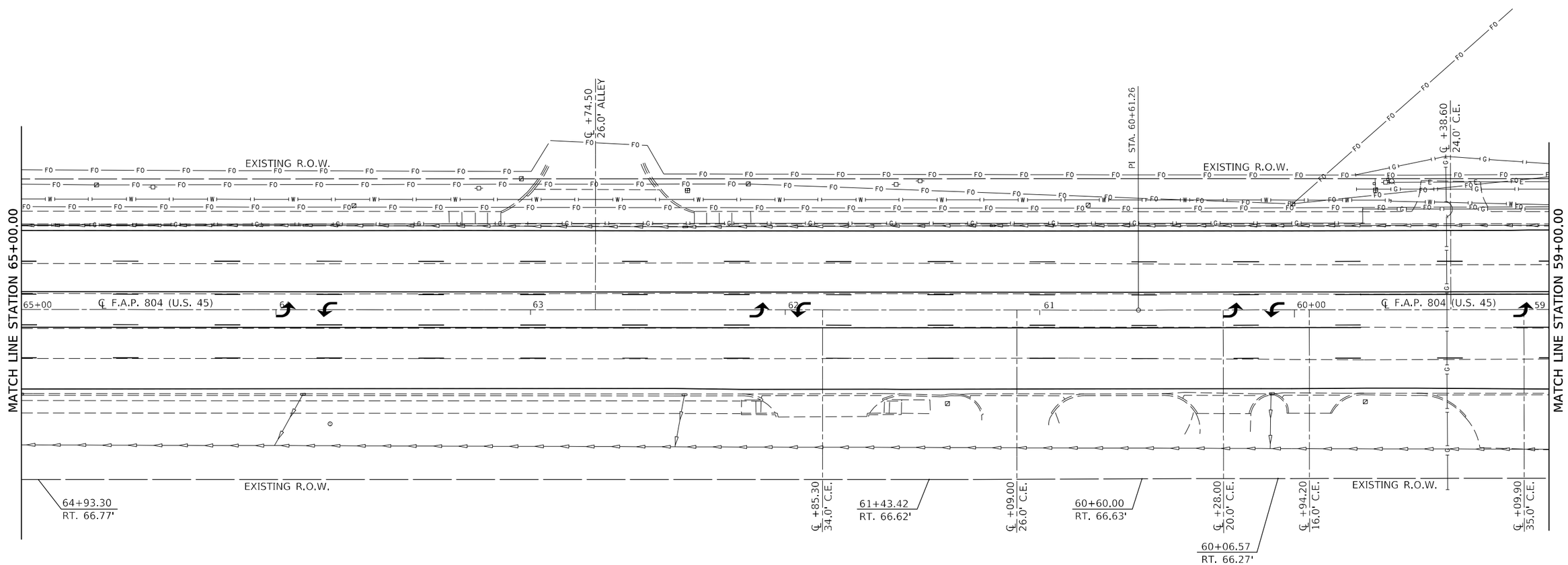

NOTES:
1) SEE TRAFFIC SIGNAL PLAN SHEETS FOR SIGNAL MODERIZATION.
2) SEE ADA RAMP DETAILS FOR PROPOSED ADA SIDEWALK SLOPES.
3) SEE REMOVAL PLAN SHEETS FOR REMOVAL ITEMS.
4) SEE PAVEMENT MARKING PLAN SHEETS FOR PERMANENT STRIPING.
5) SEE SODDING AND EROSION PLAN SHEETS LANDSCAPING IMPROVEMENTS.

SEC. 24, T.19N., R.8E., 3RD P.M.

MODEL: $MODELNAME$
FILE NAME: pw:\\ildot-pw.bentley.com:PWIDOT\Documents\IDOT Offices\District 5\Project\D570991\CADData\CADsheets\D570991-sht-plan.dgn

USER NAME = Greg.Eaglin	DESIGNED -	REVISED -	
	DRAWN -	REVISED -	
PLOT SCALE = 40.0000 ' / in.	CHECKED -	REVISED -	
PLOT DATE = 6/26/2024	DATE -	REVISED -	

STATE OF ILLINOIS
DEPARTMENT OF TRANSPORTATION

PLAN SHEETS

SCALE: 1" = 20' | SHEET 13 OF 28 SHEETS | STA. 65+00.00 TO STA. 59+00.00

F.A.P. RTE.	SECTION	COUNTY	TOTAL SHEETS	SHEET NO.
804	25RS-6	CHAMPAIGN	306	68
		CONTRACT NO. 70991		
		ILLINOIS	FED. AID PROJECT	

SEC. 24, T.19N., R.8E., 3RD P.M.

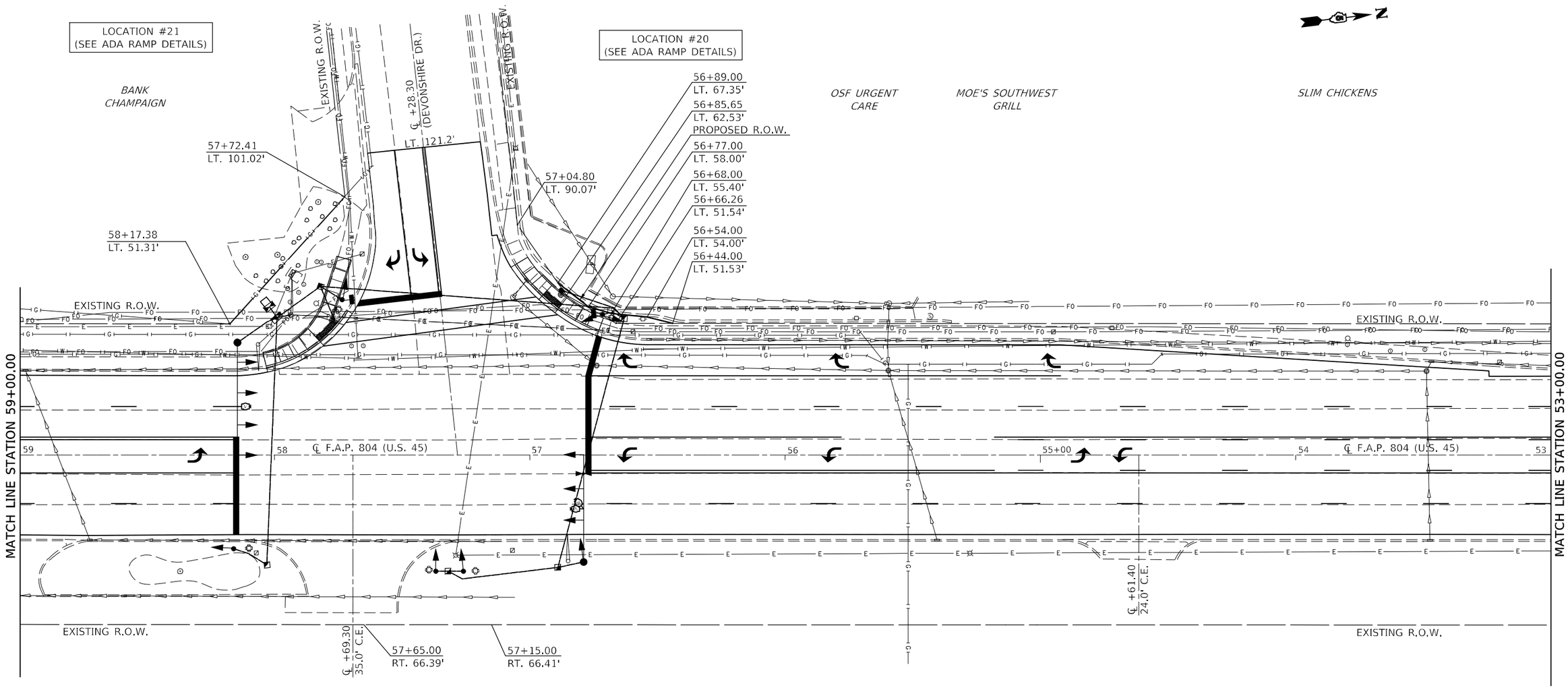

CASTLE HOME COMFORT
HEATING & COOLING

MINI MALL

NOTE:
PLAN SHEETS ARE SHOWN GOING FROM SOUTH TO NORTH.
THE WEST SIDE IS CALLED LEFT AND THE EAST SIDE CALLED RIGHT.
STATIONS DECREASE FROM SOUTH TO NORTH ON THIS PLAN SHEET.

SEC. 24, T.19N., R.8E., 3RD P.M.

NOTES:
1) SEE TRAFFIC SIGNAL PLAN SHEETS FOR SIGNAL MODERIZATION.
2) SEE ADA RAMP DETAILS FOR PROPOSED ADA SIDEWALK SLOPES.
3) SEE REMOVAL PLAN SHEETS FOR REMOVAL ITEMS.
4) SEE PAVEMENT MARKING PLAN SHEETS FOR PERMANENT STRIPING.
5) SEE SODDING AND EROSION PLAN SHEETS LANDSCAPING IMPROVEMENTS.

MODEL: $MODELNAME$
FILE NAME: pw:\\ildot-pw.bentley.com:PWIDOT\Documents\IDOT Offices\District 5\Projects\D57099 - CAD\Data\CAD sheets\D570991-sht-plan.dgn

USER NAME = Greg.Eaglin	DESIGNED -	REVISED -	
	DRAWN -	REVISED -	
PLOT SCALE = 40.0000 ' / in.	CHECKED -	REVISED -	
PLOT DATE = 6/26/2024	DATE -	REVISED -	

STATE OF ILLINOIS
DEPARTMENT OF TRANSPORTATION

PLAN SHEETS

SCALE: 1" = 20' | SHEET 14 OF 28 SHEETS | STA. 59+00.00 TO STA. 53+00.00

F.A.P. RTE.	SECTION	COUNTY	TOTAL SHEETS	SHEET NO.
804	25RS-6	CHAMPAIGN	306	69
		CONTRACT NO. 70991		
		ILLINOIS	FED. AID PROJECT	

SEC. 24, T.19N., R.8E., 3RD P.M.

NOTE:
PLAN SHEETS ARE SHOWN GOING FROM SOUTH TO NORTH.
THE WEST SIDE IS CALLED LEFT AND THE EAST SIDE CALLED RIGHT.
STATIONS DECREASE FROM SOUTH TO NORTH ON THIS PLAN SHEET.

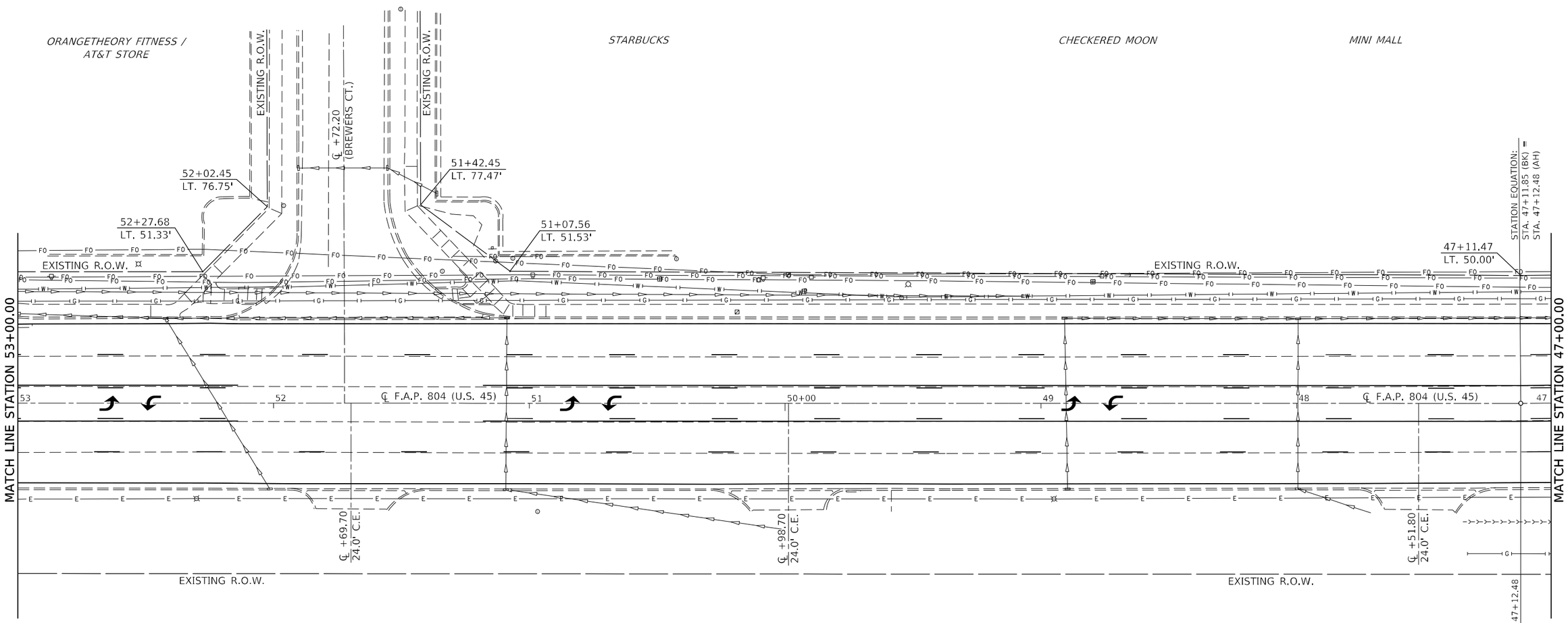

MINI MALL

MINI MALL

NOTES:
1) SEE TRAFFIC SIGNAL PLAN SHEETS FOR SIGNAL MODERIZATION.
2) SEE ADA RAMP DETAILS FOR PROPOSED ADA SIDEWALK SLOPES.
3) SEE REMOVAL PLAN SHEETS FOR REMOVAL ITEMS.
4) SEE PAVEMENT MARKING PLAN SHEETS FOR PERMANENT STRIPING.
5) SEE SODDING AND EROSION PLAN SHEETS LANDSCAPING IMPROVEMENTS.

SEC. 24, T.19N., R.8E., 3RD P.M.

MODEL: SMODELNAMES
FILE NAME: pw:\\illinois-pw.bentley.com:PWIDOT\Documents\IDOT Offices\District 5\Projects\D570991\CADData\CADsheets\D570991-sht-plan.dgn

USER NAME = Greg.Eaglin	DESIGNED -	REVISED -	
	DRAWN -	REVISED -	
PLOT SCALE = 40.0000 ' / in.	CHECKED -	REVISED -	
PLOT DATE = 6/26/2024	DATE -	REVISED -	

STATE OF ILLINOIS
DEPARTMENT OF TRANSPORTATION

PLAN SHEETS

SCALE: 1" = 20' | SHEET 15 OF 28 SHEETS | STA. 53+00.00 TO STA. 47+00.00

F.A.P. RTE.	SECTION	COUNTY	TOTAL SHEETS	SHEET NO.
804	25RS-6	CHAMPAIGN	306	70
		CONTRACT NO. 70991		
		ILLINOIS	FED. AID PROJECT	

SEC. 24, T.19N., R.8E., 3RD P.M.

NOTE:
PLAN SHEETS ARE SHOWN GOING FROM SOUTH TO NORTH.
THE WEST SIDE IS CALLED LEFT AND THE EAST SIDE CALLED RIGHT.
STATIONS DECREASE FROM SOUTH TO NORTH ON THIS PLAN SHEET.

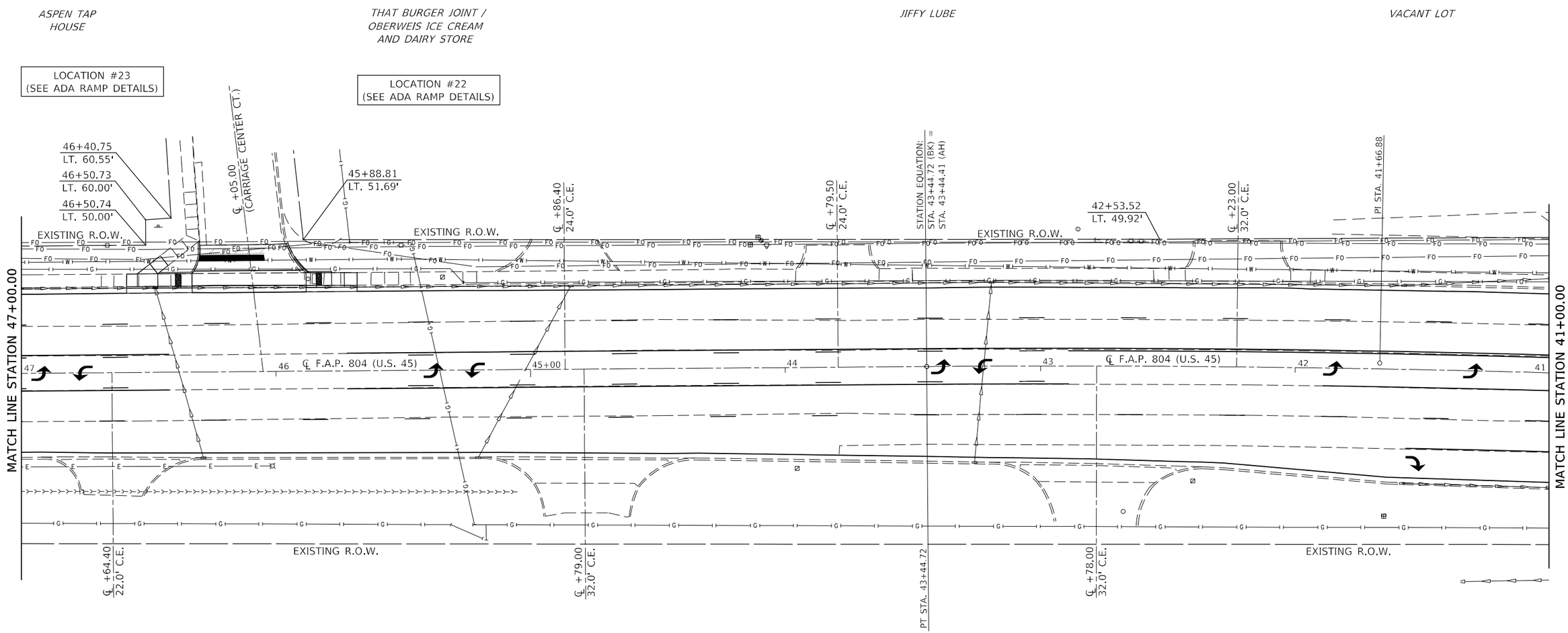

EXIST. CURVE US45SOUTH_12
PI STA. = 41+66.88
Δ = 2° 56' 18" (LT)
D = 0° 49' 33"
R = 6,937.29'
T = 177.92'
L = 355.76'
E = 2.28'
e = ____
T.R. = ____
S.E. RUN = ____
P.C. STA. = 39+88.96
P.T. STA. = 43+44.72

NOTES:
1) SEE TRAFFIC SIGNAL PLAN SHEETS FOR SIGNAL MODERIZATION.
2) SEE ADA RAMP DETAILS FOR PROPOSED ADA SIDEWALK SLOPES.
3) SEE REMOVAL PLAN SHEETS FOR REMOVAL ITEMS.
4) SEE PAVEMENT MARKING PLAN SHEETS FOR PERMANENT STRIPING.
5) SEE SODDING AND EROSION PLAN SHEETS LANDSCAPING IMPROVEMENTS.

SEC. 24, T.19N., R.8E., 3RD P.M.

MODEL: $MODELNAME$
FILE NAME: pw:\\ildot-pw.bentley.com:PWIDOT\Documents\IDOT Offices\District 5\Projects\D57099\CADData\CADsheets\D57099-sht-plan.dgn

USER NAME = Greg.Eaglin	DESIGNED -	REVISED -	
	DRAWN -	REVISED -	
PLOT SCALE = 40.0000 ' / in.	CHECKED -	REVISED -	
PLOT DATE = 6/26/2024	DATE -	REVISED -	

STATE OF ILLINOIS
DEPARTMENT OF TRANSPORTATION

PLAN SHEETS

SCALE: 1" = 20' | SHEET 16 OF 28 SHEETS | STA. 47+00.00 TO STA. 41+00.00

F.A.P. RTE.	SECTION	COUNTY	TOTAL SHEETS	SHEET NO.
804	25RS-6	CHAMPAIGN	306	71
		CONTRACT NO. 70991		
		ILLINOIS	FED. AID PROJECT	

NOTE:
PLAN SHEETS ARE SHOWN GOING FROM SOUTH TO NORTH.
THE WEST SIDE IS CALLED LEFT AND THE EAST SIDE CALLED RIGHT.
STATIONS DECREASE FROM SOUTH TO NORTH ON THIS PLAN SHEET.

SEC. 24, T.19N., R.8E., 3RD P.M.

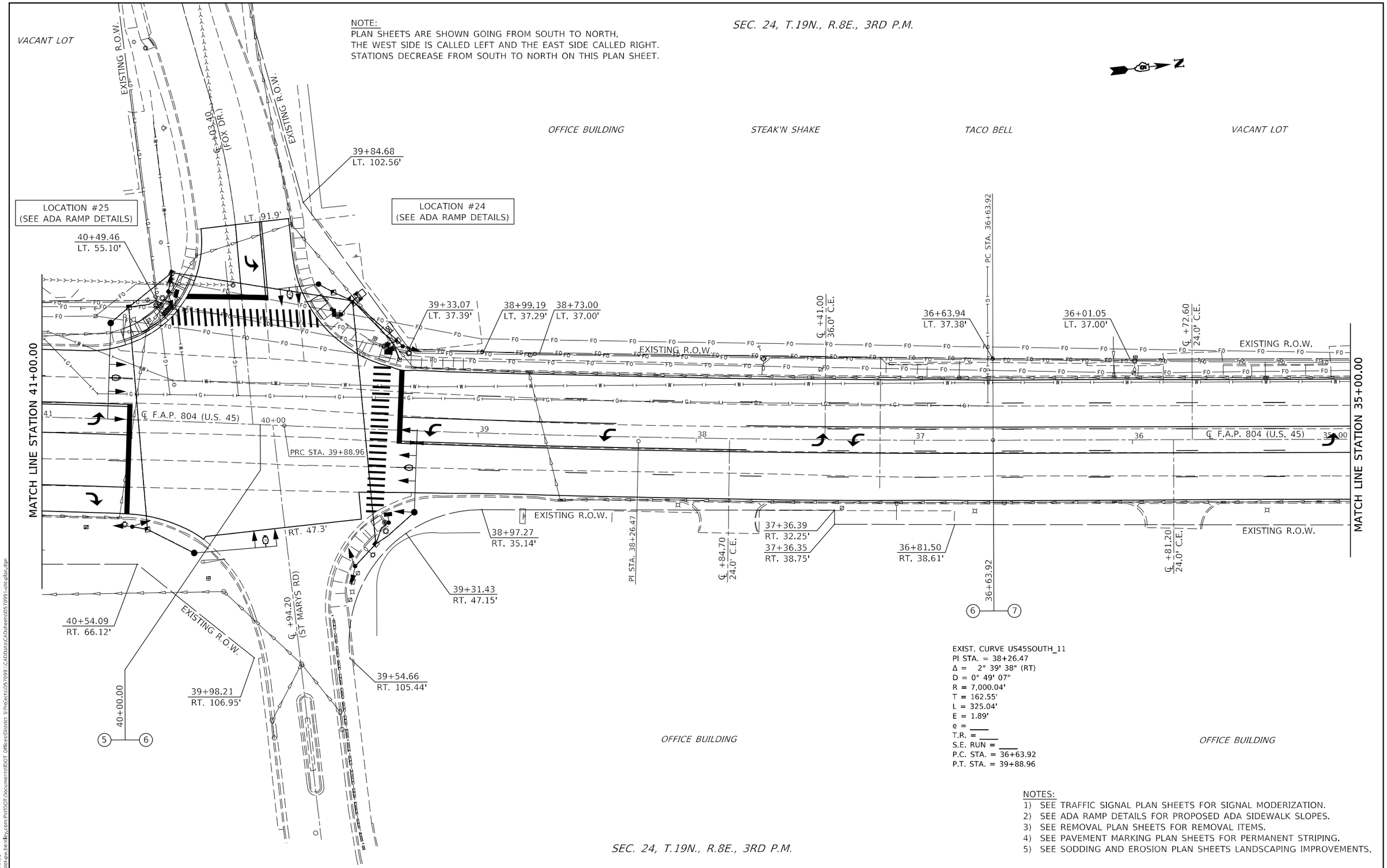

EXIST. CURVE US45SOUTH_11
PI STA. = 38+26.47
Δ = 2° 39' 38" (RT)
D = 0° 49' 07"
R = 7,000.04'
T = 162.55'
L = 325.04'
E = 1.89'
e = ____
T.R. = ____
S.E. RUN = ____
P.C. STA. = 36+63.92
P.T. STA. = 39+88.96

NOTES:
1) SEE TRAFFIC SIGNAL PLAN SHEETS FOR SIGNAL MODERIZATION.
2) SEE ADA RAMP DETAILS FOR PROPOSED ADA SIDEWALK SLOPES.
3) SEE REMOVAL PLAN SHEETS FOR REMOVAL ITEMS.
4) SEE PAVEMENT MARKING PLAN SHEETS FOR PERMANENT STRIPING.
5) SEE SODDING AND EROSION PLAN SHEETS LANDSCAPING IMPROVEMENTS.

SEC. 24, T.19N., R.8E., 3RD P.M.

MODEL: $MODELNAMES
FILE NAME: pw:\\ildot-pw.bentley.com:PWIDOT\Documents\IDOT Offices\District 5\Projects\D57099\CADData\CADsheets\D57099-sht-plan.dgn

USER NAME = Greg.Eaglin	DESIGNED -	REVISED -	
	DRAWN -	REVISED -	
PLOT SCALE = 40.0000 ' / in.	CHECKED -	REVISED -	
PLOT DATE = 6/26/2024	DATE -	REVISED -	

STATE OF ILLINOIS
DEPARTMENT OF TRANSPORTATION

PLAN SHEETS

SCALE: 1" = 20' | SHEET 17 OF 28 SHEETS | STA. 41+00.00 TO STA. 35+00.00

F.A.P. RTE.	SECTION	COUNTY	TOTAL SHEETS	SHEET NO.
804	25RS-6	CHAMPAIGN	306	72

CONTRACT NO. 70991
ILLINOIS | FED. AID PROJECT

SEC. 24, T.19N., R.8E., 3RD P.M.

NOTE:
PLAN SHEETS ARE SHOWN GOING FROM SOUTH TO NORTH.
THE WEST SIDE IS CALLED LEFT AND THE EAST SIDE CALLED RIGHT.
STATIONS DECREASE FROM SOUTH TO NORTH ON THIS PLAN SHEET.

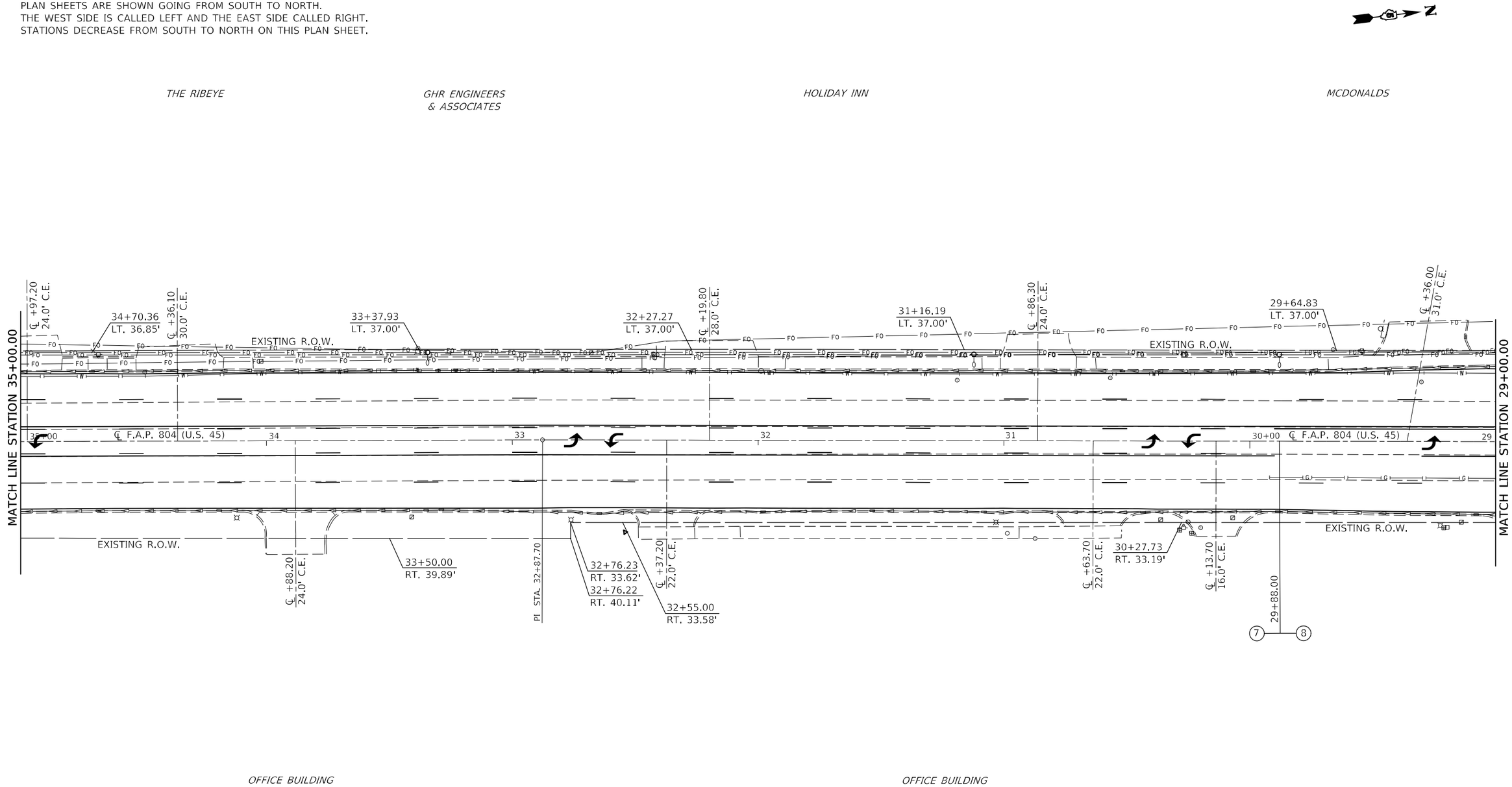

NOTES:
1) SEE TRAFFIC SIGNAL PLAN SHEETS FOR SIGNAL MODERIZATION.
2) SEE ADA RAMP DETAILS FOR PROPOSED ADA SIDEWALK SLOPES.
3) SEE REMOVAL PLAN SHEETS FOR REMOVAL ITEMS.
4) SEE PAVEMENT MARKING PLAN SHEETS FOR PERMANENT STRIPING.
5) SEE SODDING AND EROSION PLAN SHEETS LANDSCAPING IMPROVEMENTS.

SEC. 24, T.19N., R.8E., 3RD P.M.

MODEL: $MODELNAME$
FILE NAME: pw:\\ildot-pw.bentley.com:PWIDOT\Documents\IDOT Offices\District 5\Project\D57099\CADData\CADsheets\D57099-sht-plan.dgn

USER NAME = Greg.Eaglin	DESIGNED -	REVISED -	
	DRAWN -	REVISED -	
PLOT SCALE = 40.0000 ' / in.	CHECKED -	REVISED -	
PLOT DATE = 6/26/2024	DATE -	REVISED -	

STATE OF ILLINOIS
DEPARTMENT OF TRANSPORTATION

PLAN SHEETS

SCALE: 1" = 20' | SHEET 18 OF 28 SHEETS | STA. 35+00.00 TO STA. 29+00.00

F.A.P. RTE.	SECTION	COUNTY	TOTAL SHEETS	SHEET NO.
804	25RS-6	CHAMPAIGN	306	73

CONTRACT NO. 70991

ILLINOIS | FED. AID PROJECT

SEC. 24, T.19N., R.8E., 3RD P.M.

SEC. 13, T.19N., R.8E., 3RD P.M.

NOTES:
1) SEE TRAFFIC SIGNAL PLAN SHEETS FOR SIGNAL MODERIZATION.
2) SEE ADA RAMP DETAILS FOR PROPOSED ADA SIDEWALK SLOPES.
3) SEE REMOVAL PLAN SHEETS FOR REMOVAL ITEMS.
4) SEE PAVEMENT MARKING PLAN SHEETS FOR PERMANENT STRIPING.
5) SEE SODDING AND EROSION PLAN SHEETS LANDSCAPING IMPROVEMENTS.

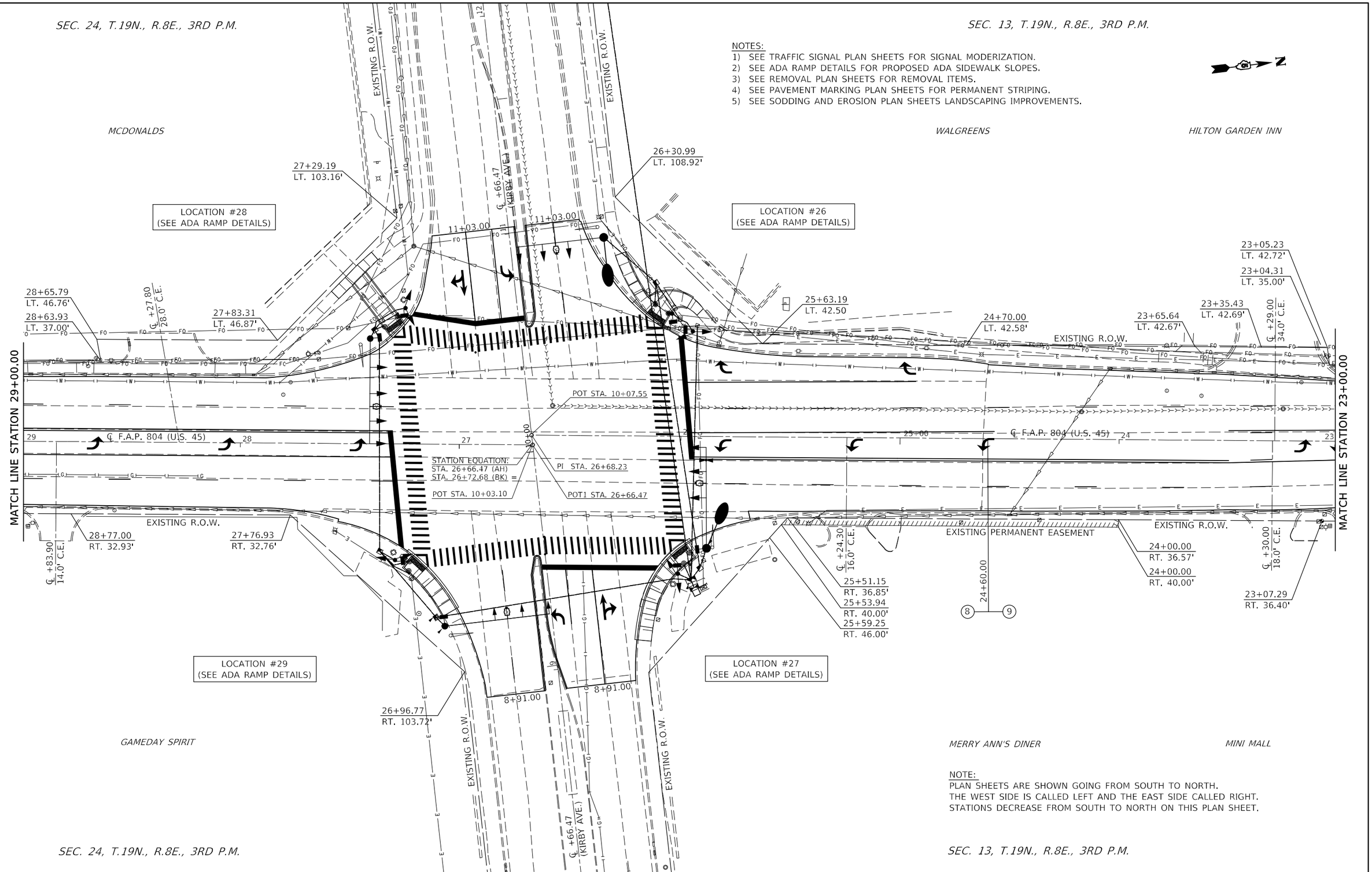

NOTE:
PLAN SHEETS ARE SHOWN GOING FROM SOUTH TO NORTH.
THE WEST SIDE IS CALLED LEFT AND THE EAST SIDE CALLED RIGHT.
STATIONS DECREASE FROM SOUTH TO NORTH ON THIS PLAN SHEET.

SEC. 24, T.19N., R.8E., 3RD P.M.

SEC. 13, T.19N., R.8E., 3RD P.M.

MODEL: $MODEL\NAMES
FILE NAME: pw:\\illinois-pw.bentley.com:PWIDOT\Documents\IDOT Offices\District 5\Projects\D57099\CADData\CADsheets\D57099-sht-plan.dgn

USER NAME = Greg.Eaglin	DESIGNED -	REVISED -	
	DRAWN -	REVISED -	
PLOT SCALE = 40.0000 ' / in.	CHECKED -	REVISED -	
PLOT DATE = 6/26/2024	DATE -	REVISED -	

STATE OF ILLINOIS
DEPARTMENT OF TRANSPORTATION

PLAN SHEETS

SCALE: 1" = 20' | SHEET 19 OF 28 SHEETS | STA. 29+00.00 TO STA. 23+00.00

F.A.P. RTE.	SECTION	COUNTY	TOTAL SHEETS	SHEET NO.
804	25RS-6	CHAMPAIGN	306	74
		CONTRACT NO. 70991		
		ILLINOIS	FED. AID PROJECT	

SEC. 13, T.19N., R.8E., 3RD P.M.

NOTE:
PLAN SHEETS ARE SHOWN GOING FROM SOUTH TO NORTH.
THE WEST SIDE IS CALLED LEFT AND THE EAST SIDE CALLED RIGHT.
STATIONS DECREASE FROM SOUTH TO NORTH ON THIS PLAN SHEET.

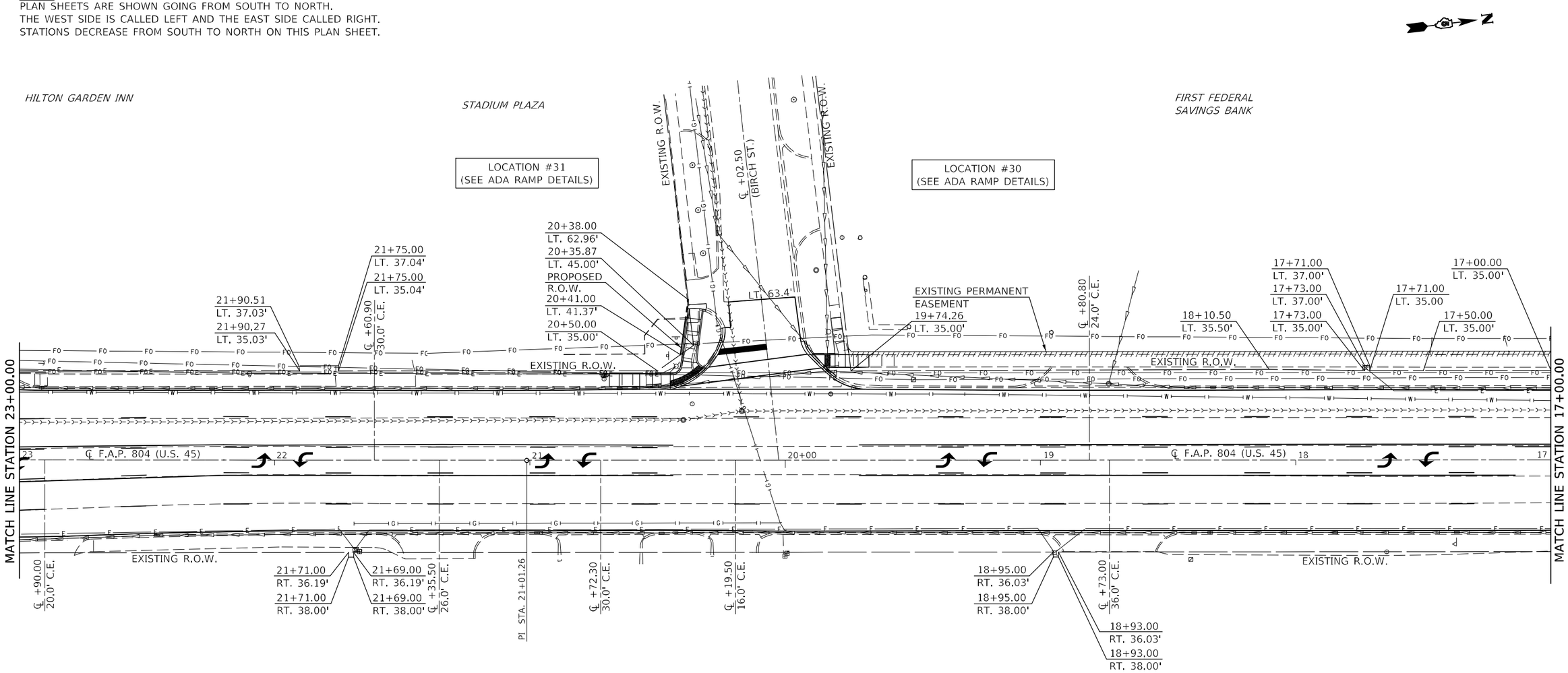

NOTES:
1) SEE TRAFFIC SIGNAL PLAN SHEETS FOR SIGNAL MODERIZATION.
2) SEE ADA RAMP DETAILS FOR PROPOSED ADA SIDEWALK SLOPES.
3) SEE REMOVAL PLAN SHEETS FOR REMOVAL ITEMS.
4) SEE PAVEMENT MARKING PLAN SHEETS FOR PERMANENT STRIPING.
5) SEE SODDING AND EROSION PLAN SHEETS LANDSCAPING IMPROVEMENTS.

SEC. 13, T.19N., R.8E., 3RD P.M.

MODEL: $MODELNAME$
FILE NAME: pw:\\ildot-pw.bentley.com:PWIDOT\Documents\IDOT Offices\District 5\Projects\D57099\CADData\CADsheets\D570991-sht-plan.dgn

USER NAME = Greg.Eaglin	DESIGNED -	REVISED -	
	DRAWN -	REVISED -	
PLOT SCALE = 40.0000 ' / in.	CHECKED -	REVISED -	
PLOT DATE = 6/26/2024	DATE -	REVISED -	

STATE OF ILLINOIS
DEPARTMENT OF TRANSPORTATION

PLAN SHEETS

SCALE: 1" = 20' | SHEET 20 OF 28 SHEETS | STA. 23+00.00 TO STA. 17+00.00

F.A.P. RTE.	SECTION	COUNTY	TOTAL SHEETS	SHEET NO.
804	25RS-6	CHAMPAIGN	306	75
		CONTRACT NO. 70991		
		ILLINOIS	FED. AID PROJECT	

SEC. 13, T.19N., R.8E., 3RD P.M.

NOTE:
PLAN SHEETS ARE SHOWN GOING FROM SOUTH TO NORTH.
THE WEST SIDE IS CALLED LEFT AND THE EAST SIDE CALLED RIGHT.
STATIONS DECREASE FROM SOUTH TO NORTH ON THIS PLAN SHEET.

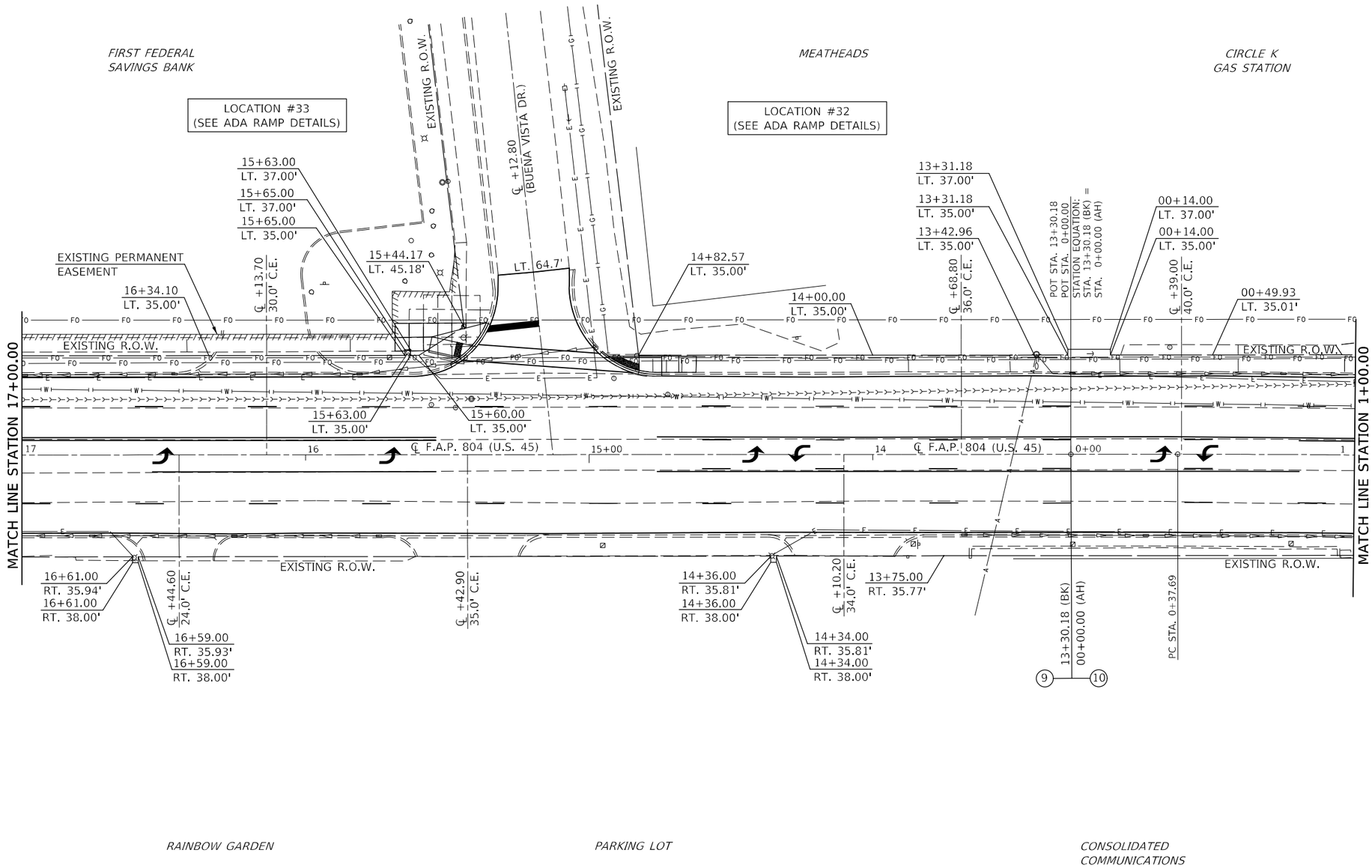

NOTES:
1) SEE TRAFFIC SIGNAL PLAN SHEETS FOR SIGNAL MODERIZATION.
2) SEE ADA RAMP DETAILS FOR PROPOSED ADA SIDEWALK SLOPES.
3) SEE REMOVAL PLAN SHEETS FOR REMOVAL ITEMS.
4) SEE PAVEMENT MARKING PLAN SHEETS FOR PERMANENT STRIPING.
5) SEE SODDING AND EROSION PLAN SHEETS LANDSCAPING IMPROVEMENTS.

SEC. 13, T.19N., R.8E., 3RD P.M.

MODEL: $MODELNAME$
FILE NAME: pw:\\ildot-pw.bentley.com:PWIDOT\Documents\IDOT Offices\District 5\Project\D57099\CADData\CADsheets\D57099-sht-plan.dgn

USER NAME = Greg.Eaglin	DESIGNED -	REVISED -	
	DRAWN -	REVISED -	
PLOT SCALE = 40.0000 ' / in.	CHECKED -	REVISED -	
PLOT DATE = 6/26/2024	DATE -	REVISED -	

STATE OF ILLINOIS
DEPARTMENT OF TRANSPORTATION

PLAN SHEETS

SCALE: 1" = 20' | SHEET 21 OF 28 SHEETS | STA. 17+00.00 TO STA. 1+00.00

F.A.P. RTE.	SECTION	COUNTY	TOTAL SHEETS	SHEET NO.
804	25RS-6	CHAMPAIGN	306	76

CONTRACT NO. 70991

ILLINOIS | FED. AID PROJECT

SEC. 13, T.19N., R.8E., 3RD P.M.

EXISTING R.O.W.

℄ +42.00 (HESSEL BLVD.)

2+28.64
LT. 180.71'

2+75.28
LT. 123.77'

CIRCLE K
GAS STATION

LOCATION #35
(SEE ADA RAMP DETAILS)

LOCATION #34A & 34B
(SEE ADA RAMP DETAILS)

LOCATION #36
(SEE ADA RAMP DETAILS)

LT. 150.3'

FIRST FINANCIAL
BANK

PAPA DELS
PIZZA FACTORY

PAPA DELS
PARKING LOT

LOCATION #39
(SEE ADA RAMP DETAILS)

LOCATION #40
(SEE ADA RAMP DETAILS)

℄ +34.30 (AVONDALE AVE.)

LT. 183.0'

6+57.33
LT. 50.00'
6+57.51
LT. 48.82'
PROPOSED
R.O.W.
6+70.00
LT. 50.50'
6+70.00
LT. 49.36'

3+60.00
LT. 46.44'

3+94.97
LT. 37.43'
3+95.51
LT. 34.48'

PRC STA. 4+47.48

℄ +70.30
24.0' C.E.

5+96.64
LT. 46.45'

℄ +14.20
36.0' C.E.

1+51.89
LT. 36.15'

MATCH LINE STATION 1+00.00

MATCH LINE STATION 7+00.00

℄ F.A.P. 804 (U.S. 45)

PI STA. 2+42.67

5+00

℄ +45.00
50.0' C.E.

1+60.00
RT. 34.35'

℄ +04.50
30.0' C.E.

2+23.00
RT. 38.00'

2+94.42
RT. 38.00'

1+20.51
RT. 35.08'

01+49.98

9 10

3+13.05
RT. 45.91'

3+24.89
RT. 65.11'

RT. 96.6'

4+10.96
RT. 83.18'

3+32.06
RT. 103.15'

CONSOLIDATED
COMMUNICATIONS

LOCATION #38
(SEE ADA RAMP DETAILS)

LOCATION #37
(SEE ADA RAMP DETAILS)

℄ +53.50 (STADIUM DR.)

MCCOLLUM PARK

EXIST. CURVE US45NORTH_3
PI STA. = 2+42.67
Δ = 4° 05' 48" (RT)
D = 0° 59' 59"
R = 5,731.36'
T = 204.98'
L = 409.79'
E = 3.66'
e = ____
T.R. = ____
S.E. RUN = ____
P.C. STA. = 0+37.69
P.T. STA. = 4+47.48

NOTES:
1) SEE TRAFFIC SIGNAL PLAN SHEETS FOR SIGNAL MODERIZATION.
2) SEE ADA RAMP DETAILS FOR PROPOSED ADA SIDEWALK SLOPES.
3) SEE REMOVAL PLAN SHEETS FOR REMOVAL ITEMS.
4) SEE PAVEMENT MARKING PLAN SHEETS FOR PERMANENT STRIPING.
5) SEE SODDING AND EROSION PLAN SHEETS LANDSCAPING IMPROVEMENTS.

NOTE:
PLAN SHEETS ARE SHOWN GOING FROM SOUTH TO NORTH.
THE WEST SIDE IS CALLED LEFT AND THE EAST SIDE CALLED RIGHT.
STATIONS INCREASE FROM SOUTH TO NORTH ON THIS PLAN SHEET.

SEC. 13, T.19N., R.8E., 3RD P.M.

SEC. 13, T.19N., R.8E., 3RD P.M.

MODEL: $MODELNAME
FILE NAME: pw:\\ildot-pw.bentley.com:PWIDOT\Documents\IDOT Offices\District 5\Projects\D57099\CADData\CADsheets\D57099-sht-plan.dgn

USER NAME = Greg.Eaglin	DESIGNED -	REVISED -	
	DRAWN -	REVISED -	
PLOT SCALE = 40.0000 ' / in.	CHECKED -	REVISED -	
PLOT DATE = 6/26/2024	DATE -	REVISED -	

STATE OF ILLINOIS
DEPARTMENT OF TRANSPORTATION

PLAN SHEETS

SCALE: 1" = 20' | SHEET 22 OF 28 SHEETS | STA. 1+00.00 TO STA. 7+00.00

F.A.P. RTE.	SECTION	COUNTY	TOTAL SHEETS	SHEET NO.
804	25RS-6	CHAMPAIGN	306	77

CONTRACT NO. 70991

ILLINOIS | FED. AID PROJECT

NOTE:
PLAN SHEETS ARE SHOWN GOING FROM SOUTH TO NORTH.
THE WEST SIDE IS CALLED LEFT AND THE EAST SIDE CALLED RIGHT.
STATIONS INCREASE FROM SOUTH TO NORTH ON THIS PLAN SHEET.

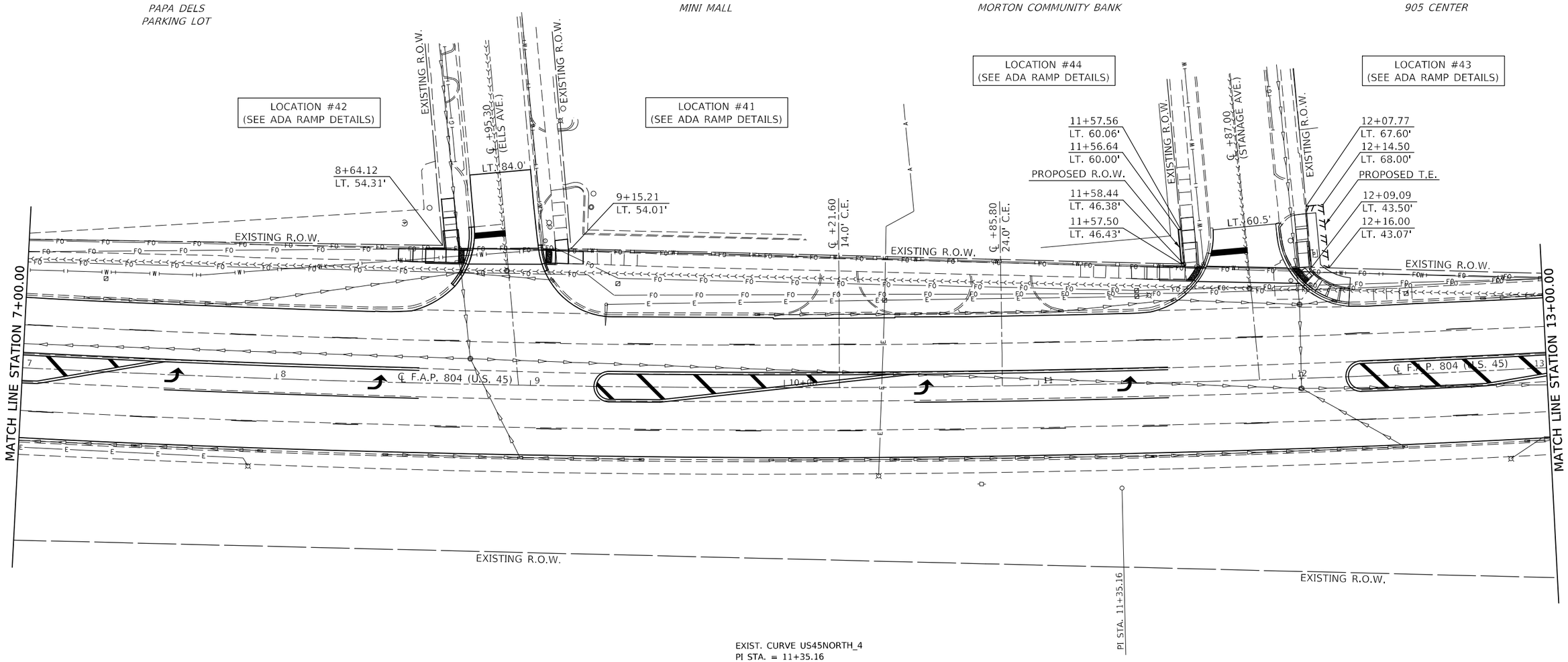

EXIST. CURVE US45NORTH_4
PI STA. = 11+35.16
Δ = 13° 39' 53" (LT)
D = 0° 59' 54"
R = 5,739.43'
T = 687.68'
L = 1,368.83'
E = 41.05'
e = ____
T.R. = ____
S.E. RUN = ____
P.C. STA. = 4+47.48
P.T. STA. = 18+16.31

NOTES:
1) SEE TRAFFIC SIGNAL PLAN SHEETS FOR SIGNAL MODERIZATION.
2) SEE ADA RAMP DETAILS FOR PROPOSED ADA SIDEWALK SLOPES.
3) SEE REMOVAL PLAN SHEETS FOR REMOVAL ITEMS.
4) SEE PAVEMENT MARKING PLAN SHEETS FOR PERMANENT STRIPING.
5) SEE SODDING AND EROSION PLAN SHEETS LANDSCAPING IMPROVEMENTS.

MODEL: SMODELNAMES
FILE NAME: pw:\\ildot-pw.bentley.com:PWIDOT\Documents\IDOT Offices\District 5\Projects\D57099\CADData\CADsheets\D57099-sht-plan.dgn

USER NAME = Greg.Eaglin	DESIGNED -	REVISED -	
	DRAWN -	REVISED -	
PLOT SCALE = 40.0000 ' / in.	CHECKED -	REVISED -	
PLOT DATE = 6/26/2024	DATE -	REVISED -	

STATE OF ILLINOIS
DEPARTMENT OF TRANSPORTATION

PLAN SHEETS

SCALE: 1" = 20' | SHEET 23 OF 28 SHEETS | STA. 7+00.00 TO STA. 13+00.00

F.A.P. RTE.	SECTION	COUNTY	TOTAL SHEETS	SHEET NO.
804	25RS-6	CHAMPAIGN	306	78
		CONTRACT NO. 70991		
		ILLINOIS	FED. AID PROJECT	

SEC. 13, T.19N., R.8E., 3RD P.M.

NOTE:
PLAN SHEETS ARE SHOWN GOING FROM SOUTH TO NORTH.
THE WEST SIDE IS CALLED LEFT AND THE EAST SIDE CALLED RIGHT.
STATIONS INCREASE FROM SOUTH TO NORTH ON THIS PLAN SHEET.

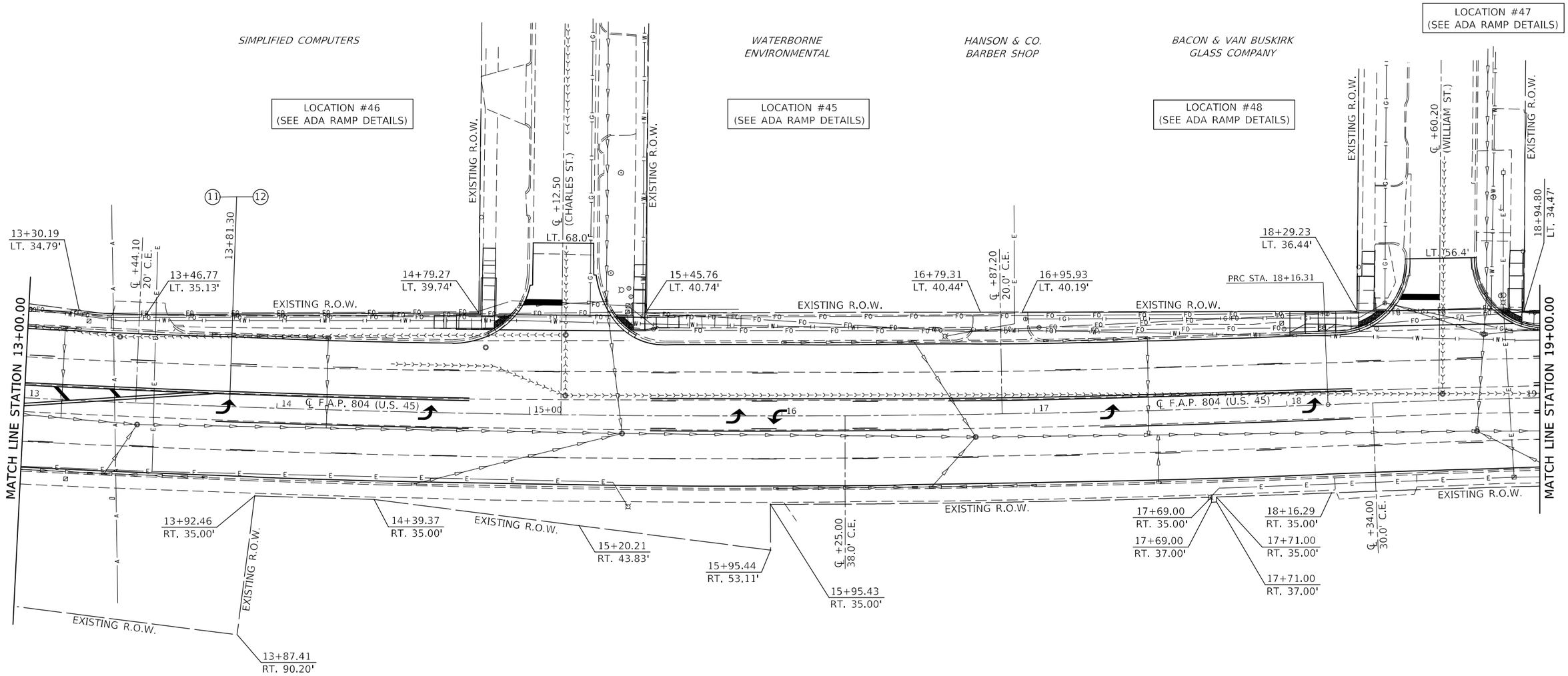

NOTES:
1) SEE TRAFFIC SIGNAL PLAN SHEETS FOR SIGNAL MODERIZATION.
2) SEE ADA RAMP DETAILS FOR PROPOSED ADA SIDEWALK SLOPES.
3) SEE REMOVAL PLAN SHEETS FOR REMOVAL ITEMS.
4) SEE PAVEMENT MARKING PLAN SHEETS FOR PERMANENT STRIPING.
5) SEE SODDING AND EROSION PLAN SHEETS LANDSCAPING IMPROVEMENTS.

SEC. 13, T.19N., R.8E., 3RD P.M.

MODEL: $MODEL$NAMES
FILE NAME: pw:\\ildot-pw.bentley.com:PWIDOT\Documents\IDOT Offices\District 5\Projects\D57099 1\CADData\CADsheets\D57099-sht-plan.dgn

USER NAME = Greg.Eaglin	DESIGNED -	REVISED -	
	DRAWN -	REVISED -	
PLOT SCALE = 40.0000 ' / in.	CHECKED -	REVISED -	
PLOT DATE = 6/26/2024	DATE -	REVISED -	

STATE OF ILLINOIS
DEPARTMENT OF TRANSPORTATION

PLAN SHEETS

SCALE: 1" = 20' | SHEET 24 OF 28 SHEETS | STA. 13+00.00 TO STA. 19+00.00

F.A.P. RTE.	SECTION	COUNTY	TOTAL SHEETS	SHEET NO.
804	25RS-6	CHAMPAIGN	306	79
		CONTRACT NO. 70991		
		ILLINOIS	FED. AID PROJECT	

SEC. 13, T.19N., R.8E., 3RD P.M.

NOTE:
PLAN SHEETS ARE SHOWN GOING FROM SOUTH TO NORTH.
THE WEST SIDE IS CALLED LEFT AND THE EAST SIDE CALLED RIGHT.
STATIONS INCREASE FROM SOUTH TO NORTH ON THIS PLAN SHEET.

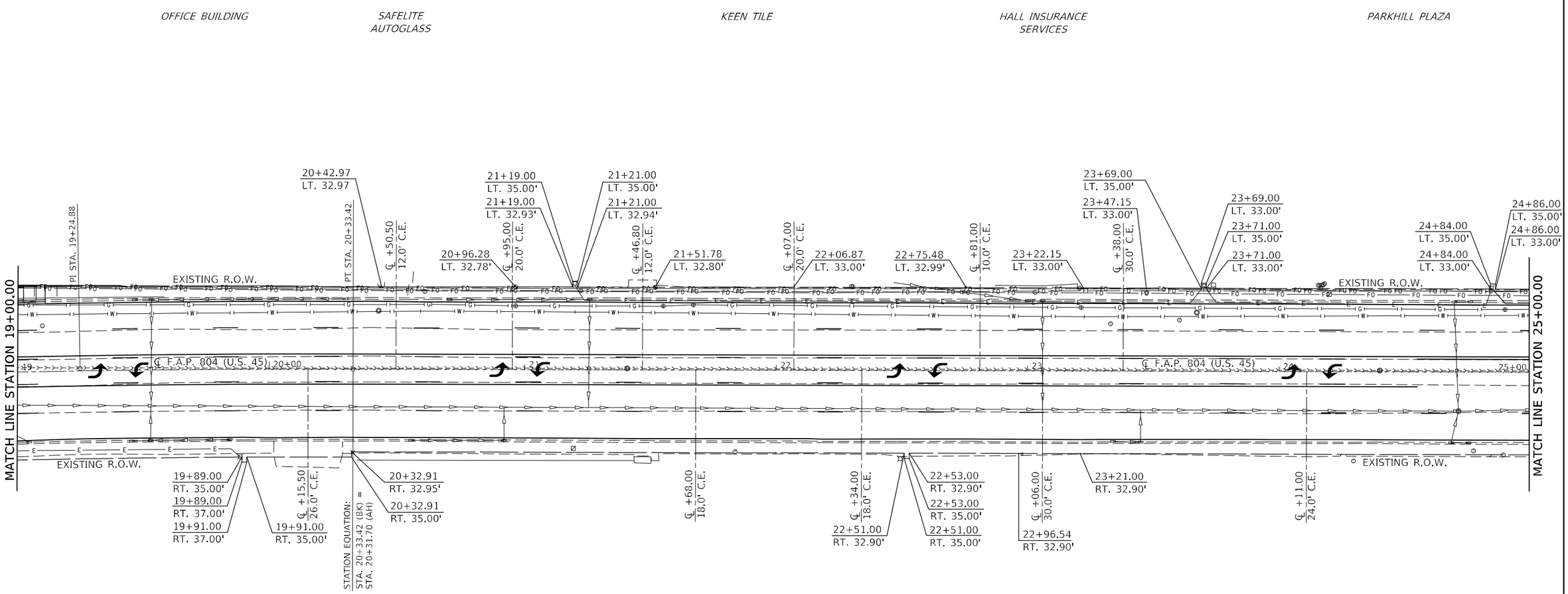

EXIST. CURVE US45NORTH_5
PI STA. = 19+24.88
Δ = 2° 09' 45" (RT)
D = 0° 59' 46"
R = 5,752.38'
T = 108.57'
L = 217.11'
E = 1.02'
e = ____
T.R. = ____
S.E. RUN = ____
P.C. STA. = 18+16.31
P.T. STA. = 20+33.42

NOTES:
1) SEE TRAFFIC SIGNAL PLAN SHEETS FOR SIGNAL MODERIZATION.
2) SEE ADA RAMP DETAILS FOR PROPOSED ADA SIDEWALK SLOPES.
3) SEE REMOVAL PLAN SHEETS FOR REMOVAL ITEMS.
4) SEE PAVEMENT MARKING PLAN SHEETS FOR PERMANENT STRIPING.
5) SEE SODDING AND EROSION PLAN SHEETS LANDSCAPING IMPROVEMENTS.

SEC. 13, T.19N., R.8E., 3RD P.M.

MODEL: $MODELNAME
FILE NAME: pw:\\ildot-pw.bentley.com:PWIDOT\Documents\IDOT Offices\District 5\Projects\D57099\CADData\CADsheets\D57099-sht-plan.dgn

USER NAME = Greg.Eaglin	DESIGNED -	REVISED -	
	DRAWN -	REVISED -	
PLOT SCALE = 40.0000 ' / in.	CHECKED -	REVISED -	
PLOT DATE = 6/26/2024	DATE -	REVISED -	

STATE OF ILLINOIS
DEPARTMENT OF TRANSPORTATION

PLAN SHEETS

SCALE: 1" = 20' | SHEET 25 OF 28 SHEETS | STA. 19+00.00 TO STA. 25+00.00

F.A.P. RTE.	SECTION	COUNTY	TOTAL SHEETS	SHEET NO.
804	25RS-6	CHAMPAIGN	306	80
		CONTRACT NO. 70991		
		ILLINOIS FED. AID PROJECT		

SEC. 13, T.19N., R.8E., 3RD P.M.

NOTE:
PLAN SHEETS ARE SHOWN GOING FROM SOUTH TO NORTH.
THE WEST SIDE IS CALLED LEFT AND THE EAST SIDE CALLED RIGHT.
STATIONS INCREASE FROM SOUTH TO NORTH ON THIS PLAN SHEET.

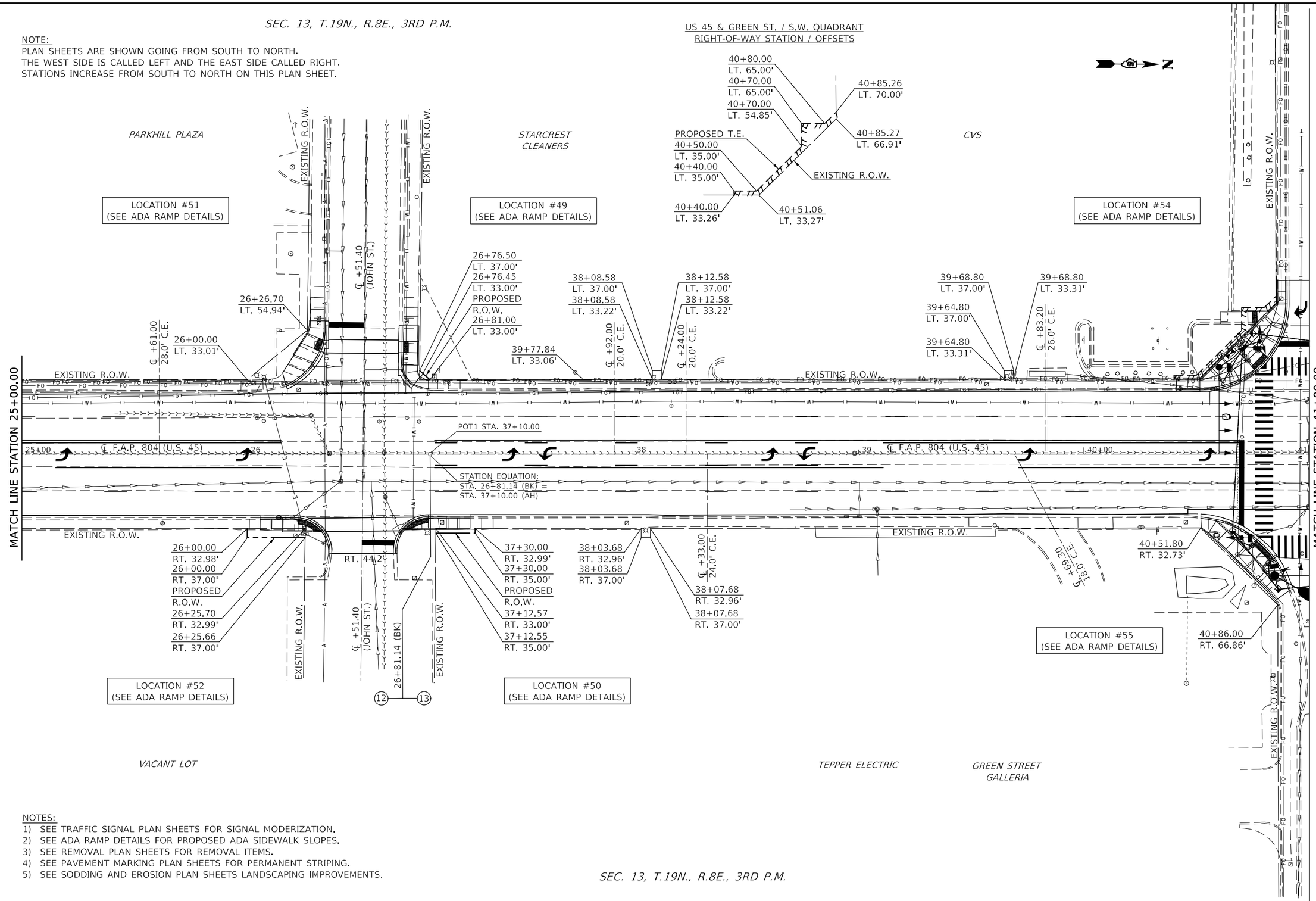

NOTES:
1) SEE TRAFFIC SIGNAL PLAN SHEETS FOR SIGNAL MODERIZATION.
2) SEE ADA RAMP DETAILS FOR PROPOSED ADA SIDEWALK SLOPES.
3) SEE REMOVAL PLAN SHEETS FOR REMOVAL ITEMS.
4) SEE PAVEMENT MARKING PLAN SHEETS FOR PERMANENT STRIPING.
5) SEE SODDING AND EROSION PLAN SHEETS LANDSCAPING IMPROVEMENTS.

SEC. 13, T.19N., R.8E., 3RD P.M.

MODEL: $MODELNAME$
FILE NAME: pw:\\ildot-pw.bentley.com:PWIDOT\Documents\IDOT Offices\District 5\Projects\D57099 (CAD)\Data\CAD\Sheets\D57099-sht-plan.dgn

USER NAME = Greg.Eaglin	DESIGNED -	REVISED -	
	DRAWN -	REVISED -	
PLOT SCALE = 40.0000 ' / in.	CHECKED -	REVISED -	
PLOT DATE = 6/26/2024	DATE -	REVISED -	

STATE OF ILLINOIS
DEPARTMENT OF TRANSPORTATION

PLAN SHEETS

SCALE: 1" = 20' | SHEET 26 OF 28 SHEETS | STA. 25+00.00 TO STA. 41+00.00

F.A.P. RTE.	SECTION	COUNTY	TOTAL SHEETS	SHEET NO.
804	25RS-6	CHAMPAIGN	306	81
		CONTRACT NO. 70991		
		ILLINOIS	FED. AID PROJECT	

SEC. 13, T.19N., R.8E., 3RD P.M.

NOTE:
PLAN SHEETS ARE SHOWN GOING FROM SOUTH TO NORTH.
THE WEST SIDE IS CALLED LEFT AND THE EAST SIDE CALLED RIGHT.
STATIONS INCREASE FROM SOUTH TO NORTH ON THIS PLAN SHEET.

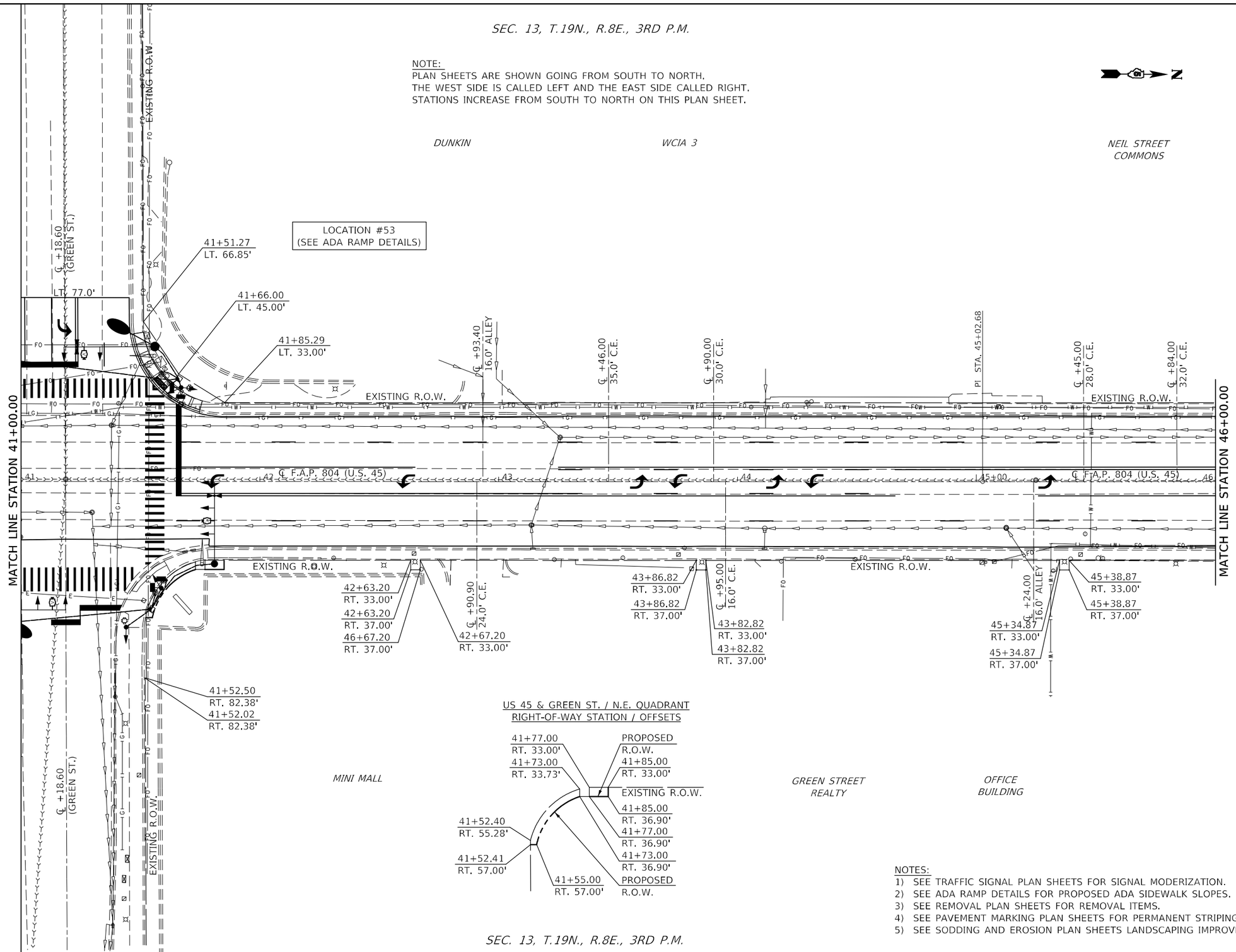

SEC. 13, T.19N., R.8E., 3RD P.M.

NOTES:
1) SEE TRAFFIC SIGNAL PLAN SHEETS FOR SIGNAL MODERIZATION.
2) SEE ADA RAMP DETAILS FOR PROPOSED ADA SIDEWALK SLOPES.
3) SEE REMOVAL PLAN SHEETS FOR REMOVAL ITEMS.
4) SEE PAVEMENT MARKING PLAN SHEETS FOR PERMANENT STRIPING.
5) SEE SODDING AND EROSION PLAN SHEETS LANDSCAPING IMPROVEMENTS.

USER NAME = Greg.Eaglin	DESIGNED -	REVISED -	STATE OF ILLINOIS DEPARTMENT OF TRANSPORTATION
	DRAWN -	REVISED -	
PLOT SCALE = 40.0000 ' / in.	CHECKED -	REVISED -	
PLOT DATE = 6/26/2024	DATE -	REVISED -	

PLAN SHEETS

SCALE: 1" = 20' | SHEET 27 OF 28 SHEETS | STA. 41+00.00 TO STA. 46+00.00

F.A.P. RTE.	SECTION	COUNTY	TOTAL SHEETS	SHEET NO.
804	25RS-6	CHAMPAIGN	306	82
		CONTRACT NO. 70991		
		ILLINOIS FED. AID PROJECT		

MODEL: S_MODEL NAMES
FILE NAME: pw:\\ildot-pw.bentley.com:PWIDOT\Documents\IDOT Offices\District 5\Projects\D57099\CADData\CADsheets\D570991-sht-plan.dgn

SEC. 13, T.19N., R.8E., 3RD P.M.

LOCATION #56
(SEE ADA RAMP DETAILS)

LOCATION #57
(SEE ADA RAMP DETAILS)

US 45 & HEALEY ST. / S.W. QUADRANT
RIGHT-OF-WAY STATION / OFFSETS

PROPOSED T.E.
46+02.00
LT. 39.00'

46+14.00
LT. 39.00'
PROPOSED R.O.W.

46+02.00
LT. 33.00'
46+14.00
LT. 37.00'
46+14.00
LT. 33.00'

46+20.61
LT. 37.00'
46+16.61
LT. 37.00'
46+16.56
LT. 33.00'

TASTY TART

FARMERS INSURANCE

NEIL STREET COMMONS

CHAMPAIGN AUTO SALES

VACANT LOT

MATCH LINE STATION 46+00.00

EXISTING R.O.W.

℄ +53.10 (HEALEY ST.)

LT. 104.0'

℄ F.A.P. 804 (U.S. 45)

47+52.71
LT. 37.00'
47+52.66
LT. 33.00'
47+48.71
LT. 37.00'
47+48.71
LT. 33.00'

47+94.00
LT. 37.00'
47+94.00
LT. 33.00'

℄ +75.00
35.0' C.E.

47+98.00
LT. 33.00'
47+98.00
LT. 37.00'

℄ +28.00
12.0' ALLEY

48+35.51
LT. 37.00'
48+35.46
LT. 33.00'
48+39.51
LT. 37.00'
48+39.46
LT. 33.00'

℄ +63.00
35.0' C.E.

39+00.00
RT. 37.75'

39+03.00
LT. 33.00'

39+72.28
RT. 40.00'

PI STA. 50+00.00

39+94.00
RT. 50.50'

49+22.00
LT. 33.00'

℄ +00.00 (SPRINGFIELD AVE.)

39+94.23
LT. 33.00'

50+43.46
LT. 33.00'

℄ +35.00
24.0' C.E.

47+94.00
RT. 33.00'
47+94.00
RT. 37.00'
47+98.00
RT. 33.00'
47+98.00
RT. 37.00'

℄ +07.00
16.0' ALLEY

48+15.37
RT. 33.00'
48+15.39
RT. 37.00'

48+18.00

℄ +46.00
35.0' C.E.

48+19.37
RT. 33.00'
48+19.39
RT. 37.00'

℄ +87.00
35.0' C.E.

49+27.00
RT. 33.00'

40+82.00
RT. 55.00'

41+04.31
RT. 41.00'

49+00.00
RESURFACING LIMITS END

PI STA. 40+84.63

℄ F.A.P. 804 (U.S. 45)

US 45 & HEALEY ST. / N.W. QUADRANT
RIGHT-OF-WAY STATION / OFFSETS

46+86.91
LT. 59.00'
46+93.00
LT. 59.00'
46+93.00
LT. 39.00'
47+07.00
LT. 39.00'
47+07.00
LT. 33.00'

PROPOSED T.E.
EXISTING R.O.W.

46+86.59
LT. 35.00'

46+86.56
LT. 33.00'
PROPOSED R.O.W.
46+91.00
LT. 33.00'

ADVANCED MEDICAL TRANSPORT

FANNIE MAY CANDIES

SEC. 13, T.19N., R.8E., 3RD P.M.

NOTE:
PLAN SHEETS ARE SHOWN GOING FROM SOUTH TO NORTH.
THE WEST SIDE IS CALLED LEFT AND THE EAST SIDE CALLED RIGHT.
STATIONS INCREASE FROM SOUTH TO NORTH ON THIS PLAN SHEET.

NOTES:
1) SEE TRAFFIC SIGNAL PLAN SHEETS FOR SIGNAL MODERIZATION.
2) SEE ADA RAMP DETAILS FOR PROPOSED ADA SIDEWALK SLOPES.
3) SEE REMOVAL PLAN SHEETS FOR REMOVAL ITEMS.
4) SEE PAVEMENT MARKING PLAN SHEETS FOR PERMANENT STRIPING.
5) SEE SODDING AND EROSION PLAN SHEETS LANDSCAPING IMPROVEMENTS.

MODEL: $MODEL$NAMES
FILE NAME: pw:\\ildot-pw.bentley.com:PWIDOT\Documents\IDOT Offices\District 5\Projects\057099\CADData\CADsheets\057099-sht-plan.dgn

USER NAME = Greg.Eaglin	DESIGNED -	REVISED -	
	DRAWN -	REVISED -	
PLOT SCALE = 40.0000 ' / in.	CHECKED -	REVISED -	
PLOT DATE = 6/26/2024	DATE -	REVISED -	

STATE OF ILLINOIS
DEPARTMENT OF TRANSPORTATION

PLAN SHEETS

SCALE: 1" = 20' | SHEET 28 OF 28 SHEETS | STA. 46+00.00 TO STA. 51+00.00

F.A.P. RTE.	SECTION	COUNTY	TOTAL SHEETS	SHEET NO.
804	25RS-6	CHAMPAIGN	306	83
		CONTRACT NO. 70991		
		ILLINOIS	FED. AID PROJECT	

NOTE:
PLAN SHEETS ARE SHOWN GOING FROM SOUTH TO NORTH.
THE WEST SIDE IS CALLED LEFT AND THE EAST SIDE CALLED RIGHT.
STATIONS DECREASE FROM SOUTH TO NORTH ON THIS PLAN SHEET.

NOTE:
FOR REMOVAL LIMITS AT ADA PEDESTRIAN RAMPS, SEE
ADA PEDESTRIAN RAMP DETAILS FOR STATIONS / OFFSETS.

NOTE:
SEE TRAFFIC SIGNAL PLAN SHEETS FOR REMOVAL ITEMS
ASSOCIATED WITH TRAFFIC SIGNAL MODERNIZATION

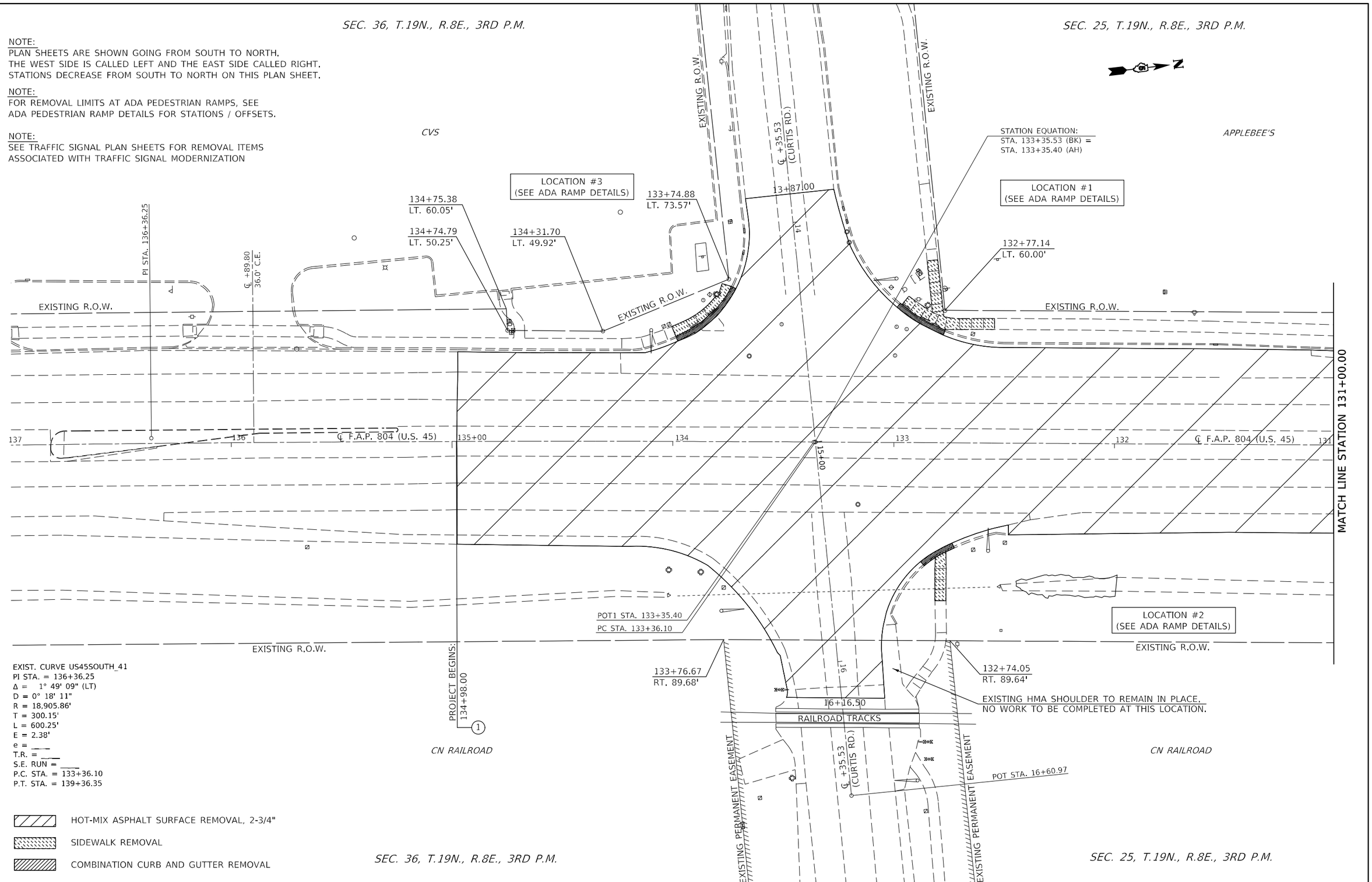

EXIST. CURVE US45SOUTH_41
PI STA. = 136+36.25
Δ = 1° 49' 09" (LT)
D = 0° 18' 11"
R = 18,905.86'
T = 300.15'
L = 600.25'
E = 2.38'
e = ____
T.R. = ____
S.E. RUN = ____
P.C. STA. = 133+36.10
P.T. STA. = 139+36.35

HOT-MIX ASPHALT SURFACE REMOVAL, 2-3/4"

SIDEWALK REMOVAL

COMBINATION CURB AND GUTTER REMOVAL

MODEL: $MODELNAME$
FILE NAME: pw:\\ildot-pw.bentley.com:PWIDOT\Documents\IDOT Offices\District 5\Projects\D757099\CADData\CADSheets\D757099-Sht-Removal.dgn

USER NAME = Greg.Eaglin	DESIGNED -	REVISED -	
	DRAWN -	REVISED -	
PLOT SCALE = 40.0000 ' / in.	CHECKED -	REVISED -	
PLOT DATE = 6/26/2024	DATE -	REVISED -	

STATE OF ILLINOIS
DEPARTMENT OF TRANSPORTATION

REMOVAL PLAN SHEETS

SCALE: 1" = 20' | SHEET 1 OF 28 SHEETS | STA. 137+00.00 TO STA. 131+00.00

F.A.P. RTE.	SECTION	COUNTY	TOTAL SHEETS	SHEET NO.
804	25RS-6	CHAMPAIGN	306	84

CONTRACT NO. 70991

ILLINOIS | FED. AID PROJECT

SEC. 25, T.19N., R.8E., 3RD P.M.

NOTE:
PLAN SHEETS ARE SHOWN GOING FROM SOUTH TO NORTH.
THE WEST SIDE IS CALLED LEFT AND THE EAST SIDE CALLED RIGHT.
STATIONS DECREASE FROM SOUTH TO NORTH ON THIS PLAN SHEET.

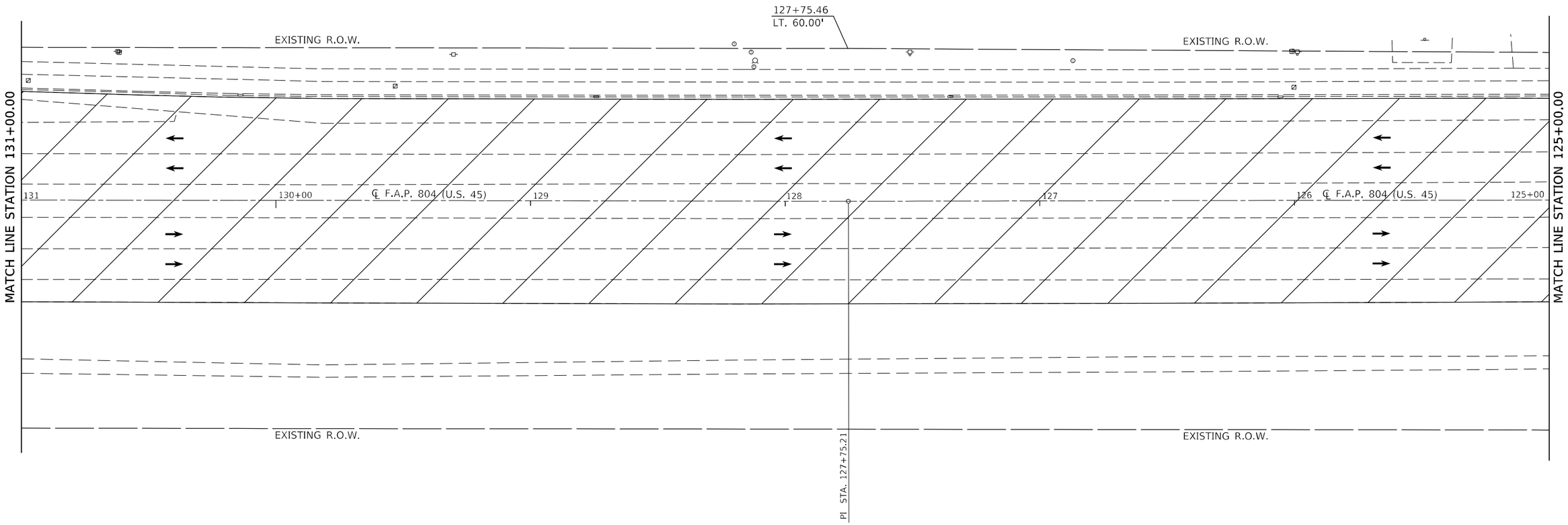

HOT-MIX ASPHALT SURFACE REMOVAL, 2-3/4"

SEC. 25, T.19N., R.8E., 3RD P.M.

MODEL: $MODELNAMES
FILE NAME: pw:\\ildot-pw.bentley.com:PWIDOT\Documents\IDOT Offices\District 5\Projects\D57099\CADData\CADsheets\D57099-Sht-Removal.dgn

USER NAME = Greg.Faglin	DESIGNED -	REVISED -	
	DRAWN -	REVISED -	
PLOT SCALE = 40.0000 ' / in.	CHECKED -	REVISED -	
PLOT DATE = 6/26/2024	DATE -	REVISED -	

STATE OF ILLINOIS
DEPARTMENT OF TRANSPORTATION

REMOVAL PLAN SHEETS

SCALE: 1" = 20' | SHEET 2 OF 28 SHEETS | STA. 131+00.00 TO STA. 125+00.00

F.A.P. RTE.	SECTION	COUNTY	TOTAL SHEETS	SHEET NO.
804	25RS-6	CHAMPAIGN	306	85
		CONTRACT NO. 70991		
		ILLINOIS	FED. AID PROJECT	

SEC. 25, T.19N., R.8E., 3RD P.M.

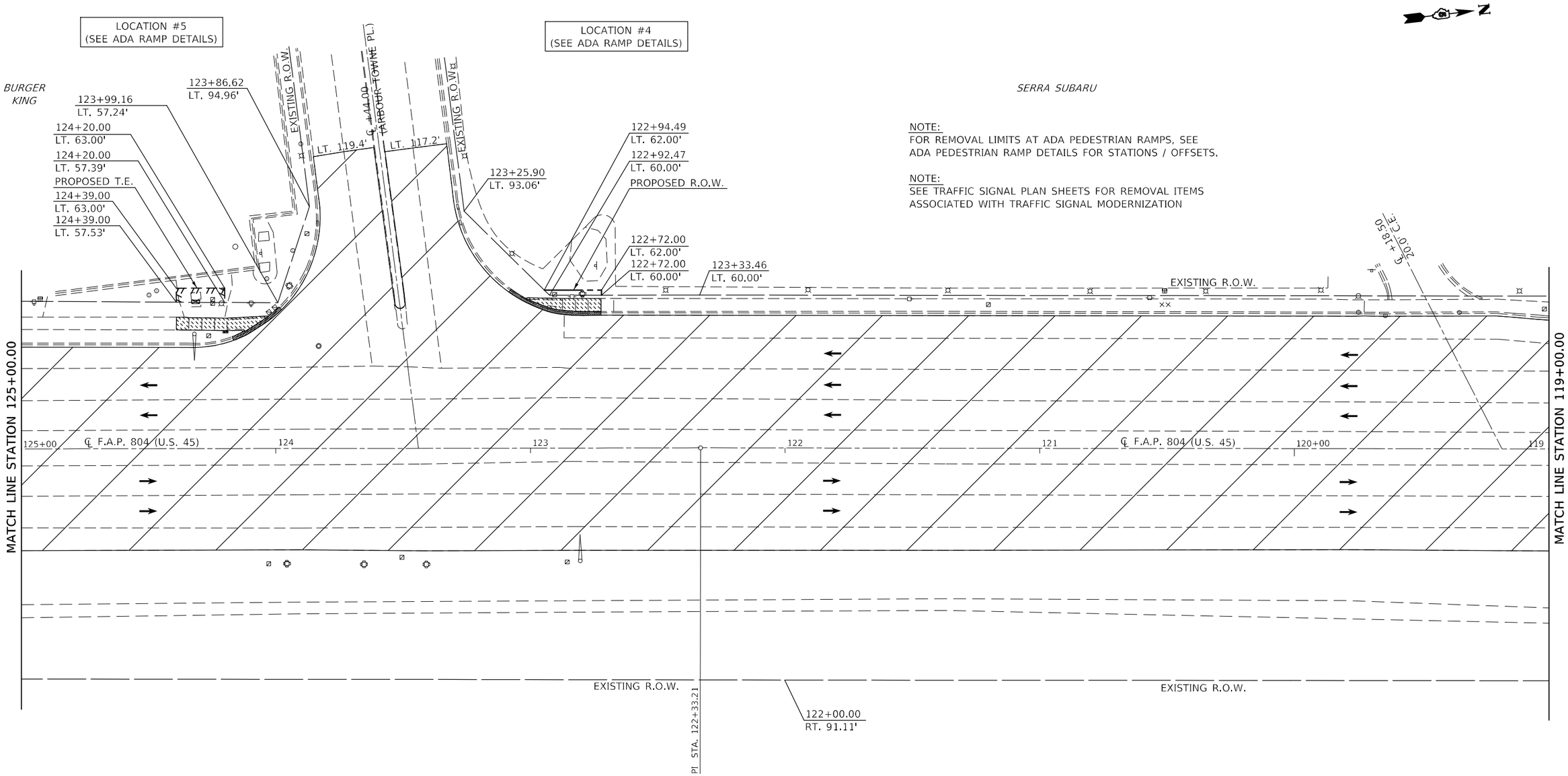

NOTE:
FOR REMOVAL LIMITS AT ADA PEDESTRIAN RAMPS, SEE ADA PEDESTRIAN RAMP DETAILS FOR STATIONS / OFFSETS.

NOTE:
SEE TRAFFIC SIGNAL PLAN SHEETS FOR REMOVAL ITEMS ASSOCIATED WITH TRAFFIC SIGNAL MODERNIZATION

NOTE:
PLAN SHEETS ARE SHOWN GOING FROM SOUTH TO NORTH.
THE WEST SIDE IS CALLED LEFT AND THE EAST SIDE CALLED RIGHT.
STATIONS DECREASE FROM SOUTH TO NORTH ON THIS PLAN SHEET.

HOT-MIX ASPHALT SURFACE REMOVAL, 2-3/4"

SIDEWALK REMOVAL

COMBINATION CURB AND GUTTER REMOVAL

SEC. 25, T.19N., R.8E., 3RD P.M.

MODEL: $MODEL\NAMES
FILE NAME: pw:\\ildot-pw.bentley.com:PWIDOT\Documents\IDOT Offices\District 5\Projects\D57099 1\CADData\CADsheets\D57099-Sht-Removal.dgn

USER NAME = Greg.Eaglin	DESIGNED -	REVISED -	
	DRAWN -	REVISED -	
PLOT SCALE = 40.0000 ' / in.	CHECKED -	REVISED -	
PLOT DATE = 6/26/2024	DATE -	REVISED -	

STATE OF ILLINOIS
DEPARTMENT OF TRANSPORTATION

REMOVAL PLAN SHEETS

SCALE: 1" = 20' | SHEET 3 OF 28 SHEETS | STA. 125+00.00 TO STA. 119+00.00

F.A.P. RTE.	SECTION	COUNTY	TOTAL SHEETS	SHEET NO.
804	25RS-6	CHAMPAIGN	306	86
		CONTRACT NO. 70991		
		ILLINOIS	FED. AID PROJECT	

SEC. 25, T.19N., R.8E., 3RD P.M.

SEC. 25, T.19N., R.8E., 3RD P.M.

NOTE:
PLAN SHEETS ARE SHOWN GOING FROM SOUTH TO NORTH.
THE WEST SIDE IS CALLED LEFT AND THE EAST SIDE CALLED RIGHT.
STATIONS DECREASE FROM SOUTH TO NORTH ON THIS PLAN SHEET.

NOTE:
FOR REMOVAL LIMITS AT ADA PEDESTRIAN RAMPS, SEE
ADA PEDESTRIAN RAMP DETAILS FOR STATIONS / OFFSETS.

NOTE:
SEE TRAFFIC SIGNAL PLAN SHEETS FOR REMOVAL ITEMS
ASSOCIATED WITH TRAFFIC SIGNAL MODERNIZATION

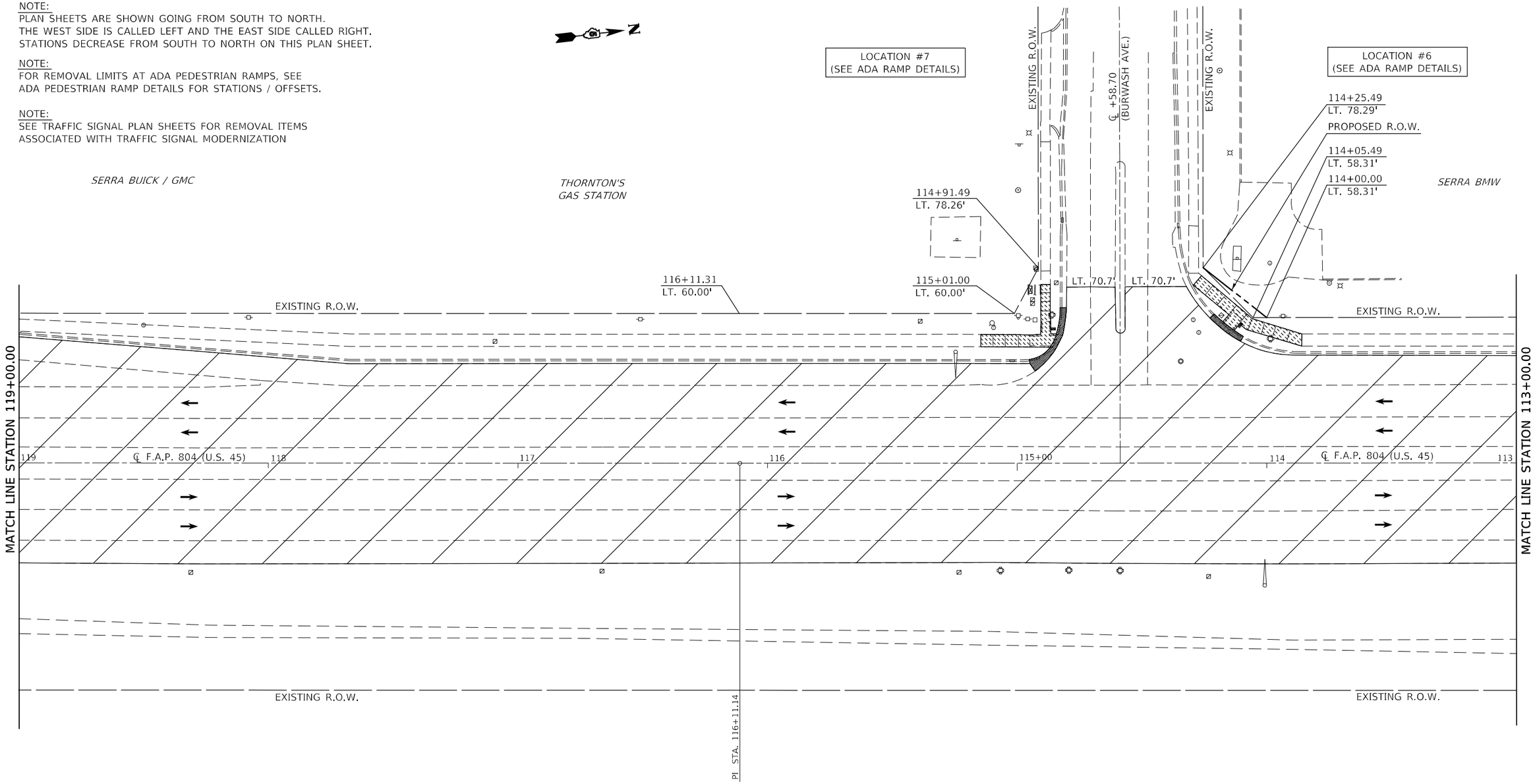

HOT-MIX ASPHALT SURFACE REMOVAL, 2-3/4"

SIDEWALK REMOVAL

COMBINATION CURB AND GUTTER REMOVAL

SEC. 25, T.19N., R.8E., 3RD P.M.

MODEL: $MODELNAME$
FILE NAME: pw:\\ildot-pw.bentley.com:PWIDOT\Documents\IDOT Offices\District 5\Projects\D57099 - CADData\CADsheets\D57099-Sht-Removal.dgn

USER NAME = Greg.Eaglin	DESIGNED -	REVISED -	
	DRAWN -	REVISED -	
PLOT SCALE = 40.0000 ' / in.	CHECKED -	REVISED -	
PLOT DATE = 6/26/2024	DATE -	REVISED -	

STATE OF ILLINOIS
DEPARTMENT OF TRANSPORTATION

REMOVAL PLAN SHEETS

SCALE: 1" = 20' | SHEET 4 OF 28 SHEETS | STA. 119+00.00 TO STA. 113+00.00

F.A.P. RTE.	SECTION	COUNTY	TOTAL SHEETS	SHEET NO.
804	25RS-6	CHAMPAIGN	306	87
		CONTRACT NO. 70991		
		ILLINOIS	FED. AID PROJECT	

SEC. 25, T.19N., R.8E., 3RD P.M.

NOTE:
PLAN SHEETS ARE SHOWN GOING FROM SOUTH TO NORTH.
THE WEST SIDE IS CALLED LEFT AND THE EAST SIDE CALLED RIGHT.
STATIONS DECREASE FROM SOUTH TO NORTH ON THIS PLAN SHEET.

NOTE:
FOR REMOVAL LIMITS AT ADA PEDESTRIAN RAMPS, SEE
ADA PEDESTRIAN RAMP DETAILS FOR STATIONS / OFFSETS.

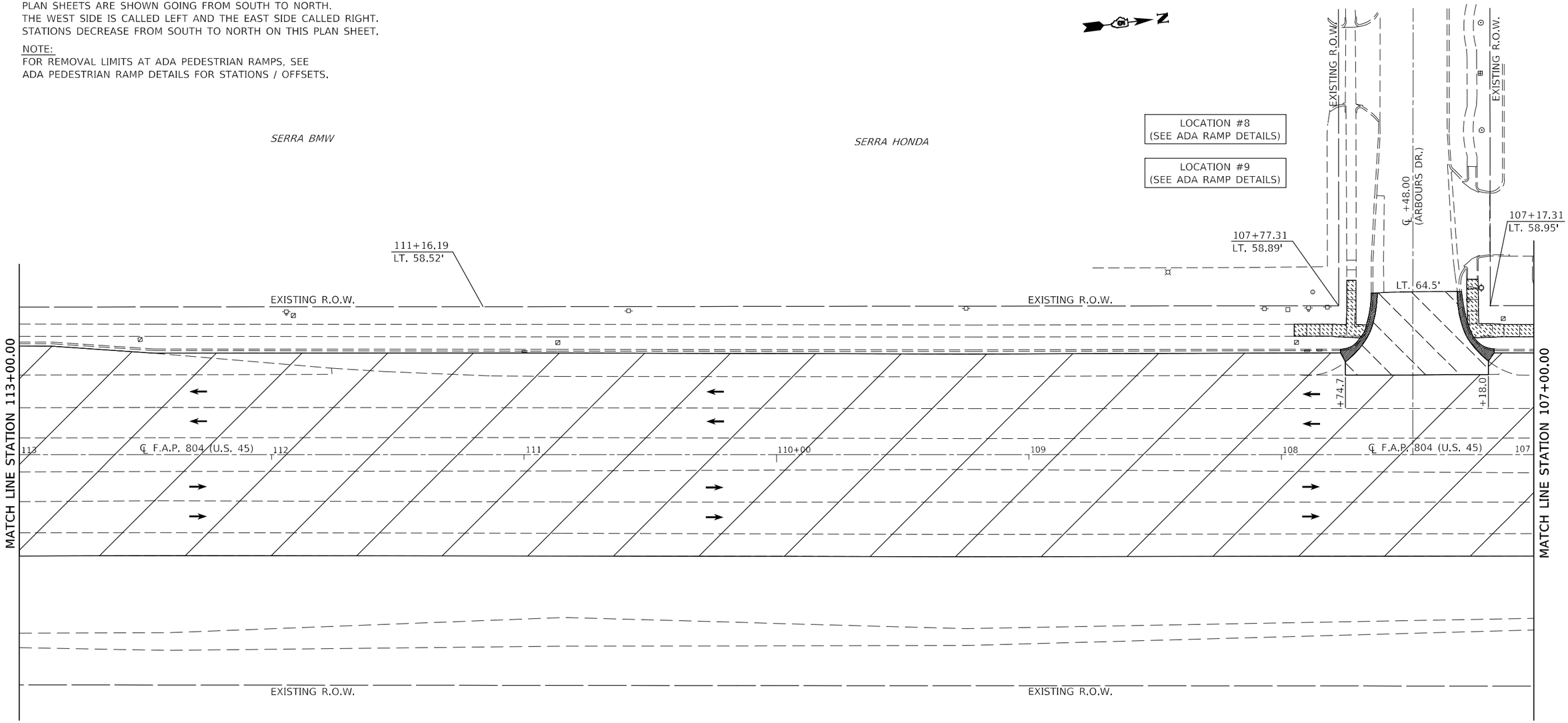

HOT-MIX ASPHALT SURFACE REMOVAL, 2-3/4"

HOT-MIX ASPHALT SURFACE REMOVAL (SPECIAL)

SIDEWALK REMOVAL

COMBINATION CURB AND GUTTER REMOVAL

SEC. 25, T.19N., R.8E., 3RD P.M.

MODEL: $MODELNAME$
FILE NAME: pw:\\ildot-pw.bentley.com:PWIDOT\Documents\IDOT Offices\District 5\Project\D570991 \CADData\CADsheet\D570991-Sht-Removal.dgn

USER NAME = Greg.Eaglin	DESIGNED -	REVISED -	
	DRAWN -	REVISED -	
PLOT SCALE = 40.0000 ' / in.	CHECKED -	REVISED -	
PLOT DATE = 6/26/2024	DATE -	REVISED -	

STATE OF ILLINOIS
DEPARTMENT OF TRANSPORTATION

REMOVAL PLAN SHEETS

SCALE: 1" = 20' | SHEET 5 OF 28 SHEETS | STA. 113+00.00 TO STA. 107+00.00

F.A.P. RTE.	SECTION	COUNTY	TOTAL SHEETS	SHEET NO.
804	25RS-6	CHAMPAIGN	306	88
		CONTRACT NO. 70991		
		ILLINOIS	FED. AID PROJECT	

SEC. 25, T.19N., R.8E., 3RD P.M.

NOTE:
PLAN SHEETS ARE SHOWN GOING FROM SOUTH TO NORTH.
THE WEST SIDE IS CALLED LEFT AND THE EAST SIDE CALLED RIGHT.
STATIONS DECREASE FROM SOUTH TO NORTH ON THIS PLAN SHEET.

NOTE:
FOR REMOVAL LIMITS AT ADA PEDESTRIAN RAMPS, SEE
ADA PEDESTRIAN RAMP DETAILS FOR STATIONS / OFFSETS.

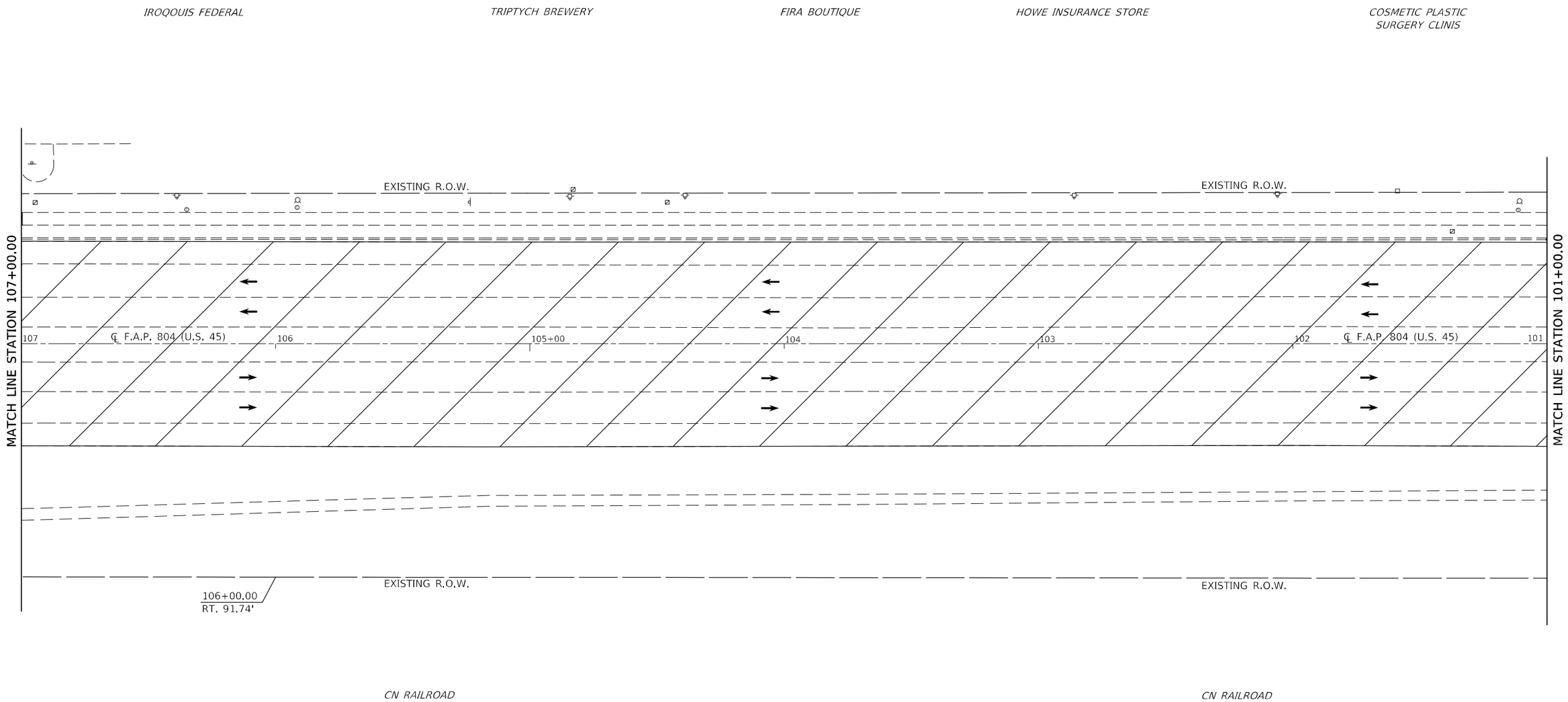

HOT-MIX ASPHALT SURFACE REMOVAL, 2-3/4"

SEC. 25, T.19N., R.8E., 3RD P.M.

MODEL: SMODELNAME
FILE NAME: pw:\\illinois-pw.bentley.com:PWIDOT\Documents\IDOT Offices\District 5\Projects\D570991\CADData\CADsheets\D570991-Sht-Removal.dgn

USER NAME = Greg.Eaglin	DESIGNED -	REVISED -	
	DRAWN -	REVISED -	
PLOT SCALE = 40.0000 ' / in.	CHECKED -	REVISED -	
PLOT DATE = 6/26/2024	DATE -	REVISED -	

STATE OF ILLINOIS
DEPARTMENT OF TRANSPORTATION

REMOVAL PLAN SHEETS

SCALE: 1" = 20' | SHEET 6 OF 28 SHEETS | STA. 107+00.00 TO STA. 101+00.00

F.A.P. RTE.	SECTION	COUNTY	TOTAL SHEETS	SHEET NO.
804	25RS-6	CHAMPAIGN	306	89
		CONTRACT NO. 70991		
		ILLINOIS	FED. AID PROJECT	

SEC. 25, T.19N., R.8E., 3RD P.M.

NOTE:
PLAN SHEETS ARE SHOWN GOING FROM SOUTH TO NORTH.
THE WEST SIDE IS CALLED LEFT AND THE EAST SIDE CALLED RIGHT.
STATIONS DECREASE FROM SOUTH TO NORTH ON THIS PLAN SHEET.

NOTE:
FOR REMOVAL LIMITS AT ADA PEDESTRIAN RAMPS, SEE
ADA PEDESTRIAN RAMP DETAILS FOR STATIONS / OFFSETS.

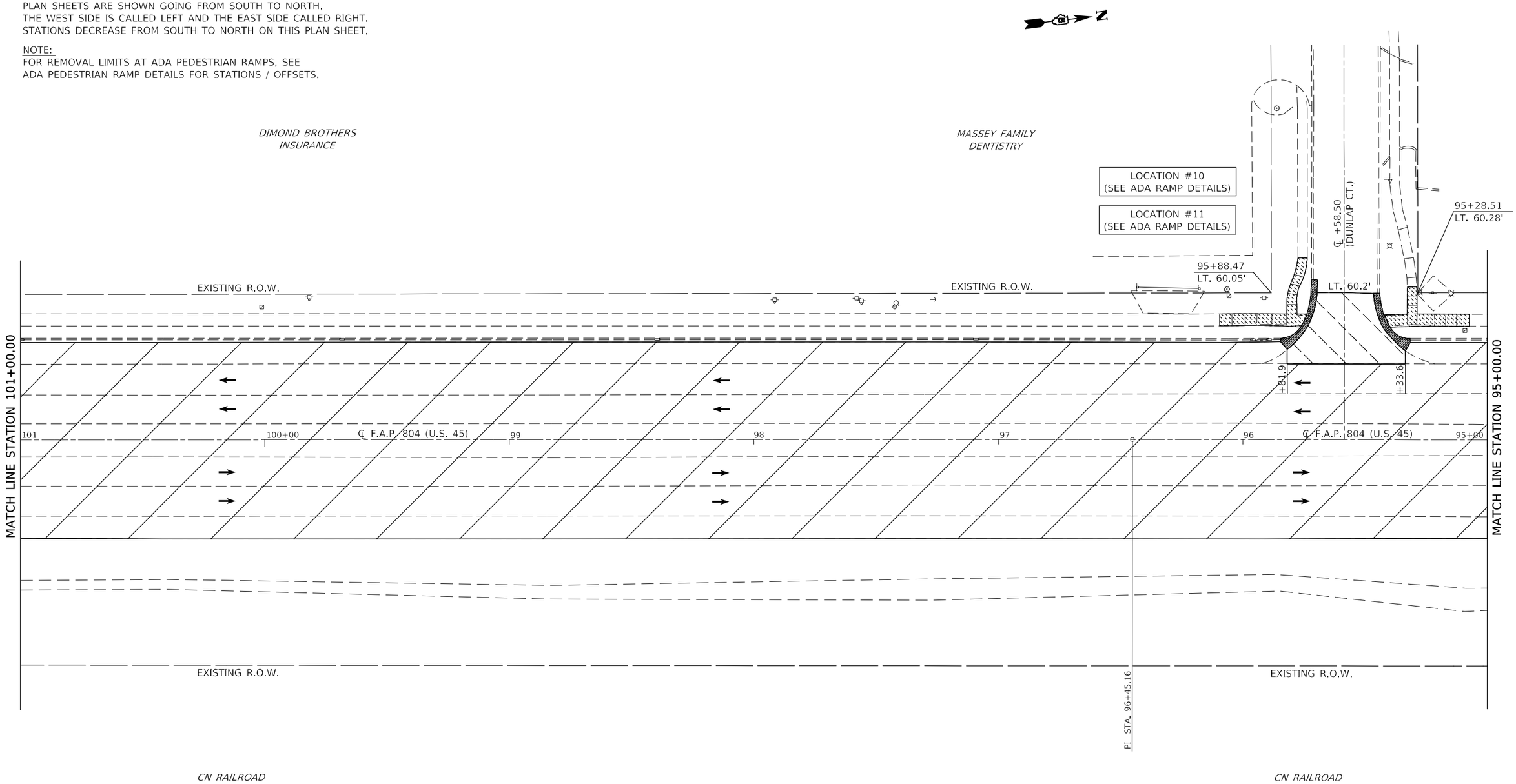

HOT-MIX ASPHALT SURFACE REMOVAL, 2-3/4"

HOT-MIX ASPHALT SURFACE REMOVAL (SPECIAL)

SIDEWALK REMOVAL

COMBINATION CURB AND GUTTER REMOVAL

SEC. 25, T.19N., R.8E., 3RD P.M.

MODEL: SMODELNAMES
FILE NAME: pw:\\ildot-pw.bentley.com:PWIDOT\Documents\IDOT Offices\District 5\Projects\D57099\CADData\CADsheets\D57099-Sht-Removal.dgn

USER NAME = Greg.Eaglin	DESIGNED -	REVISED -	
	DRAWN -	REVISED -	
PLOT SCALE = 40.0000 ' / in.	CHECKED -	REVISED -	
PLOT DATE = 6/26/2024	DATE -	REVISED -	

STATE OF ILLINOIS
DEPARTMENT OF TRANSPORTATION

REMOVAL PLAN SHEETS

SCALE: 1" = 20' | SHEET 7 OF 28 SHEETS | STA. 101+00.00 TO STA. 95+00.00

F.A.P. RTE.	SECTION	COUNTY	TOTAL SHEETS	SHEET NO.
804	25RS-6	CHAMPAIGN	306	90

CONTRACT NO. 70991

ILLINOIS | FED. AID PROJECT

SEC. 25, T.19N., R.8E., 3RD P.M.

NOTE:
PLAN SHEETS ARE SHOWN GOING FROM SOUTH TO NORTH.
THE WEST SIDE IS CALLED LEFT AND THE EAST SIDE CALLED RIGHT.
STATIONS DECREASE FROM SOUTH TO NORTH ON THIS PLAN SHEET.

NOTE:
FOR REMOVAL LIMITS AT ADA PEDESTRIAN RAMPS, SEE
ADA PEDESTRIAN RAMP DETAILS FOR STATIONS / OFFSETS.

HOT-MIX ASPHALT SURFACE REMOVAL, 2-3/4"

SIDEWALK REMOVAL

SEC. 25, T.19N., R.8E., 3RD P.M.

MODEL: $MODELNAME
FILE NAME: pw:\\ildot-pw.bentley.com:PWIDOT\Documents\IDOT Offices\District 5\Projects\D57099\CADData\CADsheets\D57099-I-Sht-Removal.dgn

USER NAME = Greg.Eaglin	DESIGNED -	REVISED -	
	DRAWN -	REVISED -	
PLOT SCALE = 40.0000 ' / in.	CHECKED -	REVISED -	
PLOT DATE = 6/26/2024	DATE -	REVISED -	

STATE OF ILLINOIS
DEPARTMENT OF TRANSPORTATION

REMOVAL PLAN SHEETS

SCALE: 1" = 20' | SHEET 8 OF 28 SHEETS | STA. 95+00.00 TO STA. 89+00.00

F.A.P. RTE.	SECTION	COUNTY	TOTAL SHEETS	SHEET NO.
804	25RS-6	CHAMPAIGN	306	91
		CONTRACT NO. 70991		
		ILLINOIS	FED. AID PROJECT	

NOTE:
PLAN SHEETS ARE SHOWN GOING FROM SOUTH TO NORTH.
THE WEST SIDE IS CALLED LEFT AND THE EAST SIDE CALLED RIGHT.
STATIONS DECREASE FROM SOUTH TO NORTH ON THIS PLAN SHEET.

NOTE:
FOR REMOVAL LIMITS AT ADA PEDESTRIAN RAMPS, SEE
ADA PEDESTRIAN RAMP DETAILS FOR STATIONS / OFFSETS.

SEC. 25, T.19N., R.8E., 3RD P.M.

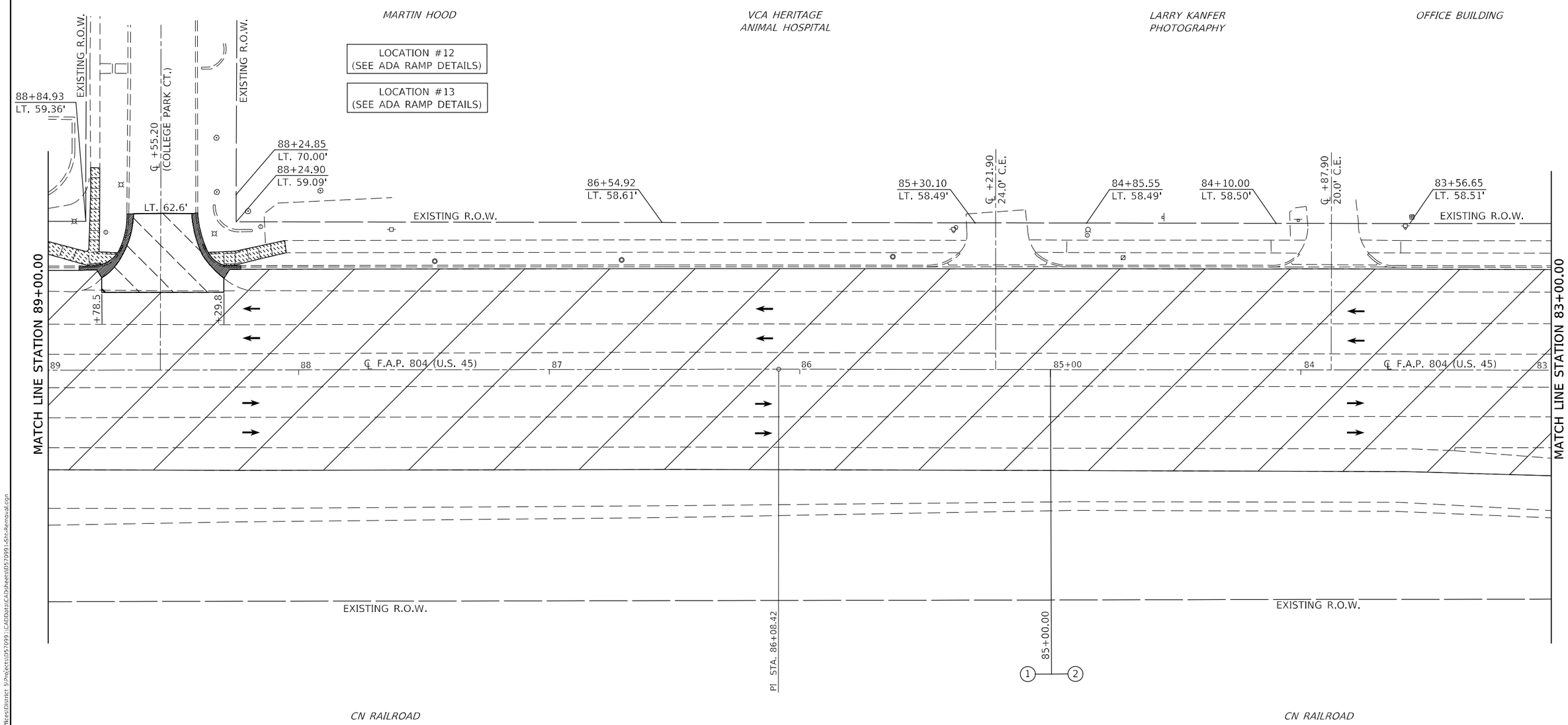

HOT-MIX ASPHALT SURFACE REMOVAL, 2-3/4"

HOT-MIX ASPHALT SURFACE REMOVAL (SPECIAL)

SIDEWALK REMOVAL

COMBINATION CURB AND GUTTER REMOVAL

SEC. 25, T.19N., R.8E., 3RD P.M.

MODEL: $MODEL NAMES
FILE NAME: pw:\\ildot-pw.bentley.com:PWIDOT\Documents\IDOT Offices\District 5\Projects\D57099\CADData\CADsheets\D570991-S9b-Removal.dgn

USER NAME = Greg.Eaglin	DESIGNED -	REVISED -	
	DRAWN -	REVISED -	
PLOT SCALE = 40.0000 ' / in.	CHECKED -	REVISED -	
PLOT DATE = 6/26/2024	DATE -	REVISED -	

STATE OF ILLINOIS
DEPARTMENT OF TRANSPORTATION

REMOVAL PLAN SHEETS

SCALE: 1" = 20' | SHEET 9 OF 28 SHEETS | STA. 89+00.00 TO STA. 83+00.00

F.A.P. RTE.	SECTION	COUNTY	TOTAL SHEETS	SHEET NO.
804	25RS-6	CHAMPAIGN	306	92
		CONTRACT NO. 70991		
		ILLINOIS FED. AID PROJECT		

NOTE:
PLAN SHEETS ARE SHOWN GOING FROM SOUTH TO NORTH.
THE WEST SIDE IS CALLED LEFT AND THE EAST SIDE CALLED RIGHT.
STATIONS DECREASE FROM SOUTH TO NORTH ON THIS PLAN SHEET.

NOTE:
FOR REMOVAL LIMITS AT ADA PEDESTRIAN RAMPS, SEE
ADA PEDESTRIAN RAMP DETAILS FOR STATIONS / OFFSETS.

NOTE:
SEE TRAFFIC SIGNAL PLAN SHEETS FOR REMOVAL ITEMS
ASSOCIATED WITH TRAFFIC SIGNAL MODERNIZATION

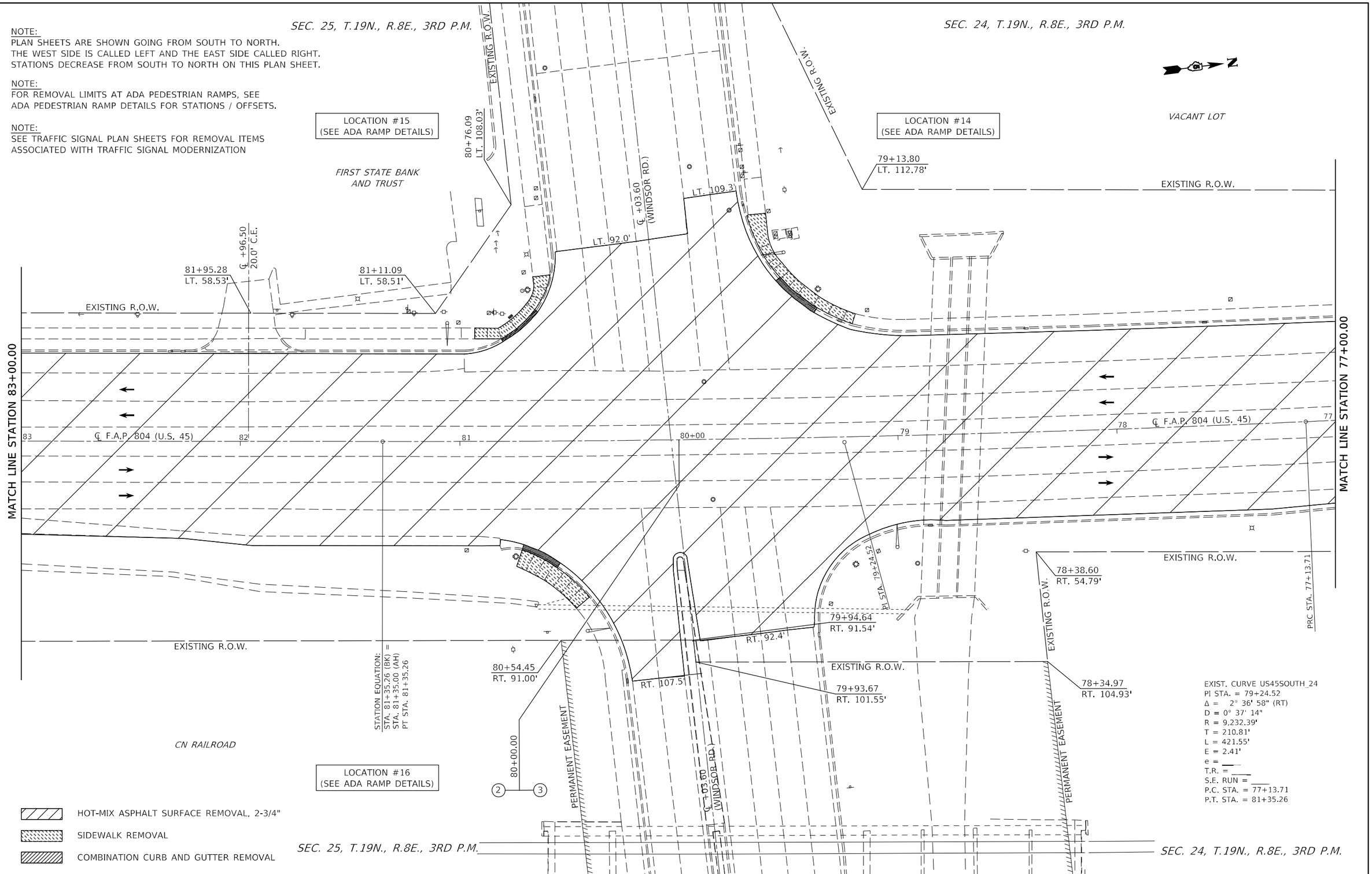

MODEL: $MODELNAME$
FILE NAME: pw:\\ildot-pw.bentley.com:PWIDOT\Documents\IDOT Offices\District 5\Projects\D57099 (CAD\Data\CAD\Sheets\D57099-L-Sht-Removal.dgn

USER NAME = Greg.Eaglin	DESIGNED -	REVISED -	
	DRAWN -	REVISED -	
PLOT SCALE = 40.0000 ' / in.	CHECKED -	REVISED -	
PLOT DATE = 6/26/2024	DATE -	REVISED -	

STATE OF ILLINOIS
DEPARTMENT OF TRANSPORTATION

REMOVAL PLAN SHEETS

SCALE: 1" = 20' | SHEET 10 OF 28 SHEETS | STA. 83+00.00 TO STA. 77+00.00

F.A.P. RTE.	SECTION	COUNTY	TOTAL SHEETS	SHEET NO.
804	25RS-6	CHAMPAIGN	306	93
		CONTRACT NO. 70991		
		ILLINOIS	FED. AID PROJECT	

SEC. 24, T.19N., R.8E., 3RD P.M.

NOTE:
PLAN SHEETS ARE SHOWN GOING FROM SOUTH TO NORTH.
THE WEST SIDE IS CALLED LEFT AND THE EAST SIDE CALLED RIGHT.
STATIONS DECREASE FROM SOUTH TO NORTH ON THIS PLAN SHEET.

NOTE:
FOR REMOVAL LIMITS AT ADA PEDESTRIAN RAMPS, SEE
ADA PEDESTRIAN RAMP DETAILS FOR STATIONS / OFFSETS.

NOTE:
SEE TRAFFIC SIGNAL PLAN SHEETS FOR REMOVAL ITEMS
ASSOCIATED WITH TRAFFIC SIGNAL MODERNIZATION

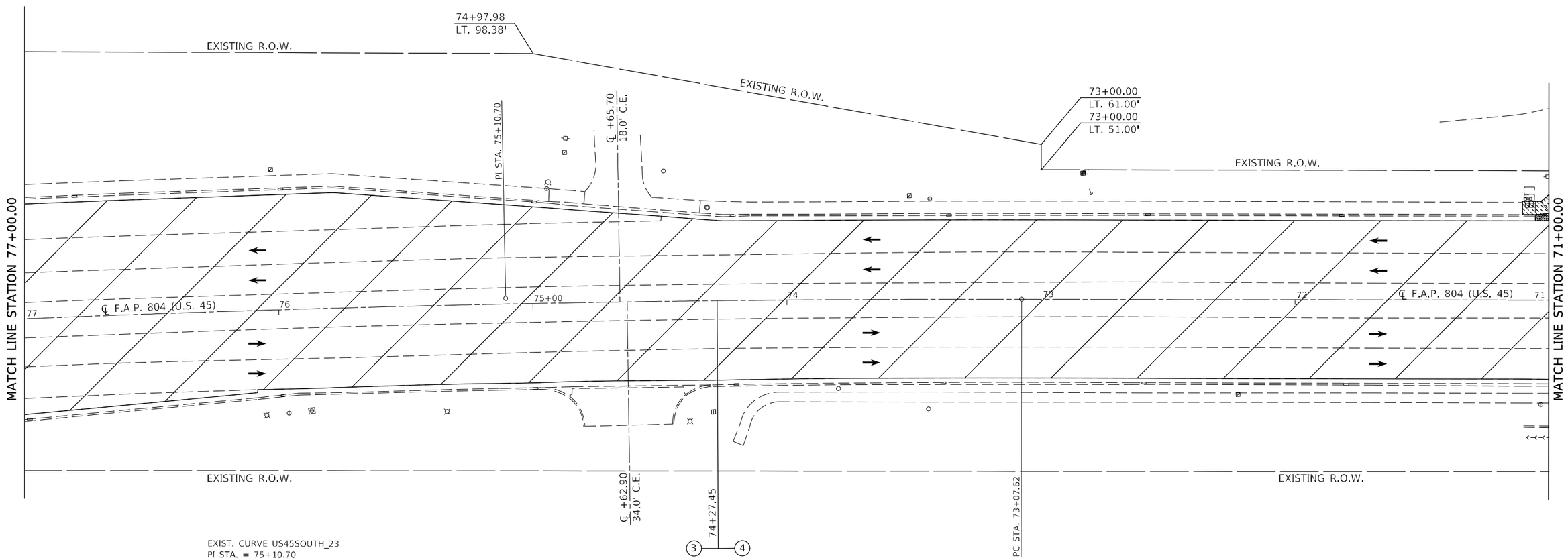

EXIST. CURVE US45SOUTH_23
PI STA. = 75+10.70
Δ = 2° 30' 32" (LT)
D = 0° 37' 04"
R = 9.273.88'
T = 203.08'
L = 406.10'
E = 2.22'
e = ___
T.R. = ____
S.E. RUN = ____
P.C. STA. = 73+07.62
P.T. STA. = 77+13.71

HOT-MIX ASPHALT SURFACE REMOVAL, 2-3/4"

SIDEWALK REMOVAL

COMBINATION CURB AND GUTTER REMOVAL

SEC. 24, T.19N., R.8E., 3RD P.M.

MODEL: $MODEL NAMES
FILE NAME: pw:\\ildot-pw.bentley.com:PWIDOT\Documents\IDOT Offices\District 5\Projects\D57099\CADData\CADsheets\D57099-SH-Removal.dgn

USER NAME = Greg.Eaglin	DESIGNED -	REVISED -	
	DRAWN -	REVISED -	
PLOT SCALE = 40.0000 ' / in.	CHECKED -	REVISED -	
PLOT DATE = 6/26/2024	DATE -	REVISED -	

STATE OF ILLINOIS
DEPARTMENT OF TRANSPORTATION

REMOVAL PLAN SHEETS

SCALE: 1" = 20' | SHEET 11 OF 28 SHEETS | STA. 77+00.00 TO STA. 71+00.00

F.A.P. RTE.	SECTION	COUNTY	TOTAL SHEETS	SHEET NO.
804	25RS-6	CHAMPAIGN	306	94
		CONTRACT NO. 70991		
		ILLINOIS FED. AID PROJECT		

SEC. 24, T.19N., R.8E., 3RD P.M.

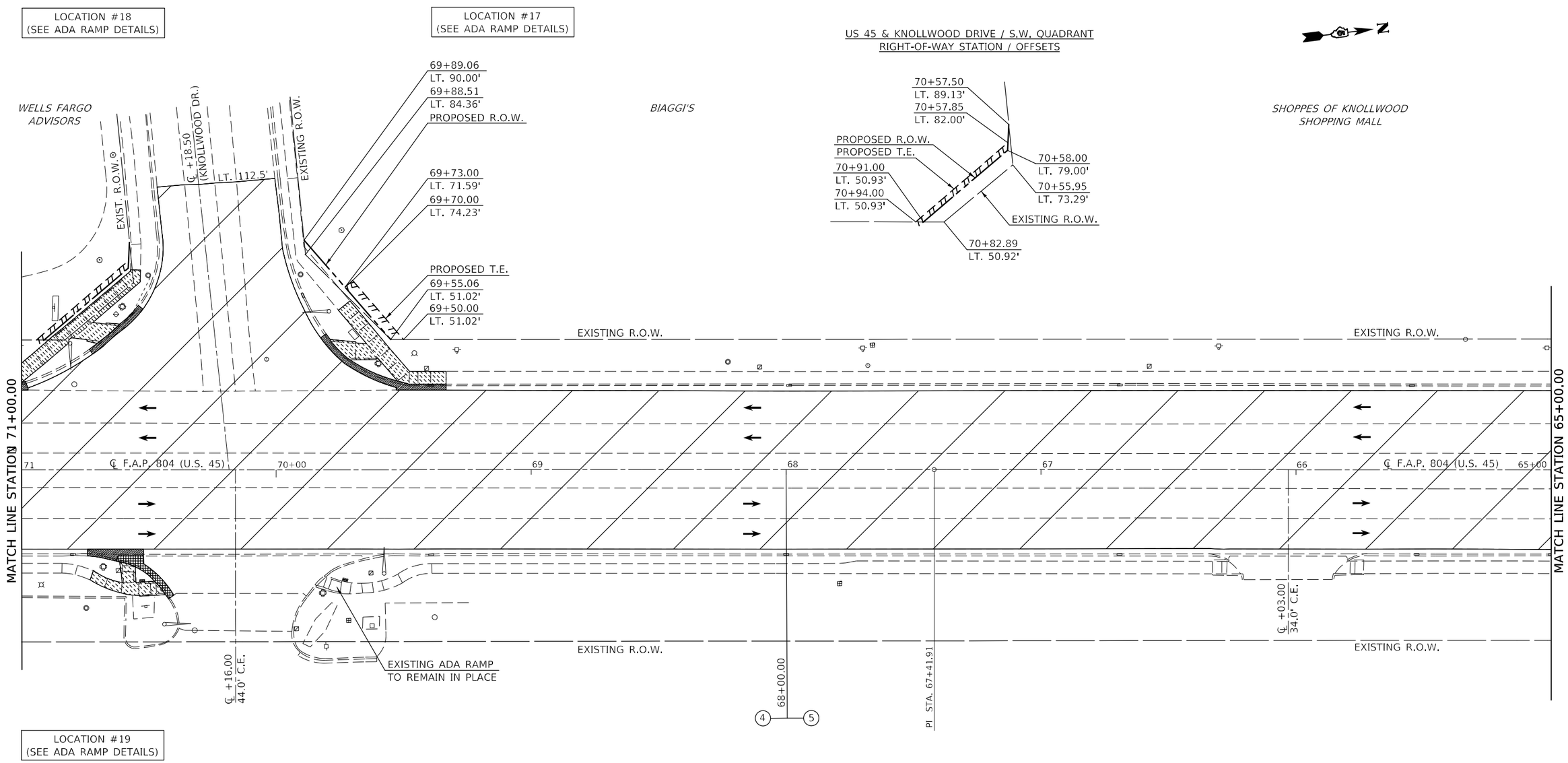

HOT-MIX ASPHALT SURFACE REMOVAL, 2-3/4"

SIDEWALK REMOVAL

COMBINATION CURB AND GUTTER REMOVAL

DRIVEWAY PAVEMENT REMOVAL

NOTE:
PLAN SHEETS ARE SHOWN GOING FROM SOUTH TO NORTH.
THE WEST SIDE IS CALLED LEFT AND THE EAST SIDE CALLED RIGHT.
STATIONS DECREASE FROM SOUTH TO NORTH ON THIS PLAN SHEET.

NOTE:
FOR REMOVAL LIMITS AT ADA PEDESTRIAN RAMPS, SEE
ADA PEDESTRIAN RAMP DETAILS FOR STATIONS / OFFSETS.

NOTE:
SEE TRAFFIC SIGNAL PLAN SHEETS FOR REMOVAL ITEMS
ASSOCIATED WITH TRAFFIC SIGNAL MODERNIZATION

SEC. 24, T.19N., R.8E., 3RD P.M.

MODEL: $MODELNAME$
FILE NAME: pw:\\ildot-pw.bentley.com:PWIDOT\Documents\IDOT Offices\District 5\Projects\D57099\CADData\CADsheets\D57099-Sht-Removal.dgn

USER NAME = Greg.Eaglin	DESIGNED -	REVISED -	
	DRAWN -	REVISED -	
PLOT SCALE = 40.0000 ' / in.	CHECKED -	REVISED -	
PLOT DATE = 6/26/2024	DATE -	REVISED -	

STATE OF ILLINOIS
DEPARTMENT OF TRANSPORTATION

REMOVAL PLAN SHEETS

SCALE: 1" = 20' | SHEET 12 OF 28 SHEETS | STA. 71+00.00 TO STA. 65+00.00

F.A.P. RTE.	SECTION	COUNTY	TOTAL SHEETS	SHEET NO.
804	25RS-6	CHAMPAIGN	306	95

CONTRACT NO. 70991

ILLINOIS | FED. AID PROJECT

SEC. 24, T.19N., R.8E., 3RD P.M.

NOTE:
PLAN SHEETS ARE SHOWN GOING FROM SOUTH TO NORTH.
THE WEST SIDE IS CALLED LEFT AND THE EAST SIDE CALLED RIGHT.
STATIONS DECREASE FROM SOUTH TO NORTH ON THIS PLAN SHEET.

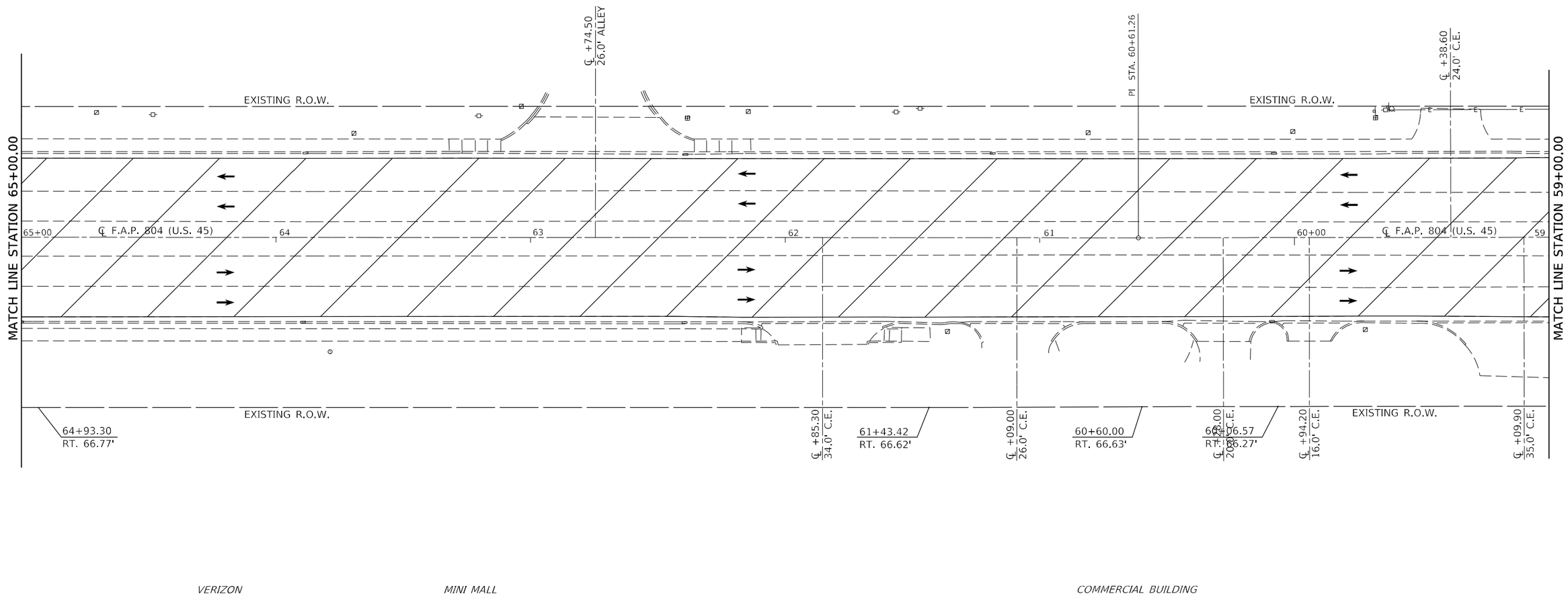

HOT-MIX ASPHALT SURFACE REMOVAL, 2-3/4"

SEC. 24, T.19N., R.8E., 3RD P.M.

MODEL: $MODELNAME$
FILE NAME: pw:\\ildot-pw.bentley.com:PWIDOT\Documents\IDOT Offices\Districts 5\Project\D570991\CADData\CADsheets\D570991-Sht-Removal.dgn

USER NAME = Greg.Eaglin	DESIGNED -	REVISED -	
	DRAWN -	REVISED -	
PLOT SCALE = 40.0000 ' / in.	CHECKED -	REVISED -	
PLOT DATE = 6/26/2024	DATE -	REVISED -	

STATE OF ILLINOIS
DEPARTMENT OF TRANSPORTATION

REMOVAL PLAN SHEETS

SCALE: 1" = 20' | SHEET 13 OF 28 SHEETS | STA. 65+00.00 TO STA. 59+00.00

F.A.P. RTE.	SECTION	COUNTY	TOTAL SHEETS	SHEET NO.
804	25RS-6	CHAMPAIGN	306	96

CONTRACT NO. 70991

ILLINOIS | FED. AID PROJECT

SEC. 24, T.19N., R.8E., 3RD P.M.

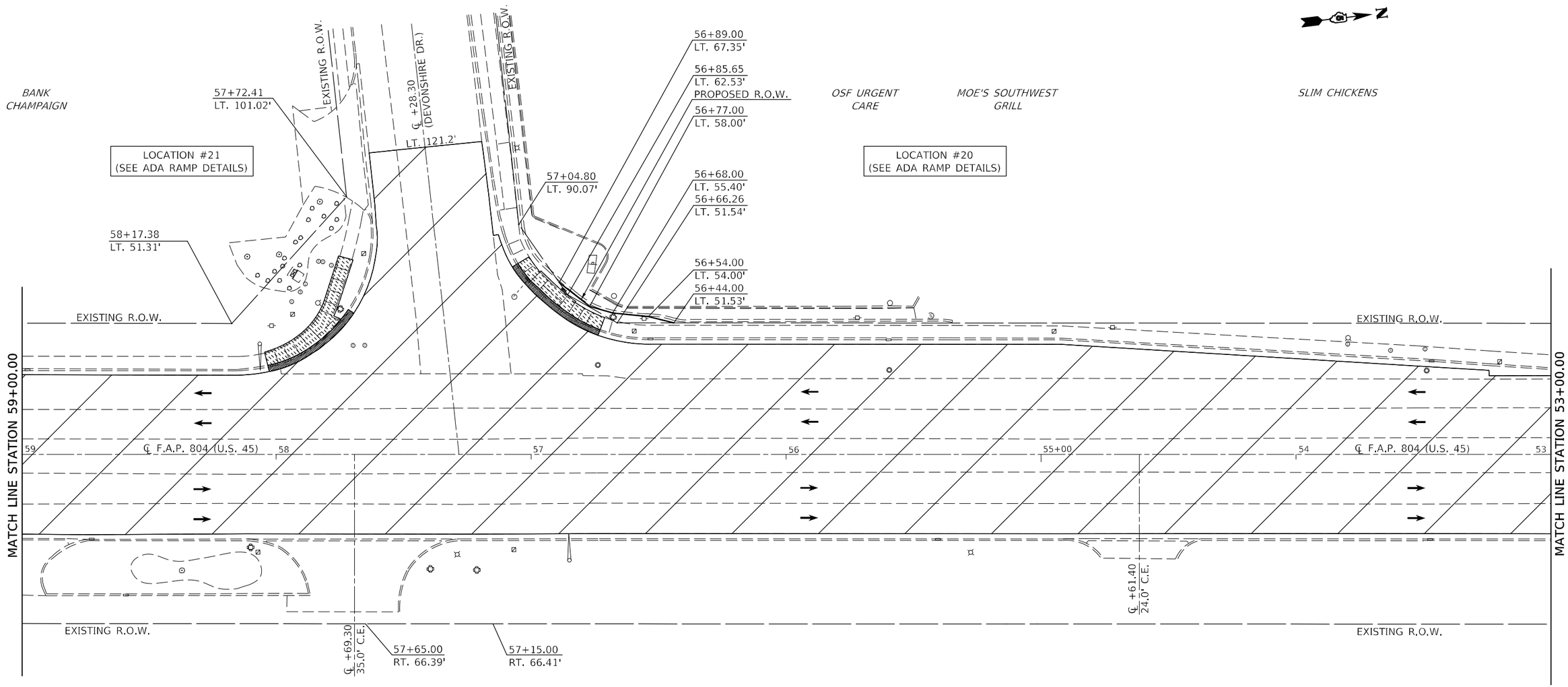

NOTE:
PLAN SHEETS ARE SHOWN GOING FROM SOUTH TO NORTH.
THE WEST SIDE IS CALLED LEFT AND THE EAST SIDE CALLED RIGHT.
STATIONS DECREASE FROM SOUTH TO NORTH ON THIS PLAN SHEET.

NOTE:
FOR REMOVAL LIMITS AT ADA PEDESTRIAN RAMPS, SEE
ADA PEDESTRIAN RAMP DETAILS FOR STATIONS / OFFSETS.

NOTE:
SEE TRAFFIC SIGNAL PLAN SHEETS FOR REMOVAL ITEMS
ASSOCIATED WITH TRAFFIC SIGNAL MODERNIZATION

HOT-MIX ASPHALT SURFACE REMOVAL, 2-3/4"

SIDEWALK REMOVAL

COMBINATION CURB AND GUTTER REMOVAL

SEC. 24, T.19N., R.8E., 3RD P.M.

MODEL: $MODELNAME$
FILE NAME: pw:\\ildot-pw.bentley.com:PWIDOT\Documents\IDOT Offices\District 5\Projects\D57099\CADData\CADsheets\D57099-I-Sht-Removal.dgn

USER NAME = Greg.Eaglin	DESIGNED -	REVISED -	
	DRAWN -	REVISED -	
PLOT SCALE = 40.0000 ' / in.	CHECKED -	REVISED -	
PLOT DATE = 6/26/2024	DATE -	REVISED -	

STATE OF ILLINOIS
DEPARTMENT OF TRANSPORTATION

REMOVAL PLAN SHEETS

SCALE: 1" = 20' | SHEET 14 OF 28 SHEETS | STA. 59+00.00 TO STA. 53+00.00

F.A.P. RTE.	SECTION	COUNTY	TOTAL SHEETS	SHEET NO.
804	25RS-6	CHAMPAIGN	306	97
		CONTRACT NO. 70991		
		ILLINOIS FED. AID PROJECT		

NOTE:
PLAN SHEETS ARE SHOWN GOING FROM SOUTH TO NORTH.
THE WEST SIDE IS CALLED LEFT AND THE EAST SIDE CALLED RIGHT.
STATIONS DECREASE FROM SOUTH TO NORTH ON THIS PLAN SHEET.

SEC. 24, T.19N., R.8E., 3RD P.M.

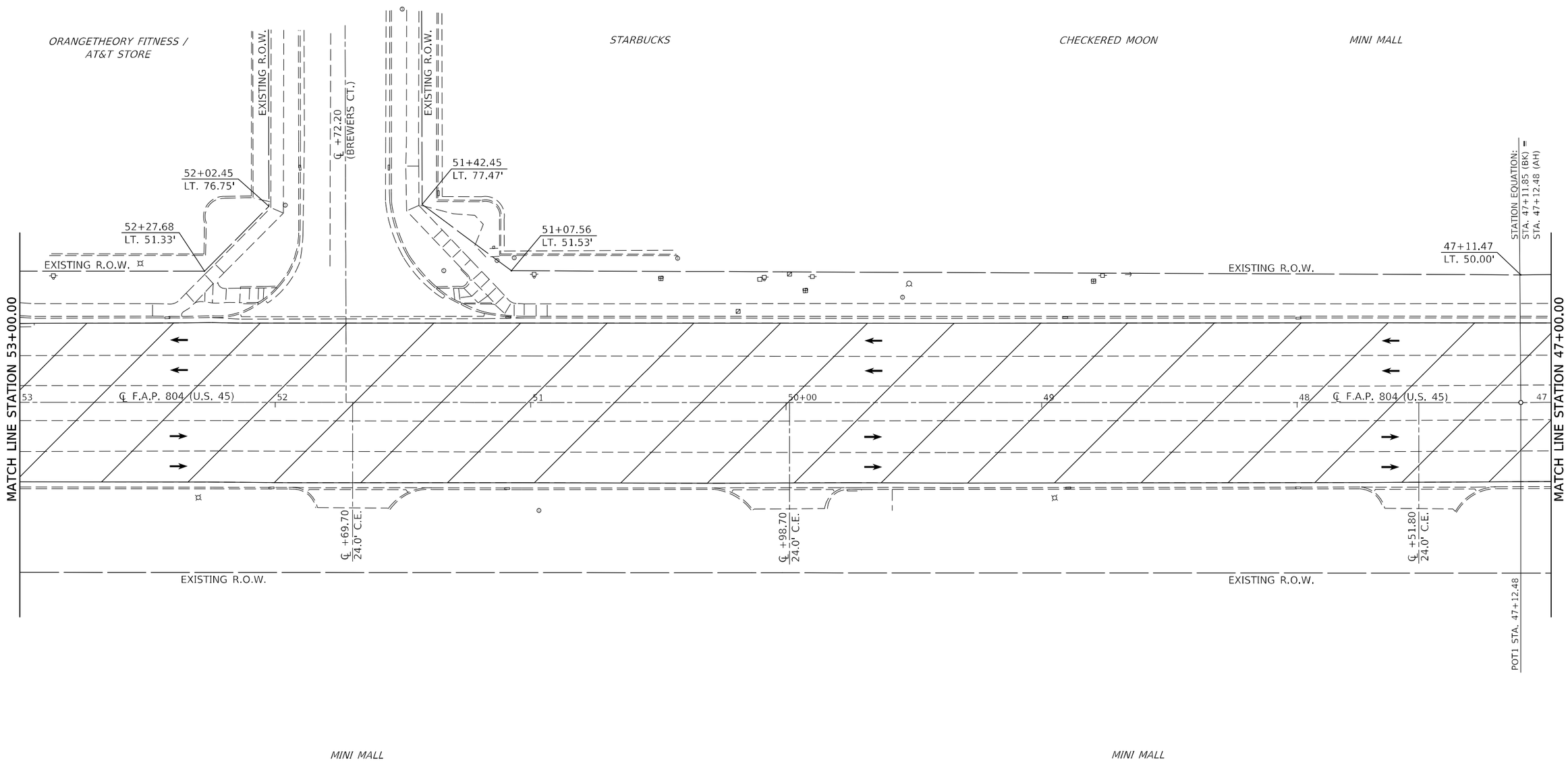

HOT-MIX ASPHALT SURFACE REMOVAL, 2-3/4"

SEC. 24, T.19N., R.8E., 3RD P.M.

MODEL: $MODELNAME$
FILE NAME: pw:\\ildot-pw.bentley.com:PWIDOT\Documents\IDOT Offices\District 5\Projects\D57099\CADData\CADsheets\D57099-Sht-Removal.dgn

USER NAME = Greg.Eaglin	DESIGNED -	REVISED -	
	DRAWN -	REVISED -	
PLOT SCALE = 40.0000 ' / in.	CHECKED -	REVISED -	
PLOT DATE = 6/26/2024	DATE -	REVISED -	

STATE OF ILLINOIS
DEPARTMENT OF TRANSPORTATION

REMOVAL PLAN SHEETS

SCALE: 1" = 20' | SHEET 15 OF 28 SHEETS | STA. 53+00.00 TO STA. 47+00.00

F.A.P. RTE.	SECTION	COUNTY	TOTAL SHEETS	SHEET NO.
804	25RS-6	CHAMPAIGN	306	98
		CONTRACT NO. 70991		
		ILLINOIS	FED. AID PROJECT	

NOTE:
PLAN SHEETS ARE SHOWN GOING FROM SOUTH TO NORTH.
THE WEST SIDE IS CALLED LEFT AND THE EAST SIDE CALLED RIGHT.
STATIONS DECREASE FROM SOUTH TO NORTH ON THIS PLAN SHEET.

NOTE:
FOR REMOVAL LIMITS AT ADA PEDESTRIAN RAMPS, SEE
ADA PEDESTRIAN RAMP DETAILS FOR STATIONS / OFFSETS.

SEC. 24, T.19N., R.8E., 3RD P.M.

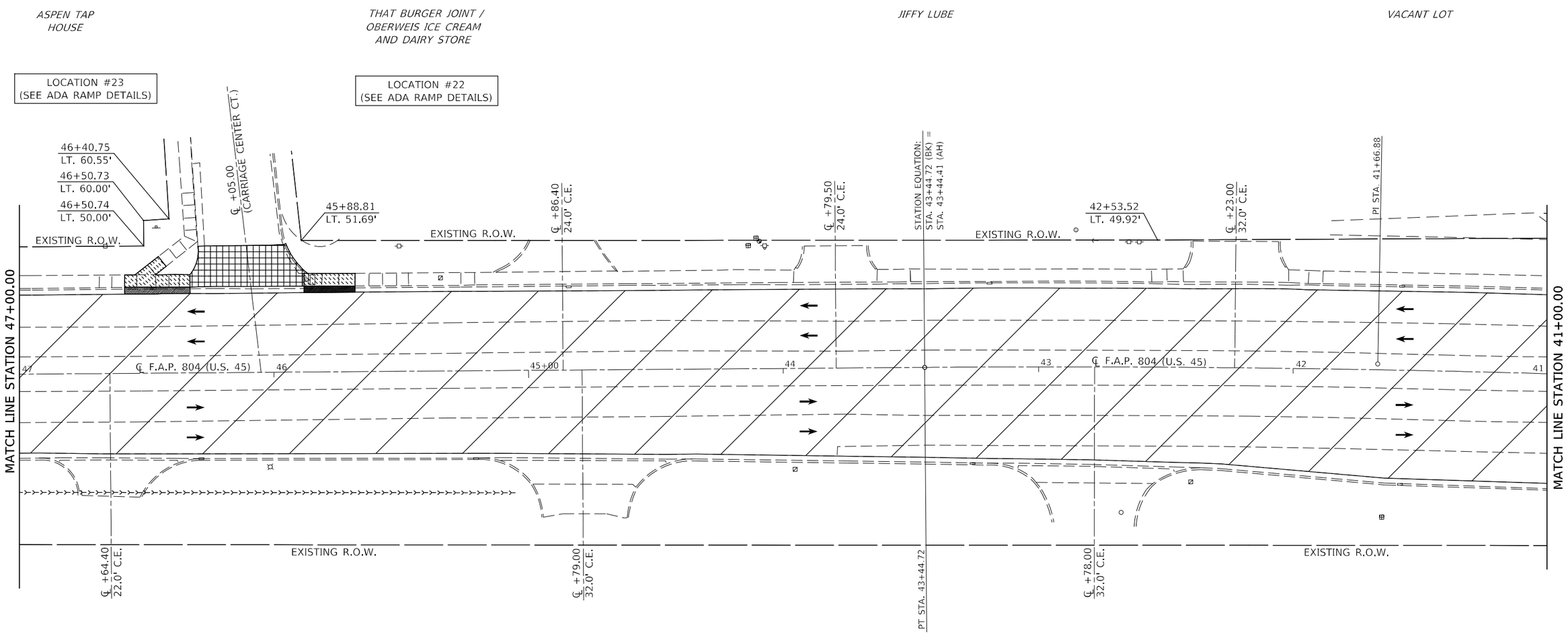

EXIST. CURVE US45SOUTH_12
PI STA. = 41+66.88
Δ = 2° 56' 18" (LT)
D = 0° 49' 33"
R = 6,937.29'
T = 177.92'
L = 355.76'
E = 2.28'
e = ____
T.R. = ____
S.E. RUN = ____
P.C. STA. = 39+88.96
P.T. STA. = 43+44.72

HOT-MIX ASPHALT SURFACE REMOVAL, 2-3/4"

SIDEWALK REMOVAL

COMBINATION CURB AND GUTTER REMOVAL

DRIVEWAY PAVEMENT REMOVAL

SEC. 24, T.19N., R.8E., 3RD P.M.

MODEL: $MODEL$NAME$
FILE NAME: pw:\\ildot-pw.bentley.com:PWIDOT\Documents\IDOT Offices\District 5\Projects\D570991 \CADData\CADsheets\D570991-Sht-Removal.dgn

USER NAME = Greg.Eaglin	DESIGNED -	REVISED -	
	DRAWN -	REVISED -	
PLOT SCALE = 40.0000 ' / in.	CHECKED -	REVISED -	
PLOT DATE = 6/26/2024	DATE -	REVISED -	

STATE OF ILLINOIS
DEPARTMENT OF TRANSPORTATION

REMOVAL PLAN SHEETS

SCALE: 1" = 20' | SHEET 16 OF 28 SHEETS | STA. 47+00.00 TO STA. 41+00.00

F.A.P. RTE.	SECTION	COUNTY	TOTAL SHEETS	SHEET NO.
804	25RS-6	CHAMPAIGN	306	99
		CONTRACT NO. 70991		
		ILLINOIS	FED. AID PROJECT	

NOTE:
FOR REMOVAL LIMITS AT ADA PEDESTRIAN RAMPS, SEE ADA PEDESTRIAN RAMP DETAILS FOR STATIONS / OFFSETS.

NOTE:
SEE TRAFFIC SIGNAL PLAN SHEETS FOR REMOVAL ITEMS ASSOCIATED WITH TRAFFIC SIGNAL MODERNIZATION

SEC. 24, T.19N., R.8E., 3RD P.M.

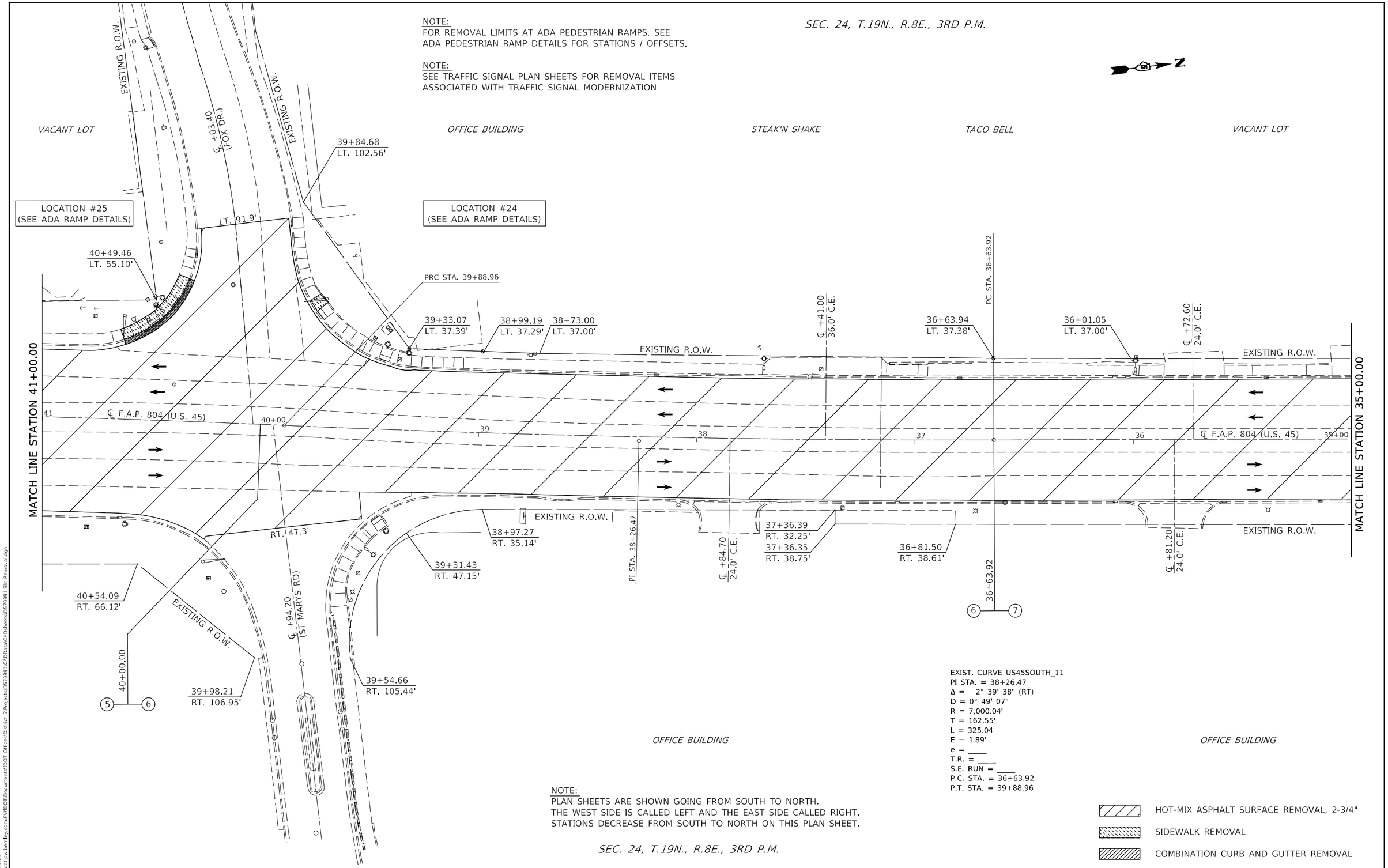

EXIST. CURVE US45SOUTH_11
PI STA. = 38+26.47
Δ = 2° 39' 38" (RT)
D = 0° 49' 07"
R = 7,000.04'
T = 162.55'
L = 325.04'
E = 1.89'
e = ____
T.R. = ____
S.E. RUN = ____
P.C. STA. = 36+63.92
P.T. STA. = 39+88.96

NOTE:
PLAN SHEETS ARE SHOWN GOING FROM SOUTH TO NORTH.
THE WEST SIDE IS CALLED LEFT AND THE EAST SIDE CALLED RIGHT.
STATIONS DECREASE FROM SOUTH TO NORTH ON THIS PLAN SHEET.

SEC. 24, T.19N., R.8E., 3RD P.M.

HOT-MIX ASPHALT SURFACE REMOVAL, 2-3/4"
SIDEWALK REMOVAL
COMBINATION CURB AND GUTTER REMOVAL

MODEL: $MODEL$NAMES
FILE NAME: pw:\\ildot-pw.bentley.com:PWIDOT\Documents\IDOT Offices\District 5\Projects\D570991\CADData\CADsheets\D570991-Sht-Removal.dgn

USER NAME = Greg.Eaglin	DESIGNED -	REVISED -	
	DRAWN -	REVISED -	
PLOT SCALE = 40.0000 ' / in.	CHECKED -	REVISED -	
PLOT DATE = 6/26/2024	DATE -	REVISED -	

STATE OF ILLINOIS
DEPARTMENT OF TRANSPORTATION

REMOVAL PLAN SHEETS

SCALE: 1" = 20' | SHEET 17 OF 28 SHEETS | STA. 41+00.00 TO STA. 35+00.00

F.A.P. RTE.	SECTION	COUNTY	TOTAL SHEETS	SHEET NO.
804	25RS-6	CHAMPAIGN	306	100
		CONTRACT NO. 70991		
		ILLINOIS	FED. AID PROJECT	