04-25-2025 LETTING ITEM 062

F.A. RTE.	SECTION	COUNTY	TOTAL SHEETS	SHEET NO.
646	122V-BR1	BUREAU	69	1
	ILLINOIS	CONTRACT NO. 66M48		

FOR INDEX OF SHEETS, SEE SHEET NO. 2

STATE OF ILLINOIS
DEPARTMENT OF TRANSPORTATION

D-93-067-24
P-93-021-22

PROPOSED HIGHWAY PLANS

FAP 646 (IL 40)
SECTION 122V-BR1
PROJECT BR-AJ0R(455)
DECK REPLACEMENT (SN 006-0138)
CARRYING IL 40 OVER BNSF RAILWAY
BUREAU COUNTY
C-93-105-24

DESIGN DESIGNATION
IL ROUTE 40 = MINOR ARTERIAL

TRAFFIC DATA
IL ROUTE 40 = 1,250 (2021)
MU = 18% SU = 7.2% PV = 74.8%

POSTED SPEED LIMIT
IL ROUTE 40 = 40 / 55 MPH

DESIGN SPEED LIMIT
IL ROUTE 40 = 40 / 55 MPH

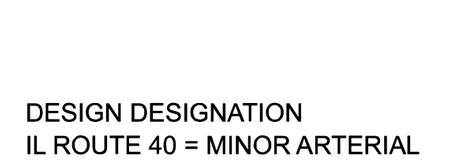

FULL SIZE PLANS HAVE BEEN PREPARED USING STANDARD ENGINEERING SCALES. REDUCED SIZED PLANS WILL NOT CONFORM TO STANDARD SCALES. IN MAKING MEASUREMENTS ON REDUCED PLANS, THE ABOVE SCALES MAY BE USED.

J.U.L.I.E.
JOINT UTILITY LOCATION INFORMATION FOR EXCAVATION
1-800-892-0123
OR 811

R 7 E

T 16 N

BEGIN IMPROVEMENT
STA. 161+00

END IMPROVEMENT
STA. 168+40

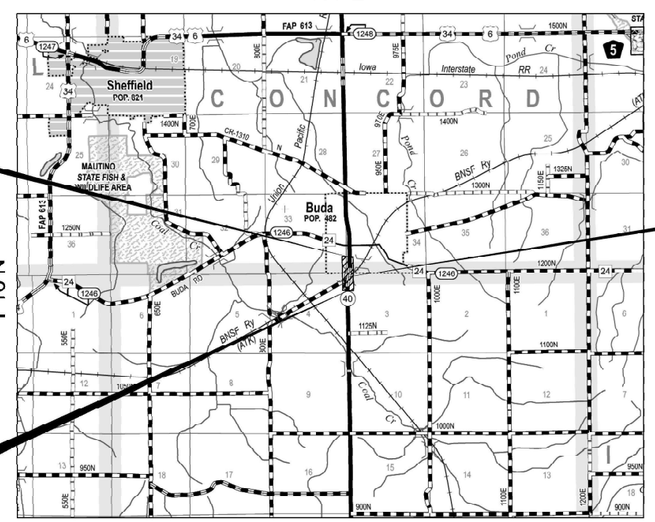

IL 40 OVER BNSF
STA. 165+04.56
SN 006-0138

LOCATION MAP
N.T.S.

GROSS LENGTH = 740 FT. = 0.140 MILE
NET LENGTH = 740 FT. = 0.140 MILE

LOCATION OF SECTION INDICATED THUS: -

SINGH
SINGH + ASSOCIATES, INC.
CONSULTING ENGINEERS

STATE OF ILLINOIS
DEPARTMENT OF TRANSPORTATION

SUBMITTED February 5, 2025
Trisha Thompson
mas **REGIONAL ENGINEER**

March 21, 2025
ENGINEER OF DESIGN AND ENVIRONMENT

March 21, 2025
DIRECTOR OF HIGHWAYS, PROJECT IMPLEMENTATION

LICENSED PROFESSIONAL ENGINEER
JILLYN K. O'SHEA
062-054974
STATE OF ILLINOIS

Jillyn K. O'Shea

SHEETS 1-18 AND 45-69
DATE: 1/16/2025
EXPIRES: 11/30/2026

PROJECT ENGINEER: DAVE ALEXANDER, PE
UNIT CHIEF: DARCY MITCHELL
DISTRICT 3 NO. (815) 434-6131
CONTRACT NO. 66M48

PRINTED BY THE AUTHORITY OF THE STATE OF ILLINOIS

REV. 2/18/25

INDEX OF SHEETS

HIGHWAY STANDARD DETAILS

000001-08	STANDARD SYMBOLS, ABBREVIATIONS AND PATTERNS
001006	DECIMAL OF AN INCH AND OF A FOOT
420401-13	PAVEMENT CONNECTOR (PCC) FOR BRIDGE APPROACH SLAB
515001-04	NAME PLATE FOR BRIDGES
542401-04	METAL FLARED END SECTION FOR PIPE CULVERTS
630001-13	STEEL PLATE BEAM GUARDRAIL
630201-07	PCC/HMA STABILIZATION AT STEEL PLATTE BEAM GUARDRAIL
630301-09	SHOULDER WIDENING FOR TYPE 1 (SPECIAL) GUARDRAIL TERMINALS
631031-18	TRAFFIC BARRIER TERMINAL, TYPE 6
701001-02	OFF-ROAD OPERATIONS, 2L, 2W, MORE THAN 15' (4.5 M) AWAY
701006-05	OFF ROAD OPERATIONS, 2L, 2W, 15' (4.5 M) TO 24" (600 MM) FROM PAVEMENT EDGE
701201-05	LANE CLOSURE, 2L, 2W, DAY ONLY, FOR SPEEDS ≥ 45 MPH
701311-03	LANE CLOSURE, 2L, 2W, MOVING OPERATIONS -DAY ONLY
701901-10	TRAFFIC CONTROL DEVICES
720001-01	SIGN PANEL MOUNTING DETAILS
720006-04	SIGN PANEL ERECTION DETAILS
725001-01	OBJECT AND TERMINAL MARKERS
728001-01	TELESCOPING STEEL SIGN SUPPORT
780001-05	TYPICAL PAVEMENT MARKINGS
781001-04	TYPICAL APPLICATIONS RAISED REFLECTIVE PAVEMENT MARKERS
782006-01	GUARDRAIL AND BARRIER WALL REFLECTOR MOUNTING DETAILS
B.L.R. 21-9	TYPICAL APPLICATION OF TRAFFIC CONTROL DEVICES FOR CONSTRUCTION ON RURAL LOCAL HIGHWAYS

DISTRICT 3 STANDARD DETAILS

406-8	HMA BUTT JOINT SAW CUT DETAIL
720-8	TEMPORARY INFORMATION SIGNING - ROAD WORK AHEAD EXPECT DELAYS
720-9	TEMPORARY INFORMATION SIGNING - ROAD DETOUR AHEAD
720-10	TEMPORARY INFORMATION SIGNING - ROAD CLOSED
780-8	PAVEMENT MARKING - TWO LANE ROADWAY
782-4	BARRIER WALL MARKER
782-5	LINEAR DELINEATOR APPLICATION FOR GUARDRAIL

HMA MIXTURE TABLE

LOCATIONS:	ENTIRE PROJECT	ENTIRE PROJECT
MIXTURE USE(S):	HMA	HMA DRIVEWAY
	SURFACE	BINDER
BINDER GRADE (PG):	PG 64-22	PG 64-22
DESIGN AIR VOIDS:	4.0% @ N50	4.0% @ N50
MIXTURE COMPOSITION: (MIXTURE GRADATION)	IL 9.5	IL 19.0
FRICTION AGGREGATE:	MIXTURE C	
MIXTURE WEIGHT:	112.0 LB/SY/IN	112.0 LB/SY/IN
QUALITY MANAGEMENT PROGRAM:	QCQA	QCQA
SUBLOT SIZE:	N/A	N/A
DENSITY TEST METHOD:	CORES/NUCLEAR	SATISFACTION OF ENGINEER
MATERIAL TRANSFER DEVICE (REQUIRED):	NO	NO

GENERAL NOTES

1. THE HMA SURFACE OF ALL MAILBOX TURNOUTS, PRIVATE ENTRANCES, COMMERCIAL ENTRANCES, AND SIDE ROADS SHALL BE MADE NEATLY, IN A WORKMANLIKE MANNER, AND SHALL ACCURATELY CONFORM TO THE SHAPES AND DIMENSIONS SHOWN ON THE PLAN DETAILS. IF REQUIRED BY THE ENGINEER, THE CONTRACTOR SHALL BE REQUIRED TO SAW CUT THE HMA SURFACE TO CONFORM TO THE SHAPES AND DIMENSIONS SHOWN ON THE PLAN DETAILS. THIS WORK SHALL BE INCLUDED IN THE COST OF THE HMA SURFACE.
2. EXCEPT AS NOTED ON THE PLANS, PAVEMENT GRADES SHOWN ARE AT THE TOP OF PAVEMENT SURFACES.
3. BEFORE ORDERING PIPE CULVERTS OR PIPE DRAINS, THE CONTRACTOR SHALL CONSULT THE ENGINEER FOR EXACT LENGTHS.
4. THE ENGINEER WILL BE THE SOLE JUDGE CONCERNING CURING TIME FOR THE VARIOUS HMA LIFTS.
5. ON EXISTING PAVEMENT WHICH MAY BE SUPERELEVATED, THE NEW HMA PAVEMENT SHALL BE BUILT WITH THE SAME SUPERELEVATION UNLESS NEW SUPERELEVATION RATES ARE GIVEN ON THE PLANS.
6. ALL HARDWARE (NUTS, BOLTS, WASHERS, STAPLES, WIRES, TIES, ETC.) REQUIRED FOR THE INSTALLATION OF GUARDRAIL SHALL BE CONSIDERED INCLUDED IN THE VARIOUS PAY ITEMS OF WORK IN THIS CONTRACT.
7. ALL ELEVATIONS REFERRING TO U.S.G.S. MEAN SEA LEVEL DATUM.
8. MEMBERS OF JULIE KNOWN TO BE WITHIN THE LIMITS OF THE IMPROVEMENT ARE: AMEREN; VILLAGE OF BUDA; CORNBELT ENERGY; MEDIACOM; FRONTIER.
9. THE FOLLOWING RATES OF APPLICATION HAVE BEEN USED IN CALCULATING PLAN QUANTITIES:

HMA RESURFACING	112	LBS/SQ YD/IN
TACK COAT	0.05	LBS/SQ FT
NUTRIENTS	90	LBS/AC

COMMITMENTS

1. THE IDOT RESIDENT SHALL CONTACT JUNIOR SENAT, THE DISTRICT 3 TRAFFIC SECTION, AT 815-434-6131 PRIOR TO THE INSTALLATION OF DETOUR SIGNAGE.
2. THE IDOT RESIDENT SHALL COORDINATE WITH MIKE KUEHN, STUDIES AND PLANS ENGINEER AT 815-284-5503, DISTRICT 2 AND KARAN DVORSKY, PROGRAM DEVELOPMENT ENGINEER AT 309-671-3490, DISTRICT 4 AS USING THEIR ROUTES FOR DETOUR. THE IDOT RESIDENT SHALL ALSO CONTACT THE DISTRICTS 2 AND 4 TRAFFIC SECTIONS PRIOR TO THE INSTALLATION OF DETOUR SIGNS IN THEIR DISTRICTS. D3 - AMANDA SRAMEK, 815-434-6131
3. THE IDOT RESIDENT SHALL CONTACT THE BUREAU COUNTY EMERGENCY SERVICE, THE LOCAL SCHOOL SYSTEM, AND THE LOCAL POST OFFICE A MINIMUM OF 72 HOURS PRIOR TO THE CLOSURE OF IL 40 TO THRU TRAFFIC.

NAME	TITLE	PHONE NUMBER
ADAM LIND	EMA COUNTY COORDINATOR	815-875-2077
JASON STABLER	SUPERINTENDENT BUREAU VALLEY CUSD #340	815-445-3101
POSTMASTER	USPS	309-895-6381

4. TREE REMOVAL ACTIVITIES WILL BE LIMITED TO THE PERIOD BETWEEN OCTOBER 1ST AND MARCH 31ST. TREES AND STUMPS WITH A DIAMETER GREATER THAN SIX INCHES SHALL BE PAID FOR AS TREE REMOVAL (6-15 UNITS DIAMETER). ALL OTHER BUSHES, SHRUBS, OR VEGETATION SUMPS WITH A DIAMETER LESS THAN SIX INCHES SHALL BE CONSIDERED CLEARING.
5. THE EXISTING SIGNS TO BE REMOVED SHALL BE RETURNED TO IDOT AFTER THE PROPOSED SIGNS HAVE BEEN REPLACED.

STATE OF ILLINOIS
DEPARTMENT OF TRANSPORTATION
DISTRICT THREE
AS BUILT INFORMATION

SUPERVISING CONSTRUCTION FIELD ENGINEER

RESIDENT ENGINEER / TECHNICIAN

START & END DATES OF CONSTRUCTION:

INSPECTORS:

CODE NO.	ITEM	UNIT	TOTAL QUANTITY	CONSTR. CODE 80% FED 20% STATE BRIDGE 0013 006-0138
20100110	TREE REMOVAL (6 TO 15 UNITS DIAMETER)	UNIT	17	17
20101100	TREE TRUNK PROTECTION	EACH	9	9
20200100	EARTH EXCAVATION	CU YD	15	15
20400800	FURNISHED EXCAVATION	CU YD	1095	1095
21101505	TOPSOIL EXCAVATION AND PLACEMENT	CU YD	152	152
25000210	SEEDING, CLASS 2A	ACRE	0.5	0.5
25000400	NITROGEN FERTILIZER NUTRIENT	POUND	44	44
25000500	PHOSPHORUS FERTILIZER NUTRIENT	POUND	44	44
25000600	POTASSIUM FERTILIZER NUTRIENT	POUND	44	44
25100630	EROSION CONTROL BLANKET	SQ YD	2163	2163
28000400	PERIMETER EROSION BARRIER	FOOT	1579	1579
28000500	INLET AND PIPE PROTECTION	EACH	9	9
28100705	STONE DUMPED RIPRAP, CLASS A3	SQ YD	52	52
28200200	FILTER FABRIC	SQ YD	52	52
35102000	AGGREGATE BASE COURSE, TYPE B 8"	SQ YD	407	407

*SPECIALTY ITEMS

MODEL: Bdr-SOQ
FILE NAME: J:\22209.05\04_CADD\CADD_Drawings\D366M48-Borders.dgn

SINGH
SINGH + ASSOCIATES, INC.
CONSULTING ENGINEERS

USER NAME =	DESIGNED - LM	REVISED -	
	DRAWN - LM	REVISED -	
	CHECKED - JO	REVISED -	
PLOT DATE =	DATE - 01/06/2025	REVISED -	

STATE OF ILLINOIS
DEPARTMENT OF TRANSPORTATION

SUMMARY OF QUANTITIES

SCALE: 1"=50' | SHEET 1 OF 6 SHEETS | STA. TO STA.

F.A.P RTE.	SECTION	COUNTY	TOTAL SHEETS	SHEET NO.
646	122V-BR1	BUREAU	69	3
		CONTRACT NO. 66M48		
		ILLINOIS	FED. AID PROJECT	

REV. 2/18/25

CODE NO.	ITEM	UNIT	TOTAL QUANTITY	CONSTR. CODE 80% FED 20% STATE BRIDGE 0013 006-0138
40600290	BITUMINOUS MATERIALS (TACK COAT)	POUND	815	815
40600370	LONGITUDINAL JOINT SEALANT	FOOT	381	381
40603080	HOT-MIX ASPHALT BINDER COURSE, IL-19.0, N50	TON	57	57
40604050	HOT-MIX ASPHALT SURFACE COURSE, IL-9.5, MIX "C", N50	TON	309	309
42000060	WELDED WIRE REINFORCEMENT	SQ YD	225	225
42000080	PAVEMENT CONNECTOR (PCC) FOR BRIDGE APPROACH SLAB	SQ YD	221	221
44000155	HOT-MIX ASPHALT SURFACE REMOVAL, 1 1/2"	SQ YD	1403	1403
44000200	DRIVEWAY PAVEMENT REMOVAL	SQ YD	118	118
50102400	CONCRETE REMOVAL	CU YD	39.2	39.2
50104650	SLOPE WALL REMOVAL	SQ YD	4	4
50104701	REMOVAL OF EXISTING CONCRETE DECK NO. 1	EACH	1	1
50105220	PIPE CULVERT REMOVAL	FOOT	32	32
50157300	PROTECTIVE SHIELD	SQ YD	336	336
50200100	STRUCTURE EXCAVATION	CU YD	227	227
50300225	CONCRETE STRUCTURES	CU YD	46.9	46.9

*SPECIALTY ITEMS

CODE NO.	ITEM	UNIT	TOTAL QUANTITY	CONSTR. CODE 80% FED 20% STATE BRIDGE 0013 006-0138
50300255	CONCRETE SUPERSTRUCTURE	CU YD	329.4	329.4
50300260	BRIDGE DECK GROOVING	SQ YD	980	980
50300300	PROTECTIVE COAT	SQ YD	1301	1301
50500505	STUD SHEAR CONNECTORS	EACH	555	555
50800205	REINFORCEMENT BARS, EPOXY COATED	POUND	97200	97200
51500100	NAME PLATES	EACH	1	1
52000110	PREFORMED JOINT STRIP SEAL	FOOT	92.5	92.5
52100010	ELASTOMERIC BEARING ASSEMBLY, TYPE I	EACH	10	10
52100520	ANCHOR BOLTS, 1"	EACH	40	40
54262715	METAL FLARED END SECTIONS 15"	EACH	2	2
542D1060	PIPE CULVERTS, CLASS D, TYPE 2 15"	FOOT	89	89
58600101	GRANULAR BACKFILL FOR STRUCTURES	CU YD	179	179
59100100	GEOCOMPOSITE WALL DRAIN	SQ YD	93	93
60100060	CONCRETE HEADWALLS FOR PIPE DRAINS	EACH	4	4
60146304	PIPE UNDERDRAINS FOR STRUCTURES 4"	FOOT	193	193

*SPECIALTY ITEMS

	CODE NO.	ITEM	UNIT	TOTAL QUANTITY	CONSTR. CODE 80% FED 20% STATE BRIDGE 0013 006-0138
	60500060	REMOVING INLETS	EACH	2	2
	60617800	PAVED FLUME	FOOT	10	10
*	63000001	STEEL PLATE BEAM GUARDRAIL, TYPE A, 6 FOOT POSTS	FOOT	362.5	362.5
*	63100085	TRAFFIC BARRIER TERMINAL, TYPE 6	EACH	4	4
*	63100167	TRAFFIC BARRIER TERMINAL, TYPE 1 (SPECIAL) TANGENT	EACH	3	3
	63200310	GUARDRAIL REMOVAL	FOOT	537.5	537.5
	66700205	PERMANENT SURVEY MARKERS, TYPE I	EACH	3	3
*	66900200	NON-SPECIAL WASTE DISPOSAL	CU YD	326	326
*	66900530	SOIL DISPOSAL ANALYSIS	EACH	3	3
*	66901001	REGULATED SUBSTANCES PRE-CONSTRUCTION PLAN	L SUM	1	1
*	66901003	REGULATED SUBSTANCES FINAL CONSTRUCTION REPORT	L SUM	1	1
*	66901006	REGULATED SUBSTANCES MONITORING	CAL DA	4	4
	67000400	ENGINEER'S FIELD OFFICE, TYPE A	CAL MO	10	10
	67100100	MOBILIZATION	L SUM	1	1
*	72000100	SIGN PANEL-TYPE 1	SQ FT	28	28
*	72000200	SIGN PANEL-TYPE 2	SQ FT	10	10

*SPECIALTY ITEMS

	CODE NO.	ITEM	UNIT	TOTAL QUANTITY	CONSTR. CODE 80% FED 20% STATE BRIDGE 0013 006-0138
*	72400100	REMOVE SIGN PANEL ASSEMBLY, TYPE A	EACH	4	4
*	72400200	REMOVE SIGN PANEL ASSEMBLY, TYPE B	EACH	1	1
*	72501000	TERMINAL MARKER - DIRECT APPLIED	EACH	3	3
	72900100	METAL POST - TYPE A	FOOT	11	11
	73000100	WOOD SIGN SUPPORT	FOOT	56	56
*	78009004	MODIFIED URETHANE PAVEMENT MARKING - LINE 4"	FOOT	5920	5920
*	78100100	RAISED REFLECTIVE PAVEMENT MARKER	EACH	6	6
*	78200005	GUARDRAIL REFLECTORS, TYPE A	EACH	16	16
*	78200010	BARRIER WALL REFLECTORS, TYPE B	EACH	8	8
	78300200	RAISED REFLECTIVE PAVEMENT MARKER REMOVAL	EACH	6	6
	X5030305	CONCRETE WEARING SURFACE, 5"	SQ YD	227	227
	X5040100	PRECAST BRIDGE APPROACH SLAB	SQ FT	1930	1930
	X5080530	BAR TERMINATORS	EACH	116	116
	X5110310	SLOPE WALL REPAIR	SQ YD	39	39
	X5230174	DRAINAGE SCUPPERS, DS-11	EACH	4	4

*SPECIALTY ITEMS

MODEL: Bdr-Plan
FILE NAME: J:\22209.05\04_CADD\CADD_Drawings\D366M48-Borders.dgn

SINGH
SINGH + ASSOCIATES, INC.
CONSULTING ENGINEERS

USER NAME =	DESIGNED - LM	REVISED -	
	DRAWN - LM	REVISED -	
	CHECKED - JO	REVISED -	
PLOT DATE =	DATE - 01/06/2025	REVISED -	

STATE OF ILLINOIS
DEPARTMENT OF TRANSPORTATION

SUMMARY OF QUANTITIES

SCALE: 1"=50' | SHEET 5 OF 6 SHEETS | STA. | TO STA.

F.A.P RTE.	SECTION	COUNTY	TOTAL SHEETS	SHEET NO.
646	122V-BR1	BUREAU	69	7

CONTRACT NO. 66M48

ILLINOIS | FED. AID PROJECT

REV. 3/4/25 REV. 2/18/25

CODE NO.	ITEM	UNIT	TOTAL QUANTITY	CONSTR. CODE 80% FED 20% STATE BRIDGE 0013 006-0138
X6350204	LINEAR DELINEATOR PANELS, 4 INCH	EACH	16	16
X6350206	LINEAR DELINEATOR PANELS, 6 INCH	EACH	8	8
X7010216	TRAFFIC CONTROL & PROTECTION (SPECIAL)	L SUM	1	1
X7200061	TEMPORARY INFORMATION SIGNING	SQ FT	84	84
X7200203	DETOUR SIGNING	LSUM	1	1
Z0001899	JACK AND REMOVE EXISTING BEARINGS	EACH	10	10
Z0012754	STRUCTURAL REPAIR OF CONCRETE (DEPTH EQUAL TO OR LESS THAN 5 INCHES)	SQ FT	57	57
Z0013798	CONSTRUCTION LAYOUT	L SUM	1	1
Z0048665	RAILROAD PROTECTIVE LIABILITY INSURANCE	L SUM	1	1

*SPECIALTY ITEMS

MODEL: Bdr-SOQ
FILE NAME: J:\22209.05\04_CADD\CADD_Drawings\D366M48-Borders.dgn

SINGH
SINGH + ASSOCIATES, INC.
CONSULTING ENGINEERS

USER NAME =	DESIGNED - LM	REVISED -	
	DRAWN - LM	REVISED -	
	CHECKED - JO	REVISED -	
PLOT DATE =	DATE - 01/06/2025	REVISED -	

STATE OF ILLINOIS
DEPARTMENT OF TRANSPORTATION

SUMMARY OF QUANTITIES

SCALE: 1"=50' | SHEET 6 OF 6 SHEETS | STA. TO STA.

F.A.P RTE.	SECTION	COUNTY	TOTAL SHEETS	SHEET NO.
646	122V-BR1	BUREAU	69	8

CONTRACT NO. 66M48

ILLINOIS | FED. AID PROJECT

REV. 4/2/25 REV. 2/18/25

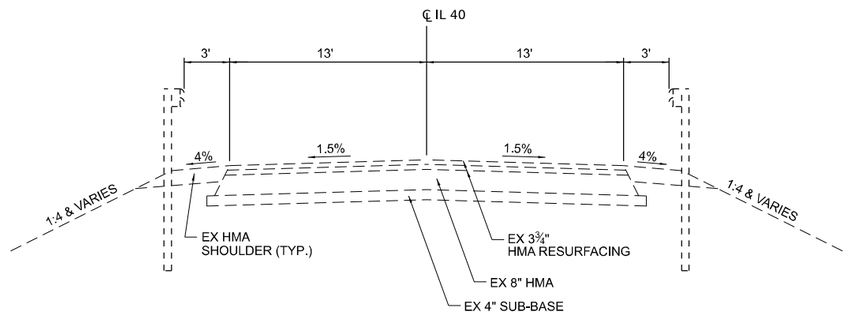

EXISTING ROADWAY TYPICAL SECTION

STA. 161+00 TO STA. 168+40
BRIDGE OMISSION BK TO BK OF ABUTS
STA. 163+58.93 TO STA. 165+97.76

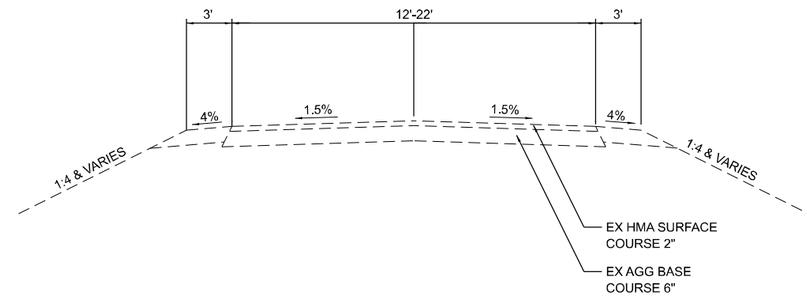

EXISTING DRIVEWAY TYPICAL SECTION

STA. 167+00 TO STA. 167+24

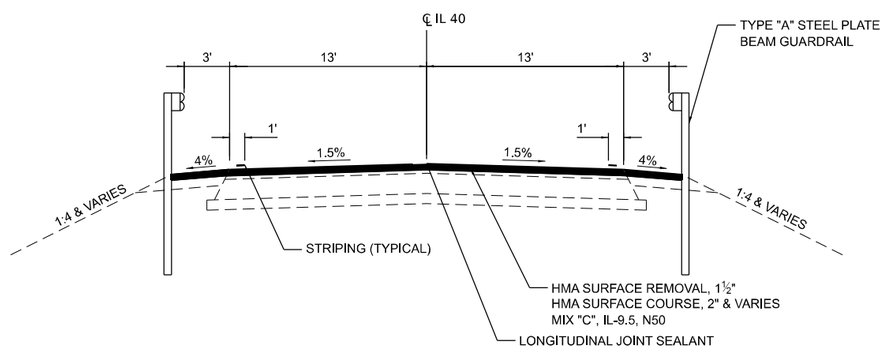

PROPOSED ROADWAY TYPICAL SECTION

STA. 161+00 TO STA. 168+40
PAVEMENT CONNECTOR STA. 163+04.25 TO STA. 163+30.25
BRIDGE APPROACH PAVEMENT STA. 163+30.25 TO STA. 163+60.25
BRIDGE STRUCTURE STA. 163+60.25 TO STA. 165+96.44
BRIDGE APPROACH PAVEMENT STA. 165+96.44 TO STA 166+26.44
PAVEMENT CONNECTOR STA. 166+26.44 TO 166+52.44

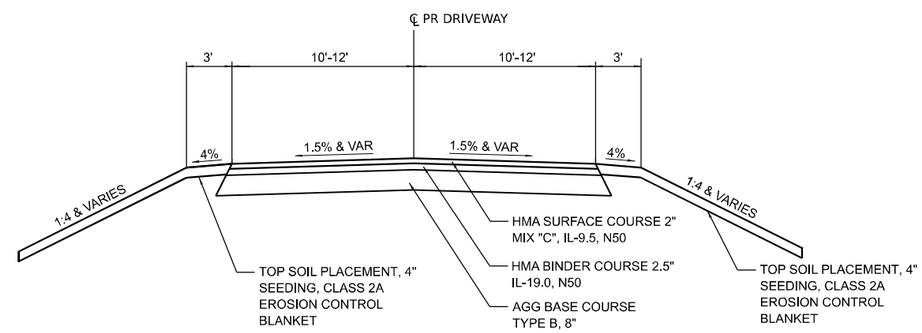

PROPOSED DRIVEWAY TYPICAL SECTION

STA. 10+00 TO STA. 11+63.16

MODEL: Bdr-Plan
FILE NAME: J:\22209.05\04_CADD\CADD_Drawings\D366M49-Borders.dgn

SINGH
SINGH + ASSOCIATES, INC.
CONSULTING ENGINEERS

USER NAME =	DESIGNED - LM	REVISED -	
	DRAWN - LM	REVISED -	
	CHECKED - JKO	REVISED -	
PLOT DATE =	DATE - 01/06/2025	REVISED -	

STATE OF ILLINOIS
DEPARTMENT OF TRANSPORTATION

TYPICAL SECTIONS

SCALE: 1"=50' | SHEET 1 OF 1 SHEETS | STA. TO STA.

F.A.P RTE.	SECTION	COUNTY	TOTAL SHEETS	SHEET NO.
646	122V-BR1	BUREAU	69	9
		CONTRACT NO. 66M48		
		ILLINOIS	FED. AID PROJECT	

REMOVAL ITEMS SCHEDULE

LOCATION			OFFSET	HOT-MIX ASPHALT SURFACE REMOVAL, 1 1/2"	DRIVEWAY PAVEMENT REMOVAL	GUARDRAIL REMOVAL	PIPE CULVERT REMOVAL	REMOVING INLETS
ALIGNMENT	STA FROM	STA TO	LT / RT	SQ YD	SQ YD	FOOT	FOOT	EACH
IL 40	161+00	162+99	LT / RT	755				
IL 40	166+58	168+40	LT / RT	648				
IL 40	166+50	167+56	LT		24			
IL 40	167+11	167+24	LT		94			
IL 40	162+24	163+37	LT			112.5		
IL 40	162+58	163+71	RT			112.5		
IL 40	165+89	166+89	LT			100.0		
IL 40	166+28	168+40	RT			212.5		
IL 40	166+77	167+67	LT					
IL 40	165+94		LT				32	
IL 40	165+94		LT					1
IL 40	166+27		RT					1
TOTALS				1,403	118	537.5	32	2

TREE REMOVAL AND TREE TRUNK PROTECTION SCHEDULE

LOCATION		OFFSET	TREE REMOVAL (6 TO 15 UNITS DIAMETER)	TREE TRUNK PROTECTION
ALIGNMENT	STATION	LT/RT	UNIT	EACH
IL 40	164+03	35 LT		1
IL 40	164+08	24 LT		2
IL 40	165+60	37 LT		1
IL 40	165+69	40 LT		2
IL 40	165+72	25 RT		1
IL 40	165+82	25 RT		1
IL 40	165+84	37 LT		1
IL 40	165+49	31 LT	9	
IL 40	165+63	29 LT	8	
TOTALS			17	9

EROSION CONTROL SCHEDULE

LOCATION			OFFSET	SEEDING, CLASS 2A	NITROGEN FERTILIZER NUTRIENT	PHOSPHORUS FERTILIZER NUTRIENT	POTASSIUM FERTILIZER NUTRIENT	EROSION CONTROL BLANKET	PERIMETER EROSION BARRIER	INLET AND PIPE PROTECTION
ALIGNMENT	STA FROM	STA TO	LT / RT	ACRE	POUND	POUND	POUND	SQ YD	FOOT	EACH
IL 40	161+00	161+61	LT	0.01	0.9	0.9	0.9	15	62	
IL 40	161+00	164+83	RT	0.07	6.3	6.3	6.3	303	400	
IL 40	162+11	164+46	LT	0.05	4.5	4.5	4.5	222	251	
IL 40	164+91	165+91	LT	0.04	3.6	3.6	3.6	165	117	
IL 40	165+25	166+25	RT	0.04	3.6	3.6	3.6	167	129	
IL 40	166+28	168+40	RT	0.01	0.9	0.9	0.9	47	211	
IL 40	165+97	167+88	LT	0.15	13.5	13.5	13.5	696	162	
IL 40	167+00	168+68	LT	0.12	10.8	10.8	10.8	548	247	
IL 40	160+48		51 LT							1
IL 40	160+28		30 LT							1
IL 40	160+28		29 LT							1
IL 40	160+52		17 RT							1
IL 40	161+39		32 LT							1
IL 40	161+41		33 LT							1
IL 40	162+55		61 LT							1
IL 40	162+52		65 RT							1
IL 40	162+53		66 RT							1
TOTALS				0.5	44	44	44	2163	1579	9

ILL RTE 40 — BUREAU COUNTY

PERMANENT SURVEY MARKER SCHEDULE

MONUMENT NUMBER	DESCRIPTION	APPROXIMATE LOCATION	EXISTING MONUMENT TYPE	PROPOSED MONUMENT TYPE	MONUMENT RECORD TO BE RECORDED	RESPONSIBILITY
PT1620223	PT STA 162+02.23	STA 162+02.23	NONE	TYPE 1	NO	1
1650456	STA 165+04.56	INTERSECTION ILL 40 / CL TRACK (MAIN 2)	NONE	CUT CROSS	NO	1
PC1696685	PC STA 169+66.85	STA 169+66.85	NONE	TYPE 1	NO	1

UNKNOWN MONUMENTS SET BY OTHERS MAY EXIST. IF FOUND, R.E. WILL DIRECT PLATS AND PLANS TO TO TIE ANY UNLISTED MONUMENT SUBJECT TO DESTRUCTION FROM THE BRIDGE REPLACEMENT WORK, FOR THE PURPOSE OF RESETTING IT AFTER JOB COMPLETION.
NO MONUMENT RECORDS WILL BE REQUIRED.

RESPONSIBILITY:
1) RESIDENT TO RE-ESTABLISH MONUMENT (PAY ITEM REQUIRED. PERMANENT SURVEY MARKER, TYPE 1)
2) PLATS AND PLANS TO RE-ESTABLISH MONUMENT

EARTHWORK SCHEDULE (SHRINKAGE = 25%)

LOCATION			TOP SOIL EXCAVATION (DEPTH = 4")	TOP SOIL PLACEMENT (DEPTH = 4")	EARTH EXCAVATION	SHRINKAGE ADJUSTMENT	FURNISHED EXCAVATION	BALANCE WASTE (+) OR SHORTAGE (-)
ALIGNMENT	STA FROM	STA TO	CU YD	CU YD	CU YD	CU YD	CU YD	CU YD
IL 40	160+50	161+00	0.0	0.0	0.0	0.0	0.0	0.0
IL 40	161+00	161+50	0.0	0.0	0.0	0.0	0.0	0.0
IL 40	161+50	162+00	0.0	0.0	0.0	0.0	0.0	0.0
IL 40	162+00	162+50	2.5	2.5	0.0	0.0	0.5	-0.5
IL 40	162+50	163+00	5.6	5.6	0.0	0.0	1.4	-1.4
IL 40	163+00	163+50	4.7	4.6	0.0	0.0	1.9	-1.9
IL 40	163+50	164+00	1.6	1.5	0.0	0.0	1.1	-1.1
IL 40	164+00	164+50	0.0	0.0	0.0	0.0	0.0	0.0
IL 40	164+50	165+00	0.0	0.0	0.0	0.0	0.0	0.0
IL 40	165+00	165+50	0.0	0.0	0.0	0.0	0.0	0.0
IL 40	165+50	166+00	1.6	1.6	0.0	0.0	1.4	-1.4
IL 40	166+00	166+50	6.2	6.1	0.0	0.0	5.7	-5.7
IL 40	166+50	167+00	5.8	5.7	6.9	5.2	5.3	-0.1
IL 40	167+00	167+50	22.3	16.0	6.9	5.2	99.6	-94.4
IL 40	167+50	167+73	24.7	18.6	0.0	0.0	172.4	-172.4
IL 40	167+73	168+00	34.5	18.1	0.0	0.0	374.0	-374.0
IL 40	168+00	168+12	14.5	5.9	0.8	0.6	194.6	-194.0
IL 40	168+12	168+27	16.2	12.5	0.7	0.5	172.6	-172.1
IL 40	168+27	168+40	11.6	11.7	0.5	0.4	63.2	-62.8
TOTALS			152	110	15	12	1095	-1082

DRAINAGE SCHEDULE

LOCATION			OFFSET	STONE DUMPED RIPRAP, CLASS A3	FILTER FABRIC	PIPE CULVERT CLASS D, TY 2 15"	METAL FLARED END SECTIONS 15"	PAVED FLUME
ALIGNMENT	STA FROM	STA TO	LT / RT	SQ YD	SQ YD	FOOT	EACH	
IL 40	166+14		21 LT	17	17			
IL 40	166+46		21 RT	35	35			
IL 40	167+53	168+46	64 LT			89		
IL 40	167+52		60 LT				1	
IL 40	168+62		65 LT				1	
IL 40	166+12	166+17	16 LT					5
IL 40	166+44	166+49	16 LT					5
TOTALS				52	52	89	2	10

MODEL: Bdl-Plan
FILE NAME: J:\22209.05\04_CADD\CADD_Drawings\D365M48-Borders.dgn

SINGH + ASSOCIATES, INC. CONSULTING ENGINEERS

USER NAME =	DESIGNED - LM	REVISED -
	DRAWN - LM	REVISED -
	CHECKED - JO	REVISED -
PLOT DATE =	DATE - 01/06/2025	REVISED -

STATE OF ILLINOIS
DEPARTMENT OF TRANSPORTATION

SCHEDULE OF QUANTITIES

SCALE: 1"=50' | SHEET 1 OF 1 SHEETS | STA. TO STA.

F.A.P RTE.	SECTION	COUNTY	TOTAL SHEETS	SHEET NO.
646	122V-BR1	BUREAU	69	10

CONTRACT NO. 66M48

ILLINOIS | FED. AID PROJECT

SIGNING SCHEDULE

LOCATION	EX LOCATION	PR LOCATION	OFFSET	SIGN DESCRIPTION	SIGN DESIGNATION	PROPOSED PANEL DIMENSIONS	SIGN PANEL - TYPE 1	SIGN PANEL - TYPE 2	METAL POST TYPE A	WOOD SIGN SUPPORT	REMOVE SIGN PANEL ASSEMBLY, TYPE A	REMOVE SIGN PANEL ASSEMBLY, TYPE B
ALIGNMENT	STA	STA	LT / RT		MUTCD / IDOT	IN	SQ FT	SQ FT	FOOT	FOOT	EACH	EACH
IL 40	162+56	162+56	LT	SPEED LIMIT - 40 MPH	R2-1	36X30	7.5			13	1	
IL 40	165+03	165+03	LT	40 BUREAU 6	M1-I200	18X18					1	
IL 40	166+41	166+41	LT	SPEED LIMIT - 40 MPH	R2-1	36X30	7.5					
IL 40	166+41	166+41	LT	BUDA 500	I2-1	30X48		10*		31*		1
IL 40	166+98	167+13	LT	BUREAU CO CRIME STOPPERS	SPECIAL	24X24	4*		11*		1	
IL 40	166+98	167+13	LT	2ND - 4TH MON 7 PM HI-WAY CAFE	SPECIAL	8X24	1.3					
IL 40	166+93	166+93	RT	SPEED LIMIT - 55 MPH	R2-1	36X30	7.5			11.5	1	
TOTALS							28	10	11	56	4	1

*PROVIDED BY OTHERS

PAVING AND GUARDRAIL SCHEDULE

LOCATION			OFFSET	BITUMINOUS MATERIALS (TACK COAT)	LONGITUDINAL JOINT SEALANT	HOT-MIX ASPHALT BINDER COURSE, IL-9.0, N50	HOT-MIX ASPHALT SURFACE COURSE, IL-9.5, MIX "C", N50	AGGREGATE BASE COURSE, TYPE B 8"	TRAFFIC BARRIER TERMINAL, TYPE 1 (SPECIAL) TANGENT	STEEL PLATE BEAM GUARDRAIL, TYPE A, 6 FOOT POSTS	TRAFFIC BARRIER TERMINAL, TYPE 6
ALIGNMENT	STA FROM	STA TO	LT / RT	POUND	FOOT	TON	TON	SQ YD	EACH	FOOT	EACH
IL 40	161+00	162+99	LT / RT	340			114				
IL 40	166+58	168+40	LT / RT	292			149				
DRIVEWAY	10+00	11+63	LT	183		57	46	407			
IL 40	161+00	162+99	LT/RT		199						
IL 40	166+58	168+40	LT/RT		182						
IL 40	162+28.53	162+78.53	16' LT						1		
IL 40	162+78.03	162+91.03	16' LT							12.5	
IL 40	162+91.03	163+28.53	16' LT								1
IL 40	161+85.29	162+35.53	16' RT						1		
IL 40	162+35.53	163+23.03	16' RT							87.5	
IL 40	163+23.03	163+60.53	16' RT								1
IL 40	165+96.16	166+33.66	16' LT								1
IL 40	166+33.66	167+21.16	16' LT							87.5	
IL 40	167+21.16	167+71.16	16' LT						1		
IL 40	166+28.16	166+65.66	16' RT								1
IL 40	166+65.66	168+40.65	16' RT							175	
TOTALS				815	381	57	309	407	3	362.5	4

REFLECTORS AND DELINEATOR SCHEDULE

LOCATION			OFFSET	LENGTH	GUARDRAIL REFLECTORS, TYPE A	BARRIER WALL REFLECTORS, TYPE B	LINEAR DELINEATOR PANELS, 4 INCH	LINEAR DELINEATOR PANELS, 6 INCH	TERM MARKER DIRECT APPLIED
ALIGNMENT	STA FROM	STA TO	LT / RT	FT	EACH	FOOT	FOOT	EACH	EACH
IL 40	162+28.53	163+28.53	LT	100	4		4		
IL 40	161+85.29	163+60.53	RT	175	4		4		
IL 40	165+96.16	167+71.16	LT	175	4		4		
IL 40	166+28.16	168+40.65	RT	212.5	4		4		
IL 40	163+28.53	165+96.16	LT	268		4		4	
IL 40	163+60.53	166+28.16	RT	268		4		4	
IL 40	162+28		LT						1
IL 40	162+22		RT						1
IL 40	167+09		LT						1
TOTALS				1,199	16	8	16	8	3

PAVEMENT MARKING & RRPM SCHEDULE

LOCATION			OFFSET	MODIFIED URETHANE (TWO COATS) 4" Y PAVT CL	MODIFIED URETHANE (TWO COATS) 4" W PAVT EDGE	RAISED REFLECTIVE PAVEMENT MARKER REMOVAL	RAISED REFLECTIVE PAVEMENT MARKER INSTALL AMBER
ALIGNMENT	STA FROM	STA TO	LT / RT	FOOT	FOOT	EACH	EACH
IL 40	161+00	168+40	0 LT/RT	2,960		6	6
IL 40	161+00	168+40	12 LT		1480		
IL 40	161+00	168+40	12 RT		1480		
TOTALS				5,920		6	6

MODEL: Bdr-Plan
FILE NAME: J:\22209.05\04_CADD\CADD_Drawings\D366M48-Borders.dgn

SINGH
SINGH + ASSOCIATES, INC.
CONSULTING ENGINEERS

USER NAME =	DESIGNED - LM	REVISED -	
	DRAWN - LM	REVISED -	
	CHECKED - JO	REVISED -	
PLOT DATE =	DATE - 01/06/2025	REVISED -	

STATE OF ILLINOIS
DEPARTMENT OF TRANSPORTATION

SCHEDULE OF QUANTITIES

SCALE: 1"=50' | SHEET 2 OF 2 SHEETS | STA. TO STA.

F.A.P RTE.	SECTION	COUNTY	TOTAL SHEETS	SHEET NO.
646	122V-BR1	BUREAU	69	11
		CONTRACT NO. 66M48		
	ILLINOIS	FED. AID PROJECT		

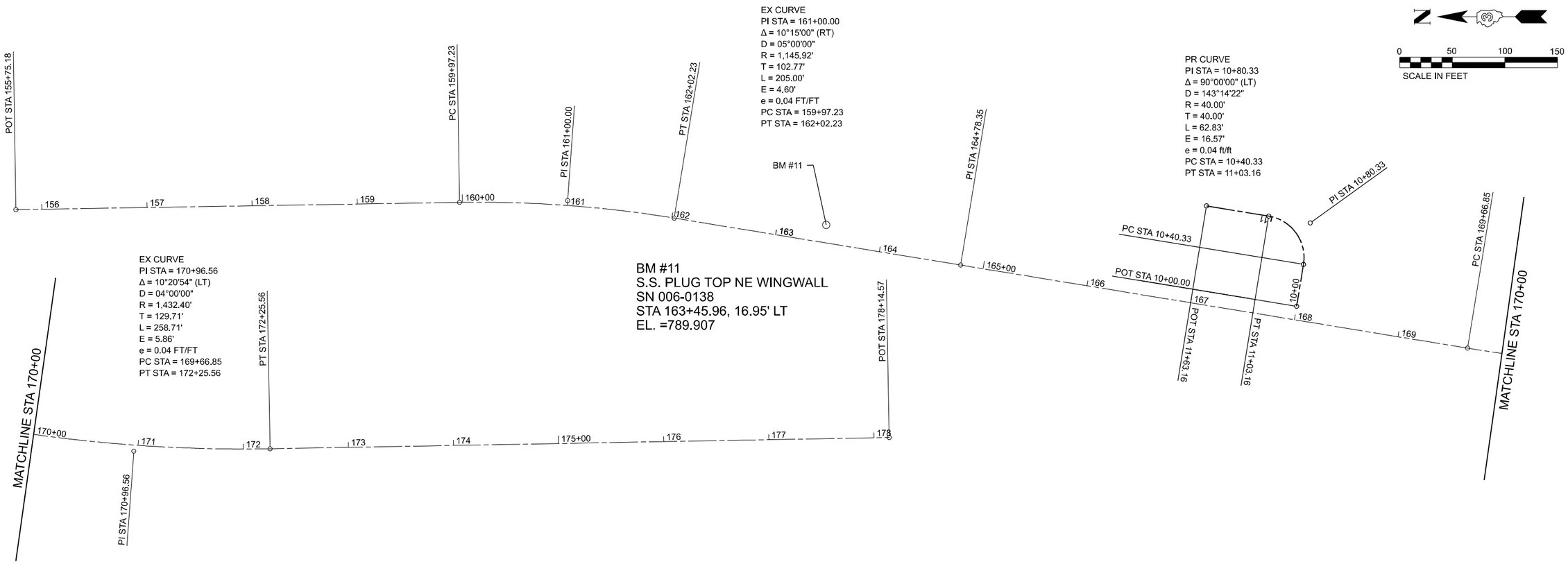

PI STA 161+00.00, 4.60' LT

CP 40529
STA 162+50.39, 23.09' LT

CP 1
STA 167+00.89, 27.93' LT

PC STA 169+66.85

MODEL: Bd-Plan
FILE NAME: J:\22209.05\04_CADD\CADD_Drawings\D365M48-Borders.dgn

SINGH
SINGH + ASSOCIATES, INC.
CONSULTING ENGINEERS

USER NAME =	DESIGNED - LM	REVISED -	
	DRAWN - LM	REVISED -	
	CHECKED - JO	REVISED -	
PLOT DATE =	DATE - 01/06/2025	REVISED -	

STATE OF ILLINOIS
DEPARTMENT OF TRANSPORTATION

IL 40
ALIGNMENT, TIES AND BENCHMARKS

SCALE: 1"=50' | SHEET 1 OF 1 SHEETS | STA. 155+75.18 TO STA. 178+14.57

F.A.P RTE.	SECTION	COUNTY	TOTAL SHEETS	SHEET NO.
646	122V-BR1	BUREAU	69	12
		CONTRACT NO. 66M48		
		ILLINOIS	FED. AID PROJECT	

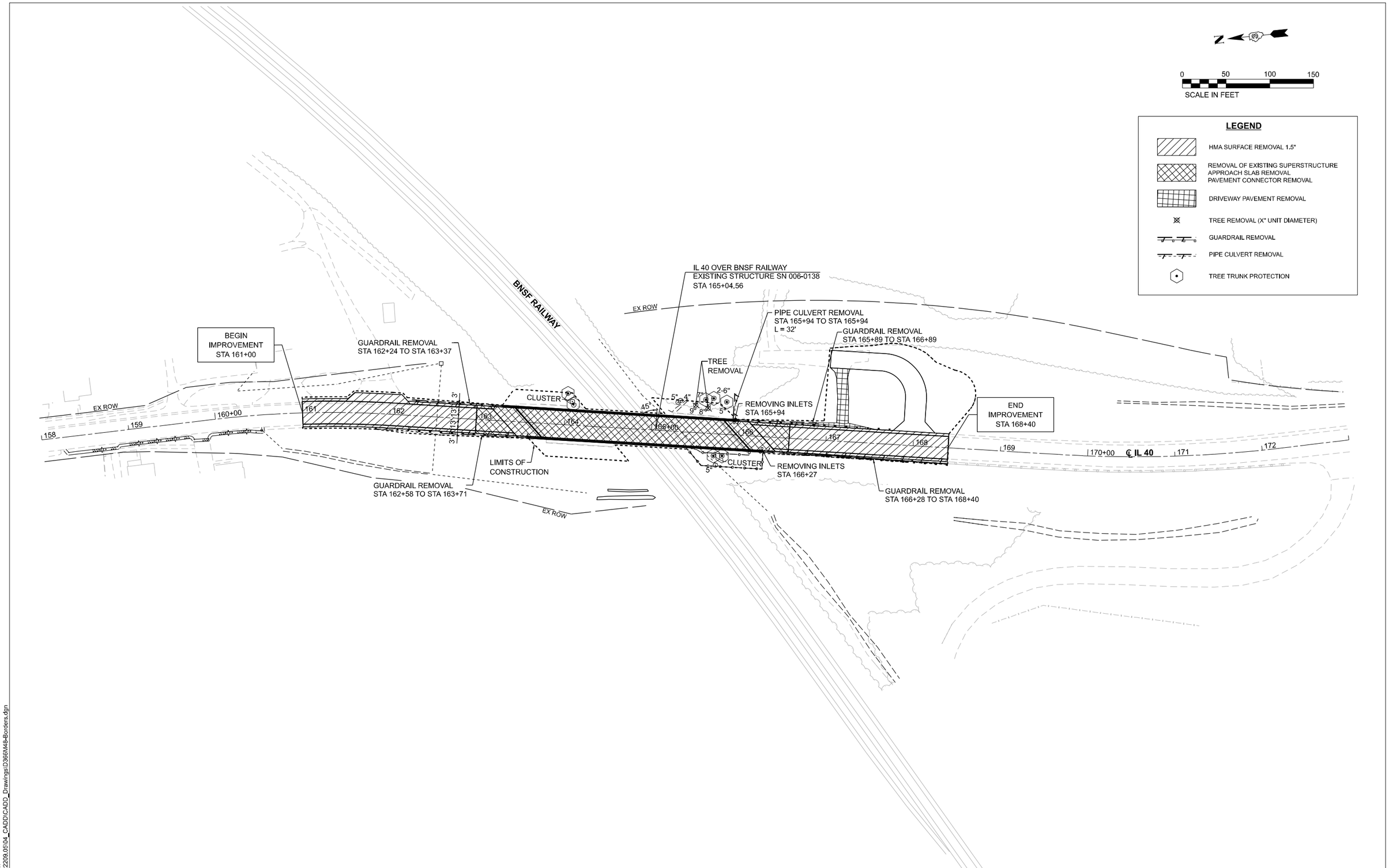

MODEL: Bdr-Plan
FILE NAME: J:\22209.05\04_CADD\CADD_Drawings\D366\M48-Borders.dgn

SINGH
SINGH + ASSOCIATES, INC.
CONSULTING ENGINEERS

USER NAME =	DESIGNED - LM	REVISED -	
	DRAWN - LM	REVISED -	
	CHECKED - JO	REVISED -	
PLOT DATE =	DATE - 01/06/2025	REVISED -	

STATE OF ILLINOIS
DEPARTMENT OF TRANSPORTATION

IL 40
ROADWAY EXISTING / REMOVAL PLAN

SCALE: 1"=50' | SHEET 1 OF 1 SHEETS | STA. 158+00.00 TO STA. 173+00.00

F.A.P RTE.	SECTION	COUNTY	TOTAL SHEETS	SHEET NO.
646	122V-BR1	BUREAU	69	13
		CONTRACT NO. 66M48		
		ILLINOIS	FED. AID PROJECT	

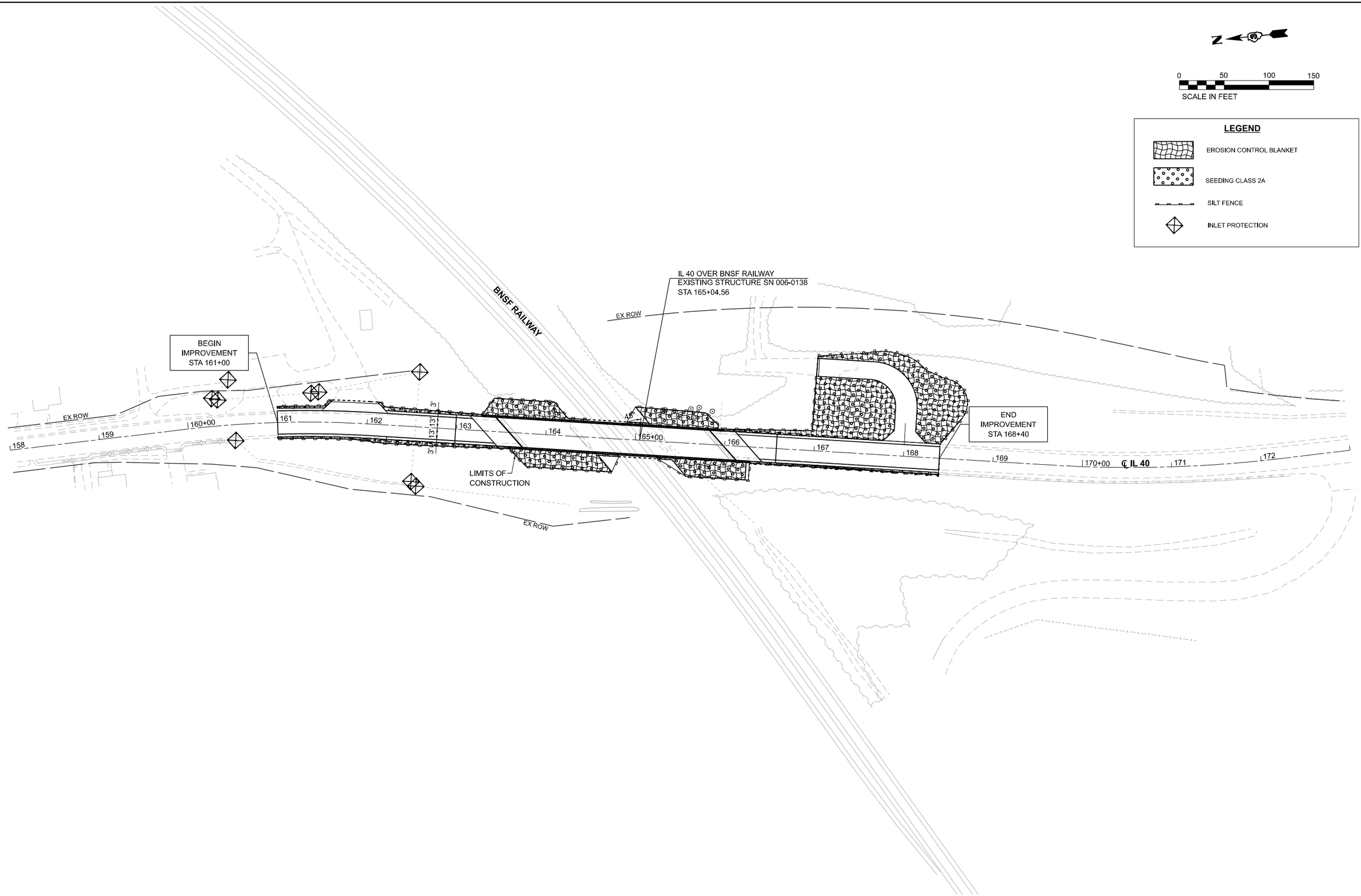

MODEL: Bdr-Plan
FILE NAME: J:\22209.05\04_CADD\CADD_Drawings\D365M48-Borders.dgn

SINGH
SINGH + ASSOCIATES, INC.
CONSULTING ENGINEERS

USER NAME =	DESIGNED - LM	REVISED -	
	DRAWN - LM	REVISED -	
	CHECKED - JO	REVISED -	
PLOT DATE =	DATE - 01/06/2025	REVISED -	

STATE OF ILLINOIS
DEPARTMENT OF TRANSPORTATION

IL 40
EROSION CONTROL & LANDSCAPING PLAN

SCALE: 1"=50' | SHEET 1 OF 1 SHEETS | STA. 158+00.00 TO STA. 173+00.00

F.A.P RTE.	SECTION	COUNTY	TOTAL SHEETS	SHEET NO.
646	122V-BR1	BUREAU	69	14
		CONTRACT NO. 66M48		
	ILLINOIS	FED. AID PROJECT		

NOTE:
SEE GR SCHEDULE FOR STATION LIMITS.

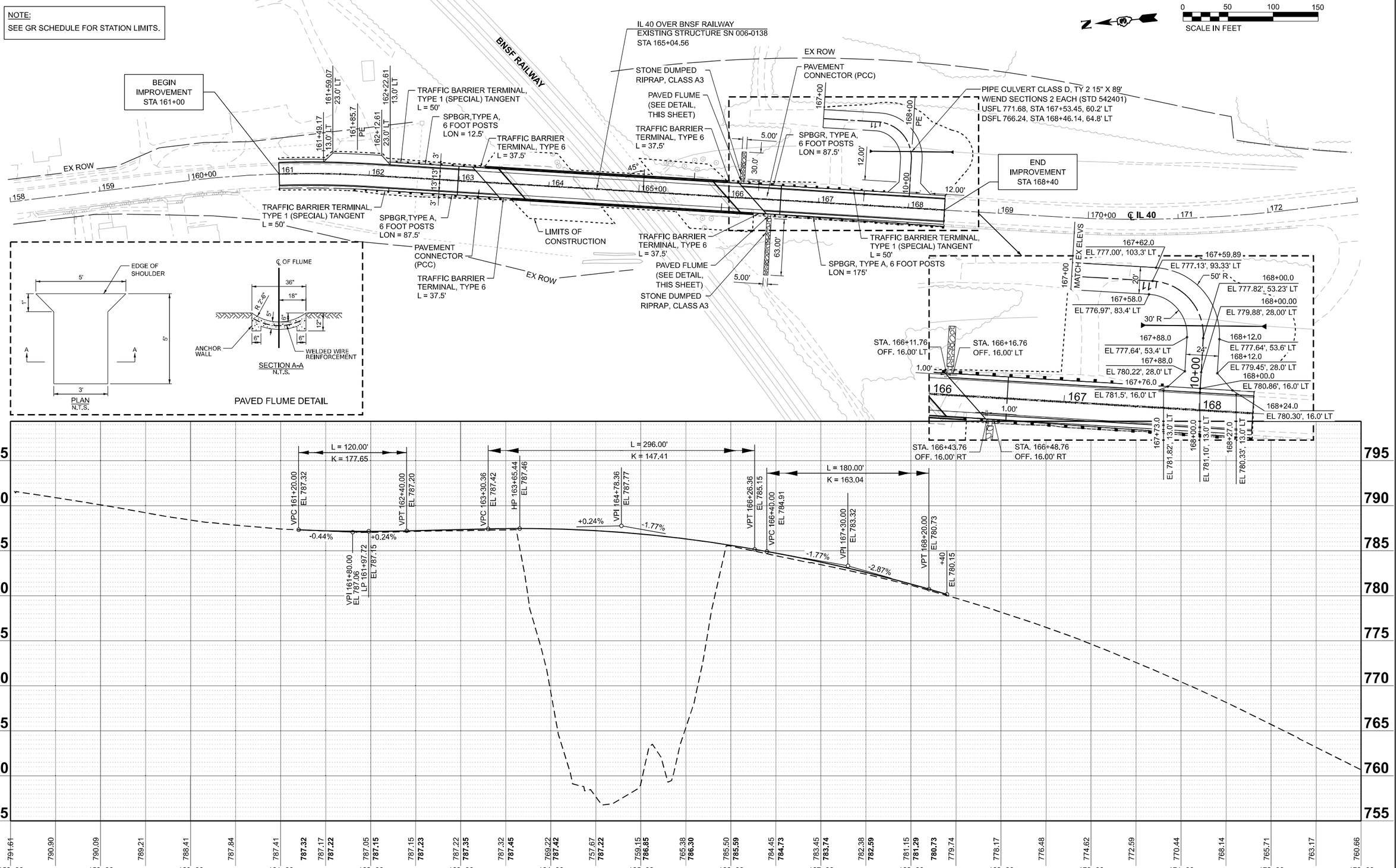

MODEL: Bdr-Plan
FILE NAME: J:\22209.05\04_CADD\CADD_Drawings\D366\M48-Borders.dgn

SINGH
SINGH + ASSOCIATES, INC.
CONSULTING ENGINEERS

USER NAME =	DESIGNED - LM	REVISED -	
	DRAWN - LM	REVISED -	
	CHECKED - JO	REVISED -	
PLOT DATE =	DATE - 01/06/2025	REVISED -	

STATE OF ILLINOIS
DEPARTMENT OF TRANSPORTATION

IL 40
PLAN AND PROFILE

SCALE: 1"=50' | SHEET 1 OF 1 SHEETS | STA. 158+00.00 TO STA. 173+00.00

F.A.P RTE.	SECTION	COUNTY	TOTAL SHEETS	SHEET NO.
646	122V-BR1	BUREAU	69	15
		CONTRACT NO. 66M48		
		ILLINOIS	FED. AID PROJECT	

DETOUR GENERAL NOTES

1. ALL SIGNING MUST BE IN ACCORDANCE WITH THE APPLICABLE PROVISIONS OF THE STATE OF ILLINOIS "STANDARD SPECIFICATIONS FOR ROAD AND BRIDGE CONSTRUCTION" (SSRBC) LATES EDITION,THE DETAILS IN THESE PLANS, THE LATEST EDITION OF THE IDOT BUREAU OF DESIGN AND ENVIRONMENT HIGHWAY STANDARDS AND THE LATEST EDITION OF THE "MANUAL ON UNIFORM TRAFFIC CONTROL DEVICES".

2. THE CONTRACTOR SHALL BE RESPONSIBLE FOR ENSURING THAT ALL BARRICADES, SIGNS, LIGHTS AND OTHER DEVICES INSTALLED ARE IN PLACE AND OPERATING 24 HOURS EACH DAY INCLUDING SUNDAYS AND HOLIDAYS DURING THE TIME THIS CONSTRUCTION STAGING IS IN EFFECT.

3. ALL EXISTING SIGNING THAT IS NOT APPLICABLE WHILE THE CONSTRUCTION IS IN EFFECT MUST BE COMPLETELY COVERED BY THE CONTRACTOR. DRILLING INTO THE FACE OF SIGNS WILL NOT BE ALLOWED. NO TAPE WILL BE ALLOWED ON EXISTING FACES OF SIGNS.

4. THE SIZES OF ALL SIGNS NOT SPECIFIED IN THESE PLANS SHALL BE OVERSIZED AS REQUIRED BY THE MANUAL ON UNIFORM TRAFFIC CONTROL DEVICES.

5. AS A MINIMUM, ALL AMBER FLASHING LIGHTS THAT ARE REQUIRED MUST MEET THE REQUIREMENTS FOR TYPE A - LOW INTENSITY FLASHING LIGHTS IN ARTICLE 702.04 OF THE STANDARD SPECIFICATIONS. ALL LIGHTS SHALL OPERATE DURING HOURS OF DARKNESS. ONLY LIGHTS THAT HAVE BEEN APPROVED BY THE ILLINOIS DEPARTMENT OF TRANSPORTATION MUST BE USED.

6. THE CONTRACTOR MUST MAINTAIN ACCESS TO ALL PRIVATE AND COMMERCIAL DRIVEWAYS DURING CONSTRUCTION.

7. DETOUR, CARDINAL DIRECTION, AND DIRECTIONAL ARROW SIGNS SHALL BE BLACK ON FLUORESCENT ORANGE SHEETING.

8. THE CONTRACTOR MUST CONDUCT HIS WORK IN SUCH A MANNER THAT EMERGENCY VEHICLES WILL HAVE ACCESS TO THE AREA AT ALL TIMES.

9. THE CONTRACTOR MUST NOTIFY IDOT BUREAU OF TRAFFIC AS REQUIRED 72 HOURS IN ADVANCE OF BEGINNING WORK.

10. THE CONTRACTOR SHALL NOT OBSTRUCT ANY EXISTING SIGN WITH THE PLACEMENT OF DETOUR SIGNAGE.

11. CONFIRMATION DETOUR ROUTE SIGNING AS A MINIMUM SHALL BE ERECTED ADJACENT TO EXISTING ROUTE CONFIRMATION SIGNS.

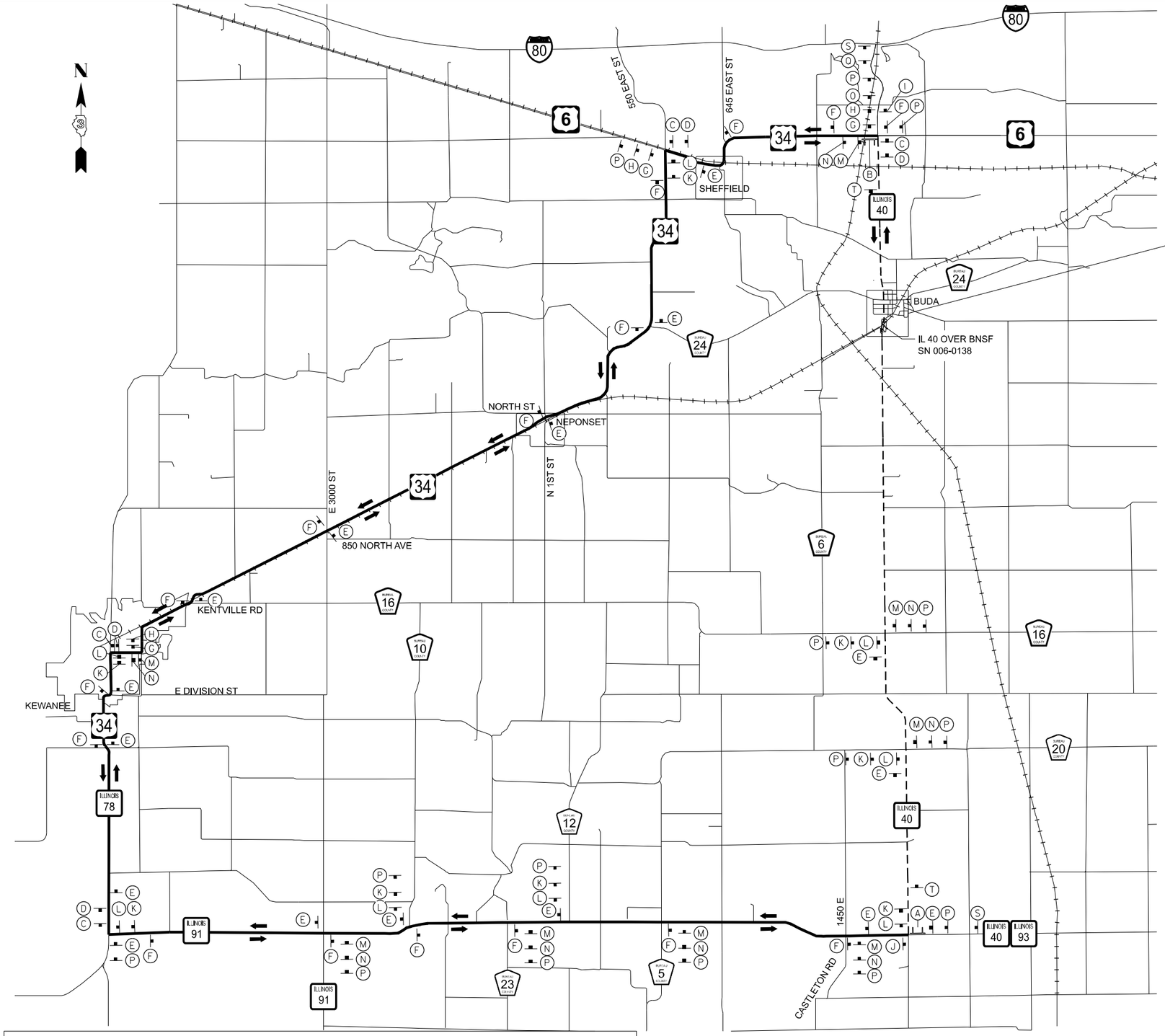

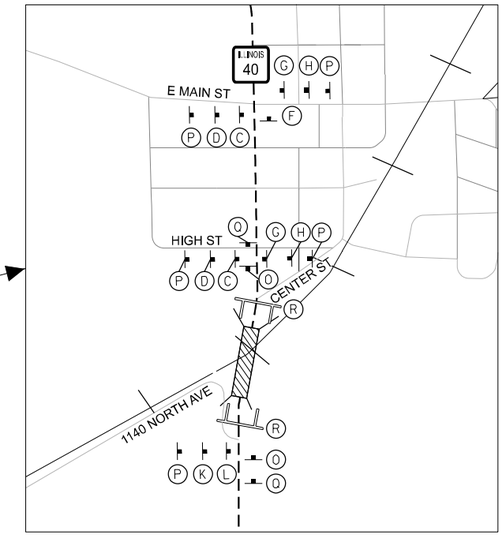

IL 40 FULL DETOUR SIGN LEGEND:

R11-3A-4830 ROAD CLOSED 10 MILES AHEAD LOCAL TRAFFIC ONLY / DETOUR — M4L-10L-4818F0 (A)	R11-3A-4830 ROAD CLOSED 3 MILES AHEAD LOCAL TRAFFIC ONLY / DETOUR — M4L-10R-4818F0 (B)	DETOUR M4-8-2412F0 / SOUTH M3-3-2412F0 / ILLINOIS 40 M1-5-2424 / ← M6-1-2115F0 (C)	DETOUR M4-8-2412F0 / SOUTH M3-3-2412F0 / ILLINOIS 40 M1-5-2424 / ↰ M5-1L-2115F0 (D)
DETOUR M4-8-2412F0 / NORTH M3-1-2412F0 / ILLINOIS 40 M1-5-2424 / ↑ M6-3-2115F0 (E)	DETOUR M4-8-2412F0 / SOUTH M3-3-2412F0 / ILLINOIS 40 M1-5-2424 / ↑ M6-3-2115F0 (F)	DETOUR M4-8-2412F0 / SOUTH M3-3-2412F0 / ILLINOIS 40 M1-5-2424 / → M6-1-2115F0 (G)	DETOUR M4-8-2412F0 / SOUTH M3-3-2412F0 / ILLINOIS 40 M1-5-2424 / ↱ M5-1R-2115F0 (H)
END DETOUR M4-8A-2415F0 / NORTH M3-1-2412F0 / ILLINOIS 40 M1-5-2424 (I)	END DETOUR M4-8A-2415F0 / SOUTH M3-3-2412F0 / ILLINOIS 40 M1-5-2424 (J)	DETOUR M4-8-2412F0 / NORTH M3-1-2412F0 / ILLINOIS 40 M1-5-2424 / ↱ M5-1R-2115F0 (K)	DETOUR M4-8-2412F0 / NORTH M3-1-2412F0 / ILLINOIS 40 M1-5-2424 / → M6-1-2115F0 (L)
DETOUR M4-8-2412F0 / NORTH M3-1-2412F0 / ILLINOIS 40 M1-5-2424 / ← M6-1-2115F0 (M)	DETOUR M4-8-2412F0 / NORTH M3-1-2412F0 / ILLINOIS 40 M1-5-2424 / ↰ M5-1L-2115F0 (N)	ROAD CLOSED 500' (O) W20-3-48480F0	DETOUR AHEAD (P) W20-2-48480F0
ROAD CLOSED AHEAD (Q) W20-3-48480F0	ROAD CLOSED (R) R11-2-4830	TEMPORARY INFORMATION SIGNS: ROAD DETOUR AHEAD EXPECT DELAYS (S)	ROAD CLOSED TO THRU TRAFFIC (T)

*SEE TEMPORARY INFORMATION SIGNING DETAILS

LEGEND:

- WORK ZONE
- TRAFFIC DIRECTION
- TEMPORARY SIGN
- TYPE III BARRICADE
- DETOUR ROUTE
- LOCAL TRAFFIC ONLY

NOT TO SCALE

*FO = FLUORESCENT ORANGE SHEETING

MODEL: Bdt-Plan
FILE NAME: J:\22209.05\04_CADD\CADD_Drawings\D366M48-Borders.dgn

SINGH
SINGH + ASSOCIATES, INC.
CONSULTING ENGINEERS

USER NAME =	DESIGNED - LM	REVISED -	
	DRAWN - LM	REVISED -	
	CHECKED - JKO	REVISED -	
PLOT DATE =	DATE - 01/06/2025	REVISED -	

STATE OF ILLINOIS
DEPARTMENT OF TRANSPORTATION

IL 40
TEMPORARY DETOUR PLAN

SCALE: NTS | SHEET 2 OF 2 SHEETS | STA. | TO STA.

F.A.P RTE.	SECTION	COUNTY	TOTAL SHEETS	SHEET NO.
646	122V-BR1	BUREAU	69	17
		CONTRACT NO. 66M48		
		ILLINOIS	FED. AID PROJECT	

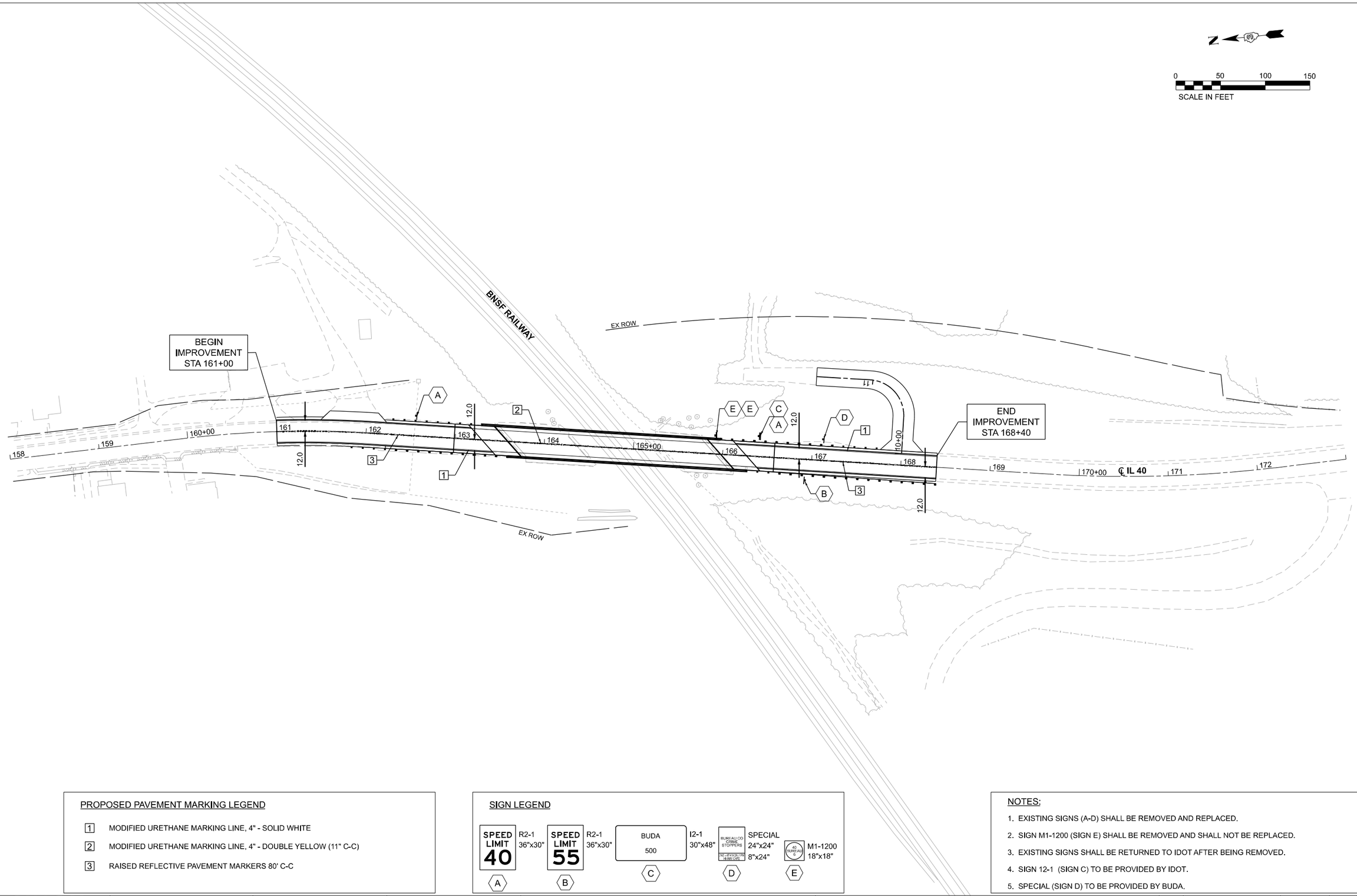

PROPOSED PAVEMENT MARKING LEGEND

1. MODIFIED URETHANE MARKING LINE, 4" - SOLID WHITE
2. MODIFIED URETHANE MARKING LINE, 4" - DOUBLE YELLOW (11" C-C)
3. RAISED REFLECTIVE PAVEMENT MARKERS 80' C-C

SIGN LEGEND

Sign	Size	Code
SPEED LIMIT 40	36"x30"	R2-1 (A)
SPEED LIMIT 55	36"x30"	R2-1 (B)
BUDA 500	30"x48"	I2-1 (C)
BURN ALL CD CRIME STOPPERS PHONE 1-844-CRIME-CD	24"x24" 8"x24"	SPECIAL (D)
40 BURN ALL CD	18"x18"	M1-1200 (E)

NOTES:

1. EXISTING SIGNS (A-D) SHALL BE REMOVED AND REPLACED.
2. SIGN M1-1200 (SIGN E) SHALL BE REMOVED AND SHALL NOT BE REPLACED.
3. EXISTING SIGNS SHALL BE RETURNED TO IDOT AFTER BEING REMOVED.
4. SIGN 12-1 (SIGN C) TO BE PROVIDED BY IDOT.
5. SPECIAL (SIGN D) TO BE PROVIDED BY BUDA.

MODEL: Bdr-Plan
FILE NAME: J:\22209.05\04_CADD\CADD_Drawings\D366M48-Borders.dgn

SINGH
SINGH + ASSOCIATES, INC.
CONSULTING ENGINEERS

USER NAME =	DESIGNED - LM	REVISED -	
	DRAWN - LM	REVISED -	
	CHECKED - JO	REVISED -	
PLOT DATE =	DATE - 01/06/2025	REVISED -	

STATE OF ILLINOIS
DEPARTMENT OF TRANSPORTATION

IL 40
PAVEMENT MARKING PLAN AND SIGNING PLAN

SCALE: 1"=50' | SHEET 1 OF 1 SHEETS | STA. 158+00.00 TO STA. 173+00.00

F.A.P RTE.	SECTION	COUNTY	TOTAL SHEETS	SHEET NO.
646	122V-BR1	BUREAU	69	18
		CONTRACT NO. 66M48		
		ILLINOIS	FED. AID PROJECT	

Benchmark: BM11 S.S. plug on top of NE wingwall of SN 006-0138 at Station 163+45.96, 16.95' Lt., Elev. 789.907

Existing Structure: Structure No. 006-0138 was originally built in 1982 as F.A. Rt. 646 (ILL. Rt. 88), Section 122VB-R in Bureau county as a 3 span continuous steel beam (33WF) structure supporting a 7.5" R.C. slab. The substructure consists of concrete pile stub abutments and multi-column concrete piers on concrete pile supported footings. The existing back-to-back abutment length is 238'-10". The existing deck width is 35'-2" out-to-out. The bridge deck is to be removed and replaced and the structure is to be repaired as detailed in these plans. IL 40 will be closed during construction and traffic will be detoured.

No salvage.

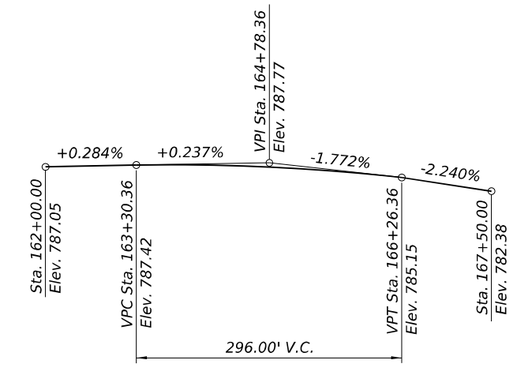

PROFILE GRADE

(Along ℄ IL 40)

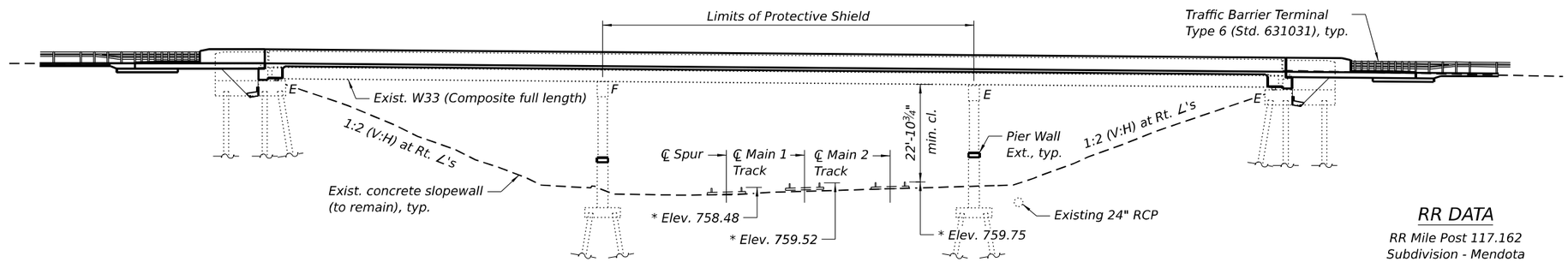

ELEVATION

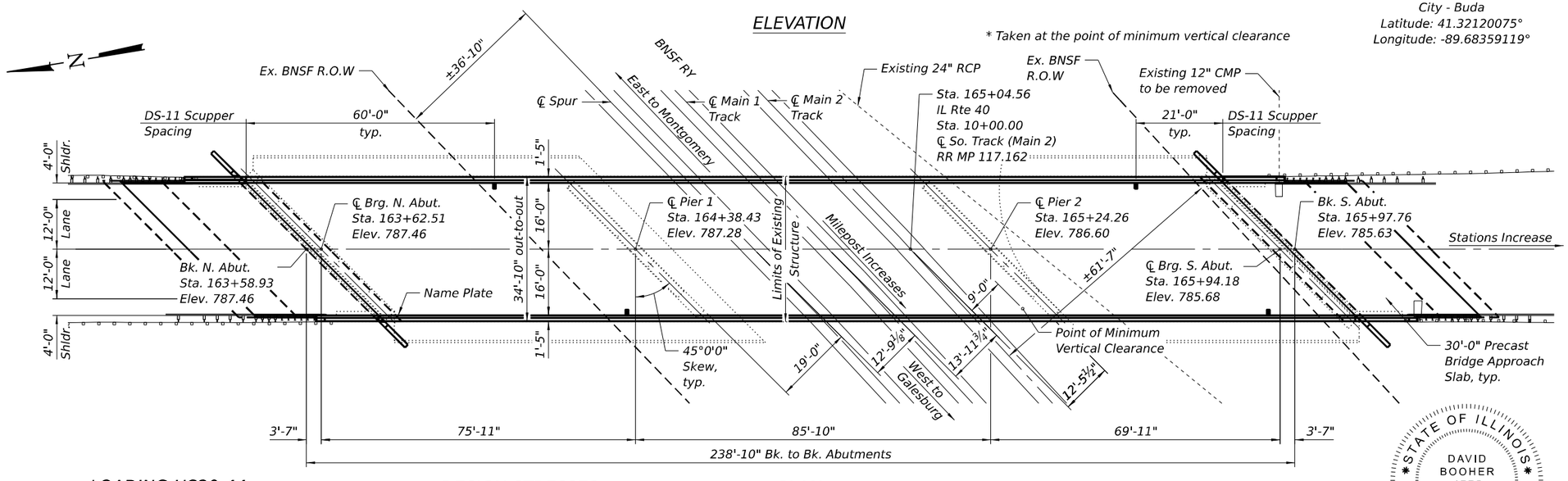

PLAN

* Taken at the point of minimum vertical clearance

RR DATA

RR Mile Post 117.162
Subdivision - Mendota
City - Buda
Latitude: 41.32120075°
Longitude: -89.68359119°

SCOPE OF WORK

1. Remove and replace existing concrete deck and approach slabs. Make new deck composite for full length.
2. Reconfigure existing abutments and wingwalls to semi-integral configuration.
3. Modify existing wingwalls for new bridge approach slabs.
4. Replace existing bearings at abutments.
5. Repair existing substructure units and slopewalls as needed.

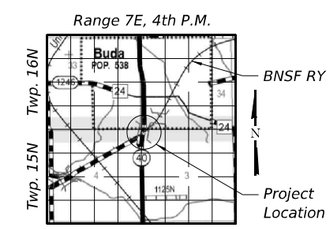

LOCATION SKETCH

LOADING HS20-44

Allow 25 psf for future wearing surface.

DESIGN SPECIFICATIONS

2002 AASHTO Standard Specifications for Highway Bridges, 17th Edition

2006 Seismic Retrofitting Manual for Highway Structures: Part 1 - Bridges (FHWA-HRT-06-032)

DESIGN STRESSES

FIELD UNITS (Exist. Construction)

f 'c = 3,500 psi
fy = 60,000 psi (Reinforcement)
fy = 50,000 psi (Structural Steel, AASHTO M222 Gr. 50W)

FIELD UNITS (New Construction)

f 'c = 4,000 psi (Superstructure)
f 'c = 3,500 psi (Substructure)
fy = 60,000 psi (Reinforcement)

SEISMIC DATA

Seismic Retrofit Category (SRC) = A
Design Spectral Acceleration at 1.0 sec (SD1) = 0.096 g
Design Spectral Acceleration as 0.2 sec (SDS) = 0.152 g
Soil Site Class = D
Performance Level = PL1

APPROVED
For Structural Adequacy Only
Engineer of Bridges & Structures

STATE OF ILLINOIS
DAVID BOOHER
4775
SPRINGFIELD, ILL.
LICENSED STRUCTURAL ENGINEER

1/15/2024
David Booher, Illinois S.E. 081-004775 Date
Expires 11/30/2026

GENERAL PLAN & ELEVATION
IL 40 OVER BNSF RY
F.A.P. 646 - SECTION 122V-BR1
BUREAU COUNTY
STATION 165+04.56
STRUCTURE NO. 006-0138

MODEL: Default
FILE NAME: S:\2022\22IL092 PTB 205 - 24 D3 -Oates - Var PH I & II Projects\WO-5 BR Final Plans IL-40 over BNSF RR 006-0138\CADD\CADD Sheets\0060138-66M48-001-GPE.dgn
1/15/2025 1:41:24 PM

QUIGG ENGINEERING INC

USER NAME = kortega	DESIGNED - KFO	REVISED -	
0060138-66M48-001-GPE.dgn	CHECKED - DRB	REVISED -	
PLOT SCALE = 30.000 ' / in.	DRAWN - JDC	REVISED -	
PLOT DATE =	CHECKED - MDC	REVISED -	

STATE OF ILLINOIS
DEPARTMENT OF TRANSPORTATION

GENERAL PLAN AND ELEVATION
STRUCTURE NO. 006-0138

SHEET 1 OF 26 SHEETS

F.A.P. RTE.	SECTION	COUNTY	TOTAL SHEETS	SHEET NO.
646	122V-BR1	BUREAU		
		CONTRACT NO. 66M48		
	ILLINOIS	FED. AID PROJECT		

GENERAL NOTES

No field welding is permitted except as specified in the contract documents. Reinforcement bars designated (E) shall be epoxy coated.

Prior to pouring the new concrete deck, all heavy or loose rust, loose mill scale, and other loose detrimental foreign material shall be removed from the surfaces in contact with concrete (SSPC – SP3 standards). Tightly adhered paint may remain unless otherwise noted. Removal shall be accomplished by methods that will not damage the steel and the cost will be paid for according to Article 109.04 of the Standard Specifications.

As directed by the Engineer, existing construction accessories welded to the top flange of beams and girders shall be removed. The weld areas shall be ground flush and inspected for cracks using magnetic particle testing (MT) or dye penetrant testing (PT) by qualified personnel approved by the Engineer. Any cracks that cannot be removed by grinding ¼ in. deep shall be identified and reported to the Bureau of Bridges & Structures for further disposition. The cost of removing welded accessories, grinding and inspecting weld areas and grinding cracks will be paid for according to Article 109.04 of the Standard Specifications.

The concrete for bridge decks finished according to Article 503.16(a) of the Standard Specifications shall be placed and compacted parallel to the skew in uniform increments along centerline of bridge. The machine used for finishing shall be set parallel to the skew for striking off and screeding the concrete.

Plan dimensions and details relative to the existing structure have been taken from existing plans are subject to nominal construction variations. The Contactor shall field verify existing dimensions and details affecting new construction and make necessary approved adjustments prior to construction or ordering of materials. Such variations shall not be cause for additional compensation for a change in scope of the work, however, the Contractor will be paid for the quantity actually furnished at the unit price bid for the work.

Existing Name Plate shall be cleaned and relocated next to new Name Plate. Cost included with Name Plates.

The existing structural steel coating contains lead. The Contractor shall take appropriate precautions to address the presence of lead on this project.

All demolition within the Railroad right-of-way and/or demolition that may impact the Railroad tracks or operations shall comply with the Railroad demolition requirements.

The Elevation of the existing top-of-rail profile shall be verified before beginning construction. All discrepancies shall be brought to the attention of the Railroad prior to construction.

The proposed grade separation project shall not change the quantity and/or characteristics of the flow in the Railroad ditches and/or drainage structures.

The contractor must submit a proposed method of erosion and sediment control and have the method approved by the Railroad prior to beginning any grading on the project site.

For Railroad coordination please refer to the Railroad's Coordination Requirements as part of the Specifications or Special Provisions of the project.

All permanent clearances shall be verified before project closeout.

Temporary Construction Clearances, including falsework clearances, shall comply with the Minimum Construction Clearance Envelope shown on this plan sheet.

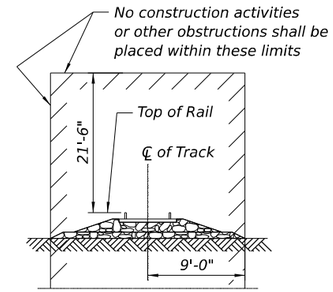

MINIMUM CONSTRUCTION CLEARANCE ENVELOPE

(Normal to Railroad)

INDEX OF SHEETS

TOTAL BILL OF MATERIAL

ITEM	UNIT	SUPER	SUB	TOTAL
Concrete Removal	Cu. Yd.		39.2	39.2
Slope Wall Removal	Sq. Yd.		4	4
Removal of Existing Concrete Deck No. 1	Each	1		1
Protective Shield	Sq. Yd.	336		336
Structure Excavation	Cu. Yd.		227	227
Concrete Structures	Cu. Yd.		46.9	46.9
Concrete Superstructure	Cu. Yd.	329.4		329.4
Bridge Deck Grooving	Sq. Yd.	980		980
Protective Coat	Sq. Yd.	1,301		1,301
Stud Shear Connectors	Each	555		555
Reinforcement Bars, Epoxy Coated	Pound	88,920	8,280	97,200
Name Plates	Each	1		1
Preformed Joint Strip Seal	Foot	92.5		92.5
Elastomeric Bearing Assembly Type I	Each	10		10
Anchor Bolts, 1"	Each	40		40
Granular Backfill for Structures	Cu. Yd.		179	179
Geocomposite Wall Drain	Sq. Yd.		93	93
Pipe Underdrains for Structures 4"	Foot		193	193
Jack and Remove Existing Bearings	Each		10	10
Structural Repair of Concrete (Depth Equal to or Less Than 5 Inches)	Sq. Ft.		57	57
Drainage Scuppers, DS-11	Each	4		4
Slope Wall Repair	Sq. Yd.		39	39
Concrete Wearing Surface, 5"	Sq. Yd.	227		227
Precast Bridge Approach Slab	Sq. Ft.	1,930		1,930
Bar Terminators	Each	116		116

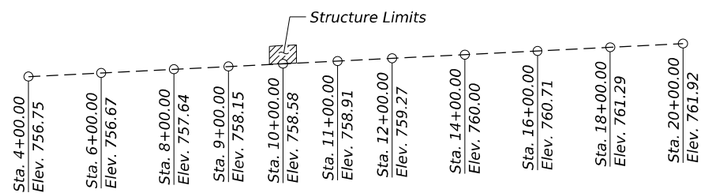

PROFILE GRADE

(Looking North)
(Along South Rail of Spur)

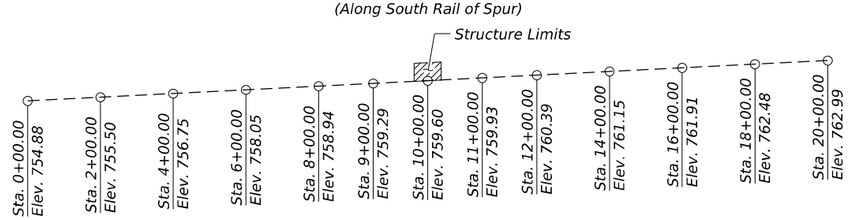

PROFILE GRADE

(Looking North)
(Along South Rail of Main 1 Track)

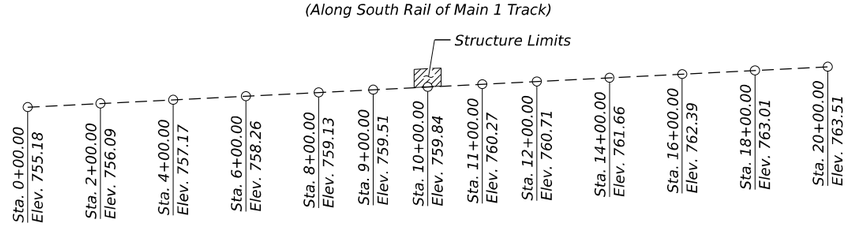

PROFILE GRADE

(Looking North)
(Along South Rail of Main 2 Track)

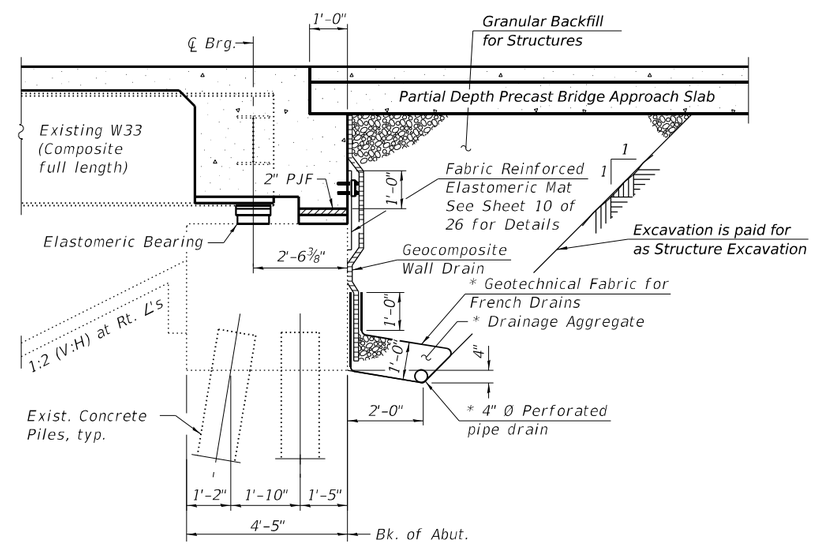

SECTION THRU PROPOSED SEMI-INTEGRAL ABUTMENT

(Horiz. dim. at Rt. ∠'s to Abutment)

* Included in the cost of Pipe Underdrains for Structures.

All drainage system components shall extend to 2'-0" from the end of each wingwall except an outlet pipe shall extend until intersecting with the side slopes. The pipe shall drain into concrete headwalls. (See Article 601.05 of the Standard Specifications and Highway Standard 601101).

STA. 165+04.56
RE-BUILT 20 BY
STATE OF ILLINOIS
F.A.P. RT. 646 SEC. 112V-BR1
LOADING HS20-44
STR. NO. 006-0138

NAME PLATE

See Std. 515001

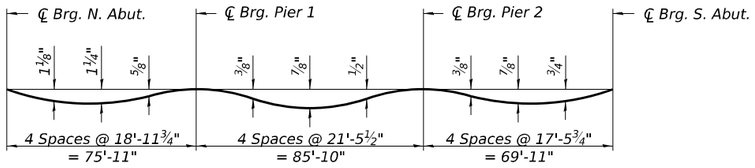

DEAD LOAD DEFLECTION DIAGRAM

(Includes weight of concrete only.)

Note:
The above deflections are not to be used in the field if the engineer is working from the grade elevations adjusted for dead load deflections as shown on sheets 4 through 5 of 26.

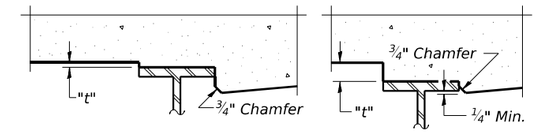

At Minimum Fillet At Maximum Fillet

To determine "t": After all structural steel has been erected, elevations of the top flanges of the beams shall be taken at intervals shown below. These elevations subtracted from the "Theoretical Grade Elevations Adjusted for Dead Load Deflection" shown on sheets 4 through 5 of 26, minus slab thickness, equals the fillet heights "t" above top flange of beams.

FILLET HEIGHTS

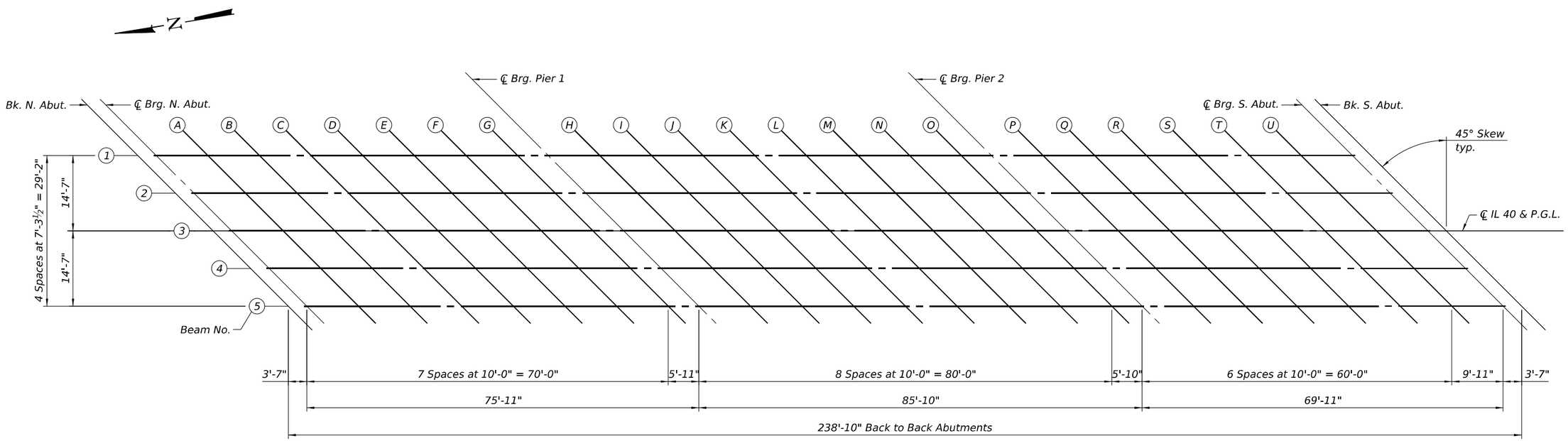

PLAN

MODEL: Default
FILE NAME: S:\2022\22IL092 PTB 205 - 24 D3 -Oates - Var PH I & II Projects\WO-5 BR Final Plans IL-40 over BNSF RR 006-0138\CADD\CADD Sheets\0060138-66M48-003-Top of Slab Elevations.dgn
12/17/2024 10:28:33 AM

QUIGG ENGINEERING INC	USER NAME = kortega	DESIGNED - KFO	REVISED -
	0060138-66M48-003-Top of Slab Elevations.dgn	CHECKED - DRB	REVISED -
	PLOT SCALE = 20.833 ' / in.	DRAWN - JDC	REVISED -
	PLOT DATE =	CHECKED - MDC	REVISED -

STATE OF ILLINOIS
DEPARTMENT OF TRANSPORTATION

TOP OF SLAB ELEVATIONS (1 OF 3)
STRUCTURE NO. 006-0138

SHEET 3 OF 26 SHEETS

F.A.P. RTE.	SECTION	COUNTY	TOTAL SHEETS	SHEET NO.
646	122V-BR1	BUREAU	69	21
		CONTRACT NO. 66M48		
	ILLINOIS	FED. AID PROJECT		

BEAM 1

Location	Station	Offset	Theoretical Grade Elevation	Theoretical Grade Elevations Adjusted for Dead Load Deflections
Bk. North Abut	163+44.35	-14.58	787.21	787.21
℄ Brg. - North Abut.	163+47.93	-14.58	787.22	787.22
A	163+57.93	-14.58	787.23	787.28
B	163+67.93	-14.58	787.23	787.31
C	163+77.93	-14.58	787.22	787.32
D	163+87.93	-14.58	787.21	787.31
E	163+97.93	-14.58	787.19	787.27
F	164+07.93	-14.58	787.17	787.21
G	164+17.93	-14.58	787.14	787.14
℄ Brg. - Pier 1	164+23.84	-14.58	787.11	787.11
H	164+33.84	-14.58	787.07	787.08
I	164+43.84	-14.58	787.02	787.05
J	164+53.84	-14.58	786.96	787.01
K	164+63.84	-14.58	786.90	786.96
L	164+73.84	-14.58	786.83	786.89
M	164+83.84	-14.58	786.75	786.80
N	164+93.84	-14.58	786.67	786.69
O	165+03.84	-14.58	786.58	786.58
℄ Brg. - Pier 2	165+09.68	-14.58	786.52	786.52
P	165+19.68	-14.58	786.42	786.43
Q	165+29.68	-14.58	786.31	786.35
R	165+39.68	-14.58	786.20	786.26
S	165+49.68	-14.58	786.08	786.14
T	165+59.68	-14.58	785.95	786.01
U	165+69.68	-14.58	785.81	785.85
℄ Brg. - South Abut.	165+79.59	-14.58	785.67	785.67
Bk. South Abut.	165+83.18	-14.58	785.62	785.62

BEAM 2

Location	Station	Offset	Theoretical Grade Elevation	Theoretical Grade Elevations Adjusted for Dead Load Deflections
Bk. North Abut	163+51.64	-7.29	787.35	787.35
℄ Brg. - North Abut.	163+55.22	-7.29	787.35	787.35
A	163+65.22	-7.29	787.35	787.40
B	163+75.22	-7.29	787.35	787.44
C	163+85.22	-7.29	787.34	787.45
D	163+95.22	-7.29	787.32	787.43
E	164+05.22	-7.29	787.30	787.38
F	164+15.22	-7.29	787.27	787.31
G	164+25.22	-7.29	787.23	787.24
℄ Brg. - Pier 1	164+31.14	-7.29	787.20	787.20
H	164+41.14	-7.29	787.16	787.16
I	164+51.14	-7.29	787.10	787.13
J	164+61.14	-7.29	787.04	787.10
K	164+71.14	-7.29	786.97	787.04
L	164+81.14	-7.29	786.90	786.96
M	164+91.14	-7.29	786.81	786.86
N	165+01.14	-7.29	786.73	786.75
O	165+11.14	-7.29	786.63	786.63
℄ Brg. - Pier 2	165+16.97	-7.29	786.57	786.57
P	165+26.97	-7.29	786.46	786.48
Q	165+36.97	-7.29	786.35	786.39
R	165+46.97	-7.29	786.23	786.30
S	165+56.97	-7.29	786.11	786.18
T	165+66.97	-7.29	785.97	786.04
U	165+76.97	-7.29	785.83	785.87
℄ Brg. - South Abut.	165+86.89	-7.29	785.69	785.69
Bk. South Abut.	165+90.47	-7.29	785.63	785.63

BEAM 3, ℄ IL 40 & P.G.L.

Location	Station	Offset	Theoretical Grade Elevation	Theoretical Grade Elevations Adjusted for Dead Load Deflections
Bk. North Abut	163+58.93	0.00	787.46	787.46
℄ Brg. - North Abut.	163+62.51	0.00	787.46	787.46
A	163+72.51	0.00	787.46	787.51
B	163+82.51	0.00	787.45	787.54
C	163+92.51	0.00	787.44	787.55
D	164+02.51	0.00	787.41	787.52
E	164+12.51	0.00	787.39	787.47
F	164+22.51	0.00	787.35	787.39
G	164+32.51	0.00	787.31	787.32
℄ Brg. - Pier 1	164+38.43	0.00	787.28	787.28
H	164+48.43	0.00	787.23	787.23
I	164+58.43	0.00	787.17	787.20
J	164+68.43	0.00	787.10	787.16
K	164+78.43	0.00	787.03	787.10
L	164+88.43	0.00	786.95	787.01
M	164+98.43	0.00	786.86	786.91
N	165+08.43	0.00	786.77	786.79
O	165+18.43	0.00	786.67	786.67
℄ Brg. - Pier 2	165+24.26	0.00	786.60	786.60
P	165+34.26	0.00	786.49	786.51
Q	165+44.26	0.00	786.37	786.42
R	165+54.26	0.00	786.25	786.31
S	165+64.26	0.00	786.12	786.19
T	165+74.26	0.00	785.98	786.04
U	165+84.26	0.00	785.83	785.87
℄ Brg. - South Abut.	165+94.18	0.00	785.68	785.68
Bk. South Abut.	165+97.76	0.00	785.63	785.63

Notes:
Stations are measured along ℄ IL 40.
Offsets are measured from P.G.L.

BEAM 4

Location	Station	Offset	Theoretical Grade Elevation	Theoretical Grade Elevations Adjusted for Dead Load Deflections
Bk. North Abut	163+66.22	7.29	787.35	787.35
℄ Brg. - North Abut.	163+69.80	7.29	787.35	787.35
A	163+79.80	7.29	787.34	787.40
B	163+89.80	7.29	787.33	787.42
C	163+99.80	7.29	787.31	787.42
D	164+09.80	7.29	787.28	787.39
E	164+19.80	7.29	787.25	787.33
F	164+29.80	7.29	787.21	787.25
G	164+39.80	7.29	787.16	787.17
℄ Brg. - Pier 1	164+45.72	7.29	787.13	787.13
H	164+55.72	7.29	787.07	787.08
I	164+65.72	7.29	787.01	787.04
J	164+75.72	7.29	786.94	786.99
K	164+85.72	7.29	786.86	786.93
L	164+95.72	7.29	786.77	786.84
M	165+05.72	7.29	786.68	786.73
N	165+15.72	7.29	786.58	786.61
O	165+25.72	7.29	786.48	786.48
℄ Brg. - Pier 2	165+31.55	7.29	786.41	786.41
P	165+41.55	7.29	786.30	786.31
Q	165+51.55	7.29	786.17	786.22
R	165+61.55	7.29	786.04	786.11
S	165+71.55	7.29	785.91	785.98
T	165+81.55	7.29	785.76	785.83
U	165+91.55	7.29	785.61	785.65
℄ Brg. - South Abut.	166+01.47	7.29	785.46	785.46
Bk. South Abut.	166+05.05	7.29	785.40	785.40

BEAM 5

Location	Station	Offset	Theoretical Grade Elevation	Theoretical Grade Elevations Adjusted for Dead Load Deflections
Bk. North Abut	163+73.51	14.58	787.23	787.23
℄ Brg. - North Abut.	163+77.09	14.58	787.22	787.22
A	163+87.09	14.58	787.21	787.26
B	163+97.09	14.58	787.20	787.28
C	164+07.09	14.58	787.17	787.27
D	164+17.09	14.58	787.14	787.23
E	164+27.09	14.58	787.10	787.17
F	164+37.09	14.58	787.05	787.09
G	164+47.09	14.58	787.00	787.01
℄ Brg. - Pier 1	164+53.01	14.58	786.97	786.97
H	164+63.01	14.58	786.91	786.91
I	164+73.01	14.58	786.84	786.86
J	164+83.01	14.58	786.76	786.81
K	164+93.01	14.58	786.68	786.74
L	165+03.01	14.58	786.59	786.65
M	165+13.01	14.58	786.49	786.53
N	165+23.01	14.58	786.39	786.41
O	165+33.01	14.58	786.27	786.28
℄ Brg. - Pier 2	165+38.84	14.58	786.21	786.21
P	165+48.84	14.58	786.09	786.10
Q	165+58.84	14.58	785.96	786.00
R	165+68.84	14.58	785.82	785.88
S	165+78.84	14.58	785.68	785.75
T	165+88.84	14.58	785.53	785.59
U	165+98.84	14.58	785.38	785.41
℄ Brg. - South Abut.	166+08.76	14.58	785.22	785.22
Bk. South Abut.	166+12.34	14.58	785.16	785.16

Notes:
Stations are measured along ℄ IL 40.
Offsets are measured from P.G.L.

EAST EDGE OF SHOULDER

Location	Station	Offset	Theoretical Grade Elevations
N. End of N. Appr. Slab	163+14.34	-16.00	787.11
A1	163+24.34	-16.00	787.14
A2	163+34.34	-16.00	787.17
S. End of N. Appr. Slab	163+44.34	-16.00	787.19

EAST EDGE OF PAVEMENT

Location	Station	Offset	Theoretical Grade Elevations
N. End of N. Appr. Slab	163+18.34	-12.00	787.21
A1	163+28.34	-12.00	787.23
A2	163+38.34	-12.00	787.26
S. End of N. Appr. Slab	163+48.34	-12.00	787.27

℄ IL 40 & P.G.L.

Location	Station	Offset	Theoretical Grade Elevations
N. End of N. Appr. Slab	163+30.34	0.00	787.42
A1	163+40.34	0.00	787.44
A2	163+50.34	0.00	787.45
S. End of N. Appr. Slab	163+60.34	0.00	787.46

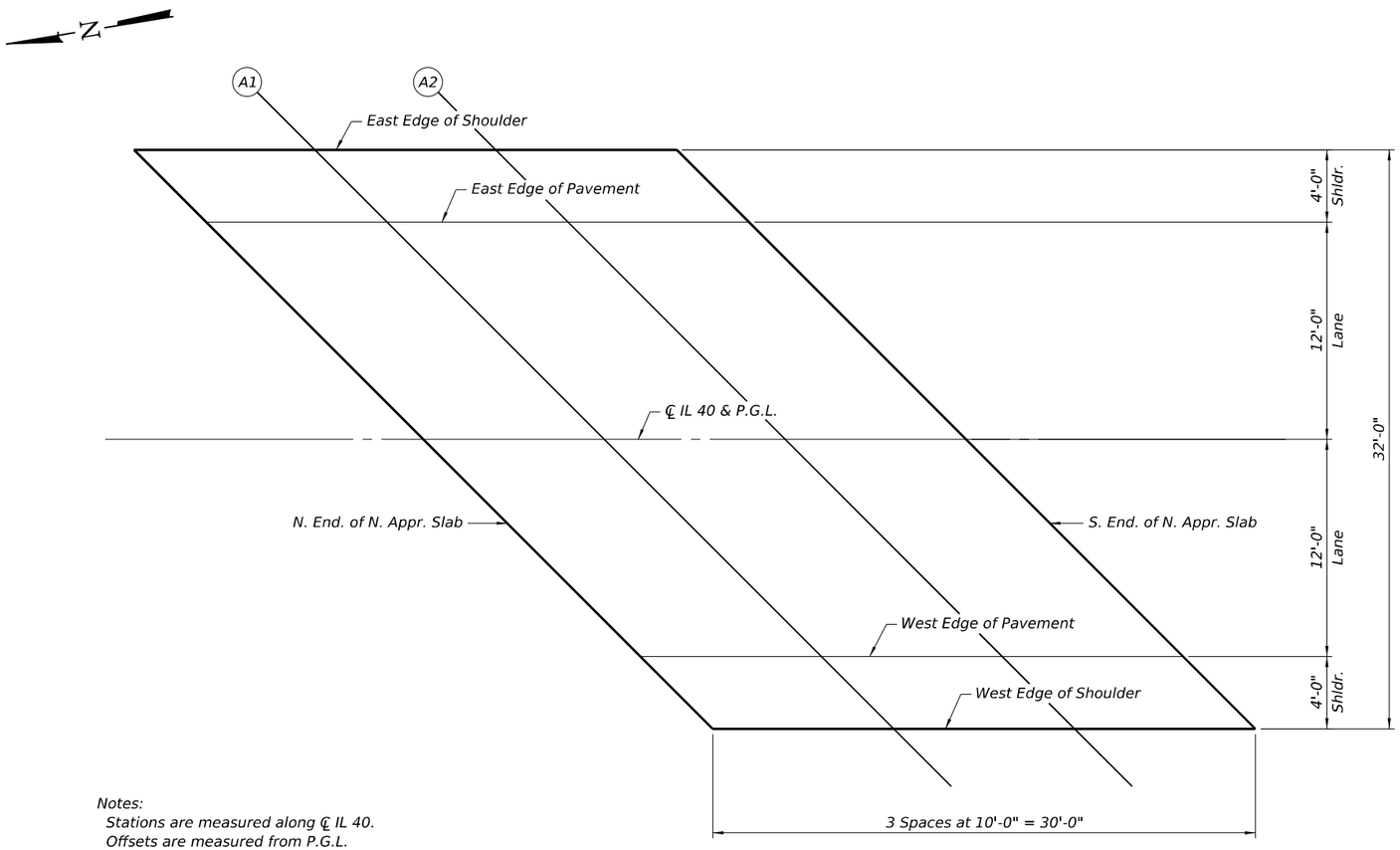

Notes:
Stations are measured along ℄ IL 40.
Offsets are measured from P.G.L.

PLAN

WEST EDGE OF PAVEMENT

Location	Station	Offset	Theoretical Grade Elevations
N. End of N. Appr. Slab	163+42.34	12.00	787.26
A1	163+52.34	12.00	787.28
A2	163+62.34	12.00	787.28
S. End of N. Appr. Slab	163+72.34	12.00	787.28

WEST EDGE OF SHOULDER

Location	Station	Offset	Theoretical Grade Elevations
N. End of N. Appr. Slab	163+46.34	16.00	787.19
A1	163+56.34	16.00	787.20
A2	163+66.34	16.00	787.20
S. End of N. Appr. Slab	163+76.34	16.00	787.20

EAST EDGE OF SHOULDER

Location	Station	Offset	Theoretical Grade Elevations
N. End of S. Appr. Slab	165+80.35	-16.00	785.63
A3	165+90.35	-16.00	785.48
A4	166+00.35	-16.00	785.33
S. End of S. Appr. Slab	166+10.35	-16.00	785.16

EAST EDGE OF PAVEMENT

Location	Station	Offset	Theoretical Grade Elevations
N. End of S. Appr. Slab	165+84.35	-12.00	785.65
A3	165+94.35	-12.00	785.50
A4	166+04.35	-12.00	785.34
S. End of S. Appr. Slab	166+14.35	-12.00	785.18

℄ IL 40 & P.G.L.

Location	Station	Offset	Theoretical Grade Elevations
N. End of S. Appr. Slab	165+96.35	0.00	785.65
A3	166+06.35	0.00	785.49
A4	166+16.35	0.00	785.32
S. End of S. Appr. Slab	166+26.35	0.00	785.15

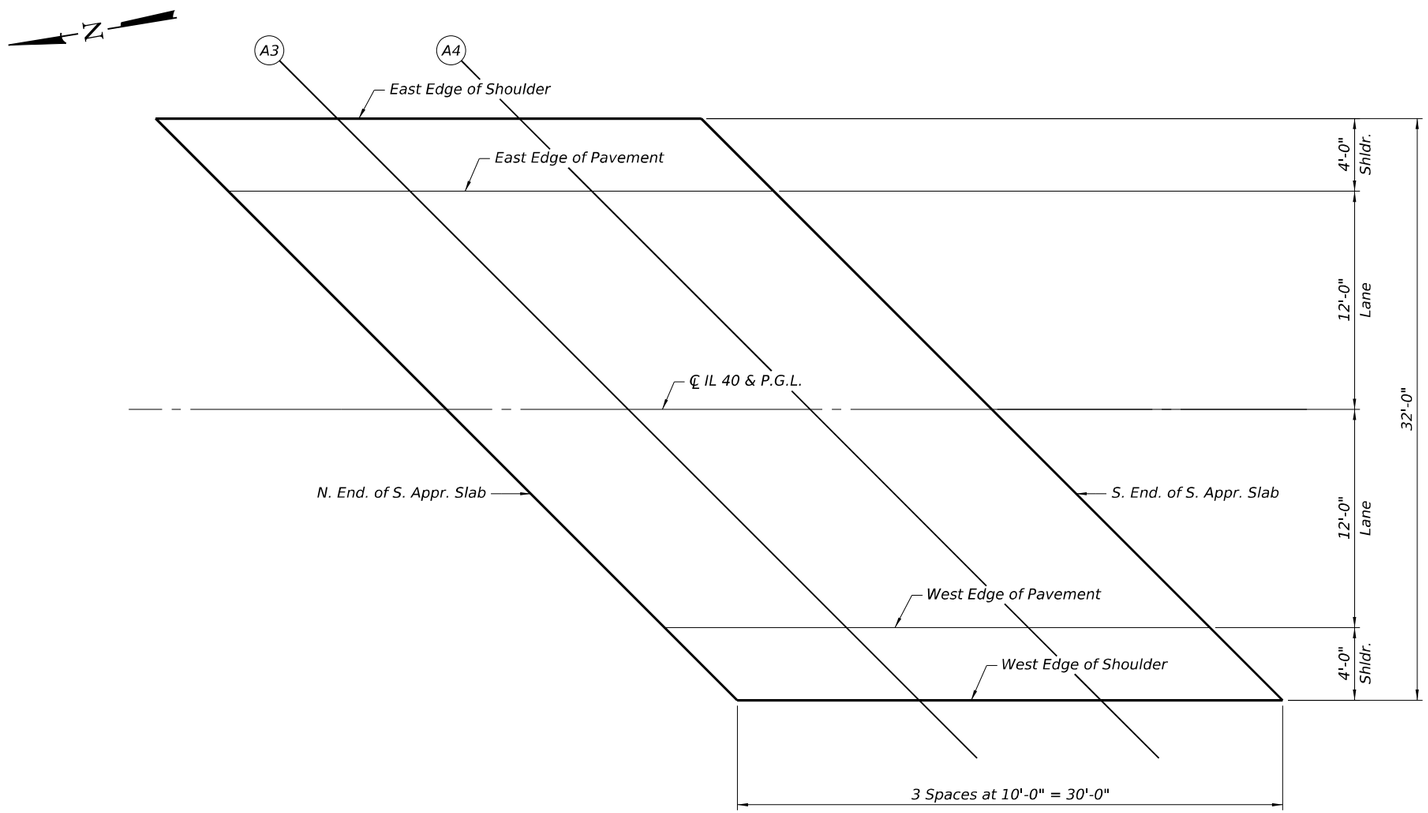

Notes:
Stations are measured along ℄ IL 40.
Offsets are measured from P.G.L.

PLAN

WEST EDGE OF PAVEMENT

Location	Station	Offset	Theoretical Grade Elevations
N. End of S. Appr. Slab	166+08.35	12.00	785.28
A3	166+18.35	12.00	785.11
A4	166+28.35	12.00	784.93
S. End of S. Appr. Slab	166+38.35	12.00	784.70

WEST EDGE OF SHOULDER

Location	Station	Offset	Theoretical Grade Elevations
N. End of S. Appr. Slab	166+12.35	16.00	785.13
A3	166+22.35	16.00	784.96
A4	166+32.35	16.00	784.76
S. End of S. Appr. Slab	166+42.35	16.00	784.53

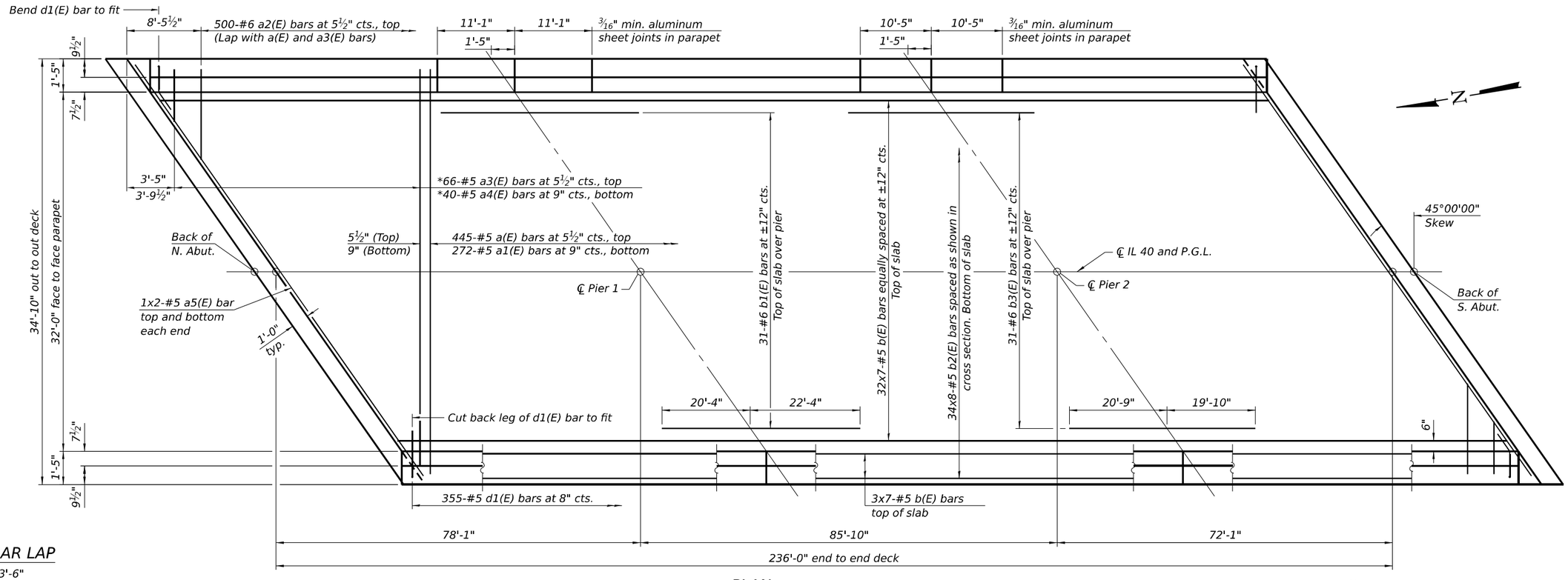

PLAN

MINIMUM BAR LAP

#5 bar = 3'-6"

* See Field Cutting Diagram on sheet 9 of 26.

Notes:
See sheet 9 & 10 of 26 for superstructure details and Bill of Material.
Bars indicated thus 20 x 3-#5 etc. indicates 20 lines of bars with 3 lengths per line.
See sheet 1 of 26 for drain locations.

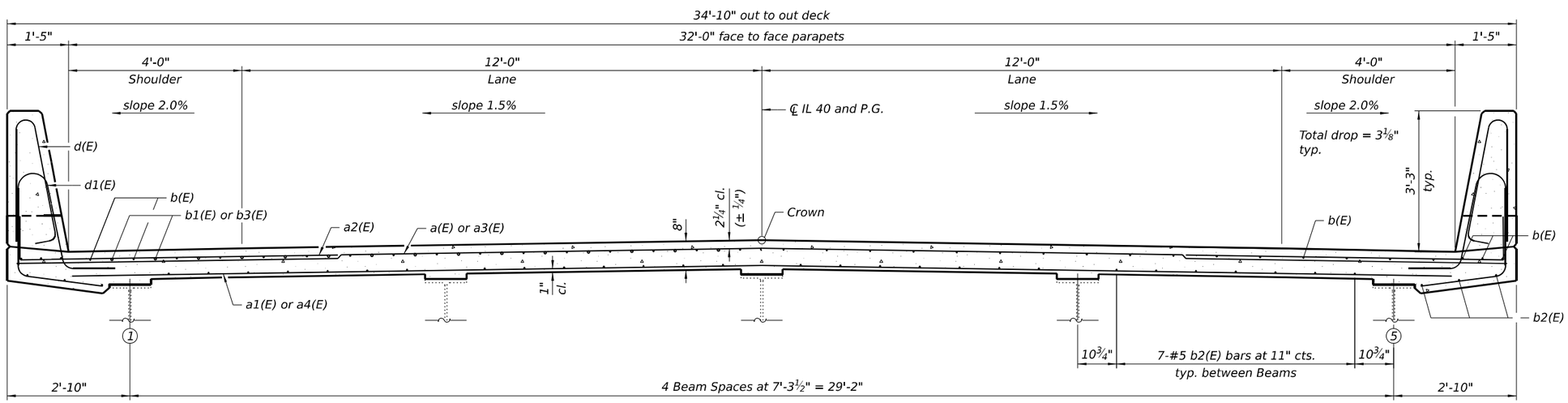

NEAR PIER

CROSS SECTION

(Looking South)

NEAR MIDSPAN

QUIGG ENGINEERING INC	USER NAME = kortega	DESIGNED - KFO	REVISED -	STATE OF ILLINOIS DEPARTMENT OF TRANSPORTATION	SUPERSTRUCTURE STRUCTURE NO. 006-0138	F.A.P. RTE.	SECTION	COUNTY	TOTAL SHEETS / SHEET NO.
	0060138-66M48-008-Superstructure.dgn	CHECKED - DRB	REVISED -			646	122V-BR1	BUREAU	69 / 26
	PLOT SCALE = 2.833 ' / in.	DRAWN - JDC	REVISED -					CONTRACT NO. 66M48	
	PLOT DATE =	CHECKED - MDC	REVISED -		SHEET 8 OF 26 SHEETS		ILLINOIS	FED. AID PROJECT	

MODEL: Default
FILE NAME: S:\2022\22IL092 PTB 205 - 24 D3 -Oates - Var PH I & II Projects\WO-5 BR Final Plans IL-40 over BNSF RR 006-0138\CADD\CADD Sheets\0060138-66M48-008-Superstructure.dgn
12/17/2024 10:28:37 AM

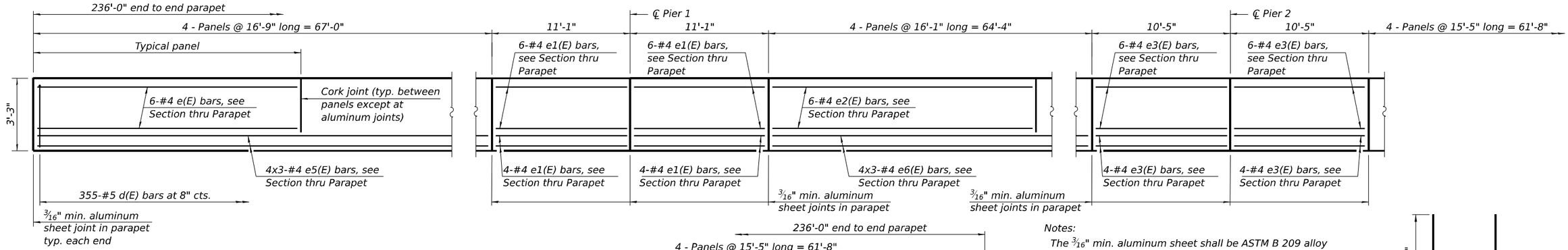

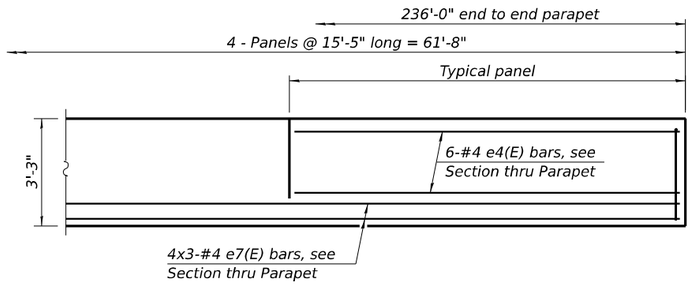

INSIDE ELEVATION OF PARAPET

Notes:
The 3/16" min. aluminum sheet shall be ASTM B 209 alloy 3003-H14 and coated with 5 mils of either bitumen paint or epoxy paint to minimize reaction with wet concrete. Cost included with Concrete Superstructure.
The polyurethane sealant shall be according to Article 1050.04 of the Std. Spec. and the color shall be gray.
Bar terminators, paid for separately. See Total Bill of Material.

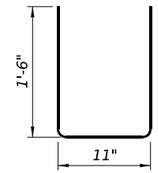

BAR u10(E)

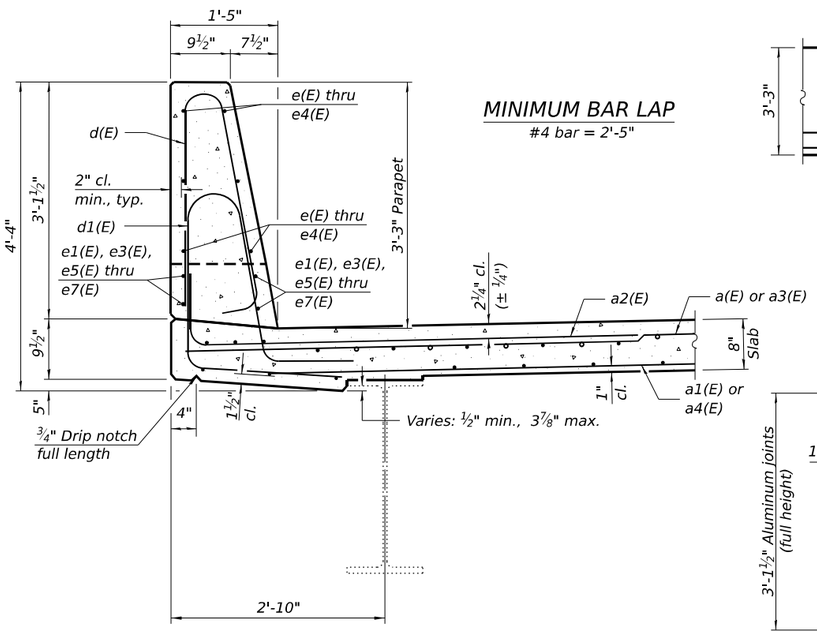

MINIMUM BAR LAP
#4 bar = 2'-5"

SECTION THRU PARAPET

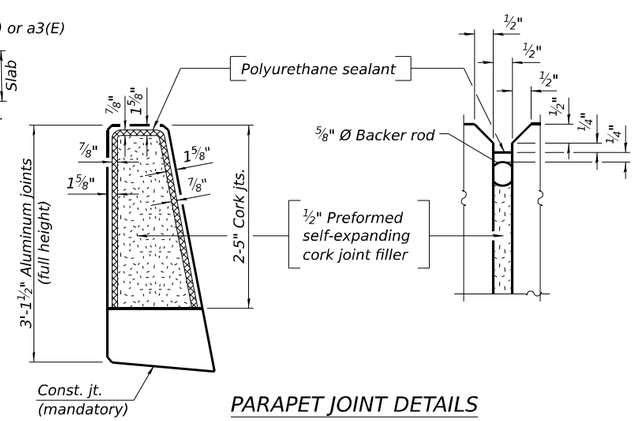

PARAPET JOINT DETAILS

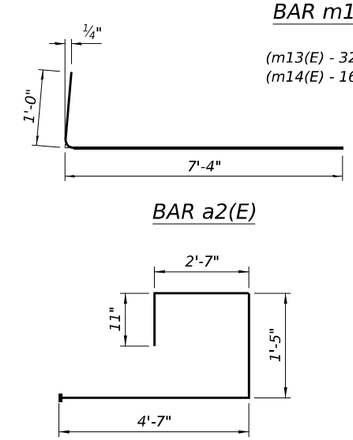

BAR a2(E)

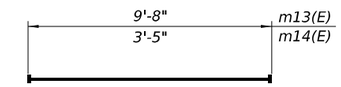

BAR m13(E) & m14(E)
(Headed)
(m13(E) - 32-#6 Bar Terminators)
(m14(E) - 16-#6 Bar Terminators)

SUPERSTRUCTURE BILL OF MATERIAL

Bar	No.	Size	Length	Shape
a(E)	445	#5	34'-6"	
a1(E)	272	#5	33'-6"	
a2(E)	1,000	#6	8'-4"	
a3(E)	66	#5	35'-9"	
a4(E)	40	#5	35'-11"	
a5(E)	8	#5	26'-3"	
a6(E)	32	#5	1'-6"	
b(E)	266	#5	36'-9"	
b1(E)	31	#6	42'-8"	
b2(E)	272	#5	32'-7"	
b3(E)	31	#6	40'-7"	
d(E)	710	#5	6'-5"	
d1(E)	710	#5	8'-1"	
e(E)	48	#4	16'-5"	
e1(E)	40	#4	10'-9"	
e2(E)	48	#4	15'-9"	
e3(E)	40	#4	10'-1"	
e4(E)	48	#4	15'-1"	
e5(E)	24	#4	23'-11"	
e6(E)	24	#4	23'-0"	
e7(E)	24	#4	22'-1"	
m10(E)	40	#6	26'-6"	
m11(E)	16	#6	9'-10"	
m12(E)	8	#6	3'-5"	
m13(E)	16	#6	9'-8"	
m14(E)	8	#6	3'-5"	
m15(E)	8	#4	25'-10"	
s10(E)	68	#5	9'-6"	
s11(E)	68	#5	10'-3"	
u10(E)	70	#4	3'-11"	
Reinforcement Bars, Epoxy Coated			Lbs.	83,360
Concrete Superstructure			Cu. Yds.	321.6

Bars indicated thus 1 x 2-#4 etc. indicates 1 line of bars with 2 lengths per line.

BAR s10(E)
(Headed. 68-#5 Bar terminators)

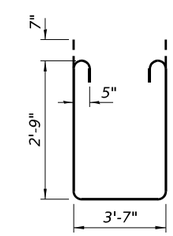

BAR s11(E)

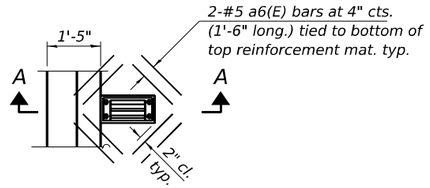

PLAN AT DS-11 SCUPPER

Note:
Cut longitudinal reinforcement to clear drainage scuppers.

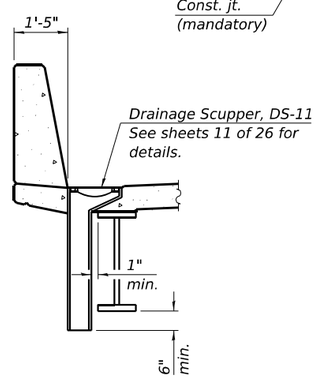

SECTION A-A

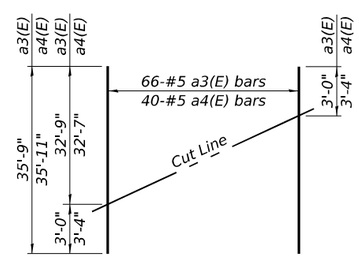

FIELD CUTTING DIAGRAM
Order a3(E) and a4(E) bars full length. Cut as shown and use remainder of bars in opposite end of deck.

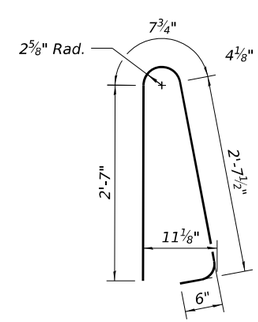

BAR d(E)

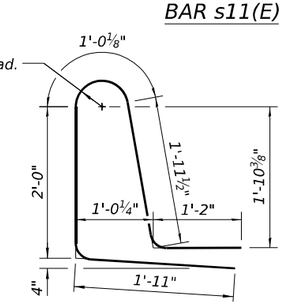

BAR d1(E)

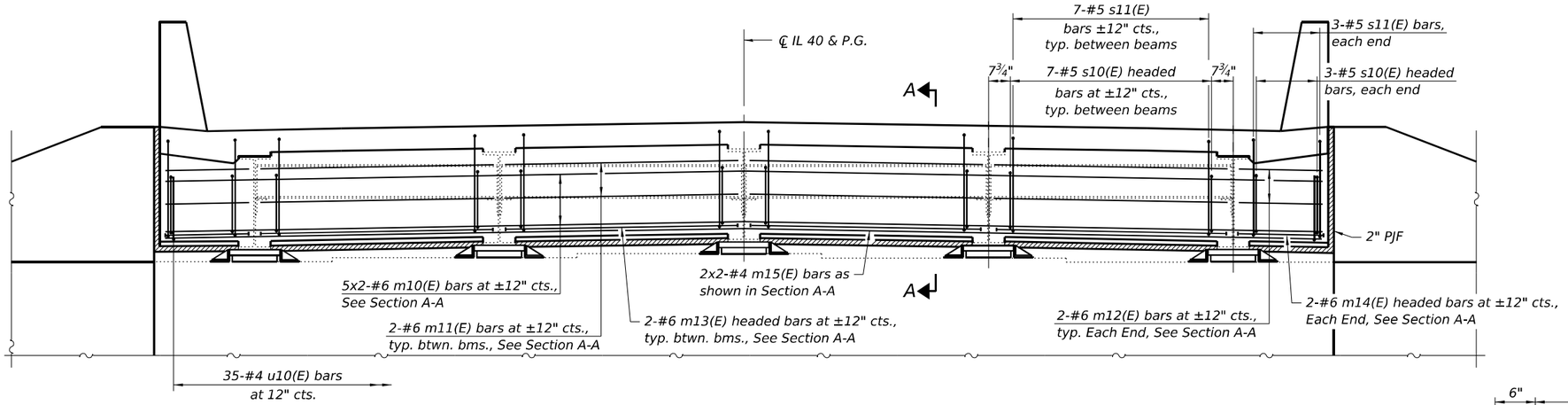

DIAPHRAGM AT ABUTMENT

MINIMUM BAR LAP

#4 bar = 2'-8"
#6 bar = 4'-0"

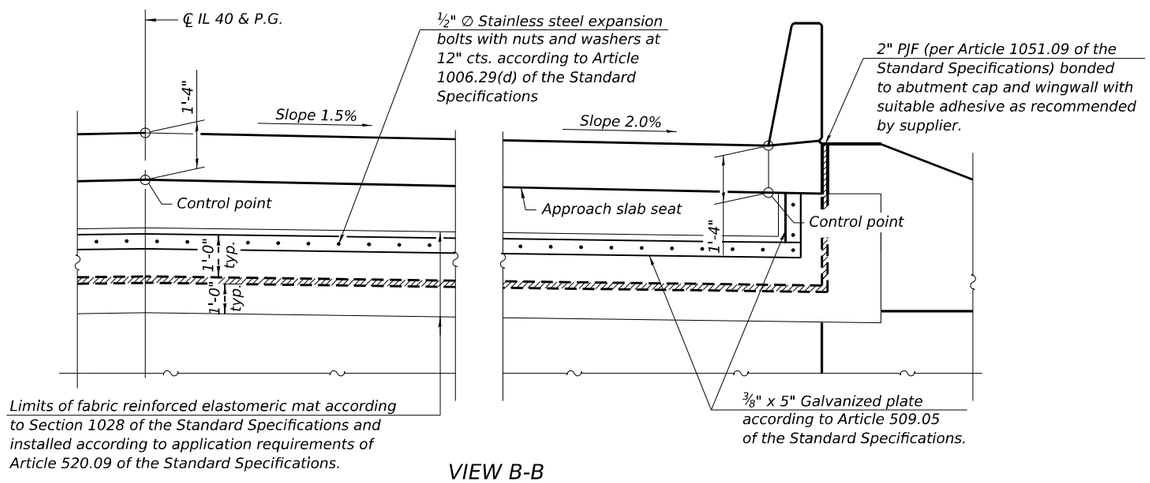

VIEW B-B

(Showing 2" PJF and limits of Fabric Reinforced Elastomeric Mat.
See Section Thru Proposed Semi-Integral Abutment on Sheet 2 of 26).

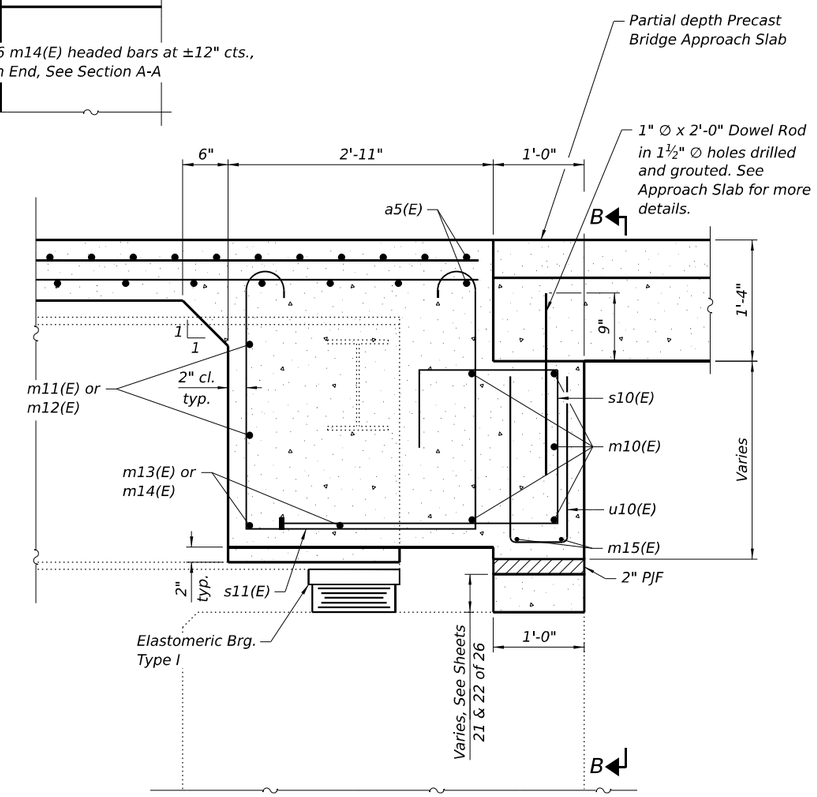

SECTION A-A

(at Rt. ∠'s)

Notes:

See sheet 9 of 26 for superstructure details and bill of material.

The s10(E), s11(E), and u10(E) bars shall be placed parallel to the beams. Spacing for these bars shall be at right angles to the beams.

The approach slab seat shall have a constant slope determined from the control points shown.

Cost of fabric reinforced elastomeric mat, galvanized plate, stainless steel expansion bolts with nuts and washers and installation are included in the cost of Concrete Superstructure.

Bars indicated thus 20 x 3-#5 etc. indicates 20 lines of bars with 3 lengths per line.

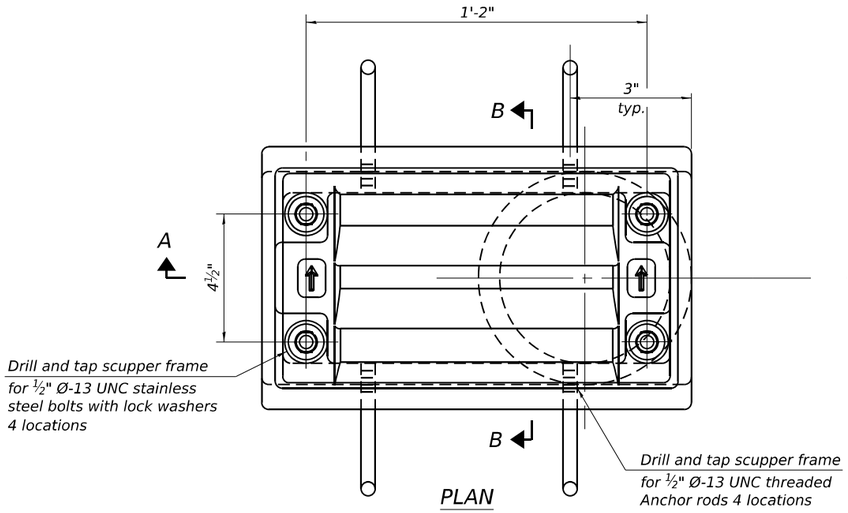

PLAN

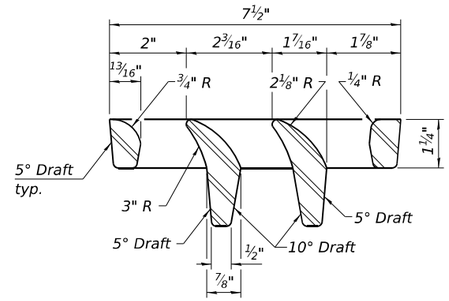

VANE GRATE DETAIL

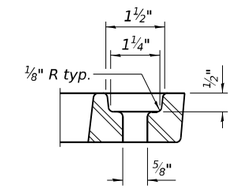

GRATE BOLT HOLE DETAIL

Notes:

All cast iron parts shall be gray iron conforming to the requirements of AASHTO M105, Class 35B and AASHTO M306.

Bolts, anchor rods, nuts and washers shall be according to ASTM A307 and shall be galvanized according to AASHTO M232. As an alternate stainless steel may be used.

Stainless steel hardware shall be according to Article 1006.29(d) of the Standard Specifications.

Structural steel weldments of equal sections and of the same configuration may be substituted for the cast iron scupper frames and downspouts; however, the scupper grates shall remain cast iron. Fillet or full penetration welds shall be used for the weldments. Details shall be submitted to the Engineer for approval.

Structural steel scupper frames and downspouts, when utilized, shall be galvanized according to AASHTO M111.

As an alternate, fiberglass may be used for downspouts according to ASTM D2996 with a short-time rupture strength hoop tensile stress of 30,000 psi min. in lieu of the cast iron or structural steel.

Exterior surfaces of downspouts and exterior exposed surfaces of the scupper frame below deck shall be pigmented or painted to match the color of the adjacent beam.

The Contractor shall take appropriate measures to assure that Protective Coat is not applied to the scupper.

Cost of the grate, frame, downspout, anchor rods, nuts and washers including complete installation of the scupper shall be paid for at the contract unit price for Drainage Scuppers, DS-11.

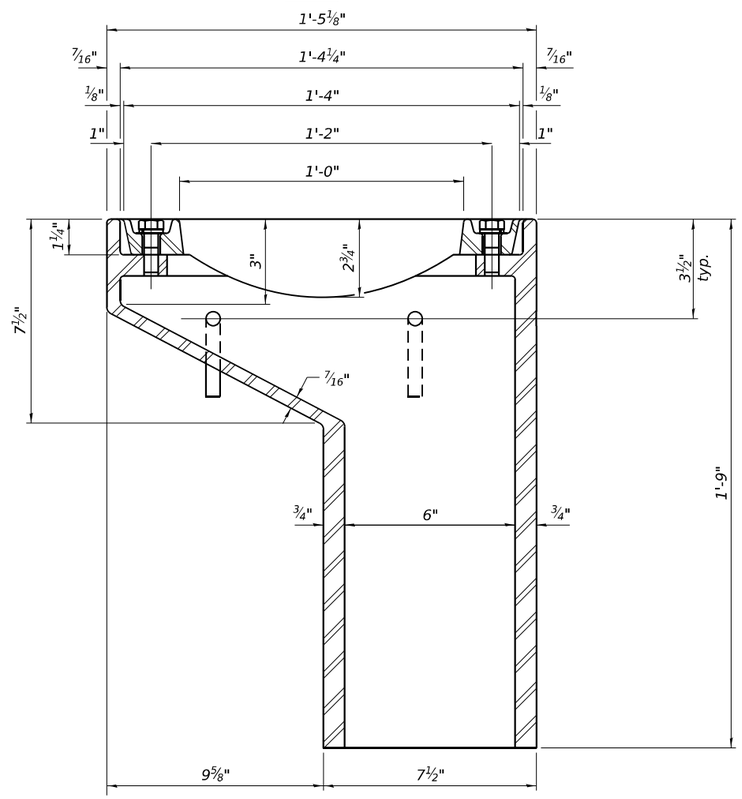

SECTION A-A

See sheet 9 of 26 for scupper location relative to parapet.
See sheet 1 of 26 for scupper layout.

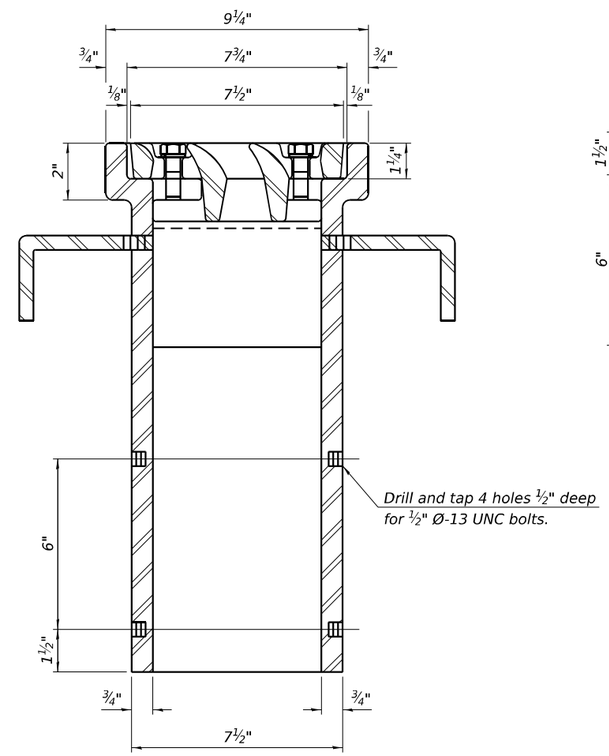

SECTION B-B

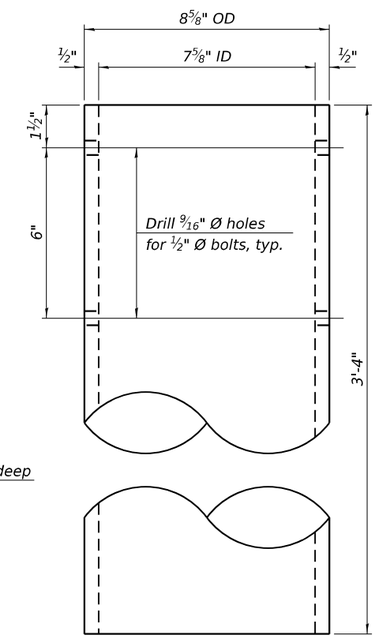

DOWNSPOUT

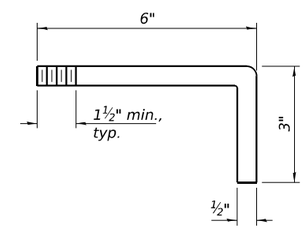

ANCHOR ROD DETAIL

BILL OF MATERIAL

ITEM	UNIT	QUANTITY
Drainage Scuppers, DS-11	Each	4

DS-11 5-15-2023

QUIGG ENGINEERING INC

USER NAME = kortega	DESIGNED - KFO	REVISED -	STATE OF ILLINOIS DEPARTMENT OF TRANSPORTATION	DRAINAGE SCUPPER, DS-11 STRUCTURE NO. 006-0138	F.A.P. RTE. 646 / SECTION 122V-BR1 / COUNTY / TOTAL SHEETS 69 / SHEET NO. 29
0060138-66M48-011-Drainage Scupper.dgn	CHECKED - DRB	REVISED -			BUREAU
PLOT SCALE = 0.167 ' / in.	DRAWN - JDC	REVISED -		SHEET 11 OF 26 SHEETS	CONTRACT NO. 66M48
PLOT DATE =	CHECKED - MDC	REVISED -			ILLINOIS FED. AID PROJECT

MODEL: Default
FILE NAME: S:\2022\22IL092 PTB 205 - 24 D3 -Oates - Var PH I & II Projects\WO-5 BR Final Plans IL-40 over BNSF RR 006-0138\CADD\CADD Sheets\0060138-66M48-011-Drainage Scupper.dgn
12/17/2024 10:28:40 AM

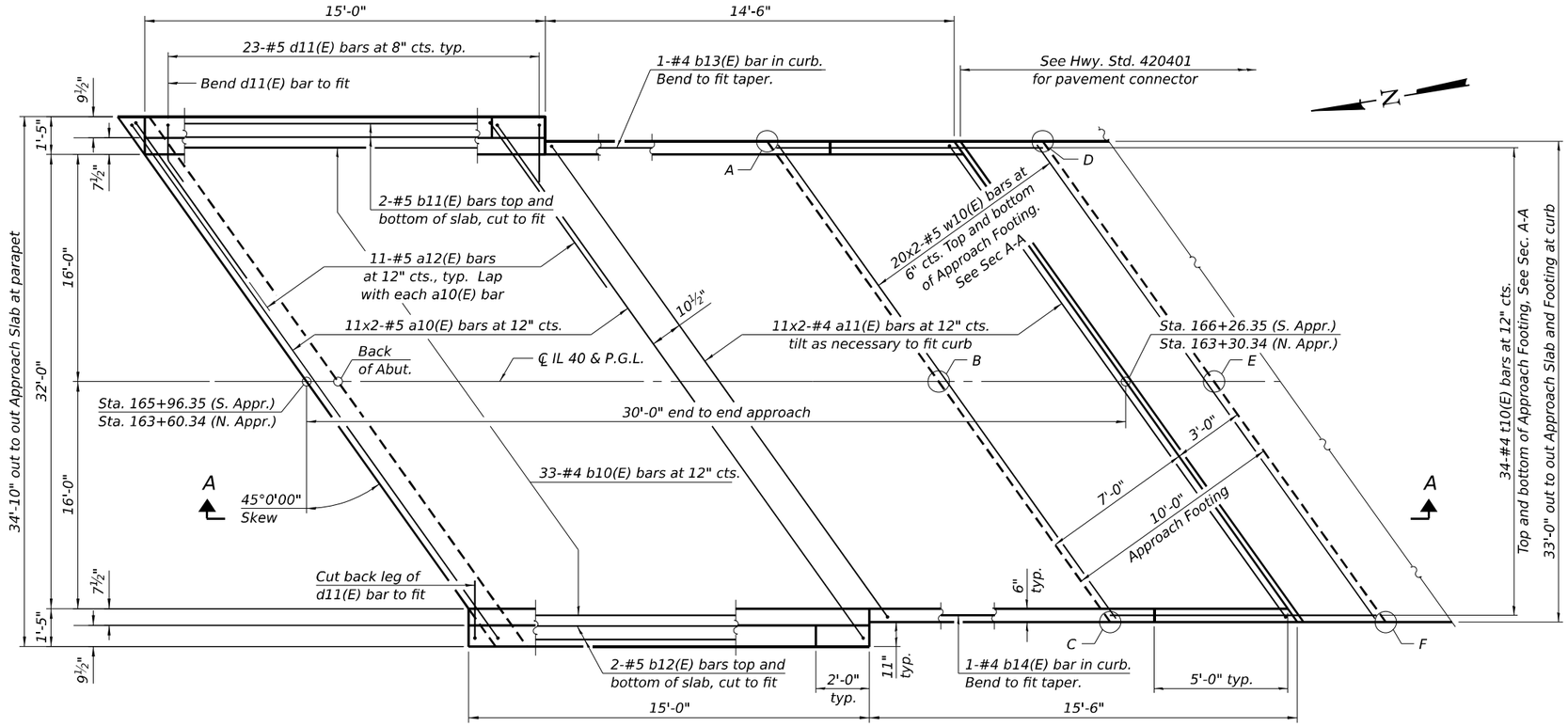

PLAN

(South approach slab shown; North approach slab similar by 180° rotation)

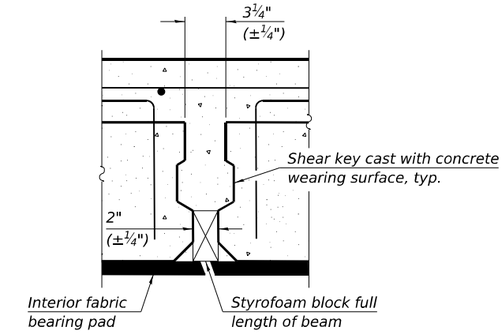

DETAIL 'A'

TOP AND BOTTOM ELEVATIONS FOR APPROACH FOOTING

North Approach			South Approach		
Point/ Location	Top	Bottom	Point/ Location	Top	Bottom
A - SE	785.76	784.92	A - NE	783.95	783.11
B - ℄	786.07	785.23	B - ℄	783.95	783.11
C - SW	785.81	784.98	C - NW	783.36	782.52
D - NE	785.72	784.88	D - SE	783.72	782.88
E - ℄	786.03	785.20	E - ℄	783.68	782.85
F - NW	785.80	784.97	F - SW	783.04	782.21

* Fabric bearing pads at the expansion end shall be recessed ¼" into the approach footing and bonded. Adjusting shims, when required, shall be bonded to the top of the fabric bearing pads.

MINIMUM BAR LAP

#4 bar = 2'-5"
#5 bar = 3'-0"

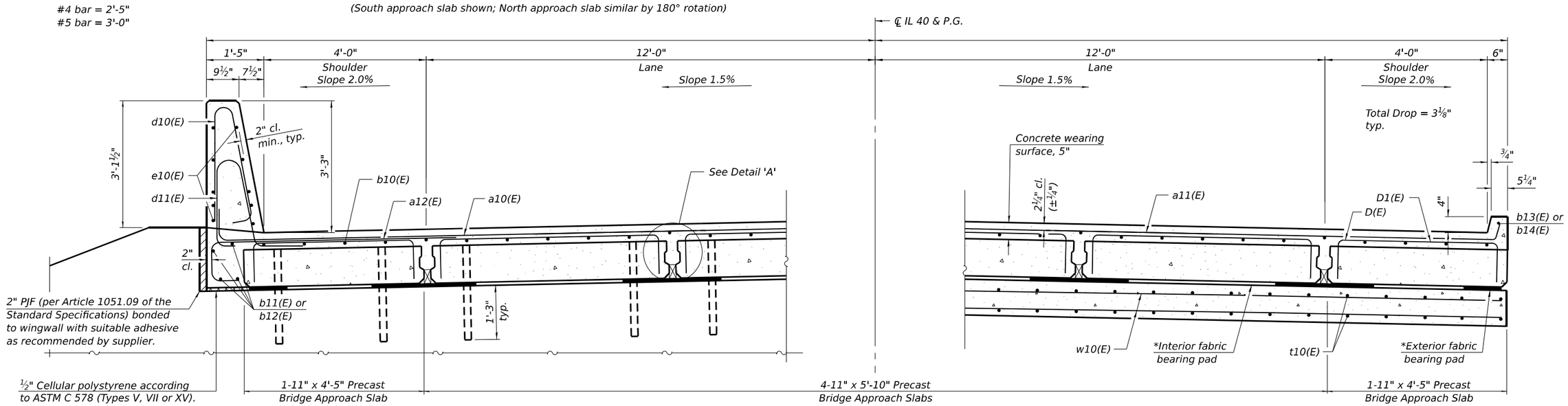

NEAR ABUTMENT

AT APPROACH FOOTING

CROSS SECTION

(Looking South)

BA-PDP-39CS-R(>30°) 03-08-2024 (Beams: 36" min. width; 72" max. width)

(Sheet 1 of 3)

QUIGG ENGINEERING INC

USER NAME = kortega	DESIGNED - KFO	REVISED -	
0060138-66M48-012-Approach Details 1.dgn	CHECKED - DRB	REVISED -	
PLOT SCALE = 0.167 ' / in.	DRAWN - JDC	REVISED -	
PLOT DATE =	CHECKED - MDC	REVISED -	

STATE OF ILLINOIS
DEPARTMENT OF TRANSPORTATION

PARTIAL DEPTH PRECAST BRIDGE APPROACH SLAB
STRUCTURE NO. 006-0138

SHEET 12 OF 26 SHEETS

F.A.P. RTE.	SECTION	COUNTY	TOTAL SHEETS	SHEET NO.
646	122V-BR1	BUREAU	69	30
		CONTRACT NO. 66M48		
		ILLINOIS	FED. AID PROJECT	

MODEL: Default
FILE NAME: S:\2022\22IL092 PTB 205 - 24 D3 -Oates - Var PH I & II Projects\WO-5 BR Final Plans IL-40 over BNSF RR 006-0138\CADD\CADD Sheets\0060138-66M48-012-Approach Details 1.dgn
12/17/2024 10:28:41 AM

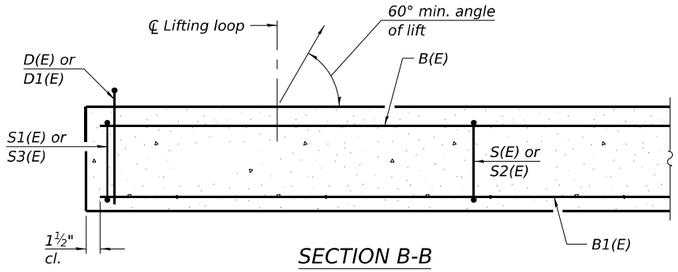

SECTION B-B

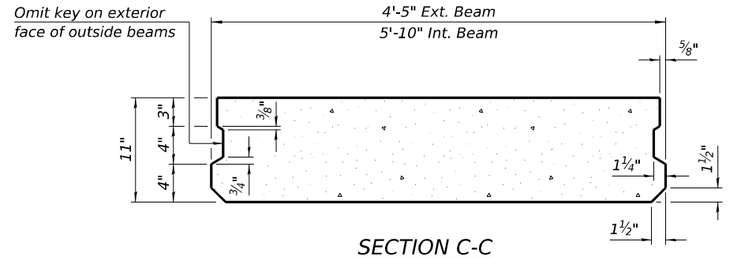

SECTION C-C
(Showing dimensions)

Notes:
The precast bridge approach slab shall be according to Section 504 of the Standard Specifications and shall be paid for at the contract unit price per square foot for Precast Bridge Approach Slab.
Cast-in-place substitution of Precast Bridge Approach Slab is not allowed.
The top surface of precast bridge approach slabs shall be finished similar to precast prestressed deck beams with concrete wearing surface as specified in the IDOT "Manual for Fabrication of Precast Prestressed Concrete Products."
Two ⅛" fabric adjusting shims of the dimensions of the exterior bearing pad shall be provided for each bearing pad location. Cost included with Precast Bridge Approach Slab.
A minimum 2½" Ø lifting pins shall be used to engage the lifting loops during handling.
Compressive strength of precast concrete, f'c shall be 6,000 psi.
Compressive strength of precast concrete during initial lifting, f'ci shall be 5,000 psi.

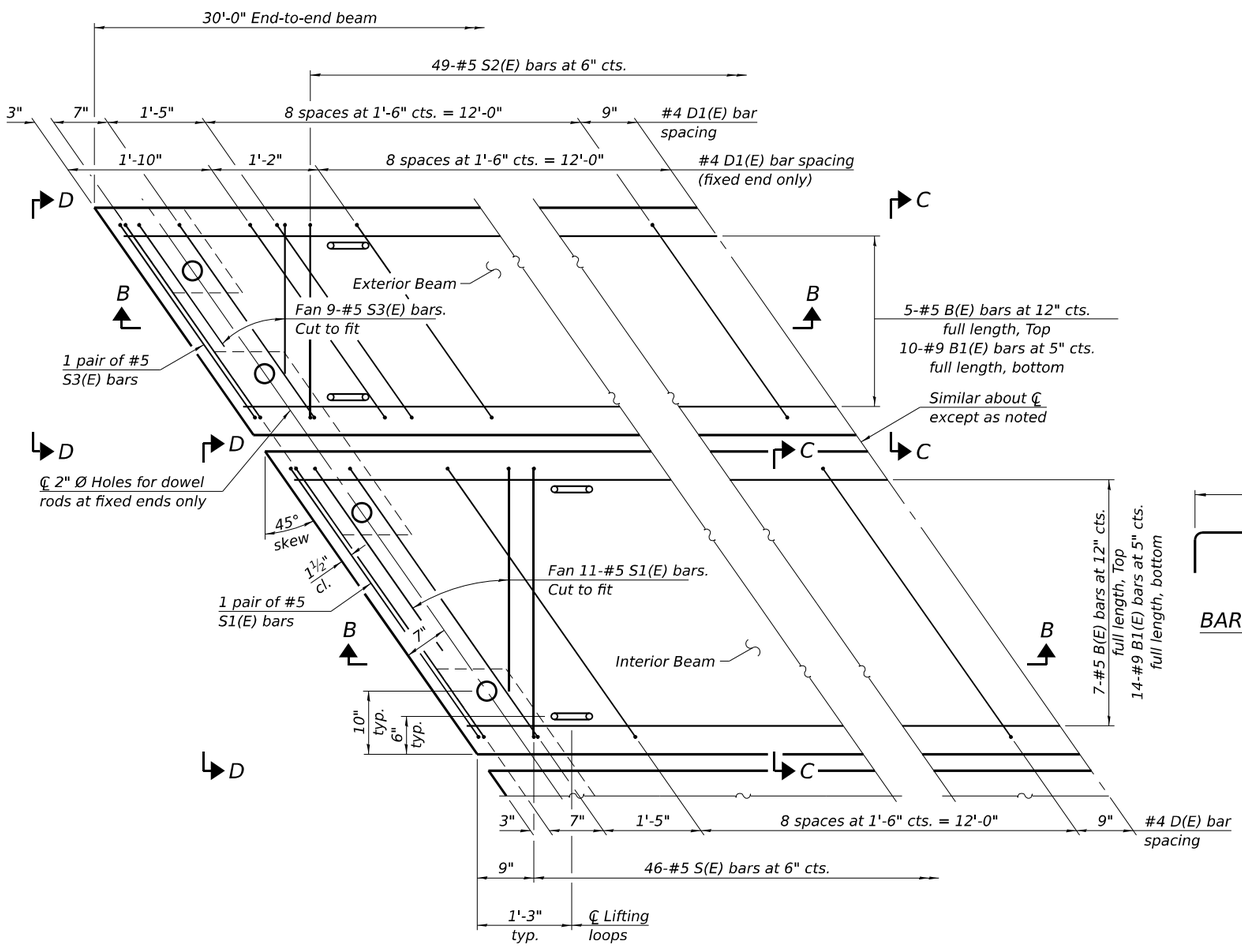

PLAN VIEW
(showing precast bridge approach beams)
(Spacing of D(E) and D1(E) bars may be adjusted up to 3" to miss the dowel rod holes and the lifting loops at the beam ends)

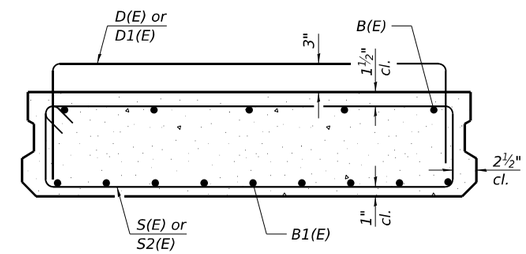

SECTION C-C
(Showing reinforcement)

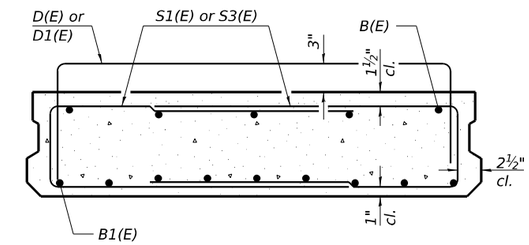

VIEW D-D
(Showing reinforcement)

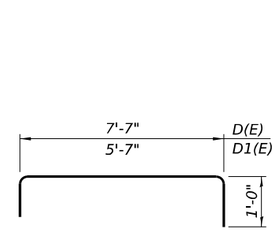

BARS D(E) & D1(E)

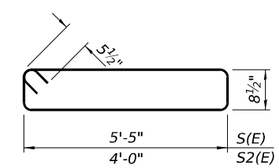

BARS S(E) & S2(E)

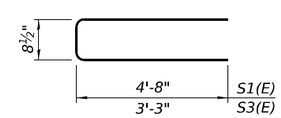

BARS S1(E) & S3(E)

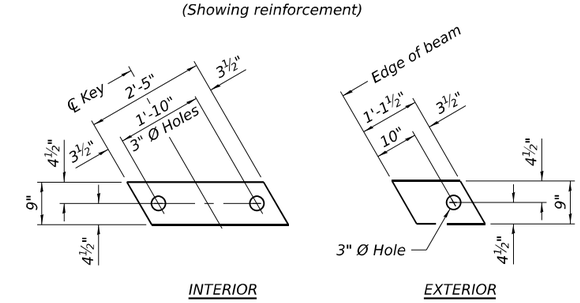

FABRIC BEARING PAD

Notes:
Bearing pads at fixed end shall be ½" thick and bearing pads at expansion end shall be ¾" thick.
Omit holes for fabric bearing pads at approach slab footing end of beams.

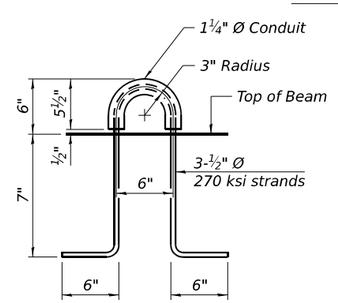

LIFTING LOOP DETAIL
(An alternate lifting loop with a proof load of 25,000 lbs. and utilized according to the manufacturer's recommendations may be used)

BAR LIST
EACH INTERIOR BEAM
(For information only)

Bar	No.	Size	Length	Shape
B(E)	7	#5	29'-8"	—
B1(E)	14	#9	29'-8"	—
D(E)	22	#4	9'-7"	⊓
S(E)	46	#5	13'-2"	⊓
S1(E)	26	#5	10'-1"	⊔

BAR LIST
EACH EXTERIOR BEAM
(For information only)

Bar	No.	Size	Length	Shape
B(E)	5	#5	29'-8"	—
B1(E)	10	#9	29'-8"	—
D1(E)	32	#4	7'-7"	⊓
S2(E)	49	#5	10'-4"	⊓
S3(E)	22	#5	7'-3"	⊔

BA-PDP-39CS-R(>30°) 03-08-2024 (Beams: 36" min. width; 72" max. width)

(Sheet 2 of 3)

QUIGG ENGINEERING INC

USER NAME = kortega	DESIGNED - KFO	REVISED -	
0060138-66M48-013-Approach Details 2.dgn	CHECKED - DRB	REVISED -	
PLOT SCALE = 0.167 ' / in.	DRAWN - JDC	REVISED -	
PLOT DATE =	CHECKED - MDC	REVISED -	

STATE OF ILLINOIS
DEPARTMENT OF TRANSPORTATION

PARTIAL DEPTH PRECAST BRIDGE APPROACH SLAB
STRUCTURE NO. 006-0138

SHEET 13 OF 26 SHEETS

F.A.P. RTE.	SECTION	COUNTY	TOTAL SHEETS	SHEET NO.
646	122V-BR1	BUREAU	69	31

CONTRACT NO. 66M48
ILLINOIS FED. AID PROJECT

MODEL: Default
FILE NAME: S:\2022\22IL092 PTB 205 - 24 D3 -Oates - Var PH I & II Projects\WO-5 BR Final Plans IL-40 over BNSF RR 006-0138\CADD\CADD Sheets\0060138-66M48-013-Approach Details 2.dgn
12/17/2024 10:28:43 AM

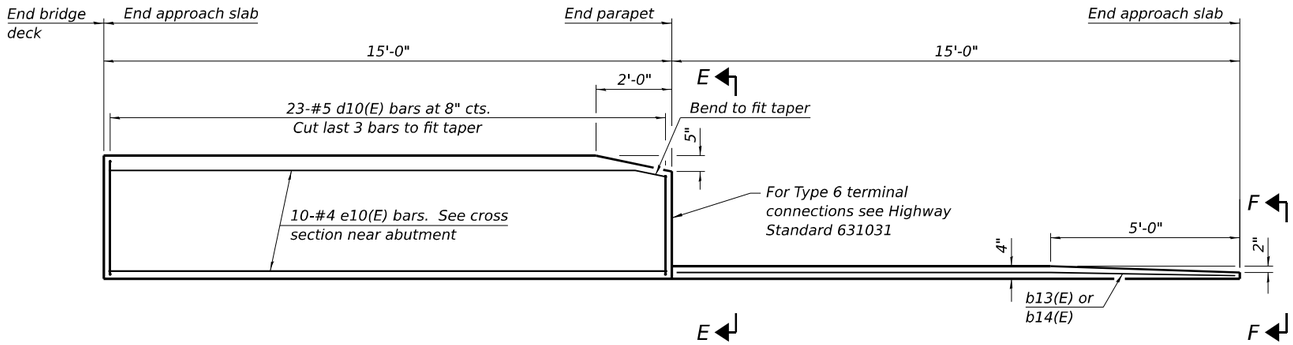

INSIDE ELEVATION OF PARAPET AND CURB

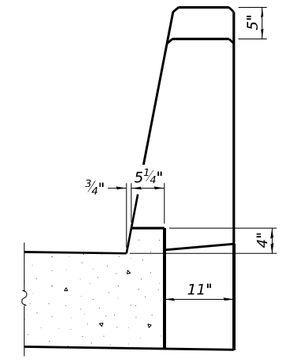

VIEW E-E

Notes:

The joint opening shall be adjusted for temperature per Article 520.04 of the Standard Specifications. However, since this detail is for jointless structures, the length of bridge used to calculate the adjustment shall be equal to half the total bridge length plus the length of the bridge approach slab.

After precast bridge approach slabs have been erected, holes shall be drilled into abutment and anchor dowels placed. Dowel holes shall be filled with non-shrink grout to top of precast slab and cured according to Article 1020.13(a)(3) or 1020.13(a)(5) of the Standard Specifications for a minimum of 24 hours before casting the shear keys and wearing surface.

Any concrete poured monolithically with the wearing surface, such as curbs, shall not be paid for separately, but will be included in the cost of Concrete Wearing Surface, 5".

The strip seal shall extend 6" beyond the edge of the approach slab on each end.

Parapet concrete shall be paid for as Concrete Superstructure.

Approach footing concrete shall be paid for as Concrete Structures.

The approach footing maximum applied service bearing pressure (Qmax) = 2.0 ksf.

Cost of excavation for approach footing included with Concrete Structures.

For Granular Backfill for Structures and drainage treatment details, see sheet 2 of 26.

Cost of cellular polystyrene is included with Concrete Superstructure.

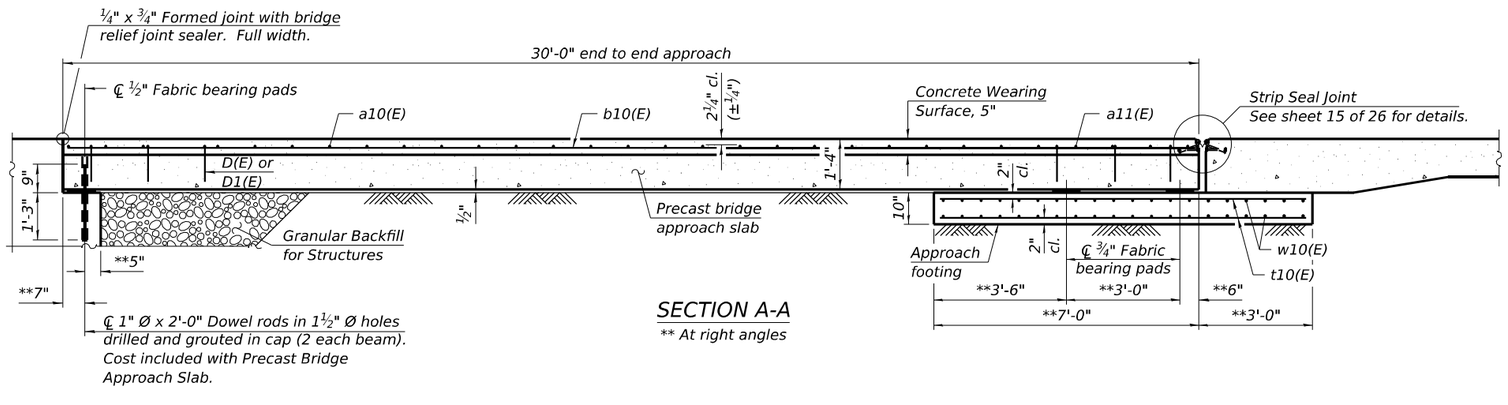

SECTION A-A

** At right angles

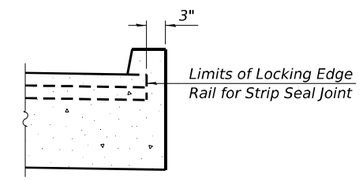

VIEW F-F

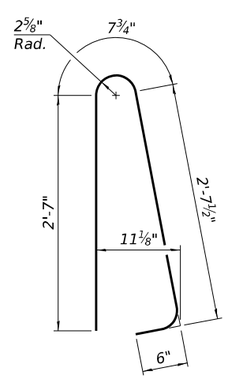

BAR d10(E)

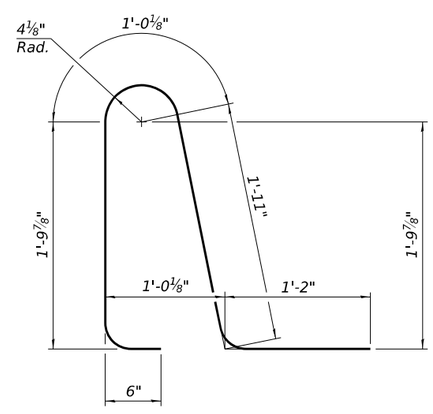

BAR d11(E)

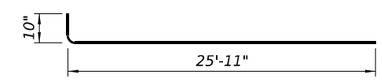

BAR a10(E)

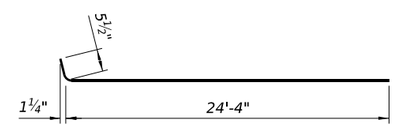

BAR a11(E)

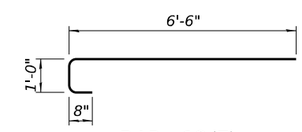

BAR a12(E)

TWO APPROACHES BILL OF MATERIAL

Bar	No.	Size	Length	Shape
a10(E)	44	#5	26'-9"	
a11(E)	44	#4	24'-10"	
a12(E)	44	#5	8'-2"	
b10(E)	66	#4	29'-8"	
b11(E)	8	#5	15'-9"	
b12(E)	8	#5	14'-4"	
b13(E)	2	#4	14'-4"	
b14(E)	2	#4	14'-10"	
d10(E)	92	#5	6'-5"	
d11(E)	92	#5	6'-5"	
e10(E)	40	#4	14'-8"	
t10(E)	136	#4	13'-8"	
w10(E)	160	#5	24'-8"	
Concrete Superstructure			Cu. Yd.	7.8
Concrete Structures			Cu. Yd.	29.0
Reinforcement Bars, Epoxy Coated			Pound	10,920
Precast Bridge Approach Slab			Sq. Ft.	1,930
Concrete Wearing Surface, 5"			Sq. Yd.	227

(Beams: 36" min. width; 72" max. width)

(Sheet 3 of 3)

Notes:

The strip seal shall be made continuous and shall have a minimum thickness of ¼". The configuration of the strip seal shall match the configuration of the locking edge rails. Open or "webbed" strip seal gland configurations are not permitted. The gland shall be sized for a maximum rated movement of 4 inches.

The locking edge rails depicted are configured for typical applications and are conceptual only. The actual configuration of the locking edge rails and matching strip seal may vary from manufacturer to manufacturer provided they fit the application and meet the minimum anchorage shown. Flanged edge rails, however, will not be allowed. Locking edge rails may exceed the 4½" maximum depth provided the anchorage system is revised according to the manufacturer's recommendation.

The manufacturer's recommended installation methods shall be followed.

All steel components shall be galvanized after fabrication according to Article 520.03 of the Standard Specifications.

The Maximum space between locking edge rail segments shall be c" and sealed with a suitable sealant; however, any rail joint within 10' measured perpendicular to the face of the curb or parapet shall be welded as shown in the locking edge rail splice detail.

Cost of anchorage studs included with Preformed Joint Strip Seal.

The concrete opening below the strip seal will vary based on the locking edge rail chosen by the Contractor. Deck and parapet lengths shown elsewhere in the plans are dimensioned to the concrete opening, not the joint opening, and are based on the rolled locking edge rail. If the Contractor elects to use a different locking edge rail, dimensional adjustments may be required. One exception to this would be the strip seal joint at the end of the precast bridge approach slab. For these cases the pavement connector length shall be adjusted, not the length of the bridge approach slab.

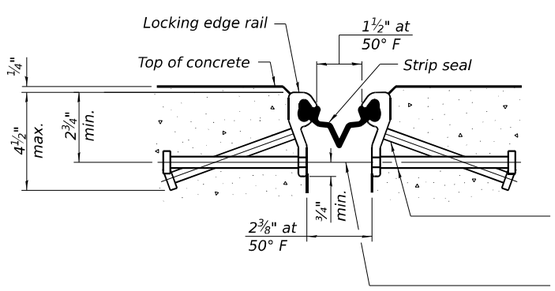

SHOWING ROLLED RAIL JOINT

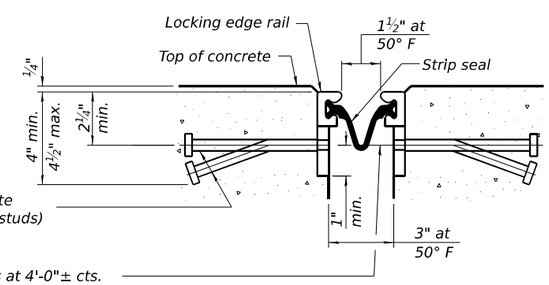

SHOWING WELDED RAIL JOINT

* ⅝" Ø x 6" studs @ 6" cts. (alternate angled/bent studs with horizontal studs)

⅜" Ø threaded rods in 7/16" Ø holes at 4'-0"± cts. for holding the proper joint opening based on the temperature during the deck pour. Place to miss studs. All rods shall be burned, or sawed off flush with the plates after concrete is set.

SECTION A-A

* Granular or solid flux filled headed studs conforming to Article 1006.32 of the Std. Specs., automatically end welded.

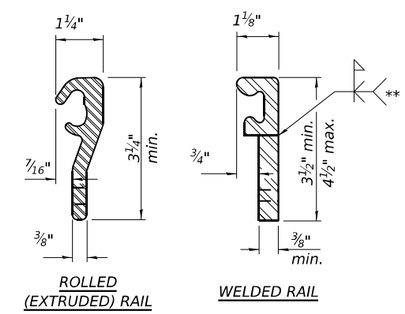

LOCKING EDGE RAILS

** Back gouge not required if complete joint penetration is verified by mock-up.

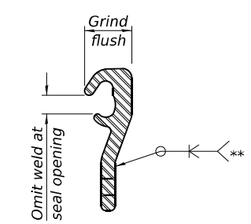

LOCKING EDGE RAIL SPLICE

The inside of the locking edge rail groove shall be free of weld residue. Rolled rail shown, welded rail similar.

BILL OF MATERIAL

Item	Unit	Total
Preformed Joint Strip Seal	Foot	92.5

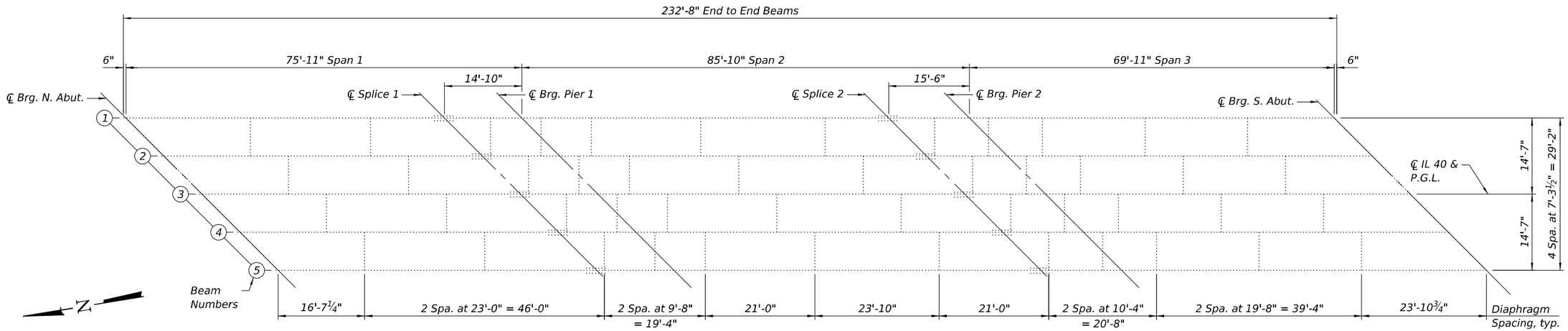

EXISTING FRAMING PLAN

(All existing beams are W33x141)

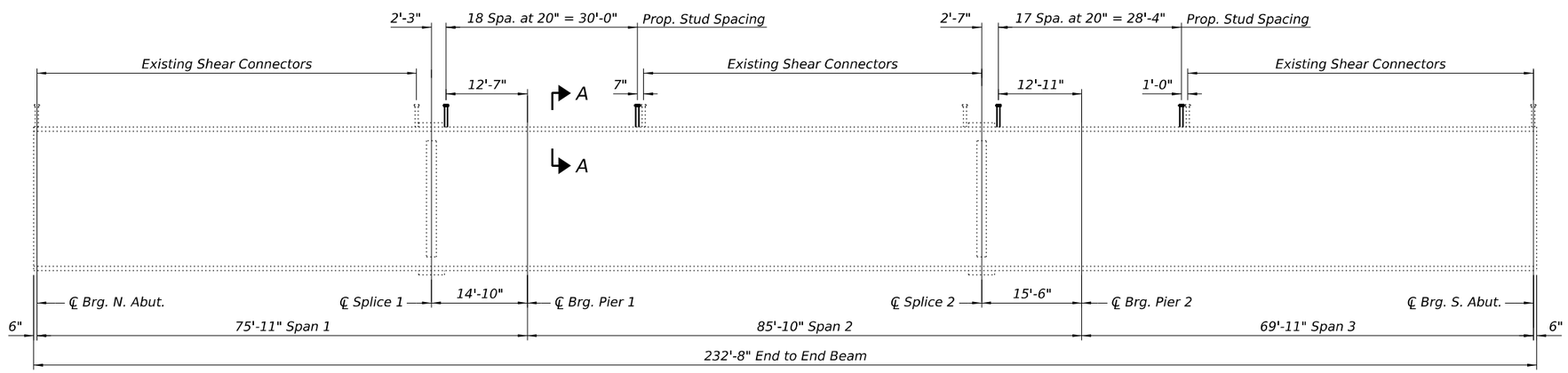

EXISTING W33x141 BEAM ELEVATION

(Showing Shear Stud Spacing, typ. Beam 1 thru 5)

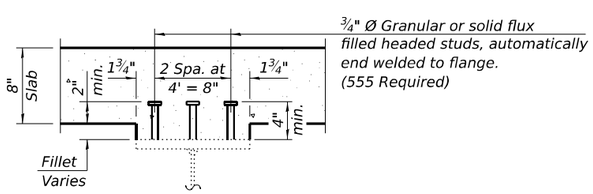

SECTION A-A

QUIGG ENGINEERING INC	USER NAME = kortega	DESIGNED - KFO	REVISED -	STATE OF ILLINOIS DEPARTMENT OF TRANSPORTATION	STRUCTURAL STEEL STRUCTURE NO. 006-0138	F.A.P. RTE.	SECTION	COUNTY	TOTAL SHEETS / SHEET NO.
	0060138-66M48-016-Structural Steel.dgn	CHECKED - DRB	REVISED -			646	122V-BR1	BUREAU	69 / 34
	PLOT SCALE = 20.833 ' / in.	DRAWN - JDC	REVISED -					CONTRACT NO. 66M48	
	PLOT DATE =	CHECKED - MDC	REVISED -		SHEET 16 OF 26 SHEETS		ILLINOIS	FED. AID PROJECT	

MODEL: Default
FILE NAME: S:\2022\221L092 PTB 205 - 24 D3 -Oates - Var PH I & II Projects\WO-5 BR Final Plans IL-40 over BNSF RR 006-0138\CADD\CADD Sheets\0060138-66M48-016-Structural Steel.dgn
12/17/2024 10:28:46 AM

	INTERIOR BEAM MOMENT TABLE					
			0.4 Sp. 1	Pier 1	0.5 Sp. 2	Pier 2	0.6 Sp. 3
	I_s	(in⁴)	7,450	7,450	7,450	7,450	7,450
	I_c (n)	(in⁴)	21,132	10,390	21,132	10,390	21,132
	I_c (3n)	(in⁴)	15,642	10,390	15,642	10,390	15,642
	S_s	(in³)	448	448	448	448	448
	S_c (n)	(in³)	675	524	675	524	675
	S_c (3n)	(in³)	612	524	612	524	612
	Z	(in³)	-	-	-	-	-
	ℓ	(k/ft)	0.904	0.904	0.904	0.904	0.904
	Mℓ	(ft k)	386	-598	266	-535	316
	sℓ	(k/ft)	0.370	0.370	0.370	0.370	0.370
	M_s ℓ	(ft k)	157	-247	107	-221	129
	Mℓ	(ft k)	581	-487	533	-461	527
	MIM	(ft k)	145	-118	126	-114	135
	$\frac{5}{3}$ [Mℓ + $_I$]	(ft k)	1,210	-1,008	1,098	-958	1,103
	Ma	(ft k)	2,279	-2,409	1,912	-2,228	2,012
*	Mu	(ft k)	3,526	2,762	3,526	2,762	3,526
	f_s ℓ (non-comp)	(ksi)	10.3	-16.0	7.1	-14.3	8.5
	f_s ℓ (comp)	(ksi)	3.1	-5.7	2.1	-5.1	2.5
	f_s $\frac{5}{3}$ [Mℓ + M_I]	(ksi)	21.5	-23.1	19.5	-21.9	19.6
	f_s (Overload)	(ksi)	34.9	-44.8	28.7	-41.3	30.6
**	f_s (Total)	(ksi)	-	-	-	-	-
	VR	(k)	66.0	-	66.6	-	66.6

* Compact section

** Braced non-compact and partially braced section

INTERIOR BEAM REACTION TABLE				
		N. Abut.	Pier 1	Pier 2	S. Abut.
R ℓ	(k)	79.7	115.2	109.0	76.2
R ℓ	(k)	45.3	57.9	56.4	44.8
R_I	(k)	11.3	14.0	13.9	11.5
R_{Total}	(k)	136.3	187.1	179.3	132.5

Note: Abutment Reactions include loads from the approach slabs and concrete diaphragms.

I_s , S_s : Non-composite moment of inertia and section modulus of the steel section used for computing f_s (Total and Overload) due to non-composite dead loads (in.⁴ and in.³).

I_c (n), S_c (n): Composite moment of inertia and section modulus of the steel and deck based upon the modular ratio, "n", used for computing f_s (Total and Overload) due to short-term composite live loads (in.⁴ and in.³).

I_c (3n), S_c (3n): Composite moment of inertia and section modulus of the steel and deck based upon 3 times the modular ratio, "3n", used for computing f_s (Total and Overload) due to long-term composite (superimposed) dead loads (in.⁴ and in.³).

Z: Plastic Section Modulus of the steel section in non-composite areas (in.³).

ℓ : Un-factored non-composite dead load (kips/ft.).

Mℓ : Un-factored moment due to non-composite dead load (kip-ft.).

sℓ : Un-factored long-term composite (superimposed) dead load (kips/ft.)

M_s ℓ : Un-factored moment due to long-term composite (superimposed) dead load (kip-ft.).

Mℓ : Un-factored live load moment (kip-ft.).

M_I : Un-factored moment due to impact (kip-ft.).

Ma: Factored design moment (kip-ft.).
1.3 [Mℓ + M_sℓ + $\frac{5}{3}$ (Mℓ + M_I)]

Mu: Compact composite moment capacity according to AASHTO LFD 10.50.1.1 or compact non-composite moment capacity according to AASHTO LFD 10.48.1 (kip-ft.).

f_s (Overload): Sum of stresses as computed from the moments below (ksi).
Mℓ + M_sℓ + $\frac{5}{3}$ (Mℓ + M_I)

f_s (Total): Sum of stresses as computed from the moments below on non-compact section (ksi).
1.3 [Mℓ + M_sℓ + $\frac{5}{3}$ (Mℓ + M_I)]

VR: Maximum ℓ + impact shear range within the composite portion of the span for stud shear connector design (kips).

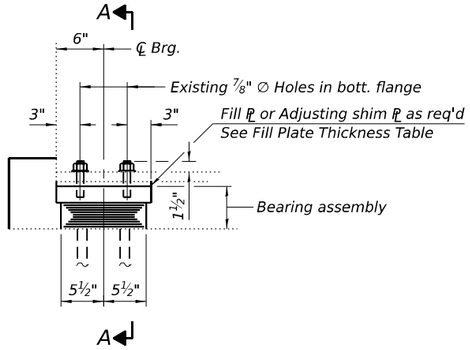

ELEVATION AT ABUT.

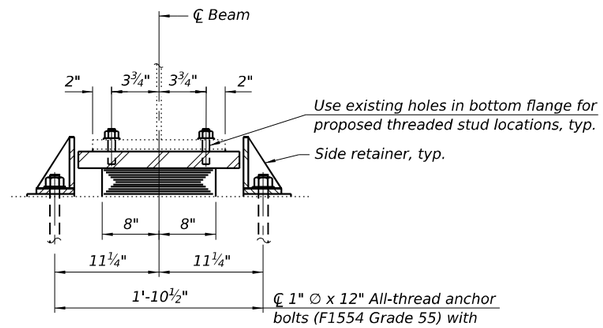

SECTION A-A

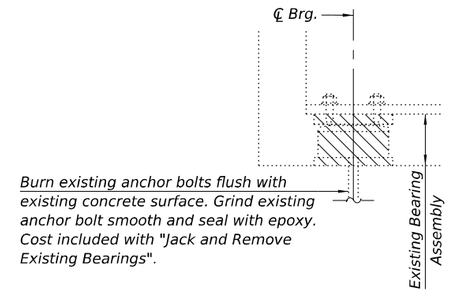

EXISTING BEARING REMOVAL DETAIL

(South Abutment shown, North Abutment similar)

TYPE I ELASTOMERIC EXP. BRG.

(At North and South Abutments)

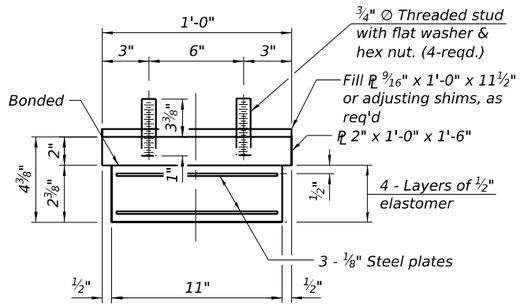

BEARING ASSEMBLY AT N. ABUT.

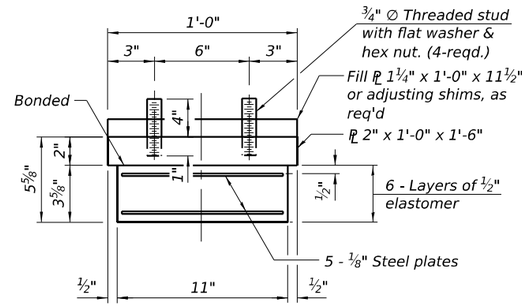

BEARING ASSEMBLY AT S. ABUT.

Note:
Shim plates shall not be placed
under bearing assembly.

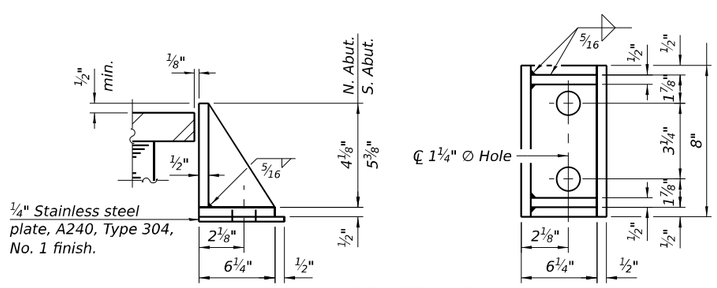

SIDE RETAINER

Equivalent rolled angle with stiffeners
will be allowed in lieu of welded plates.

BEARING FILL PLATE
THICKNESS TABLE

Location	Thickness
North Abutment - All Beams	9/16"
South Abutment - All Beams	1¼"

JACK AND REMOVE EXISTING BEARING PROCEDURE

1. The contractor shall submit, for approval by the Engineer, plans for jacking and removing the existing bearings prior to commencing any related work. See Special Provision.
2. Jacking and removal of existing bearings shall be done after the existing deck is removed and before new deck is poured.
3. The maximum dead load reaction per beam (weight of steel only) is 5 kips per beam at each abutment.
   The minimum jack capacity is 10 kips.
4. The new bearings shall be in place and the jacks lowered prior to pouring the new deck.

Notes:
Side retainers, stainless steel plates, shim and fill plates shall be included in the cost of Elastomeric Bearing Assembly, Type I.

Two ⅛ in. adjusting shims shall be provided for each bearing in addition to all other plates or shims and placed as shown on bearing details.

The structural steel plates of the Bearing Assembly shall conform to the requirements of AASHTO M270 Grade 50.

All (embedded and separate) bearing plates, side retainers, anchor bolts, nuts, washers and pintles shall be galvanized according to AASHTO M111 or M232 as applicable.

Temporary Diaphragm removal and re-erection may be required to facilitate drilling holes. Cost shall be included with Elastomeric Bearing Assembly Type 1.

BILL OF MATERIAL

Item	Unit	Total
Elastomeric Bearing Assembly Type I	Each	10
Anchor Bolts, 1"	Each	40
Jack & Remove Existing Bearings	Each	10

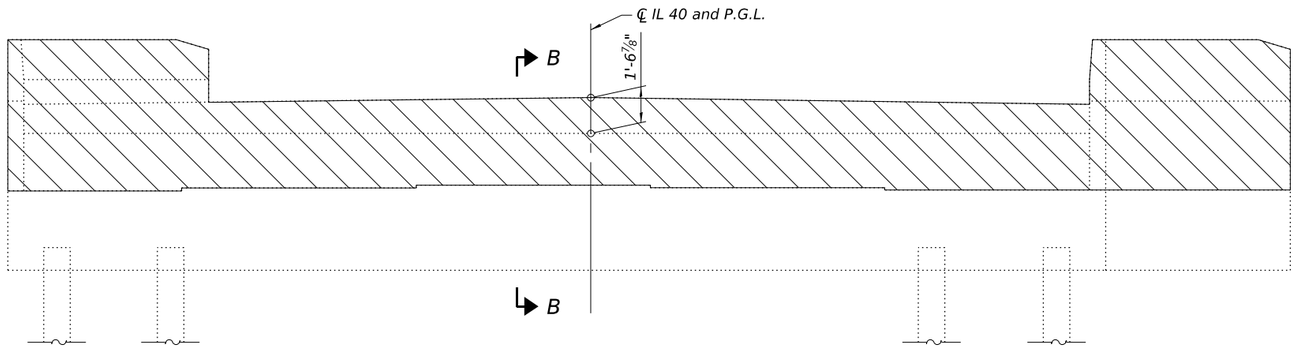

ELEVATION

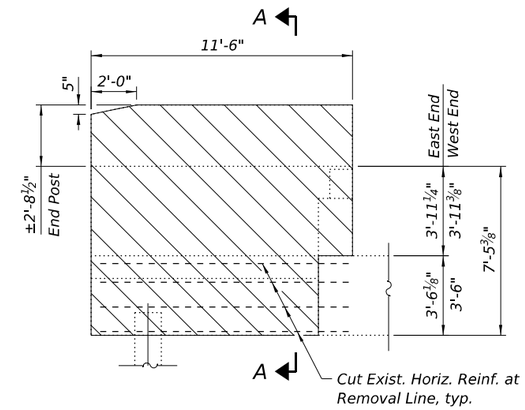

WINGWALL ELEVATION

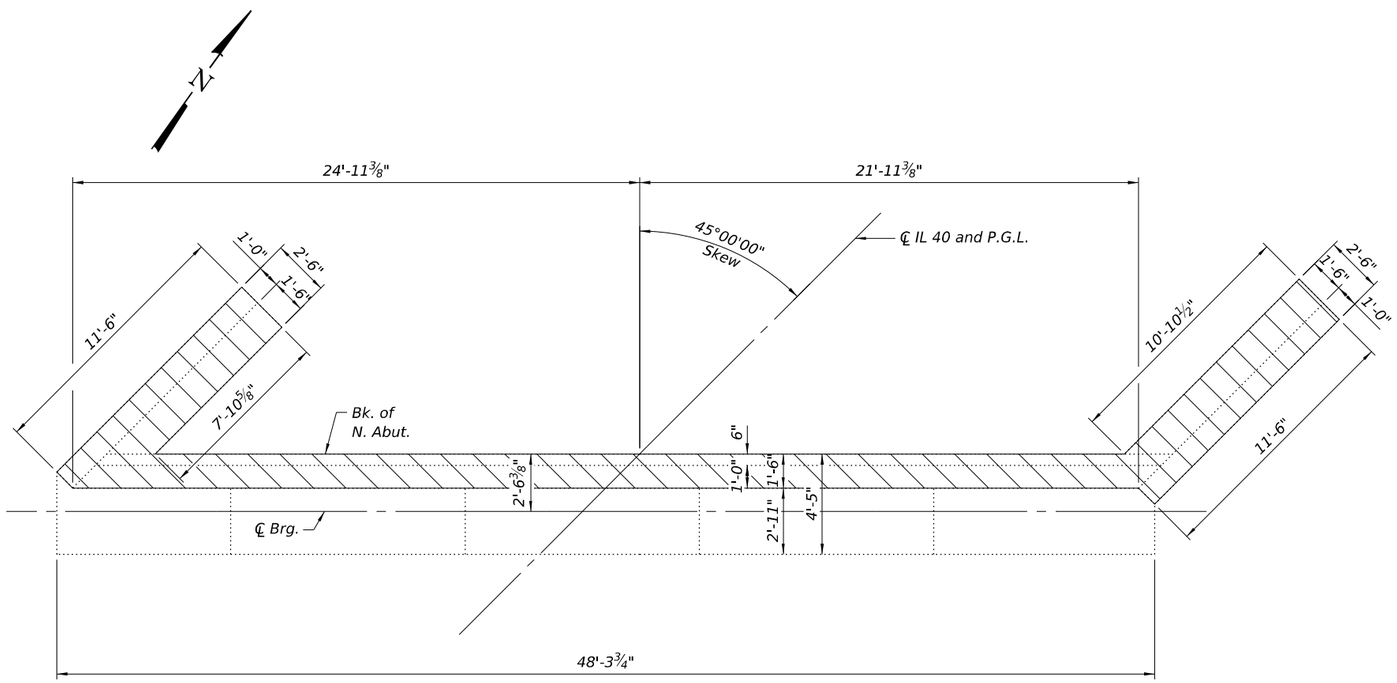

PLAN

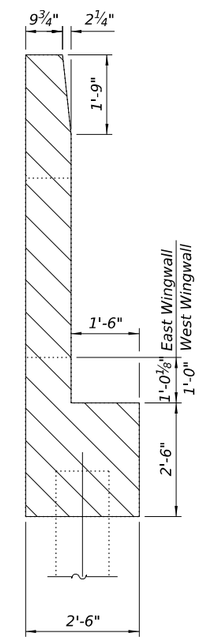

SECTION A-A

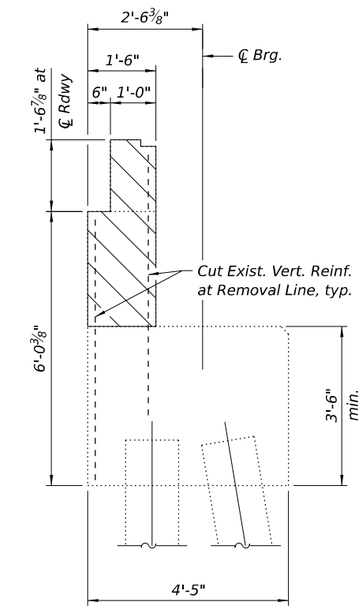

SECTION B-B

LEGEND

Concrete Removal

BILL OF MATERIAL

Item	Unit	Quantity
Concrete Removal	Cu. Yd.	19.4

QUIGG ENGINEERING INC

USER NAME = kortega	DESIGNED - KFO	REVISED -	
0060138-66M48-019-North Abut. Removal.dgn	CHECKED - DRB	REVISED -	
PLOT SCALE = 6.667 ' / in.	DRAWN - JDC	REVISED -	
PLOT DATE =	CHECKED - MDC	REVISED -	

STATE OF ILLINOIS
DEPARTMENT OF TRANSPORTATION

NORTH ABUTMENT REMOVAL
STRUCTURE NO. 006-0138

SHEET 19 OF 26 SHEETS

F.A.P. RTE.	SECTION	COUNTY	TOTAL SHEETS	SHEET NO.
646	122V-BR1	BUREAU	69	37
		CONTRACT NO. 66M48		
	ILLINOIS	FED. AID PROJECT		

MODEL: Default
FILE NAME: S:\2022\22IL092 PTB 205 - 24 D3 -Oates - Var PH I & II Projects\VO-5 BR Final Plans IL-40 over BNSF RR 006-0138\CADD\CADD Sheets\0060138-66M48-019-North Abut. Removal.dgn
12/17/2024 10:28:49 AM

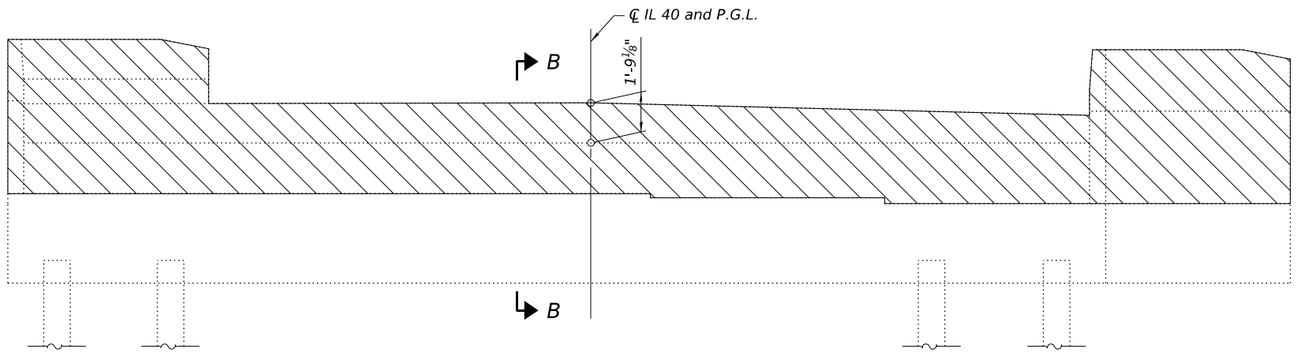

ELEVATION

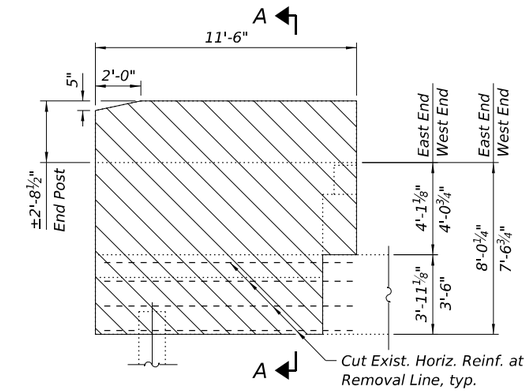

WINGWALL ELEVATION

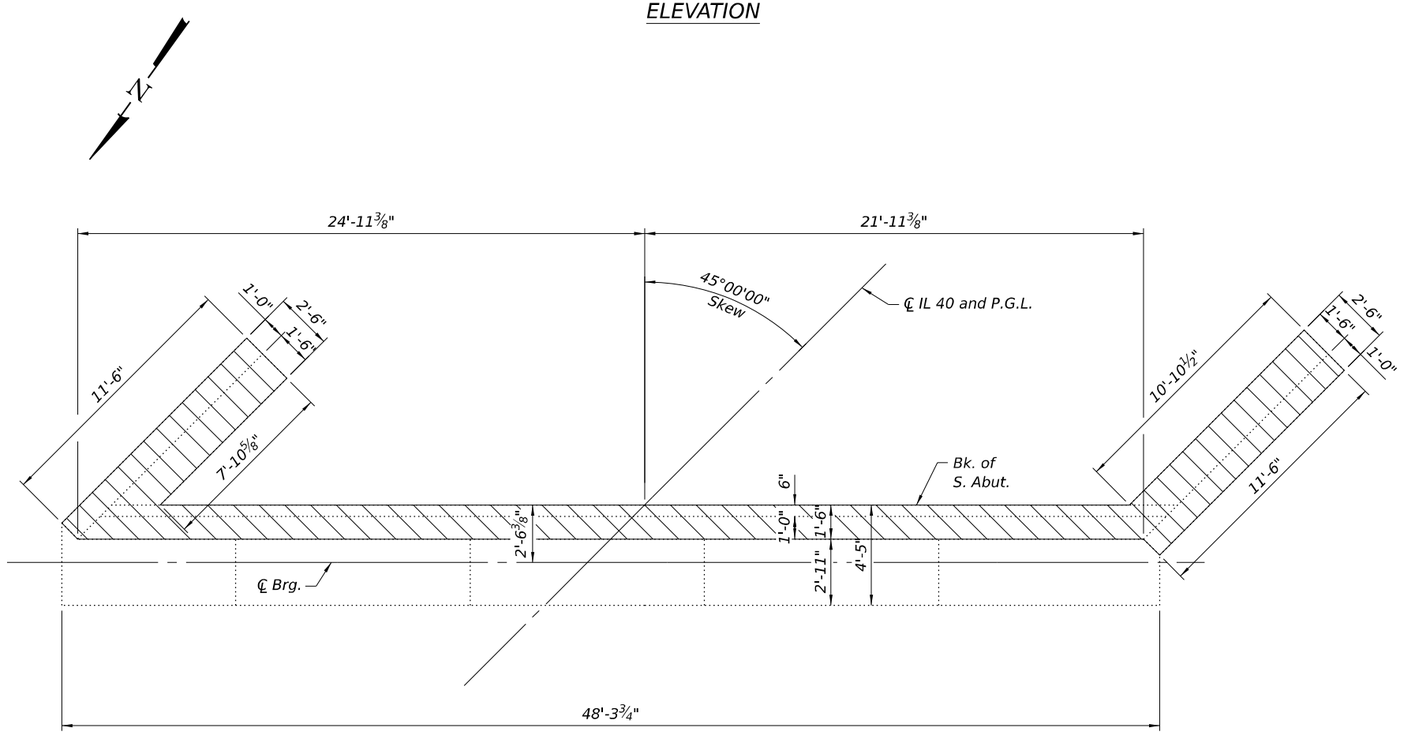

PLAN

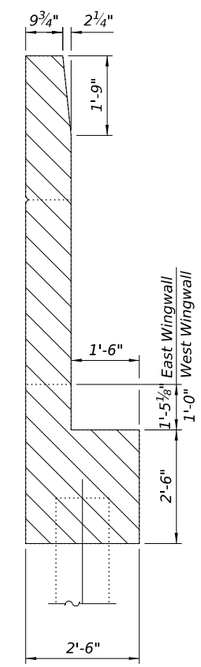

SECTION A-A

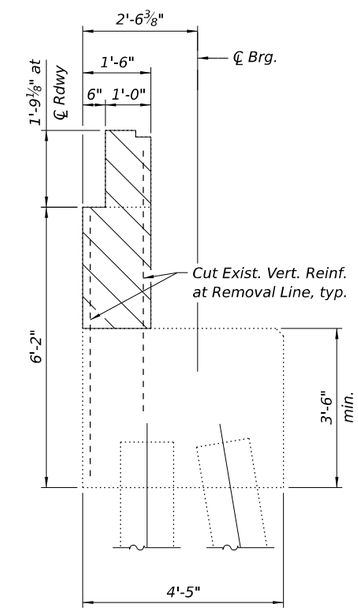

SECTION B-B

LEGEND

Concrete Removal

BILL OF MATERIAL

Item	Unit	Quantity
Concrete Removal	Cu. Yd.	19.8

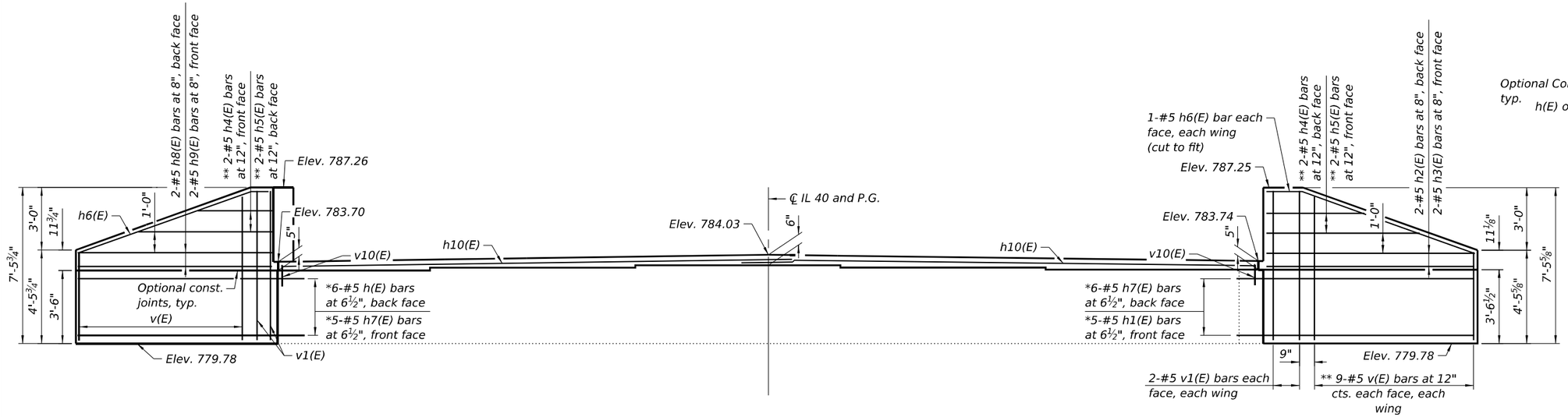

ELEVATION

* Epoxy Grout bars into 1'-4" min., U.N.O. drilled holes in the abutment cap according to Section 584 of the Standard Specifications.

** See Field Cutting Diagram.

MINIMUM BAR LAP

#5 bar = 3'-4"

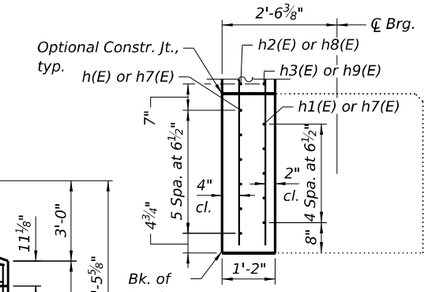

SECTION A-A

(Showing Grouted Bars at Wingwall)
(Horiz. Dimensions at right angles to abutment)
(Opposite Wing Similar)

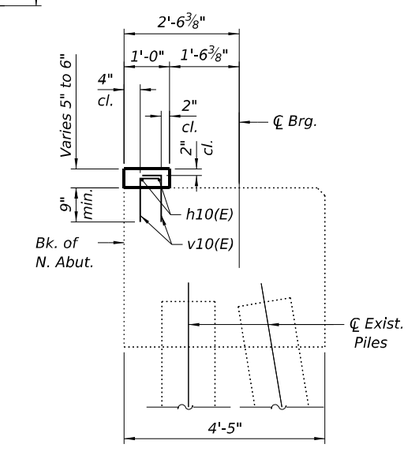

SECTION THRU EXISTING PILE CAP

(Horiz. Dimensions at right angles to abutment)

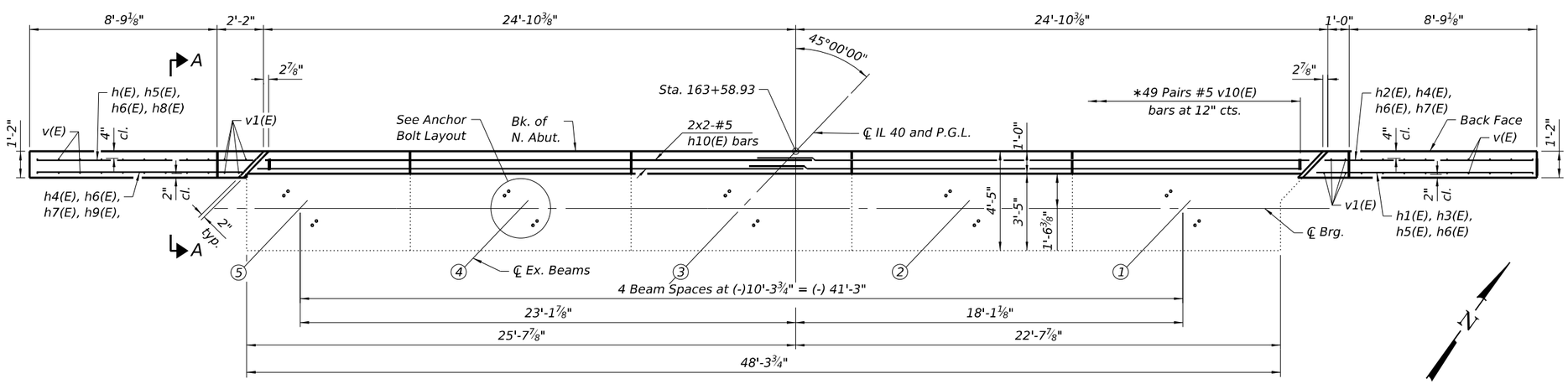

PLAN

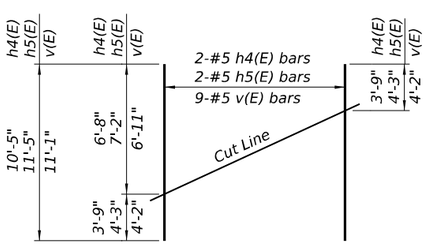

FIELD CUTTING DIAGRAM

Order h4(E), h5(E) and v(E) full length. Cut as shown and use remainder of bars in opposite wing.

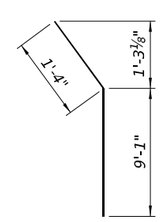

BAR h6(E)

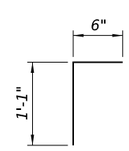

BAR v10(E)

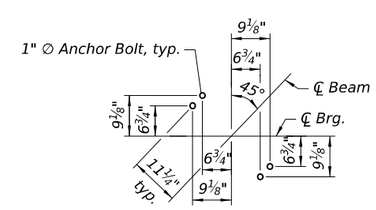

ANCHOR BOLT LAYOUT

BILL OF MATERIAL

Bar	No.	Size	Length	Shape
h(E)	6	#5	11'-9"	
h1(E)	5	#5	11'-11"	
h2(E)	2	#5	9'-9"	
h3(E)	2	#5	10'-3"	
h4(E)	2	#5	10'-5"	
h5(E)	2	#5	11'-5"	
h6(E)	4	#5	10'-5"	
h7(E)	11	#5	11'-5"	
h8(E)	2	#5	10'-1"	
h9(E)	2	#5	9'-7"	
h10(E)	4	#5	26'-2"	
v(E)	18	#5	11'-1"	
v1(E)	8	#5	7'-1"	
v10(E)	98	#5	1'-7"	
Structure Excavation			Cu. Yd.	109
Concrete Structures			Cu. Yd.	6.6
Reinforcement Bars, Epoxy Coated			Pound	980

Bars indicated thus 1 x 2-#4 ext. indicates 1 line of bars with 2 lengths per line.

QUIGG ENGINEERING INC

USER NAME = kortega	DESIGNED - KFO	REVISED -	
0060138-66M48-021-North Abutment.dgn	CHECKED - DRB	REVISED -	
PLOT SCALE = 6.667 ' / in.	DRAWN - JDC	REVISED -	
PLOT DATE =	CHECKED - MDC	REVISED -	

STATE OF ILLINOIS
DEPARTMENT OF TRANSPORTATION

NORTH ABUTMENT MODIFICATIONS
STRUCTURE NO. 006-0138

SHEET 21 OF 26 SHEETS

F.A.P. RTE.	SECTION	COUNTY	TOTAL SHEETS	SHEET NO.
646	122V-BR1	BUREAU	69	39
		CONTRACT NO. 66M48		
		ILLINOIS	FED. AID PROJECT	

MODEL: Default
FILE NAME: S:\2022\22IL092 PTB 205 - 24 D3 -Oates - Var PH I & II Projects\WO-5 BR Final Plans IL-40 over BNSF RR 006-0138\CADD\CADD Sheets\0060138-66M48-021-North Abutment.dgn
12/17/2024 10:28:51 AM

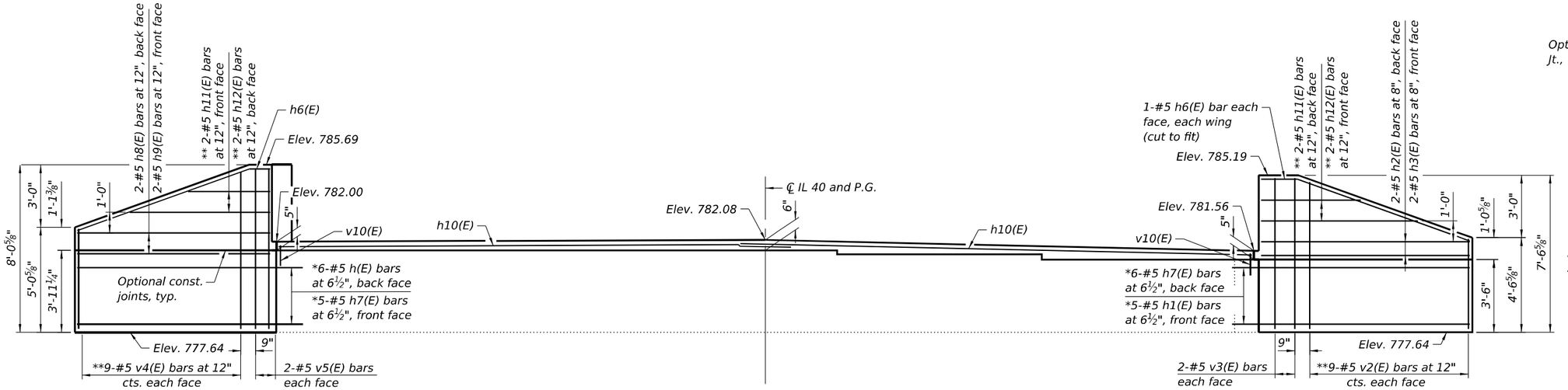

ELEVATION

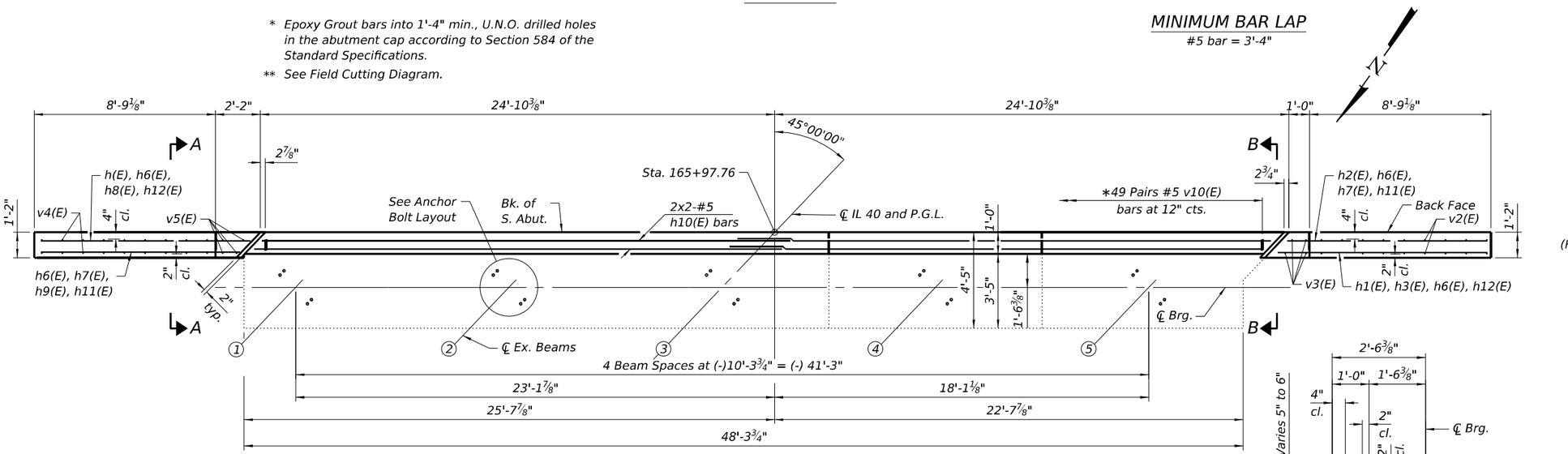

PLAN

* Epoxy Grout bars into 1'-4" min., U.N.O. drilled holes in the abutment cap according to Section 584 of the Standard Specifications.

** See Field Cutting Diagram.

MINIMUM BAR LAP

#5 bar = 3'-4"

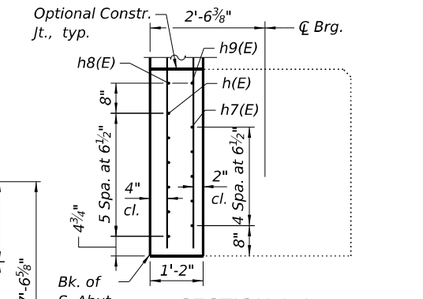

SECTION A-A

(Showing Grouted Bars at Wingwall)
(Horiz. Dimensions at right angles to abutment)

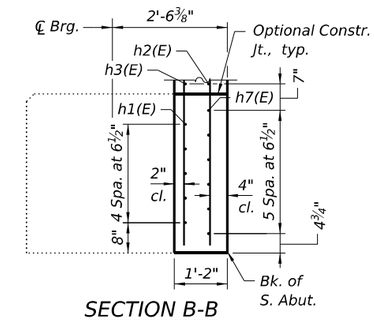

SECTION B-B

(Showing Grouted Bars at Wingwall)
(Horiz. Dimensions at right angles to abutment)

BILL OF MATERIAL

Bar	No.	Size	Length	Shape
h(E)	6	#5	11'-9"	
h1(E)	5	#5	11'-11"	
h2(E)	2	#5	9'-9"	
h3(E)	2	#5	10'-3"	
h6(E)	4	#5	10'-5"	
h7(E)	11	#5	11'-5"	
h8(E)	2	#5	10'-1"	
h9(E)	2	#5	9'-7"	
h10(E)	4	#5	26'-2"	
h11(E)	2	#5	11'-3"	
h12(E)	2	#5	12'-5"	
v2(E)	9	#5	11'-3"	
v3(E)	4	#5	7'-2"	
v4(E)	9	#5	12'-3"	
v5(E)	4	#5	7'-8"	
v10(E)	98	#5	1'-7"	
Structure Excavation			Cu. Yd.	118
Concrete Structures			Cu. Yd.	7.0
Reinforcement Bars, Epoxy Coated			Pound	1,000

Bars indicated thus 1 x 2-#4 ext. indicates 1 line of bars with 2 lengths per line.

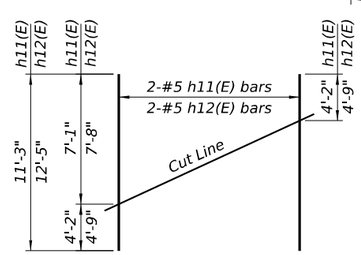

FIELD CUTTING DIAGRAM

Order h11(E) and h12(E) full length. Cut as shown and use remainder of bars in opposite wing.

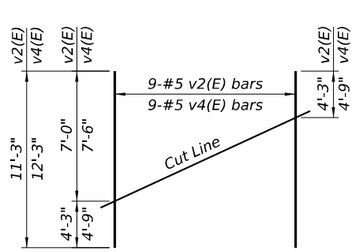

FIELD CUTTING DIAGRAM

Order v2(E) and v4(E) full length. Cut as shown and use remainder of bars in opposite face.

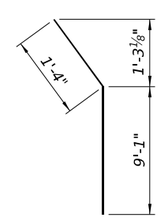

BAR h6(E)

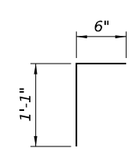

BAR v10(E)

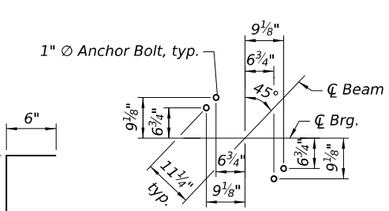

ANCHOR BOLT LAYOUT

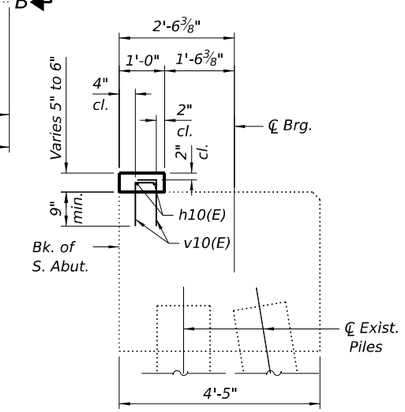

SECTION THRU EXISTING PILE CAP

(Horiz. Dimensions at right angles to abutment)

QUIGG ENGINEERING INC

USER NAME = kortega	DESIGNED - KFO	REVISED -	
0060138-66M48-022-South Abutment.dgn	CHECKED - DRB	REVISED -	
PLOT SCALE = 6.667 ' / in.	DRAWN - JDC	REVISED -	
PLOT DATE =	CHECKED - MDC	REVISED -	

STATE OF ILLINOIS
DEPARTMENT OF TRANSPORTATION

SOUTH ABUTMENT MODIFICATIONS
STRUCTURE NO. 006-0138

SHEET 22 OF 26 SHEETS

F.A.P. RTE.	SECTION	COUNTY	TOTAL SHEETS	SHEET NO.
646	122V-BR1	BUREAU	69	40
		CONTRACT NO. 66M48		
		ILLINOIS	FED. AID PROJECT	

MODEL: Default
FILE NAME: S:\2022\22IL092 PTB 205 - 24 D3 -Oates - Var PH I & II Projects\WO-5 BR Final Plans IL-40 over BNSF RR 006-0138\CADD\CADD Sheets\0060138-66M48-022-South Abutment.dgn
12/17/2024 10:28:52 AM

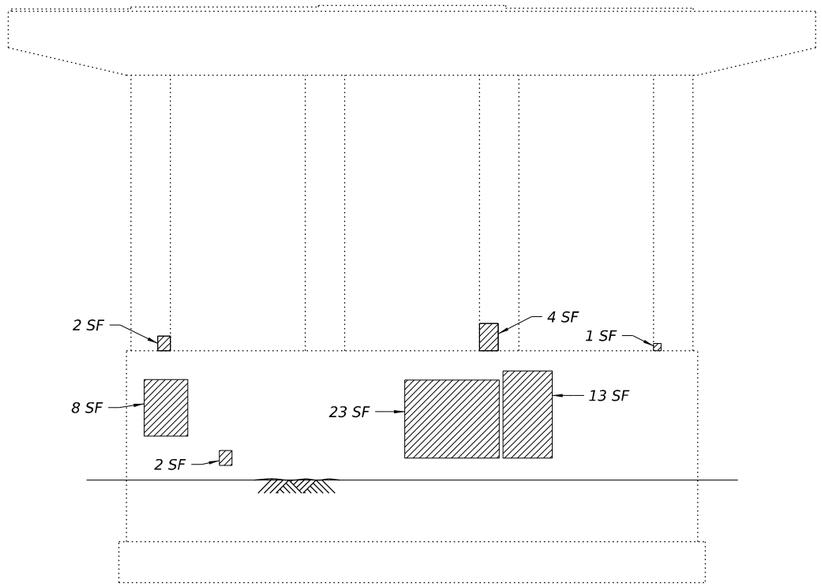

ELEVATION PIER 1
(Looking South)

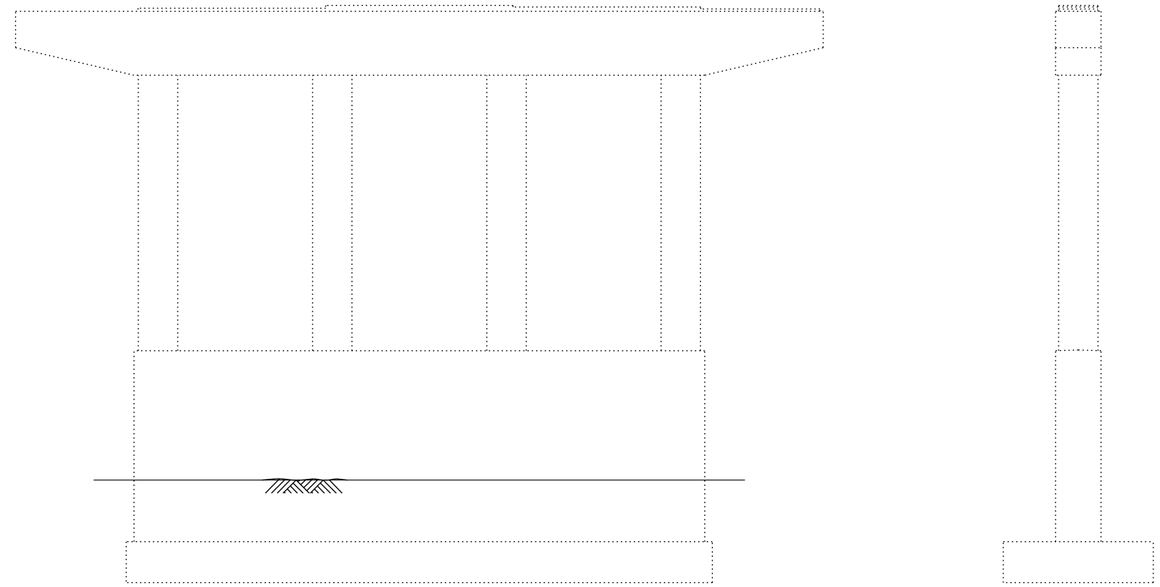

ELEVATION PIER 1
(Looking Notth)

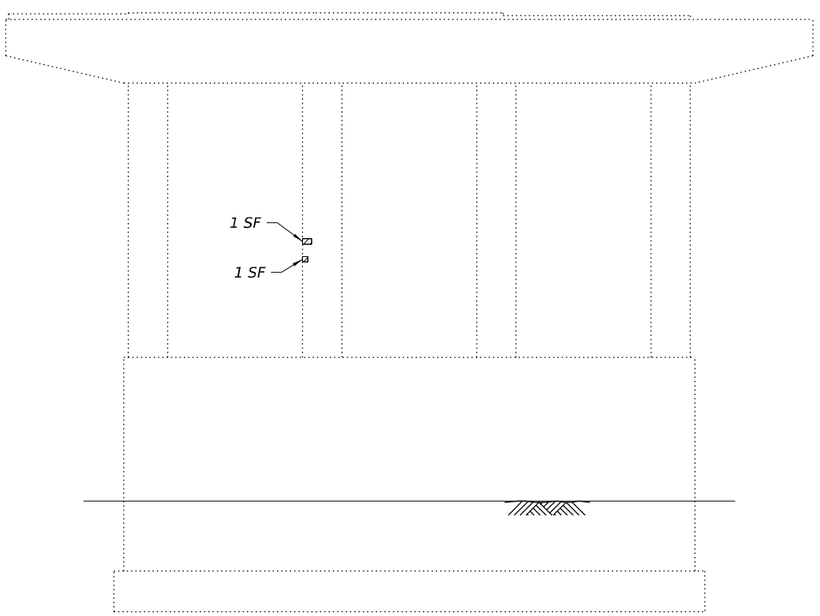

ELEVATION PIER 2
(Looking South)

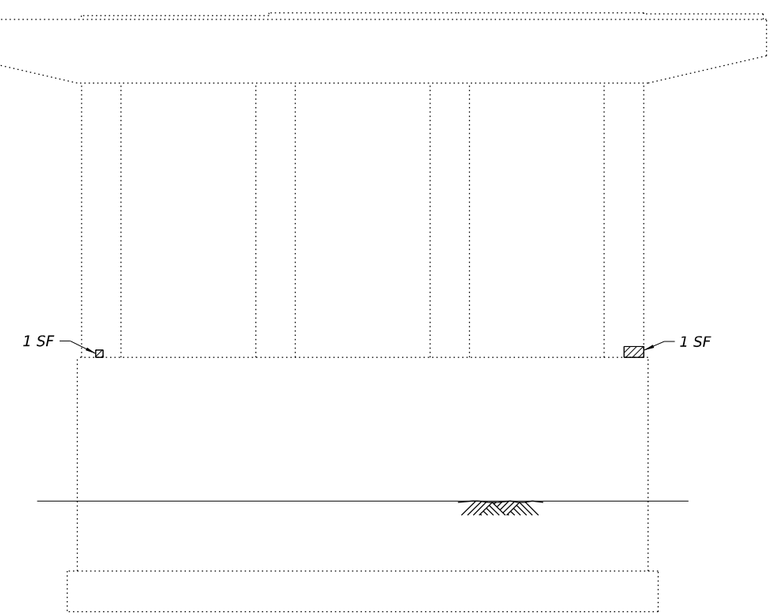

ELEVATION PIER 2
(Looking North)

Note:
Areas of Structural Repairs of Concrete are estimated based off the approved 2022 Bridge Condition Report. The engineer shall confirm limits of repairs in field at time of construction.

LEGEND

Structural Repair of Concrete
(Depth equal to or less than 5 inches)

BILL OF MATERIAL

ITEM	UNIT	TOTAL
Structural Repair of Concrete (Depth equal to or less than 5")	Sq. Ft.	57

MODEL: Default
FILE NAME: S:\2022\22IL092 PTB 205 - 24 D3 -Oates - Var PH I & II Projects\WO-5 BR Final Plans IL-40 over BNSF RR 006-0138\CADD\CADD Sheets\0060138-66M48-023-Pier 1&2 Repair.dgn

QUIGG ENGINEERING INC

USER NAME = kortega	DESIGNED - KFO	REVISED -	
0060138-66M48-023-Pier 1&2 Repair.dgn	CHECKED - DRB	REVISED -	
PLOT SCALE = 8.333 ' / in.	DRAWN - JDC	REVISED -	
PLOT DATE =	CHECKED - MDC	REVISED -	

STATE OF ILLINOIS
DEPARTMENT OF TRANSPORTATION

PIER 1 & PIER 2 REPAIR DETAILS
STRUCTURE NO. 006-0138

SHEET 23 OF 26 SHEETS

F.A.P. RTE.	SECTION	COUNTY	TOTAL SHEETS	SHEET NO.
646	122V-BR1	BUREAU	69	41
		CONTRACT NO. 66M48		
	ILLINOIS	FED. AID PROJECT		

12/17/2024 10:28:54 AM

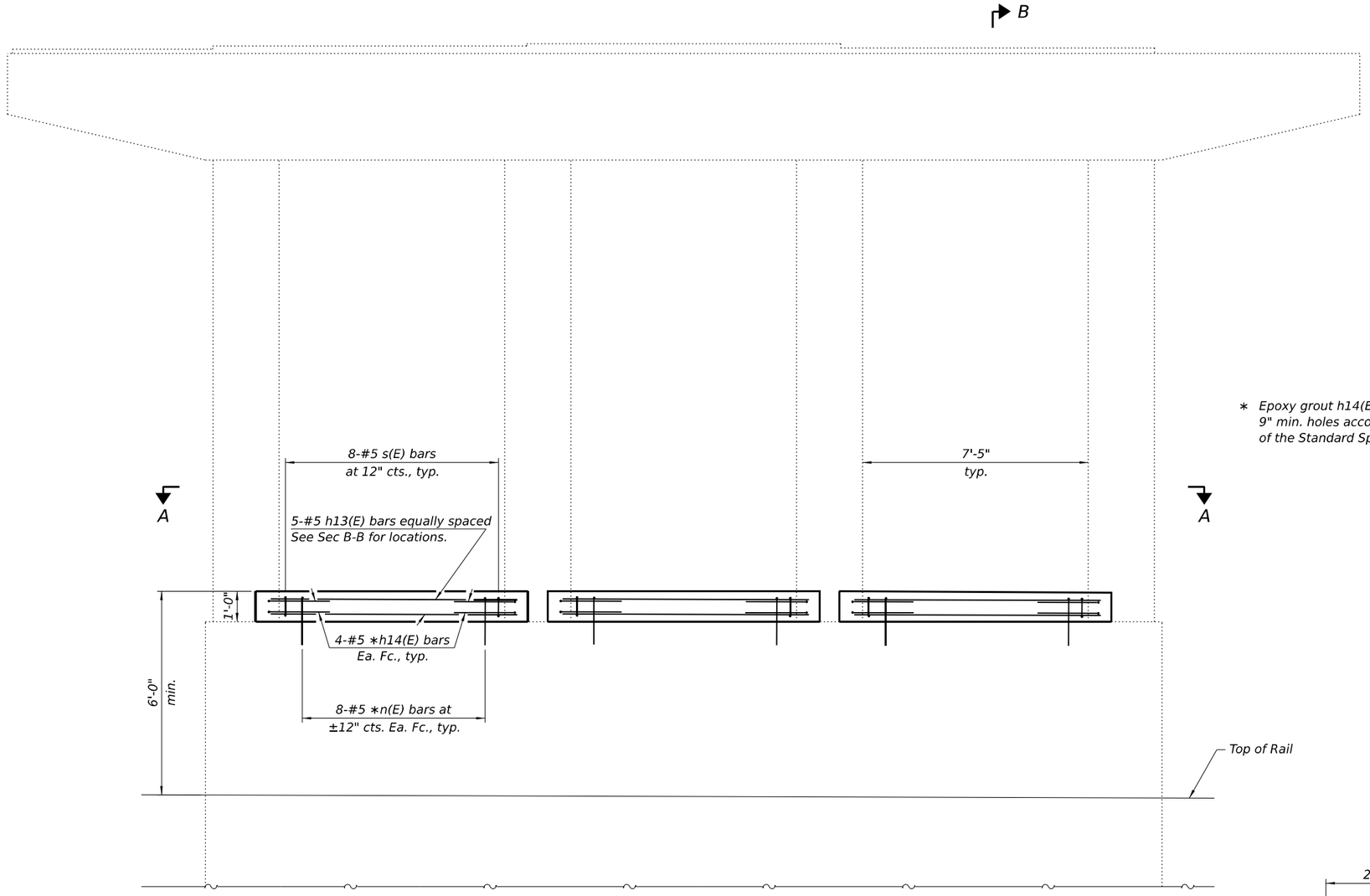

∗ Epoxy grout h14(E) and n(E) bars in 9" min. holes according to Article 584 of the Standard Specifications.

ELEVATION

(Pier 1 shown looking South, Pier 2 similar)

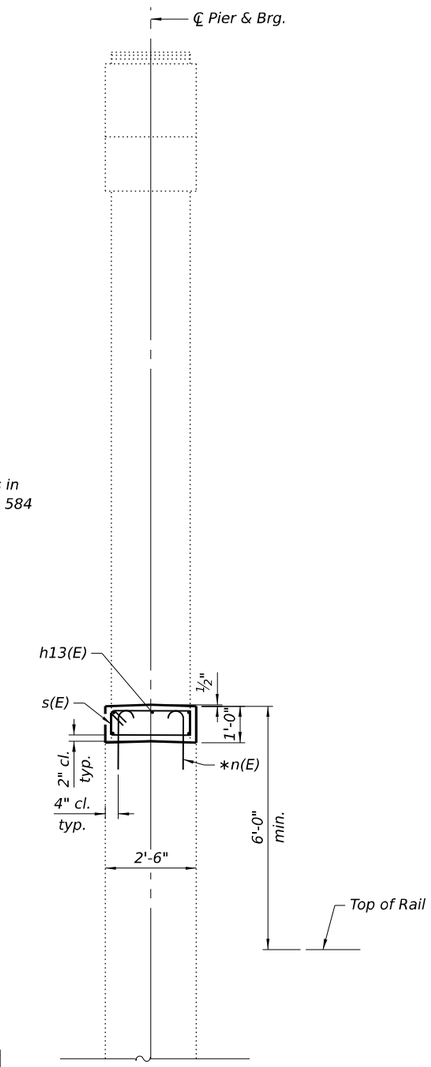

SECTION B-B

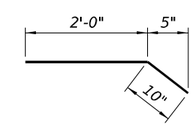

BAR h14(E)

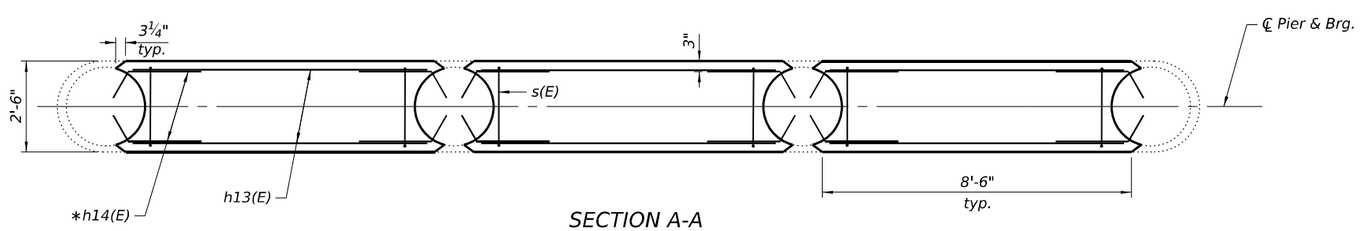

SECTION A-A

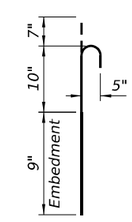

BAR n(E)

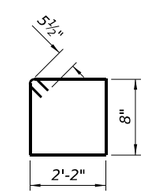

BAR s(E)

BILL OF MATERIAL

Bar	No.	Size	Length	Shape
h13(E)	30	#5	8'-0"	
h14(E)	48	#5	2'-10"	
n(E)	96	#5	2'-2"	
s(E)	48	#5	6'-7"	
Concrete Structures			Cu. Yd.	4.3
Reinforcement Bars, Epoxy Coated			Pound	940

MODEL: Default
FILE NAME: S:\2022\2221L092 PTB 205 - 24 D3 -Oates - Var PH I & II Projects\WO-5 BR Final Plans IL-40 over BNSF RR 006-0138\CADD\CADD Sheets\0060138-66M48-024-Pier 1&2 Crashwall D.dgn
12/17/2024 10:28:54 AM

QUIGG ENGINEERING INC

USER NAME = kortega	DESIGNED - KFO	REVISED -	
0060138-66M48-024-Pier 1&2 Crashwall D.dgn	CHECKED - DRB	REVISED -	
PLOT SCALE = 0.167 ' / in.	DRAWN - JDC	REVISED -	
PLOT DATE =	CHECKED - MDC	REVISED -	

STATE OF ILLINOIS
DEPARTMENT OF TRANSPORTATION

PIER 1 & PIER 2 CRASHWALL EXTENSION DETAILS
STRUCTURE NO. 006-0138

SHEET 24 OF 26 SHEETS

F.A.P. RTE.	SECTION	COUNTY	TOTAL SHEETS	SHEET NO.
646	122V-BR1	BUREAU	69	42
		CONTRACT NO. 66M48		
	ILLINOIS	FED. AID PROJECT		

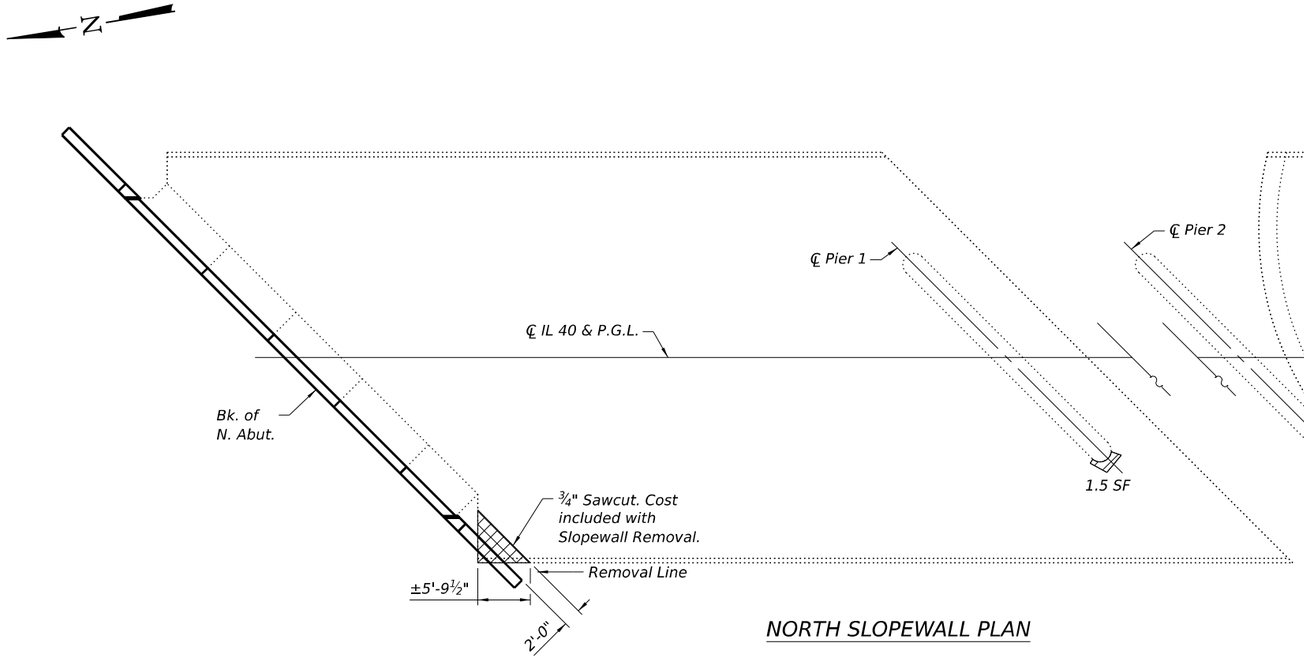

NORTH SLOPEWALL PLAN

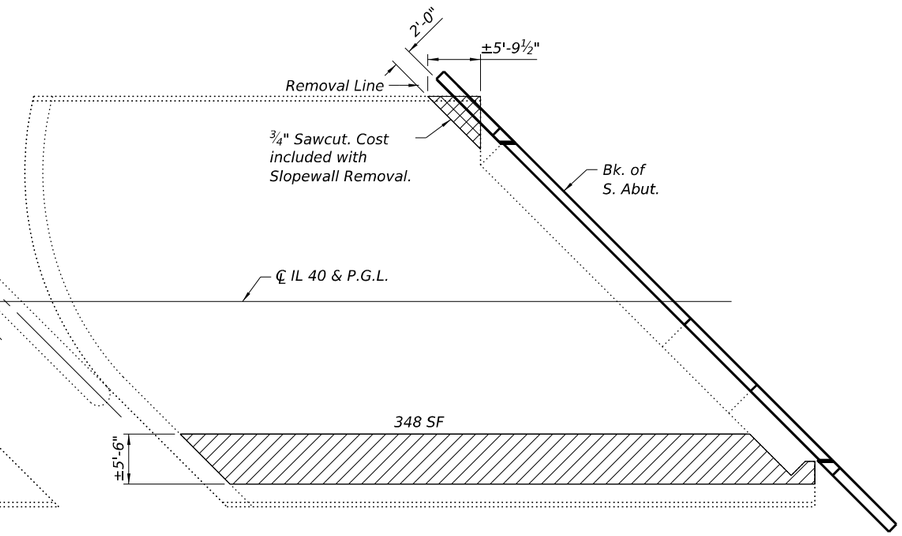

SOUTH SLOPEWALL PLAN

NOTES

1. Slope wall shall be reinforced with welded wire fabric 6 in. x 6 in. - W4.0, weighing 58 lbs. per 100 sq. ft.
2. Areas of slopewall repair are estimated based off the approved 2022 Bridge Condition Report. The engineer shall confirm limits of repairs in field at time of construction.
3. Cost of all materials and labor required for repairs are included with the cost for Slope Wall Repair measured in place in square yards.
4. Existing welded wire fabric shall be incorporated into repair areas. See special provision for additional details.

LEGEND

Limits of Slope Wall Repairs

Slope Wall Removal

SLOPEWALL BILL OF MATERIAL

ITEM	UNIT	TOTAL
Slope Wall Repair	Sq. Yd.	39
Slope Wall Removal	Sq. Yd.	4

QUIGG ENGINEERING INC

USER NAME = kortega	DESIGNED - KFO	REVISED -	
0060138-66M48-025-Slopewall Details.dgn	CHECKED - DRB	REVISED -	
PLOT SCALE = 16.667 ' / in.	DRAWN - JDC	REVISED -	
PLOT DATE =	CHECKED - MDC	REVISED -	

STATE OF ILLINOIS
DEPARTMENT OF TRANSPORTATION

SLOPEWALL REPAIR DETAILS
STRUCTURE NO. 006-0138

SHEET 25 OF 26 SHEETS

F.A.P. RTE.	SECTION	COUNTY	TOTAL SHEETS	SHEET NO.
646	122V-BR1	BUREAU	69	43
		CONTRACT NO. 66M48		
	ILLINOIS	FED. AID PROJECT		

MODEL: Default
FILE NAME: S:\2022\22IL092 PTB 205 - 24 D3 -Oates - Var PH I & II Projects\WO-5 BR Final Plans IL-40 over BNSF RR 006-0138\CADD\CADD Sheets\0060138-66M48-025-Slopewall Details.dgn
12/17/2024 10:28:55 AM

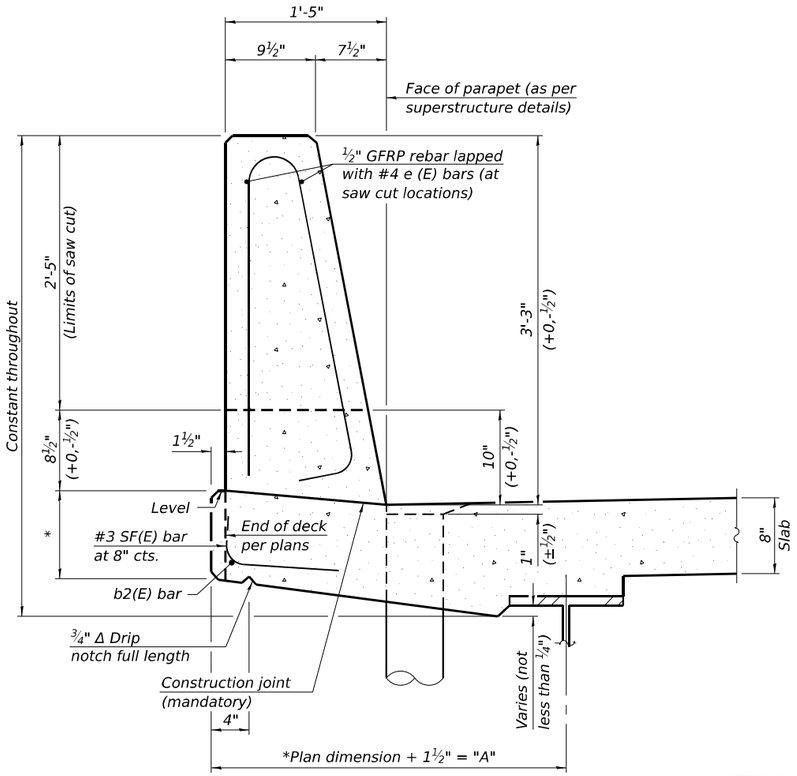

39" CONSTANT-SLOPE PARAPET SECTION

(Showing dimensions, d(E), and ½" Ø GFRP rebar)

STEEL SUPERSTRUCTURES

*See Superstructure Details.

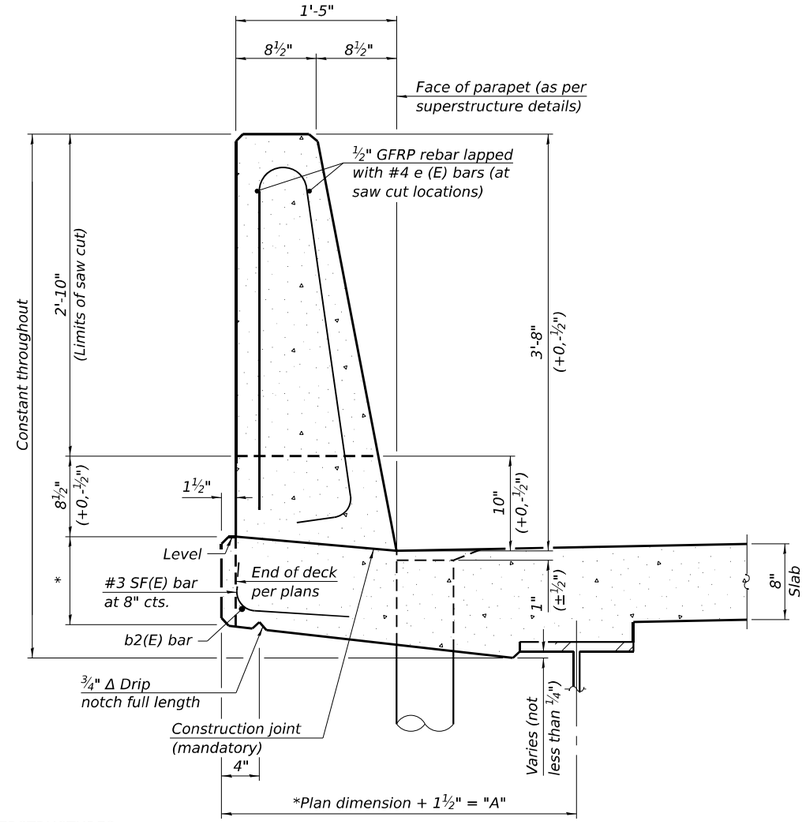

44" CONSTANT-SLOPE PARAPET SECTION

(Showing dimensions, d(E), and ½" Ø GFRP rebar)

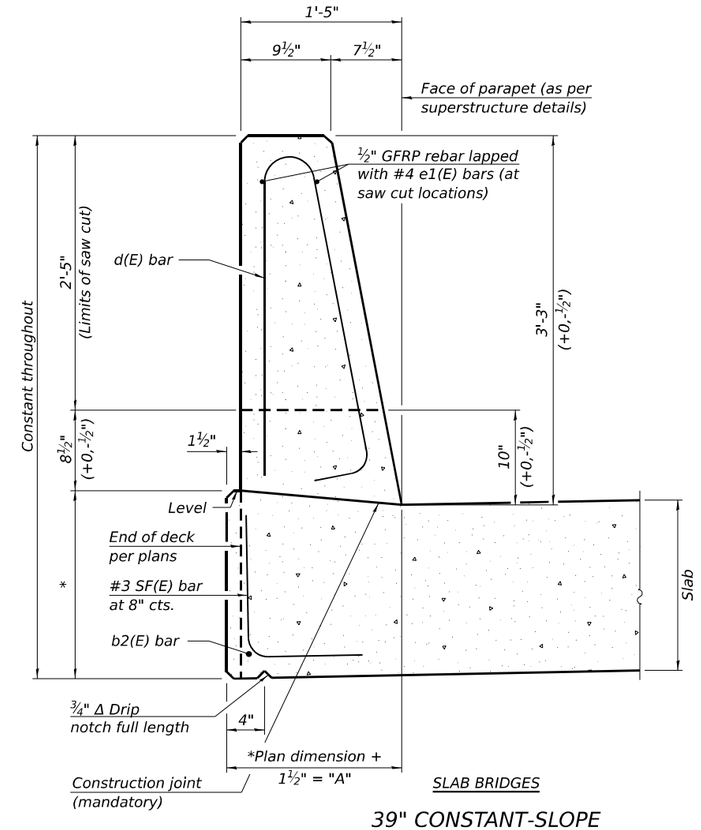

SLAB BRIDGES

39" CONSTANT-SLOPE PARAPET SECTION

(Showing dimensions, d(E), and ½" Ø GFRP rebar)

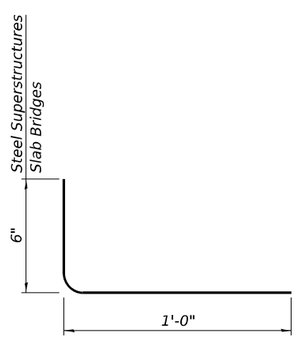

SF(E) BAR

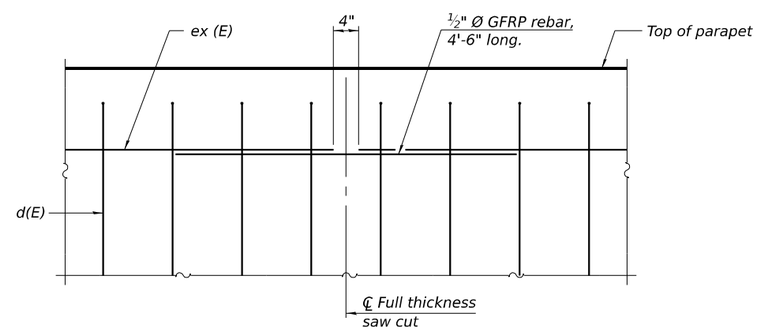

DETAIL - GFRP REBAR STIFFENING ELEVATION

(Place as shown in parapet section at each parapet joint location.)

Notes:
All dimensions shall remain the same as shown on superstructure details, except dimension "A" which is to be revised as shown.
Additional concrete needed to revise dimension "A" (39" and 44" parapets):
Steel Superstructures: 0.00348 cu. yds./ft.
Slab Bridge Superstructures: cu. yds./ft.
Place full depth aluminum sheets as shown on superstructure details.
Replace all cork joint filler locations with a full thickness saw cut.
Steel and slab superstructures shown. Other superstructure types similar.

SFP 39-44 10/27/2023

QUIGG ENGINEERING INC

USER NAME = kortega	DESIGNED - KFO	REVISED -	
0060138-66M48-026-Slipform.dgn	CHECKED - DRB	REVISED -	
PLOT SCALE = 0.167 ' / in.	DRAWN - JDC	REVISED -	
PLOT DATE =	CHECKED - MDC	REVISED -	

STATE OF ILLINOIS
DEPARTMENT OF TRANSPORTATION

CONCRETE PARAPET SLIPFORMING OPTION
STRUCTURE NO. 006-0138

SHEET 26 OF 26 SHEETS

F.A.P. RTE.	SECTION	COUNTY	TOTAL SHEETS	SHEET NO.
646	122V-BR1	BUREAU	69	44
		CONTRACT NO. 66M48		
		ILLINOIS FED. AID PROJECT		

MODEL: Default
FILE NAME: S:\2022\22IL092 PTB 205 - 24 D3 -Oates - Var PH I & II Projects\WO-5 BR Final Plans IL-40 over BNSF RR 006-0138\CADD\CADD Sheets\0060138-66M48-026-Slipform.dgn
12/17/2024 10:28:56 AM

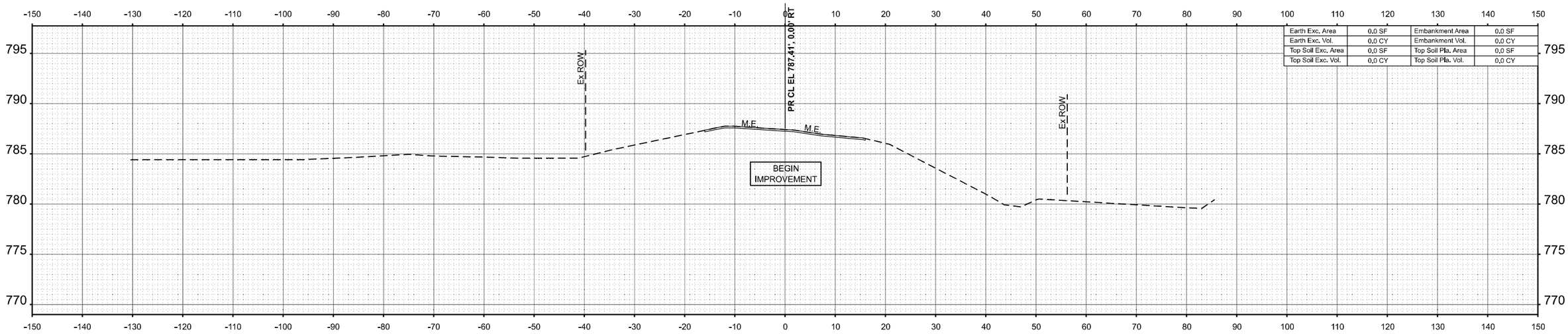

Earth Exc. Area	0.0 SF	Embankment Area	0.0 SF
Earth Exc. Vol.	0.0 CY	Embankment Vol.	0.0 CY
Top Soil Exc. Area	0.0 SF	Top Soil Pla. Area	0.0 SF
Top Soil Exc. Vol.	0.0 CY	Top Soil Pla. Vol.	0.0 CY

STA 161+00.00

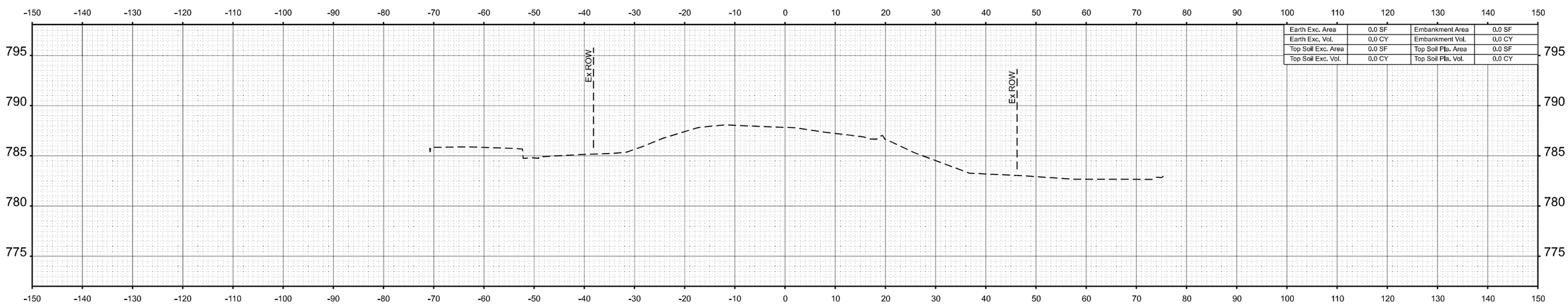

Earth Exc. Area	0.0 SF	Embankment Area	0.0 SF
Earth Exc. Vol.	0.0 CY	Embankment Vol.	0.0 CY
Top Soil Exc. Area	0.0 SF	Top Soil Pla. Area	0.0 SF
Top Soil Exc. Vol.	0.0 CY	Top Soil Pla. Vol.	0.0 CY

STA 160+50.00

FINAL SURVEY	BY	DATE
SURVEYED		
PLOTTED		
TEMPLATE		
AREAS		
AREAS CHECKED		
NOTE BOOK		
NO.		

ORIGINAL SURVEY	BY	DATE
SURVEYED		
PLOTTED		
TEMPLATE		
AREAS		
AREAS CHECKED		
NOTE BOOK		
NO.		

MODEL: Bdr-XSec
FILE NAME: J:\22209.05\04_CADD\CADD_Drawings\D366M48-Borders.dgn

SINGH + ASSOCIATES, INC.
CONSULTING ENGINEERS

USER NAME =	DESIGNED - LM	REVISED -	
	DRAWN - LM	REVISED -	
	CHECKED - JO	REVISED -	
PLOT DATE =	DATE - 01/06/2025	REVISED -	

STATE OF ILLINOIS
DEPARTMENT OF TRANSPORTATION

IL 40
CROSS SECTIONS

SCALE: 1"=10' | SHEET 1 OF 22 SHEETS | STA. 160+50.00 TO STA. 161+00.00

F.A.P RTE.	SECTION	COUNTY	TOTAL SHEETS	SHEET NO.
646	122V-BR1	BUREAU	69	45
		CONTRACT NO. 66M48		
		ILLINOIS	FED. AID PROJECT	

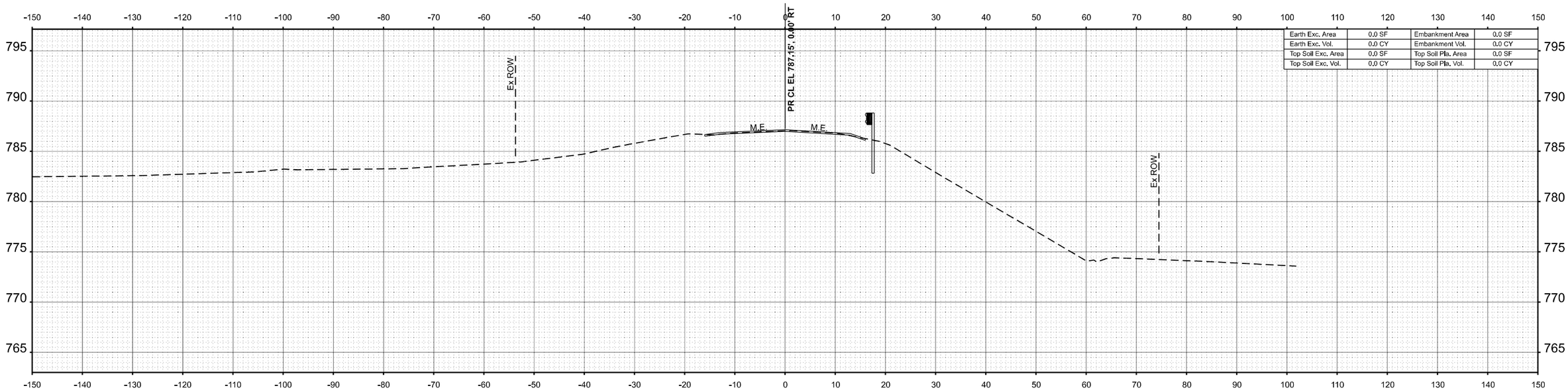

Earth Exc. Area	0.0 SF	Embankment Area	0.0 SF
Earth Exc. Vol.	0.0 CY	Embankment Vol.	0.0 CY
Top Soil Exc. Area	0.0 SF	Top Soil Pla. Area	0.0 SF
Top Soil Exc. Vol.	0.0 CY	Top Soil Pla. Vol.	0.0 CY

STA 162+00.00

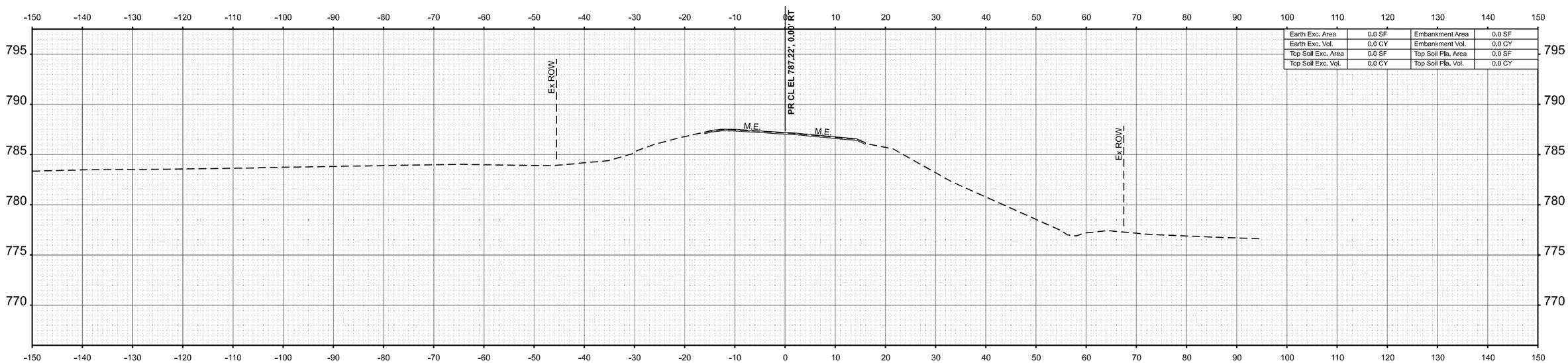

Earth Exc. Area	0.0 SF	Embankment Area	0.0 SF
Earth Exc. Vol.	0.0 CY	Embankment Vol.	0.0 CY
Top Soil Exc. Area	0.0 SF	Top Soil Pla. Area	0.0 SF
Top Soil Exc. Vol.	0.0 CY	Top Soil Pla. Vol.	0.0 CY

STA 161+50.00

FINAL SURVEY		BY	DATE
NOTE BOOK	SURVEYED		
	PLOTTED		
	TEMPLATE		
	AREAS		
NO.	AREAS CHECKED		

ORIGINAL SURVEY		BY	DATE
NOTE BOOK	SURVEYED		
	PLOTTED		
	TEMPLATE		
	AREAS		
NO.	AREAS CHECKED		

MODEL: Bdr-XSec
FILE NAME: J:\22209.05\04_CADD\CADD_Drawings\D366M48-Borders.dgn

SINGH
SINGH + ASSOCIATES, INC.
CONSULTING ENGINEERS

USER NAME =	DESIGNED - LM	REVISED -	
	DRAWN - LM	REVISED -	
	CHECKED - JO	REVISED -	
PLOT DATE =	DATE - 01/06/2025	REVISED -	

STATE OF ILLINOIS
DEPARTMENT OF TRANSPORTATION

IL 40
CROSS SECTIONS

SCALE: 1"=10' | SHEET 2 OF 22 SHEETS | STA. 161+50.00 TO STA. 162+00.00

F.A.P RTE.	SECTION	COUNTY	TOTAL SHEETS	SHEET NO.
646	122V-BR1	BUREAU	69	46
		CONTRACT NO. 66M48		
		ILLINOIS	FED. AID PROJECT	

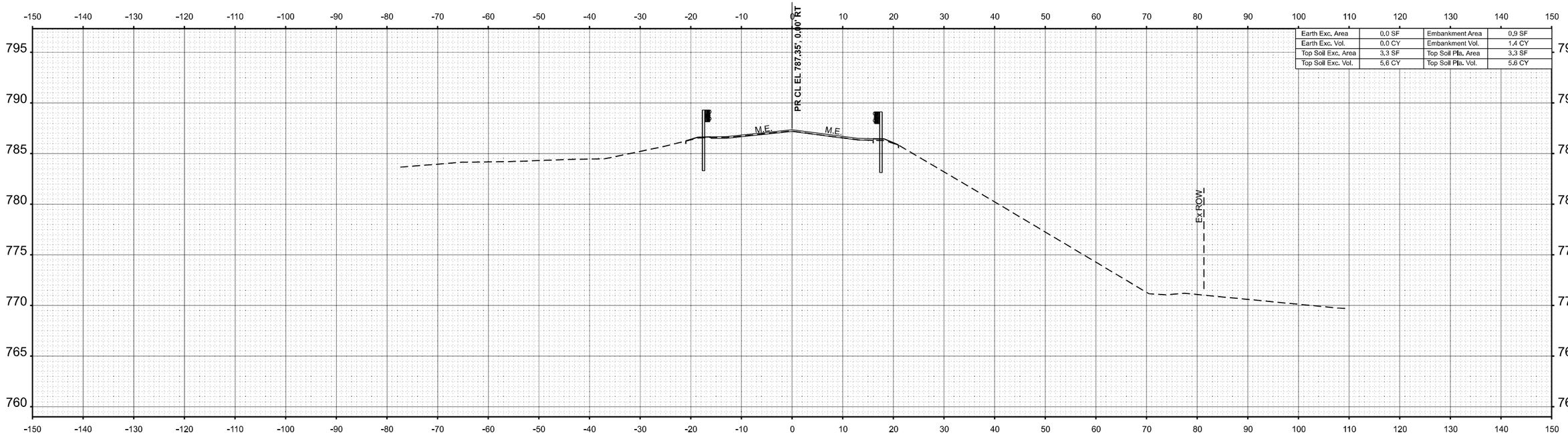

Earth Exc. Area	0.0 SF	Embankment Area	0.9 SF
Earth Exc. Vol.	0.0 CY	Embankment Vol.	1.4 CY
Top Soil Exc. Area	3.3 SF	Top Soil Pla. Area	3.3 SF
Top Soil Exc. Vol.	5.6 CY	Top Soil Pla. Vol.	5.6 CY

STA 163+00.00

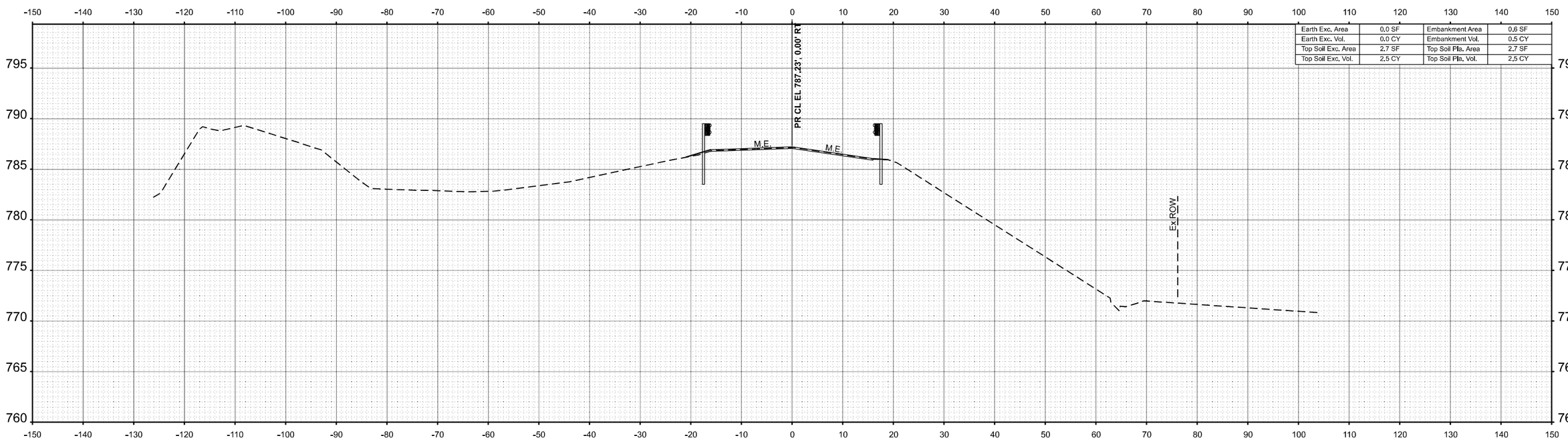

Earth Exc. Area	0.0 SF	Embankment Area	0.6 SF
Earth Exc. Vol.	0.0 CY	Embankment Vol.	0.5 CY
Top Soil Exc. Area	2.7 SF	Top Soil Pla. Area	2.7 SF
Top Soil Exc. Vol.	2.5 CY	Top Soil Pla. Vol.	2.5 CY

STA 162+50.00

FINAL SURVEY	BY	DATE
SURVEYED		
PLOTTED		
TEMPLATE		
AREAS		
AREAS CHECKED		
NOTE BOOK		
NO.		

ORIGINAL SURVEY	BY	DATE
SURVEYED		
PLOTTED		
TEMPLATE		
AREAS		
AREAS CHECKED		
NOTE BOOK		
NO.		

MODEL: Bdt-XSec
FILE NAME: J:\22209.05\04_CADD\CADD_Drawings\D366M48-Borders.dgn

SINGH
SINGH + ASSOCIATES, INC.
CONSULTING ENGINEERS

USER NAME =	DESIGNED - LM	REVISED -	
	DRAWN - LM	REVISED -	
	CHECKED - JO	REVISED -	
PLOT DATE =	DATE - 01/06/2025	REVISED -	

STATE OF ILLINOIS
DEPARTMENT OF TRANSPORTATION

IL 40
CROSS SECTIONS

SCALE: 1"=10' | SHEET 3 OF 22 SHEETS | STA. 162+50.00 TO STA. 163+00.00

F.A.P RTE.	SECTION	COUNTY	TOTAL SHEETS	SHEET NO.
646	122V-BR1	BUREAU	69	47
		CONTRACT NO. 66M48		
		ILLINOIS	FED. AID PROJECT	

FINAL SURVEY		BY	DATE
NOTE BOOK	SURVEYED		
	PLOTTED		
	TEMPLATE		
	AREAS		
NO.	AREAS CHECKED		

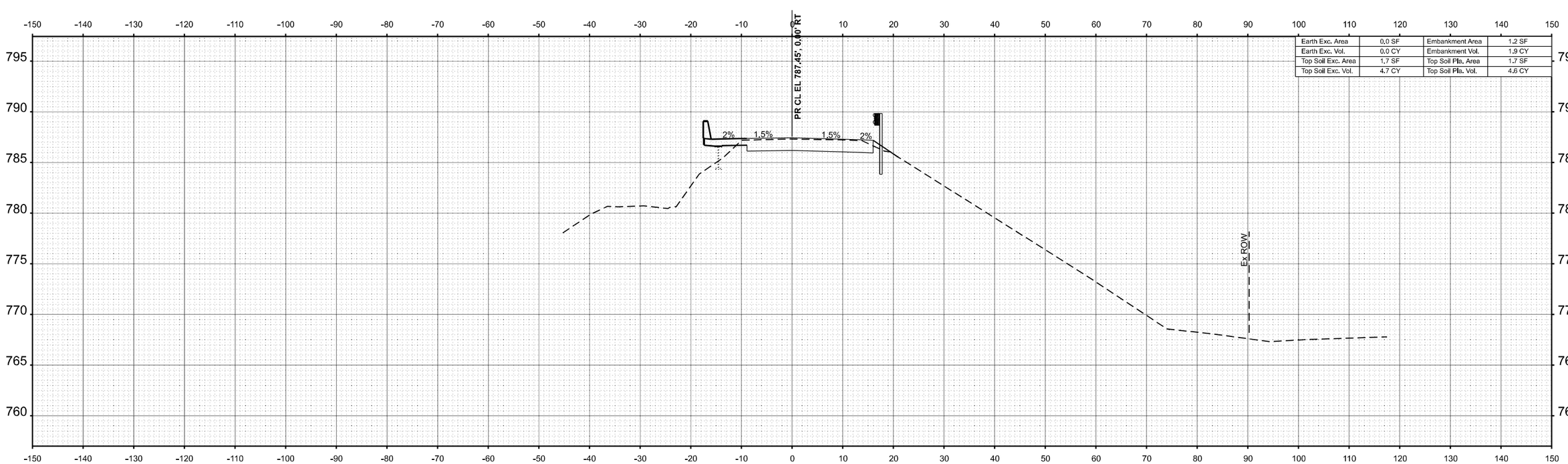

Earth Exc. Area	0.0 SF	Embankment Area	1.2 SF
Earth Exc. Vol.	0.0 CY	Embankment Vol.	1.9 CY
Top Soil Exc. Area	1.7 SF	Top Soil Pla. Area	1.7 SF
Top Soil Exc. Vol.	4.7 CY	Top Soil Pla. Vol.	4.6 CY

STA 163+50.00

ORIGINAL SURVEY		BY	DATE
NOTE BOOK	SURVEYED		
	PLOTTED		
	TEMPLATE		
	AREAS		
NO.	AREAS CHECKED		

MODEL: Bdt-XSec
FILE NAME: J:\22208.05\04_CADD\CADD_Drawings\D366M48-Borders.dgn

SINGH
SINGH + ASSOCIATES, INC.
CONSULTING ENGINEERS

USER NAME =	DESIGNED - LM	REVISED -	
	DRAWN - LM	REVISED -	
	CHECKED - JO	REVISED -	
PLOT DATE =	DATE - 01/06/2025	REVISED -	

STATE OF ILLINOIS
DEPARTMENT OF TRANSPORTATION

IL 40
CROSS SECTIONS

SCALE: 1"=10' | SHEET 4 OF 22 SHEETS | STA. 163+50.00 TO STA. 163+50.00

F.A.P RTE.	SECTION	COUNTY	TOTAL SHEETS	SHEET NO.
646	122V-BR1	BUREAU	69	48
		CONTRACT NO. 66M48		
		ILLINOIS	FED. AID PROJECT	

FINAL SURVEY		BY	DATE
NOTE BOOK NO.	SURVEYED		
	PLOTTED		
	TEMPLATE		
	AREAS		
	AREAS CHECKED		

ORIGINAL SURVEY		BY	DATE
NOTE BOOK NO.	SURVEYED		
	PLOTTED		
	TEMPLATE		
	AREAS		
	AREAS CHECKED		

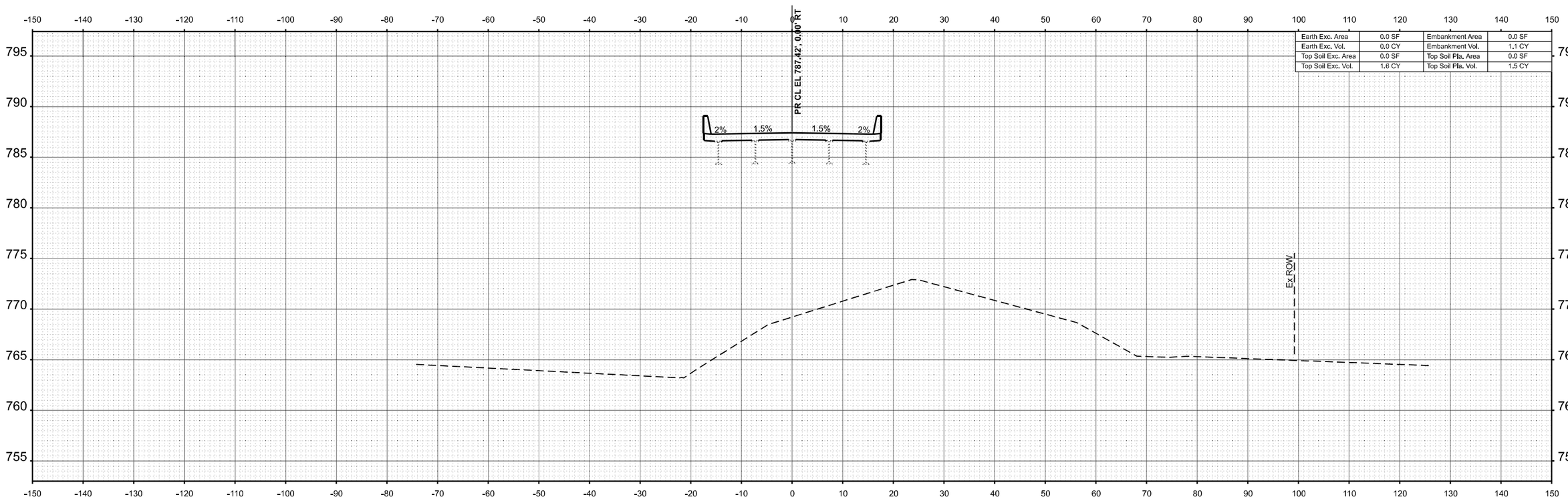

Earth Exc. Area	0.0 SF	Embankment Area	0.0 SF
Earth Exc. Vol.	0.0 CY	Embankment Vol.	1.1 CY
Top Soil Exc. Area	0.0 SF	Top Soil Pla. Area	0.0 SF
Top Soil Exc. Vol.	1.6 CY	Top Soil Pla. Vol.	1.5 CY

STA 164+00.00

MODEL: Bdr-XSec
FILE NAME: J:\22209.05\04_CADD\CADD_Drawings\D366M48-Borders.dgn

SINGH
SINGH + ASSOCIATES, INC.
CONSULTING ENGINEERS

USER NAME =	DESIGNED - LM	REVISED -	
	DRAWN - LM	REVISED -	
	CHECKED - JO	REVISED -	
PLOT DATE =	DATE - 01/06/2025	REVISED -	

STATE OF ILLINOIS
DEPARTMENT OF TRANSPORTATION

IL 40
CROSS SECTIONS

SCALE: 1"=10' | SHEET 5 OF 22 SHEETS | STA. 164+00.00 TO STA. 164+00.00

F.A.P RTE.	SECTION	COUNTY	TOTAL SHEETS	SHEET NO.
646	122V-BR1	BUREAU	69	49
		CONTRACT NO. 66M48		
		ILLINOIS	FED. AID PROJECT	

FINAL SURVEY		BY	DATE
NOTE BOOK NO.	SURVEYED ____ PLOTTED ____ TEMPLATE ____ AREAS ____ AREAS CHECKED ____		

ORIGINAL SURVEY		BY	DATE
NOTE BOOK NO.	SURVEYED ____ PLOTTED ____ TEMPLATE ____ AREAS ____ AREAS CHECKED ____		

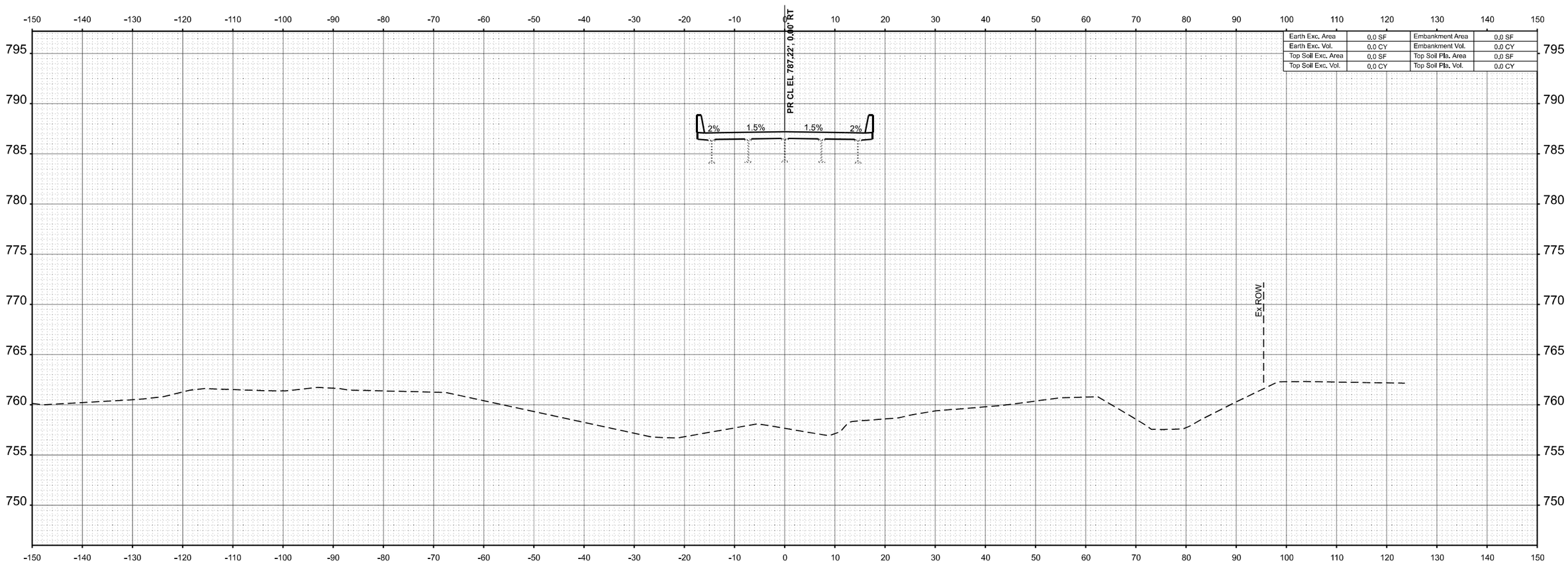

Earth Exc. Area	0.0 SF	Embankment Area	0.0 SF
Earth Exc. Vol.	0.0 CY	Embankment Vol.	0.0 CY
Top Soil Exc. Area	0.0 SF	Top Soil Pla. Area	0.0 SF
Top Soil Exc. Vol.	0.0 CY	Top Soil Pla. Vol.	0.0 CY

STA 164+50.00

MODEL: Bdr-XSec
FILE NAME: J:\22209.05\04_CADD\CADD_Drawings\D366M48-Borders.dgn

SINGH
SINGH + ASSOCIATES, INC.
CONSULTING ENGINEERS

USER NAME =	DESIGNED - LM	REVISED -	
	DRAWN - LM	REVISED -	
	CHECKED - JO	REVISED -	
PLOT DATE =	DATE - 01/06/2025	REVISED -	

STATE OF ILLINOIS
DEPARTMENT OF TRANSPORTATION

IL 40
CROSS SECTIONS

SCALE: 1"=10' | SHEET 6 OF 22 SHEETS | STA. 164+50.00 TO STA. 164+50.00

F.A.P RTE.	SECTION	COUNTY	TOTAL SHEETS	SHEET NO.
646	122V-BR1	BUREAU	69	50
		CONTRACT NO. 66M48		
		ILLINOIS	FED. AID PROJECT	

FINAL SURVEY		BY	DATE
NOTE BOOK NO.	SURVEYED		
	PLOTTED		
	TEMPLATE		
	AREAS		
	AREAS CHECKED		

ORIGINAL SURVEY		BY	DATE
NOTE BOOK NO.	SURVEYED		
	PLOTTED		
	TEMPLATE		
	AREAS		
	AREAS CHECKED		

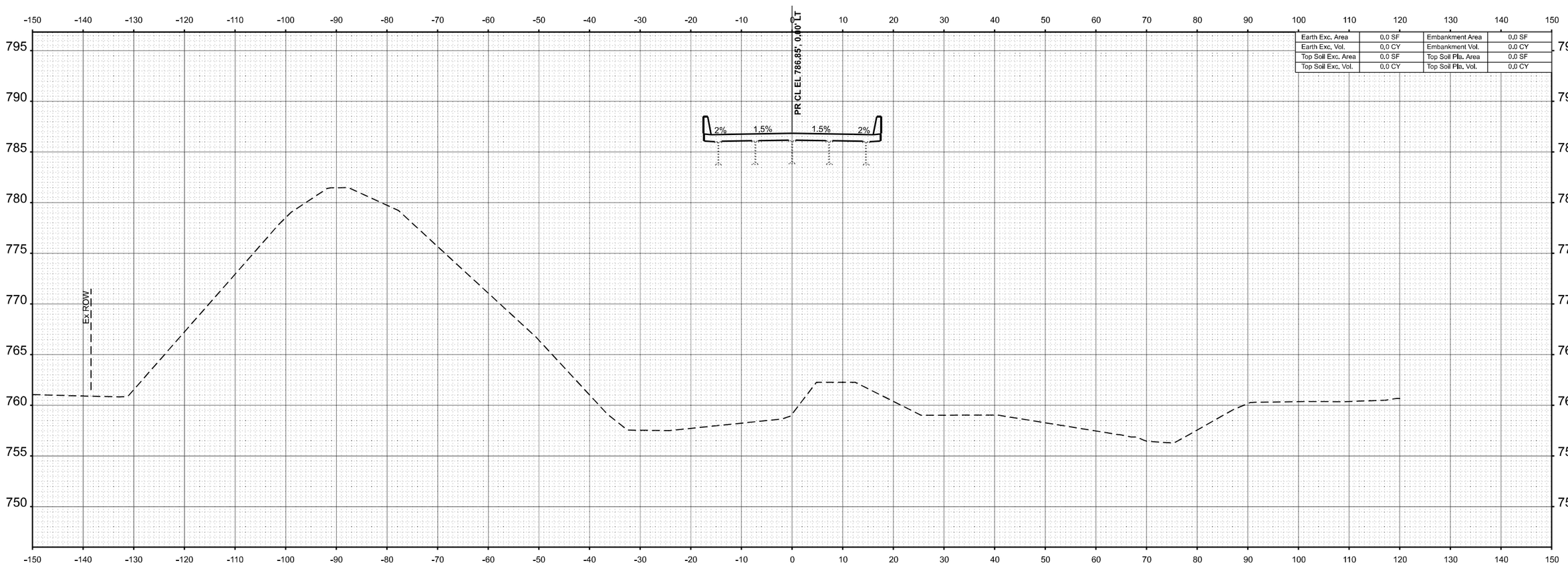

Earth Exc. Area	0.0 SF	Embankment Area	0.0 SF
Earth Exc. Vol.	0.0 CY	Embankment Vol.	0.0 CY
Top Soil Exc. Area	0.0 SF	Top Soil Pla. Area	0.0 SF
Top Soil Exc. Vol.	0.0 CY	Top Soil Pla. Vol.	0.0 CY

STA 165+00.00

MODEL: Bdr-XSec
FILE NAME: J:\22209.05\04_CADD\CADD_Drawings\D366M48-Borders.dgn

SINGH
SINGH + ASSOCIATES, INC.
CONSULTING ENGINEERS

USER NAME =	DESIGNED - LM	REVISED -	
	DRAWN - LM	REVISED -	
	CHECKED - JO	REVISED -	
PLOT DATE =	DATE - 01/06/2025	REVISED -	

STATE OF ILLINOIS
DEPARTMENT OF TRANSPORTATION

IL 40
CROSS SECTIONS

SCALE: 1"=10' | SHEET 7 OF 22 SHEETS | STA. 165+00.00 TO STA. 165+00.00

F.A.P RTE.	SECTION	COUNTY	TOTAL SHEETS	SHEET NO.
646	122V-BR1	BUREAU	69	51
		CONTRACT NO. 66M48		
		ILLINOIS	FED. AID PROJECT	

FINAL SURVEY		BY	DATE
NOTE BOOK NO.	SURVEYED		
	PLOTTED		
	TEMPLATE		
	AREAS		
	AREAS CHECKED		

ORIGINAL SURVEY		BY	DATE
NOTE BOOK NO.	SURVEYED		
	PLOTTED		
	TEMPLATE		
	AREAS		
	AREAS CHECKED		

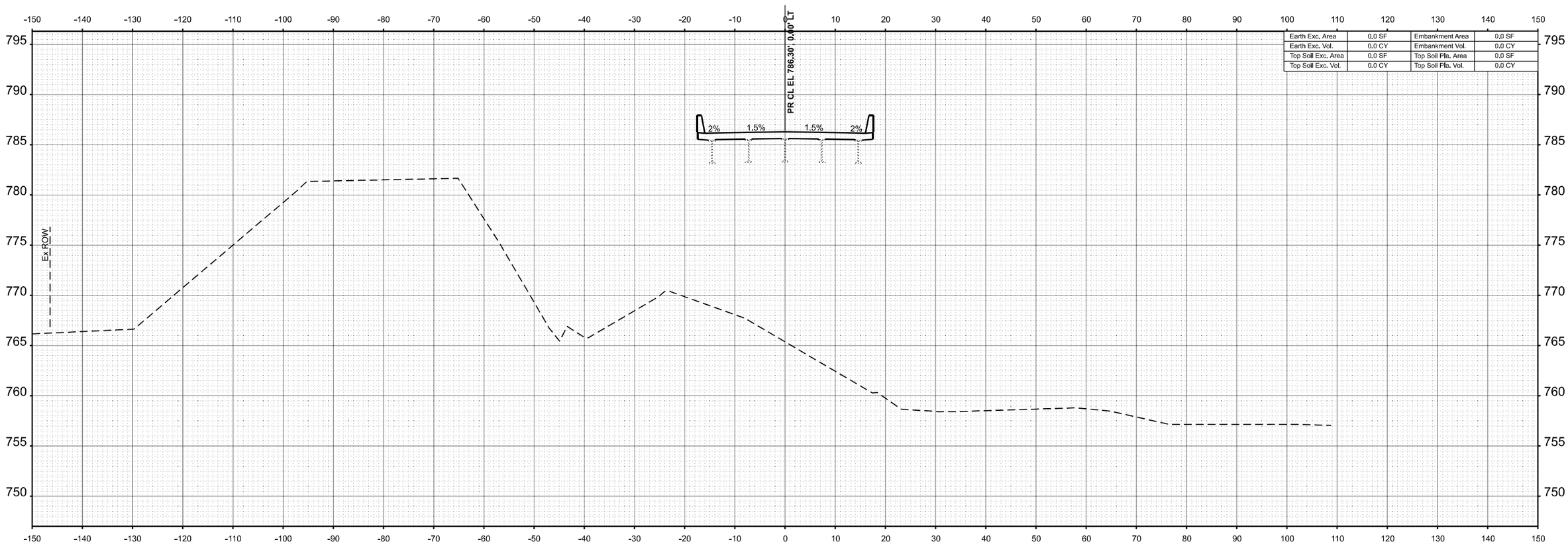

Earth Exc. Area	0.0 SF	Embankment Area	0.0 SF
Earth Exc. Vol.	0.0 CY	Embankment Vol.	0.0 CY
Top Soil Exc. Area	0.0 SF	Top Soil Pla. Area	0.0 SF
Top Soil Exc. Vol.	0.0 CY	Top Soil Pla. Vol.	0.0 CY

STA 165+50.00

MODEL: Bdr-XSec
FILE NAME: J:\22209.05\04_CADD\CADD_Drawings\D366M48-Borders.dgn

SINGH
SINGH + ASSOCIATES, INC.
CONSULTING ENGINEERS

USER NAME =	DESIGNED - LM	REVISED -	
	DRAWN - LM	REVISED -	
	CHECKED - JO	REVISED -	
PLOT DATE =	DATE - 01/06/2025	REVISED -	

STATE OF ILLINOIS
DEPARTMENT OF TRANSPORTATION

IL 40
CROSS SECTIONS

SCALE: 1"=10' | SHEET 8 OF 22 SHEETS | STA. 165+50.00 TO STA. 165+50.00

F.A.P RTE.	SECTION	COUNTY	TOTAL SHEETS	SHEET NO.
646	122V-BR1	BUREAU	69	52
		CONTRACT NO. 66M48		
		ILLINOIS	FED. AID PROJECT	

FINAL SURVEY		BY	DATE
NOTE BOOK NO.	SURVEYED		
	PLOTTED		
	TEMPLATE		
	AREAS		
	AREAS CHECKED		

ORIGINAL SURVEY		BY	DATE
NOTE BOOK NO.	SURVEYED		
	PLOTTED		
	TEMPLATE		
	AREAS		
	AREAS CHECKED		

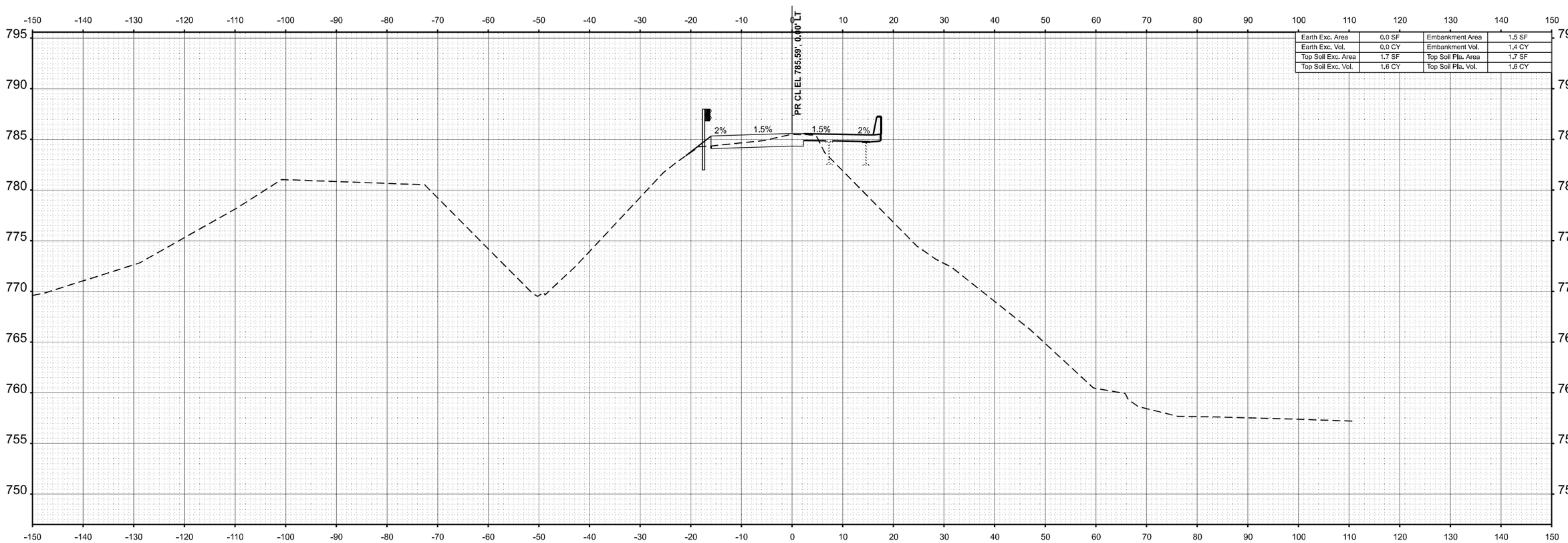

Earth Exc. Area	0.0 SF	Embankment Area	1.5 SF
Earth Exc. Vol.	0.0 CY	Embankment Vol.	1.4 CY
Top Soil Exc. Area	1.7 SF	Top Soil Pla. Area	1.7 SF
Top Soil Exc. Vol.	1.6 CY	Top Soil Pla. Vol.	1.6 CY

STA 166+00.00

MODEL: Bdr-XSec
FILE NAME: J:\22209.05\04_CADD\CADD_Drawings\D366M48-Borders.dgn

SINGH
SINGH + ASSOCIATES, INC.
CONSULTING ENGINEERS

USER NAME =	DESIGNED - LM	REVISED -	
	DRAWN - LM	REVISED -	
	CHECKED - JO	REVISED -	
PLOT DATE =	DATE - 01/06/2025	REVISED -	

STATE OF ILLINOIS
DEPARTMENT OF TRANSPORTATION

IL 40
CROSS SECTIONS

SCALE: 1"=10' | SHEET 9 OF 22 SHEETS | STA. 166+00.00 TO STA. 166+00.00

F.A.P RTE.	SECTION	COUNTY	TOTAL SHEETS	SHEET NO.
646	122V-BR1	BUREAU	69	53
		CONTRACT NO. 66M48		
		ILLINOIS	FED. AID PROJECT	

Earth Exc. Area	0.0 SF	Embankment Area	4.7 SF
Earth Exc. Vol.	0.0 CY	Embankment Vol.	5.7 CY
Top Soil Exc. Area	5.0 SF	Top Soil Pla. Area	4.9 SF
Top Soil Exc. Vol.	6.2 CY	Top Soil Pla. Vol.	6.1 CY

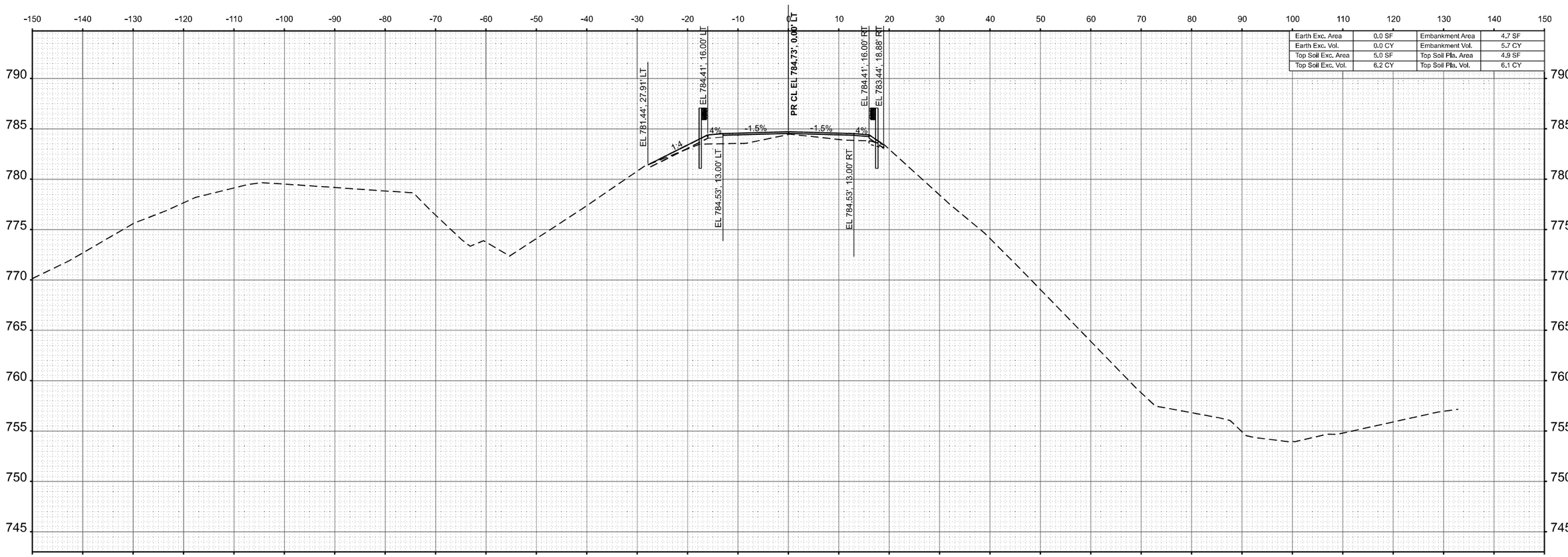

STA 166+50.00

FINAL SURVEY	BY	DATE
SURVEYED		
PLOTTED		
TEMPLATE		
AREAS		
AREAS CHECKED		
NOTE BOOK		
NO.		

ORIGINAL SURVEY	BY	DATE
SURVEYED		
PLOTTED		
TEMPLATE		
AREAS		
AREAS CHECKED		
NOTE BOOK		
NO.		

MODEL: Bdr-XSec
FILE NAME: J:\22209.05\04_CADD\CADD_Drawings\D366M48-Borders.dgn

SINGH
SINGH + ASSOCIATES, INC.
CONSULTING ENGINEERS

USER NAME =	DESIGNED - LM	REVISED -	
	DRAWN - LM	REVISED -	
	CHECKED - JO	REVISED -	
PLOT DATE =	DATE - 01/06/2025	REVISED -	

STATE OF ILLINOIS
DEPARTMENT OF TRANSPORTATION

IL 40
CROSS SECTIONS

SCALE: 1"=10' | SHEET 10 OF 22 SHEETS | STA. 166+50.00 TO STA. 166+50.00

F.A.P RTE.	SECTION	COUNTY	TOTAL SHEETS	SHEET NO.
646	122V-BR1	BUREAU	69	54
		CONTRACT NO. 66M48		
		ILLINOIS	FED. AID PROJECT	

Earth Exc. Area	7.5 SF	Embankment Area	1.0 SF
Earth Exc. Vol.	6.9 CY	Embankment Vol.	5.3 CY
Top Soil Exc. Area	1.2 SF	Top Soil Pla. Area	1.2 SF
Top Soil Exc. Vol.	5.8 CY	Top Soil Pla. Vol.	5.7 CY

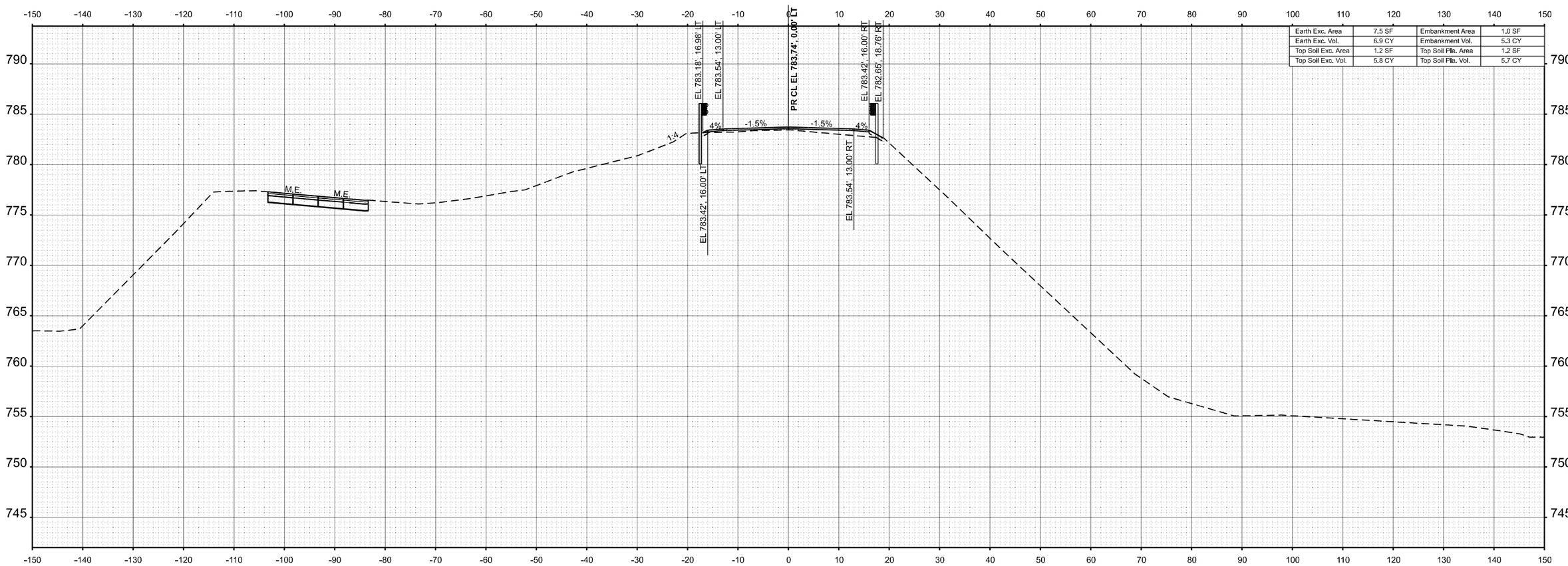

STA 167+00.00

FINAL SURVEY	BY	DATE
SURVEYED		
PLOTTED		
TEMPLATE		
AREAS		
AREAS CHECKED		
NOTE BOOK		
NO.		

ORIGINAL SURVEY	BY	DATE
SURVEYED		
PLOTTED		
TEMPLATE		
AREAS		
AREAS CHECKED		
NOTE BOOK		
NO.		

MODEL: Bdr-XSec
FILE NAME: J:\22209.05\04_CADD\CADD_Drawings\D366M48-Borders.dgn

SINGH
SINGH + ASSOCIATES, INC.
CONSULTING ENGINEERS

USER NAME =	DESIGNED - LM	REVISED -	
	DRAWN - LM	REVISED -	
	CHECKED - JO	REVISED -	
PLOT DATE =	DATE - 01/06/2025	REVISED -	

STATE OF ILLINOIS
DEPARTMENT OF TRANSPORTATION

IL 40
CROSS SECTIONS

SCALE: 1"=10' | SHEET 11 OF 22 SHEETS | STA. 167+00.00 TO STA. 167+00.00

F.A.P RTE.	SECTION	COUNTY	TOTAL SHEETS	SHEET NO.
646	122V-BR1	BUREAU	69	55

CONTRACT NO. 66M48

ILLINOIS | FED. AID PROJECT

FINAL SURVEY		BY	DATE
NOTE BOOK NO.	SURVEYED		
	PLOTTED		
	TEMPLATE		
	AREAS		
	AREAS CHECKED		

ORIGINAL SURVEY		BY	DATE
NOTE BOOK NO.	SURVEYED		
	PLOTTED		
	TEMPLATE		
	AREAS		
	AREAS CHECKED		

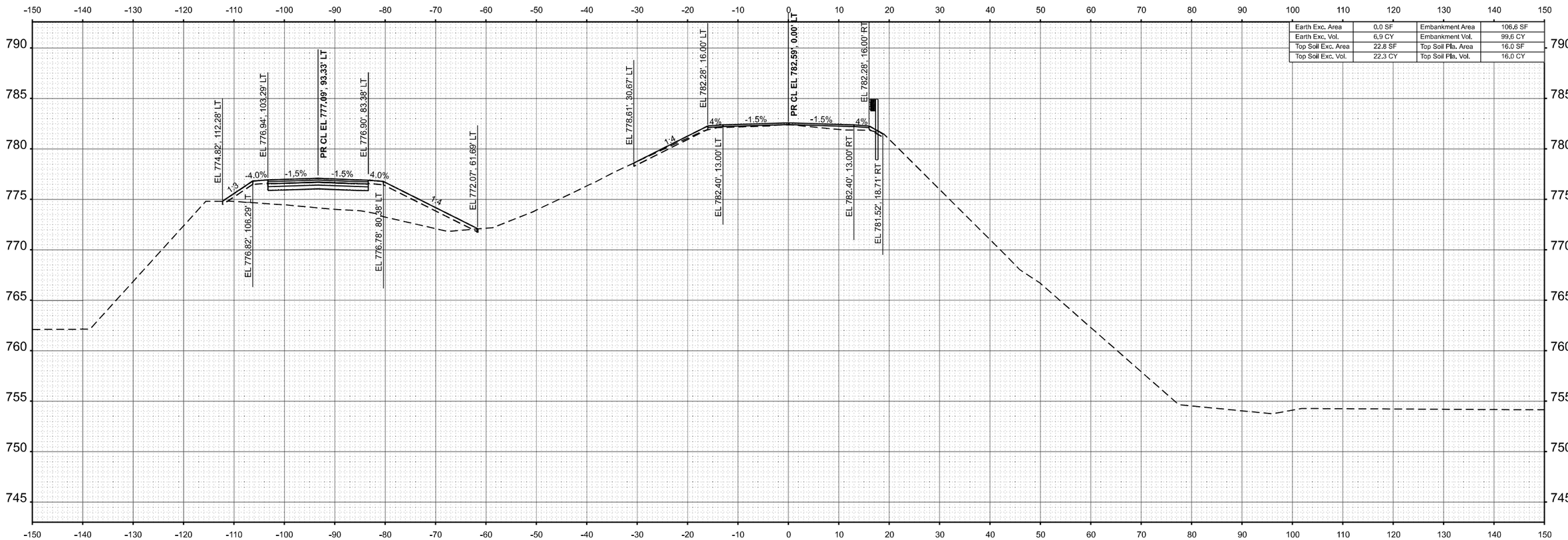

Earth Exc. Area	0.0 SF	Embankment Area	106.6 SF
Earth Exc. Vol.	6.9 CY	Embankment Vol.	99.6 CY
Top Soil Exc. Area	22.8 SF	Top Soil Pla. Area	16.0 SF
Top Soil Exc. Vol.	22.3 CY	Top Soil Pla. Vol.	16.0 CY

STA 167+50.00

MODEL: Bdt-XSec
FILE NAME: J:\22208.05\04_CADD\CADD_Drawings\D366M48-Borders.dgn

SINGH
SINGH + ASSOCIATES, INC.
CONSULTING ENGINEERS

USER NAME =	DESIGNED - LM	REVISED -	
	DRAWN - LM	REVISED -	
	CHECKED - JO	REVISED -	
PLOT DATE =	DATE - 01/06/2025	REVISED -	

STATE OF ILLINOIS
DEPARTMENT OF TRANSPORTATION

IL 40
CROSS SECTIONS

SCALE: 1"=10' | SHEET 12 OF 22 SHEETS | STA. 167+50.00 TO STA. 167+50.00

F.A.P RTE.	SECTION	COUNTY	TOTAL SHEETS	SHEET NO.
646	122V-BR1	BUREAU	69	56
		CONTRACT NO. 66M48		
		ILLINOIS	FED. AID PROJECT	

Earth Exc. Area	0.0 SF	Embankment Area	298.2 SF
Earth Exc. Vol.	0.0 CY	Embankment Vol.	172.4 CY
Top Soil Exc. Area	35.2 SF	Top Soil Pla. Area	27.6 SF
Top Soil Exc. Vol.	24.7 CY	Top Soil Pla. Vol.	18.6 CY

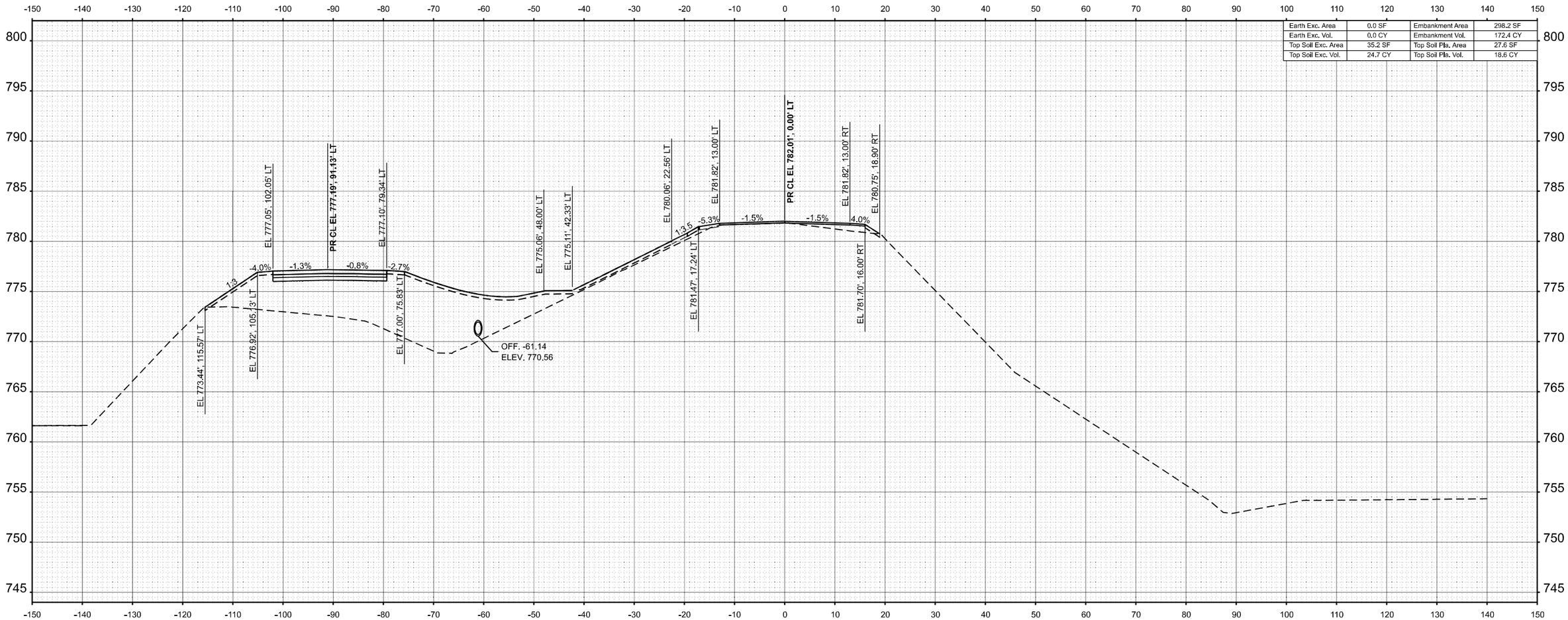

STA 167+73.00

SINGH SINGH + ASSOCIATES, INC. CONSULTING ENGINEERS	USER NAME =	DESIGNED - LM	REVISED -	STATE OF ILLINOIS DEPARTMENT OF TRANSPORTATION	IL 40 CROSS SECTIONS	F.A.P RTE. 646	SECTION 122V-BR1
		DRAWN - LM	REVISED -			COUNTY BUREAU	TOTAL SHEETS 69 / SHEET NO. 57
		CHECKED - JO	REVISED -			CONTRACT NO. 66M48	
	PLOT DATE =	DATE - 01/06/2025	REVISED -		SCALE: 1"=10' / SHEET 13 OF 22 SHEETS / STA. 167+73.00 TO STA. 167+73.00	ILLINOIS	FED. AID PROJECT

FINAL SURVEY		BY	DATE
NOTE BOOK	SURVEYED PLOTTED TEMPLATE AREAS AREAS CHECKED		
NO.			

ORIGINAL SURVEY		BY	DATE
NOTE BOOK	SURVEYED PLOTTED TEMPLATE AREAS AREAS CHECKED		
NO.			

MODEL: Bdr-XSec
FILE NAME: J:\22209.05\04_CADD\CADD_Drawings\D366\M48-Borders.dgn

FINAL SURVEY		BY	DATE
NOTE BOOK NO.	SURVEYED PLOTTED TEMPLATE AREAS AREAS CHECKED		

ORIGINAL SURVEY		BY	DATE
NOTE BOOK NO.	SURVEYED PLOTTED TEMPLATE AREAS AREAS CHECKED		

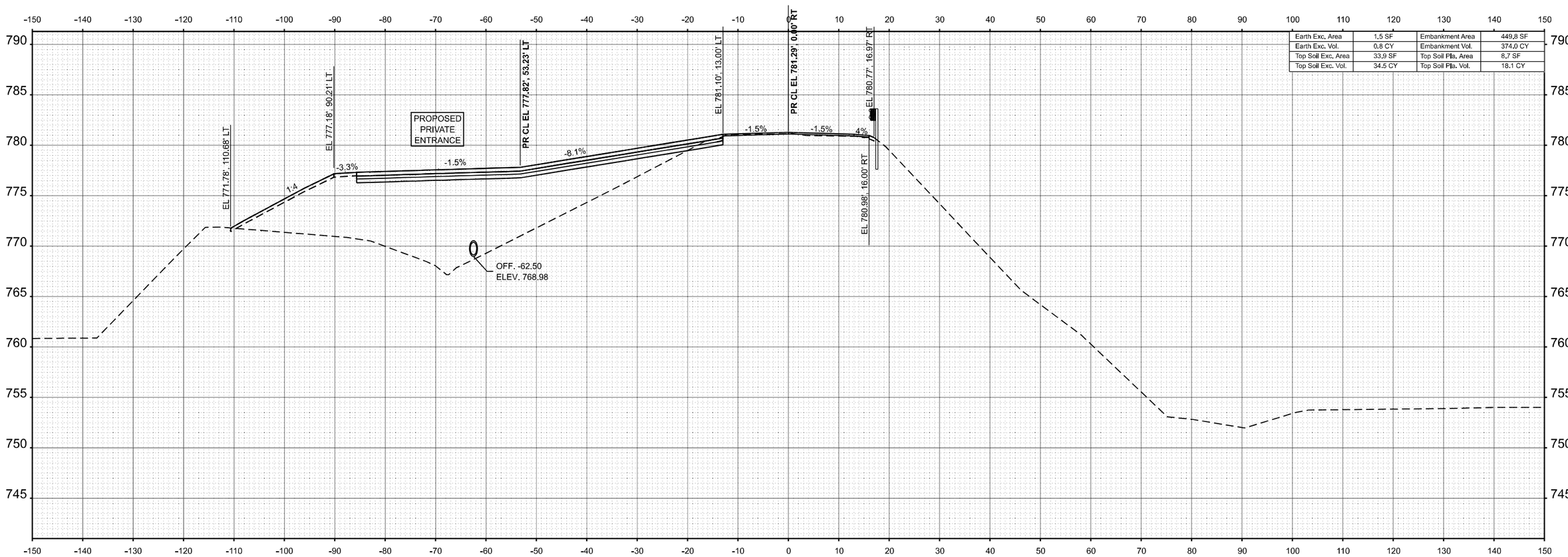

Earth Exc. Area	1,5 SF	Embankment Area	449,8 SF
Earth Exc. Vol.	0.8 CY	Embankment Vol.	374.0 CY
Top Soil Exc. Area	33,9 SF	Top Soil Pla. Area	8,7 SF
Top Soil Exc. Vol.	34.5 CY	Top Soil Pla. Vol.	18.1 CY

STA 168+00.00

MODEL: Bdr-XSec
FILE NAME: J:\22209.05\04_CADD\CADD_Drawings\D366M48-Borders.dgn

SINGH
SINGH + ASSOCIATES, INC.
CONSULTING ENGINEERS

USER NAME =	DESIGNED - LM	REVISED -	
	DRAWN - LM	REVISED -	
	CHECKED - JO	REVISED -	
PLOT DATE =	DATE - 01/06/2025	REVISED -	

STATE OF ILLINOIS
DEPARTMENT OF TRANSPORTATION

IL 40
CROSS SECTIONS

SCALE: 1"=10' | SHEET 14 OF 22 SHEETS | STA. 168+00.00 TO STA. 168+00.00

F.A.P RTE.	SECTION	COUNTY	TOTAL SHEETS	SHEET NO.
646	122V-BR1	BUREAU	69	58
		CONTRACT NO. 66M48		
		ILLINOIS	FED. AID PROJECT	

Earth Exc. Area	1.8 SF	Embankment Area	425.8 SF
Earth Exc. Vol.	0.7 CY	Embankment Vol.	194.6 CY
Top Soil Exc. Area	31.5 SF	Top Soil Pla. Area	18.0 SF
Top Soil Exc. Vol.	14.5 CY	Top Soil Pla. Vol.	5.9 CY

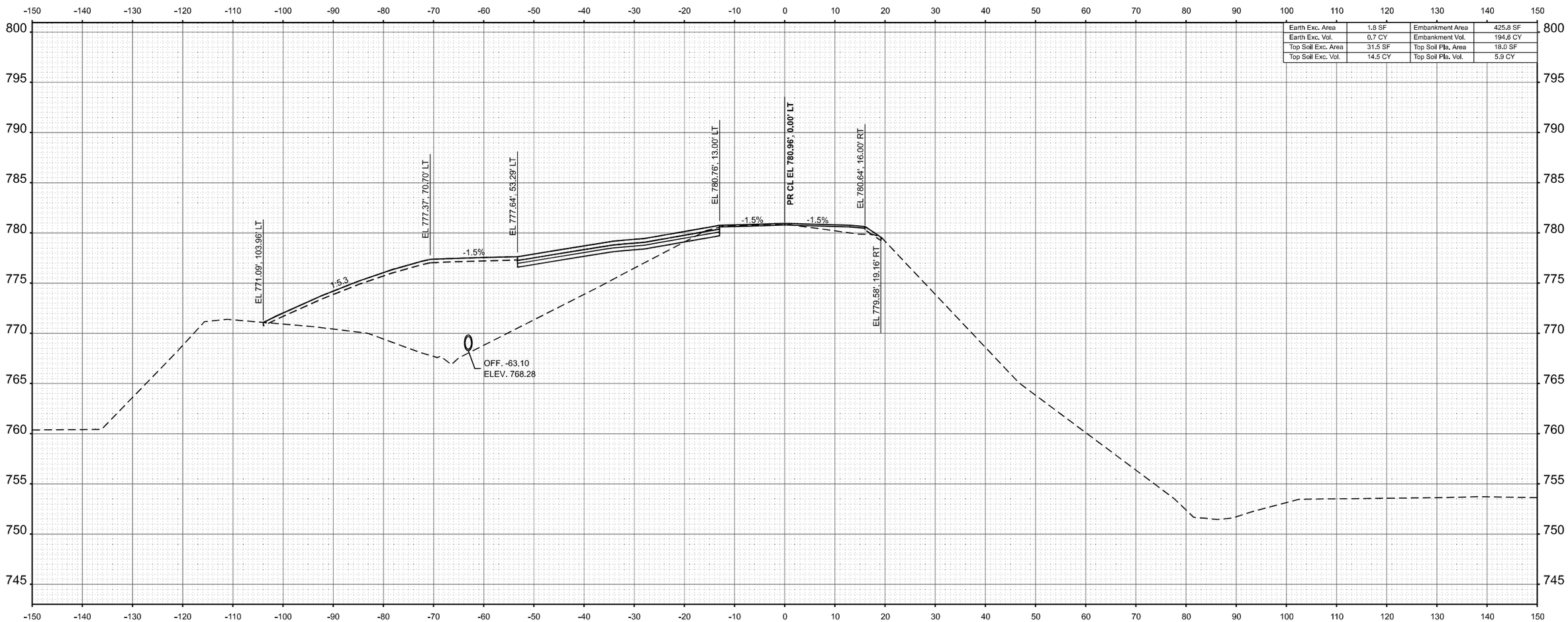

STA 168+12.00

FINAL SURVEY		BY	DATE
NOTE BOOK	SURVEYED		
	PLOTTED		
	TEMPLATE		
	AREAS		
NO.	AREAS CHECKED		

ORIGINAL SURVEY		BY	DATE
NOTE BOOK	SURVEYED		
	PLOTTED		
	TEMPLATE		
	AREAS		
NO.	AREAS CHECKED		

MODEL: Bdr-XSec
FILE NAME: J:\22209.05\04_CADD\CADD_Drawings\D366M48-Borders.dgn

SINGH
SINGH + ASSOCIATES, INC.
CONSULTING ENGINEERS

USER NAME =	DESIGNED - LM	REVISED -	
	DRAWN - LM	REVISED -	
	CHECKED - JO	REVISED -	
PLOT DATE =	DATE - 01/06/2025	REVISED -	

STATE OF ILLINOIS
DEPARTMENT OF TRANSPORTATION

IL 40
CROSS SECTIONS

SCALE: 1"=10' | SHEET 15 OF 22 SHEETS | STA. 168+12.00 TO STA. 168+12.00

F.A.P RTE.	SECTION	COUNTY	TOTAL SHEETS	SHEET NO.
646	122V-BR1	BUREAU	69	59
		CONTRACT NO. 66M48		
		ILLINOIS	FED. AID PROJECT	

FINAL SURVEY		BY	DATE
NOTE BOOK NO.	SURVEYED		
	PLOTTED		
	TEMPLATE		
	AREAS		
	AREAS CHECKED		

ORIGINAL SURVEY		BY	DATE
NOTE BOOK NO.	SURVEYED		
	PLOTTED		
	TEMPLATE		
	AREAS		
	AREAS CHECKED		

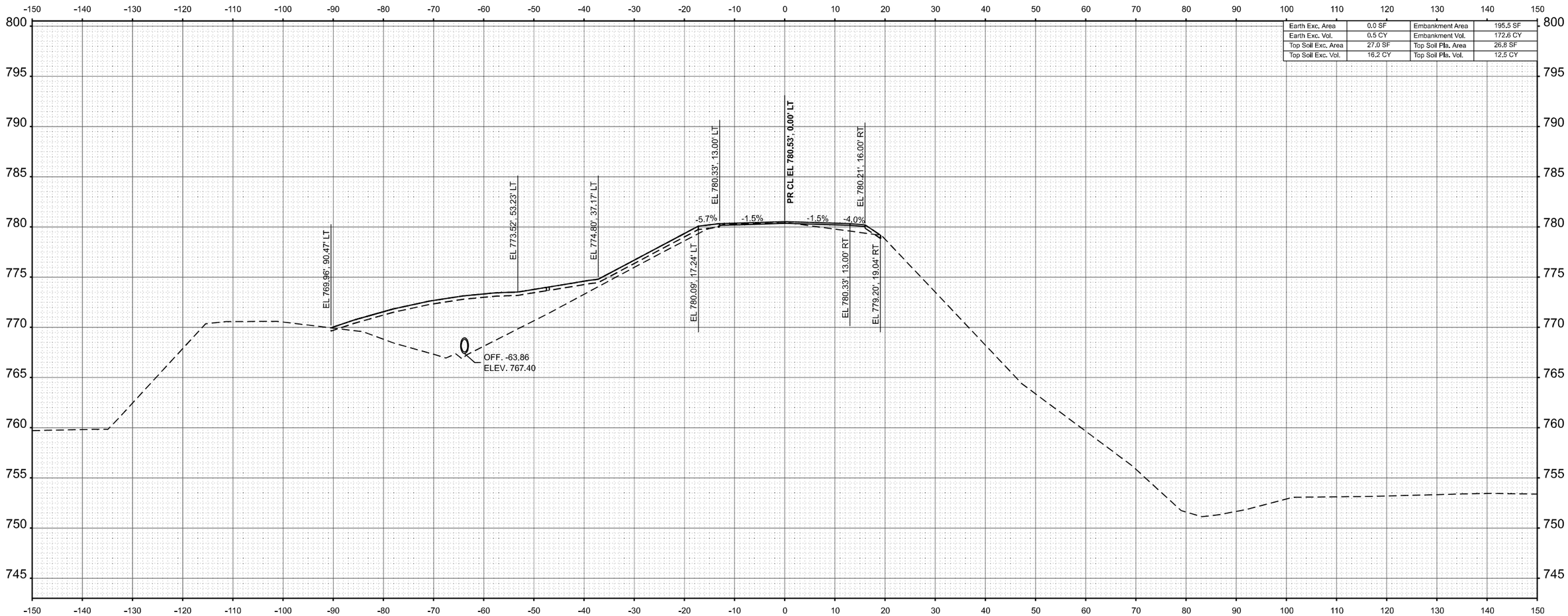

Earth Exc. Area	0.0 SF	Embankment Area	195.5 SF
Earth Exc. Vol.	0.5 CY	Embankment Vol.	172.6 CY
Top Soil Exc. Area	27.0 SF	Top Soil Pla. Area	26.8 SF
Top Soil Exc. Vol.	16.2 CY	Top Soil Pla. Vol.	12.5 CY

STA 168+27.00

MODEL: Bdr-XSec
FILE NAME: J:\22209.05\04_CADD\CADD_Drawings\D366M48-Borders.dgn

SINGH
SINGH + ASSOCIATES, INC.
CONSULTING ENGINEERS

USER NAME =	DESIGNED - LM	REVISED -	
	DRAWN - LM	REVISED -	
	CHECKED - JO	REVISED -	
PLOT DATE =	DATE - 01/06/2025	REVISED -	

STATE OF ILLINOIS
DEPARTMENT OF TRANSPORTATION

IL 40
CROSS SECTIONS

SCALE: 1"=10' | SHEET 16 OF 22 SHEETS | STA. 168+27.00 TO STA. 168+27.00

F.A.P RTE.	SECTION	COUNTY	TOTAL SHEETS	SHEET NO.
646	122V-BR1	BUREAU	69	60
		CONTRACT NO. 66M48		
		ILLINOIS	FED. AID PROJECT	

Earth Exc. Area	0.0 SF
Earth Exc. Vol.	0.0 CY
Top Soil Exc. Area	21.3 SF
Top Soil Exc. Vol.	11.6 CY
Embankment Area	67.0 SF
Embankment Vol.	63.2 CY
Top Soil Pla. Area	21.6 SF
Top Soil Pla. Vol.	11.7 CY

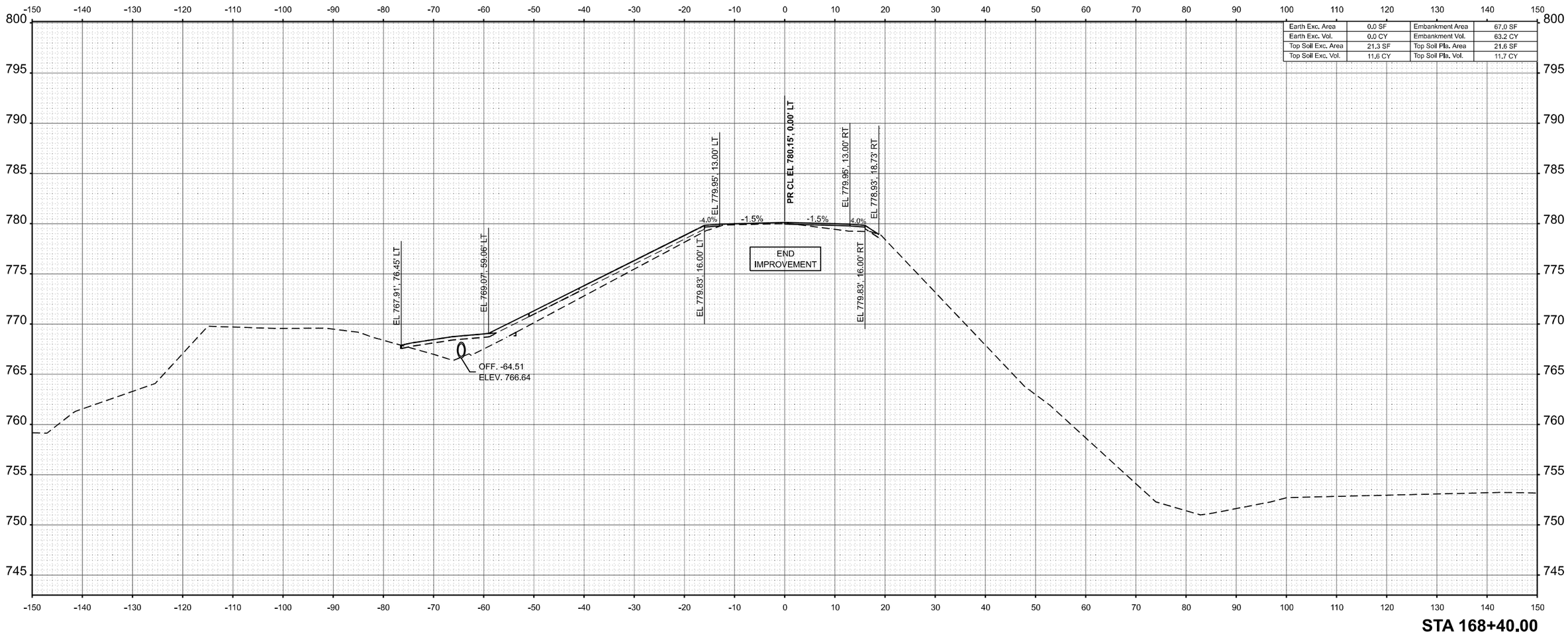

FINAL SURVEY		BY	DATE
NOTE BOOK	SURVEYED		
	PLOTTED		
	TEMPLATE		
	AREAS		
NO.	AREAS CHECKED		

ORIGINAL SURVEY		BY	DATE
NOTE BOOK	SURVEYED		
	PLOTTED		
	TEMPLATE		
	AREAS		
NO.	AREAS CHECKED		

MODEL: Bdr-XSec
FILE NAME: J:\22209.05\04_CADD\CADD_Drawings\D366M48-Borders.dgn

SINGH
SINGH + ASSOCIATES, INC.
CONSULTING ENGINEERS

USER NAME =	DESIGNED - LM	REVISED -	
	DRAWN - LM	REVISED -	
	CHECKED - JO	REVISED -	
PLOT DATE =	DATE - 01/06/2025	REVISED -	

STATE OF ILLINOIS
DEPARTMENT OF TRANSPORTATION

IL 40
CROSS SECTIONS

SCALE: 1"=10' | SHEET 17 OF 22 SHEETS | STA. 168+40.00 TO STA. 168+40.00

F.A.P RTE.	SECTION	COUNTY	TOTAL SHEETS	SHEET NO.
646	122V-BR1	BUREAU	69	61
		CONTRACT NO. 66M48		
		ILLINOIS	FED. AID PROJECT	

FINAL SURVEY		BY	DATE
NOTE BOOK	SURVEYED		
	PLOTTED		
	TEMPLATE		
	AREAS		
NO.	AREAS CHECKED		

ORIGINAL SURVEY		BY	DATE
NOTE BOOK	SURVEYED		
	PLOTTED		
	TEMPLATE		
	AREAS		
NO.	AREAS CHECKED		

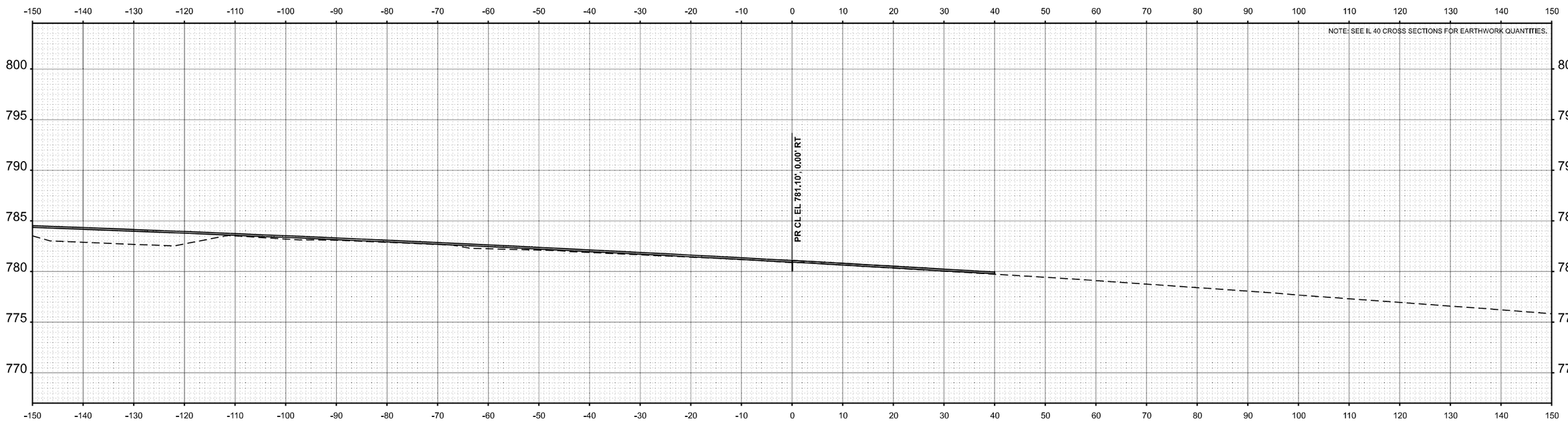

STA 10+00.00

MODEL: Bdt-XSec
FILE NAME: J:\22209.05\04_CADD\CADD_Drawings\D366M48-Borders.dgn

SINGH
SINGH + ASSOCIATES, INC.
CONSULTING ENGINEERS

USER NAME =	DESIGNED - LM	REVISED -
	DRAWN - LM	REVISED -
	CHECKED - JO	REVISED -
PLOT DATE =	DATE - 01/06/2025	REVISED -

STATE OF ILLINOIS
DEPARTMENT OF TRANSPORTATION

DRIVEWAY
CROSS SECTIONS

SCALE: 1"=10' | SHEET 18 OF 22 SHEETS | STA. 10+00.00 TO STA. 10+00.00

F.A.P RTE.	SECTION	COUNTY	TOTAL SHEETS	SHEET NO.
646	122V-BR1	BUREAU	69	62
		CONTRACT NO. 66M48		
		ILLINOIS	FED. AID PROJECT	

FINAL SURVEY		BY	DATE
NOTE BOOK NO.	SURVEYED		
	PLOTTED		
	TEMPLATE		
	AREAS		
	AREAS CHECKED		

ORIGINAL SURVEY		BY	DATE
NOTE BOOK NO.	SURVEYED		
	PLOTTED		
	TEMPLATE		
	AREAS		
	AREAS CHECKED		

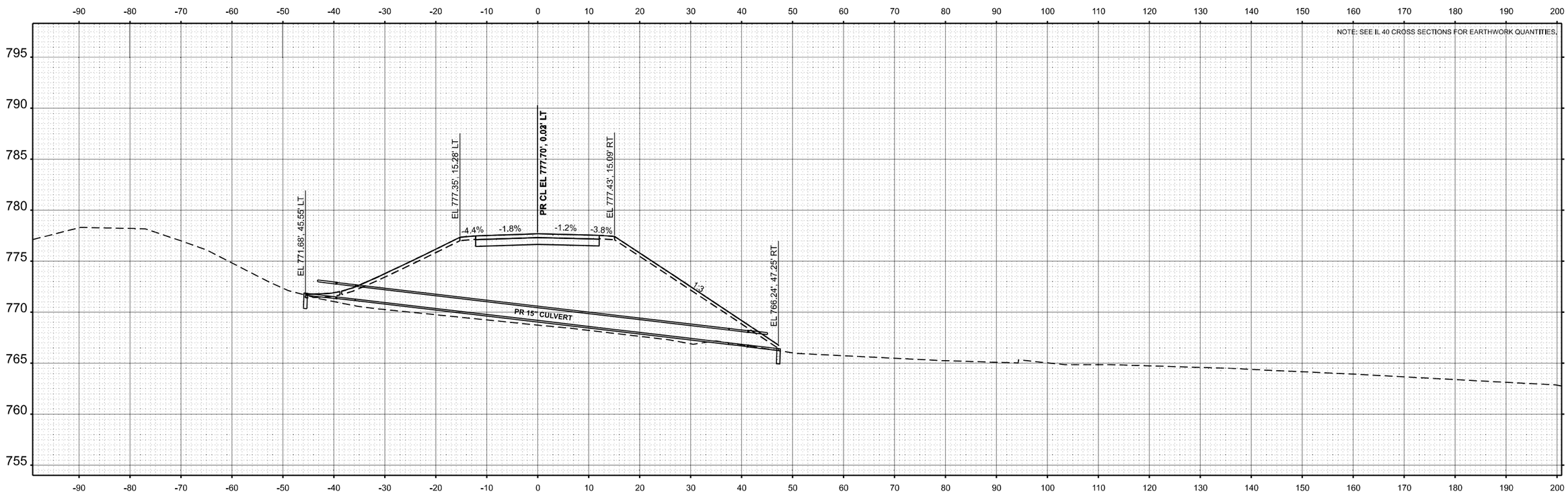

STA 10+49.53

MODEL: Bdr-XSec
FILE NAME: J:\22209.05\04_CADD\CADD_Drawings\D366M48-Borders.dgn

SINGH
SINGH + ASSOCIATES, INC.
CONSULTING ENGINEERS

USER NAME =	DESIGNED - LM	REVISED -	
	DRAWN - LM	REVISED -	
	CHECKED - JO	REVISED -	
PLOT DATE =	DATE - 01/06/2025	REVISED -	

STATE OF ILLINOIS
DEPARTMENT OF TRANSPORTATION

DRIVEWAY
CROSS SECTIONS

SCALE: 1"=10' | SHEET 19 OF 22 SHEETS | STA. 10+49.53 TO STA. 10+49.53

F.A.P RTE.	SECTION	COUNTY	TOTAL SHEETS	SHEET NO.
646	122V-BR1	BUREAU	69	63
		CONTRACT NO. 66M48		
		ILLINOIS	FED. AID PROJECT	

FINAL SURVEY		BY	DATE
NOTE BOOK NO.	SURVEYED		
	PLOTTED		
	TEMPLATE		
	AREAS		
	AREAS CHECKED		

ORIGINAL SURVEY		BY	DATE
NOTE BOOK NO.	SURVEYED		
	PLOTTED		
	TEMPLATE		
	AREAS		
	AREAS CHECKED		

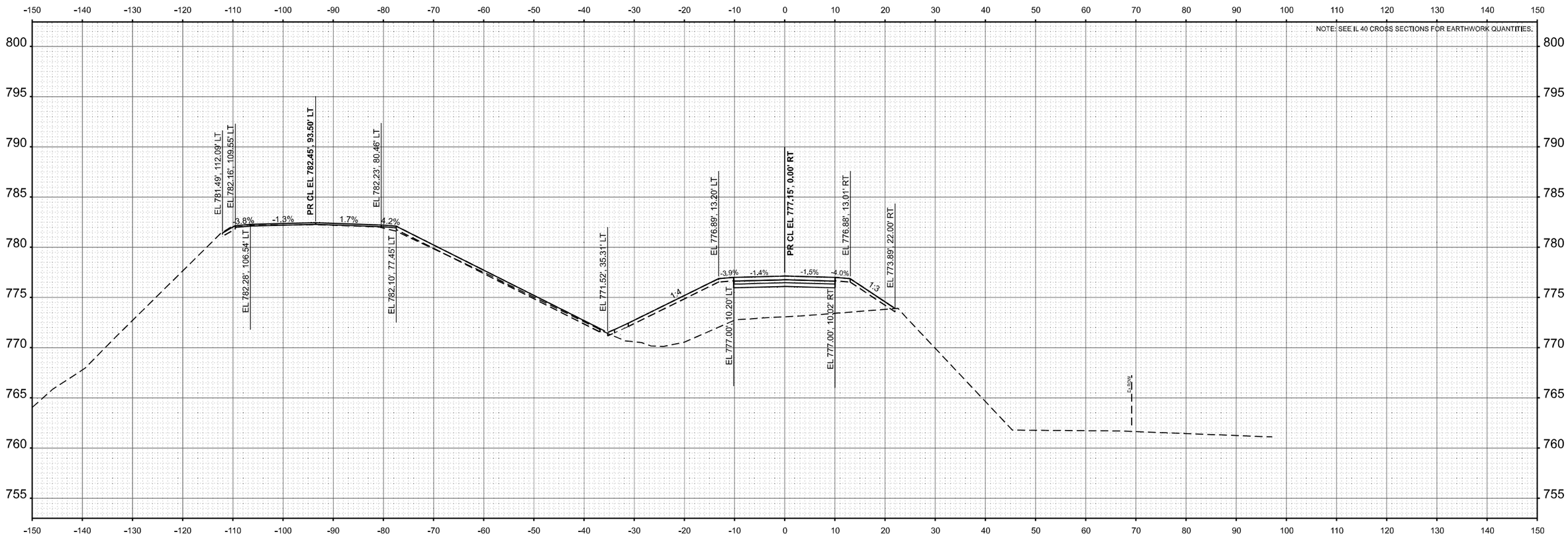

MODEL: Bdr-XSec
FILE NAME: J:\22209.05\04_CADD\CADD_Drawings\D366M48-Borders.dgn

SINGH
SINGH + ASSOCIATES, INC.
CONSULTING ENGINEERS

USER NAME =	DESIGNED - LM	REVISED -	
	DRAWN - LM	REVISED -	
	CHECKED - JO	REVISED -	
PLOT DATE =	DATE - 01/06/2025	REVISED -	

STATE OF ILLINOIS
DEPARTMENT OF TRANSPORTATION

DRIVEWAY
CROSS SECTIONS

SCALE: 1"=10' | SHEET 20 OF 22 SHEETS | STA. 11+00.00 TO STA. 11+00.00

F.A.P RTE.	SECTION	COUNTY	TOTAL SHEETS	SHEET NO.
646	122V-BR1	BUREAU	69	64
		CONTRACT NO. 66M48		
		ILLINOIS	FED. AID PROJECT	

FINAL SURVEY		BY	DATE
NOTE BOOK NO.	SURVEYED		
	PLOTTED		
	TEMPLATE		
	AREAS		
	AREAS CHECKED		

ORIGINAL SURVEY		BY	DATE
NOTE BOOK NO.	SURVEYED		
	PLOTTED		
	TEMPLATE		
	AREAS		
	AREAS CHECKED		

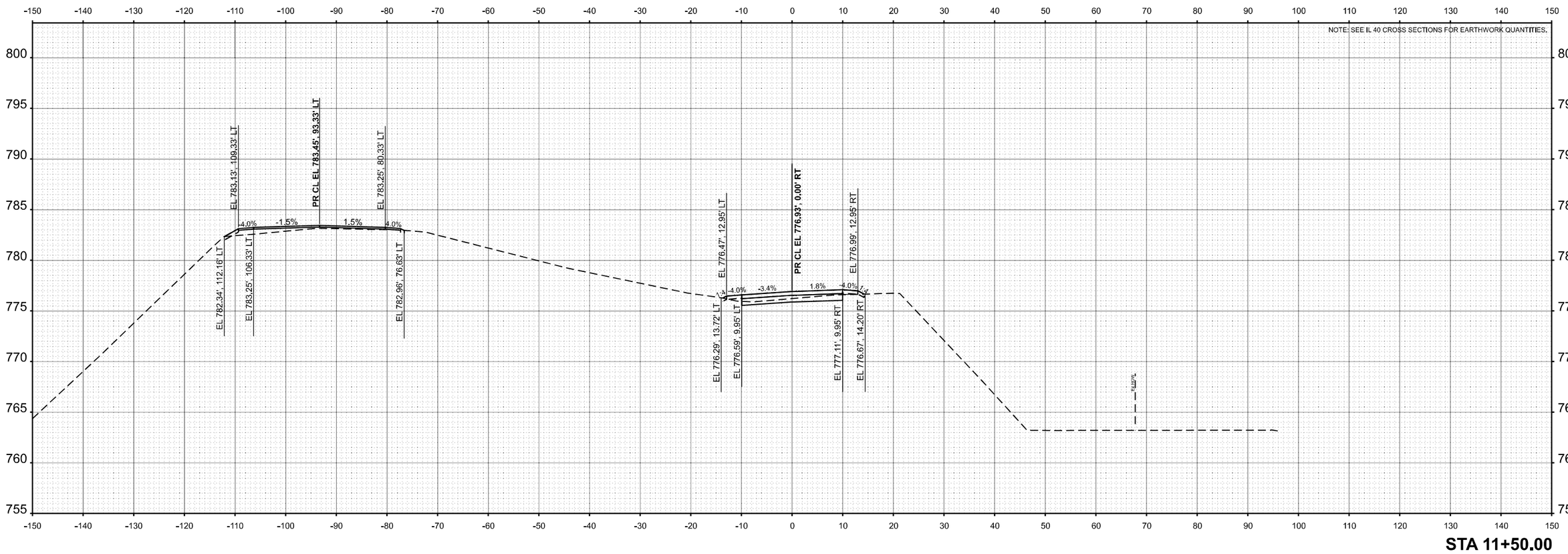

STA 11+50.00

MODEL: Bdt-XSec
FILE NAME: J:\22209.05\04_CADD\CADD_Drawings\D366M48-Borders.dgn

SINGH
SINGH + ASSOCIATES, INC.
CONSULTING ENGINEERS

USER NAME =	DESIGNED - LM	REVISED -	
	DRAWN - LM	REVISED -	
	CHECKED - JO	REVISED -	
PLOT DATE =	DATE - 01/06/2025	REVISED -	

STATE OF ILLINOIS
DEPARTMENT OF TRANSPORTATION

DRIVEWAY
CROSS SECTIONS

SCALE: 1"=10' | SHEET 21 OF 22 SHEETS | STA. 11+50.00 TO STA. 11+50.00

F.A.P RTE.	SECTION	COUNTY	TOTAL SHEETS	SHEET NO.
646	122V-BR1	BUREAU	69	65
		CONTRACT NO. 66M48		
		ILLINOIS	FED. AID PROJECT	

FINAL SURVEY		BY	DATE
NOTE BOOK NO.	SURVEYED		
	PLOTTED		
	TEMPLATE		
	AREAS		
	AREAS CHECKED		

ORIGINAL SURVEY		BY	DATE
NOTE BOOK NO.	SURVEYED		
	PLOTTED		
	TEMPLATE		
	AREAS		
	AREAS CHECKED		

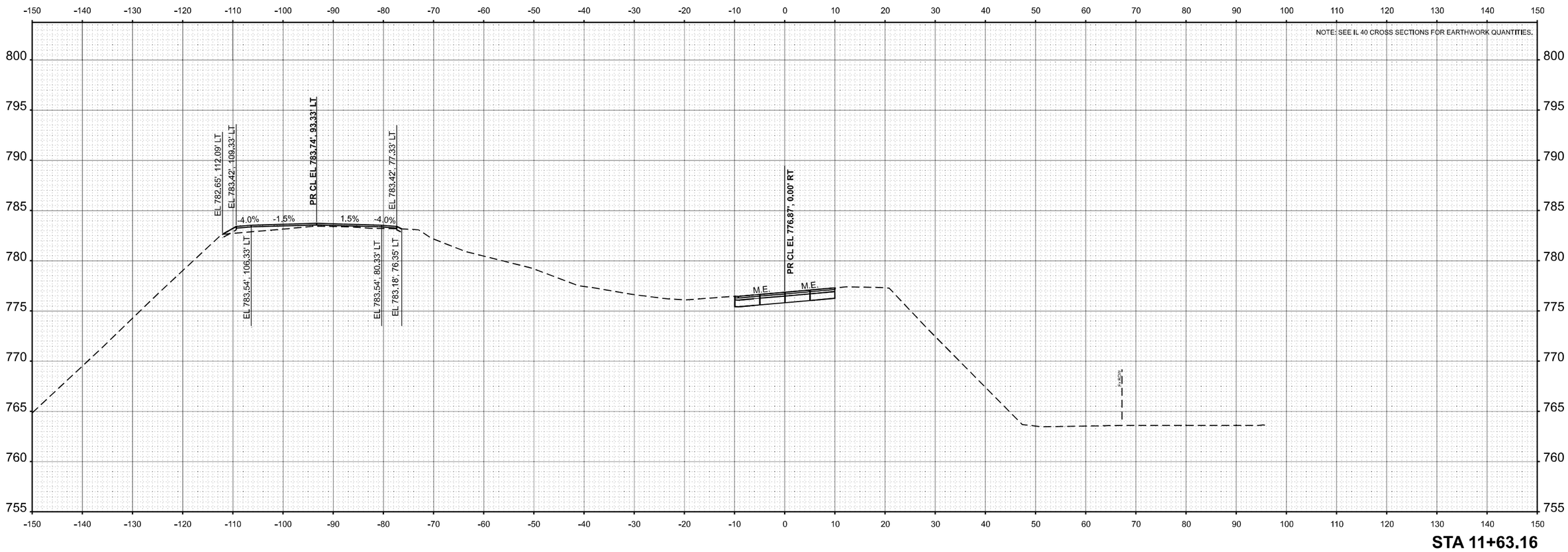

MODEL: Bdt-XSec
FILE NAME: J:\22209.05\04_CADD\CADD_Drawings\D366M48-Borders.dgn

SINGH
SINGH + ASSOCIATES, INC.
CONSULTING ENGINEERS

USER NAME =	DESIGNED - LM	REVISED -	
	DRAWN - LM	REVISED -	
	CHECKED - JO	REVISED -	
PLOT DATE =	DATE - 01/06/2025	REVISED -	

STATE OF ILLINOIS
DEPARTMENT OF TRANSPORTATION

DRIVEWAY
CROSS SECTIONS

SCALE: 1"=10' | SHEET 22 OF 22 SHEETS | STA. 11+63.16 TO STA. 11+63.16

F.A.P RTE.	SECTION	COUNTY	TOTAL SHEETS	SHEET NO.
646	122V-BR1	BUREAU	69	66
		CONTRACT NO. 66M48		
		ILLINOIS	FED. AID PROJECT	

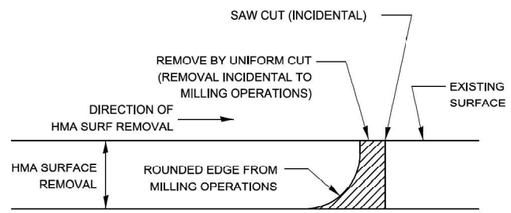

NOTE:

WHEN MILLING OPERATIONS PRODUCE A ROUNDED EDGE, THEN A SAW CUT SHALL BE USED TO MANUFACTURE A PERPENDICULAR EDGE AS SHOWN IN THE DETAIL. THE ENGINEER SHALL BE THE SOLE JUDGE CONCERNING THE USE OF THIS DETAIL

HMA BUTT JOINT SAW CUTS

406-8

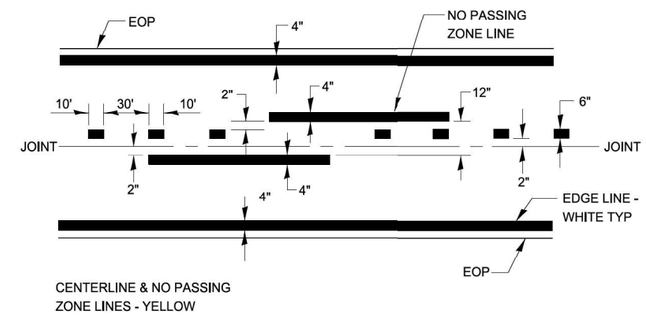

PAVEMENT MARKING

780-8

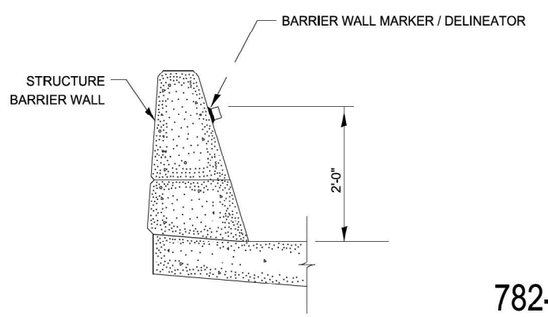

782-4

BARRIER WALL MARKER

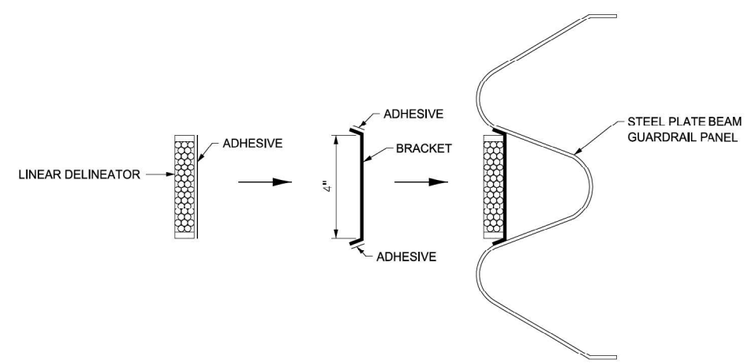

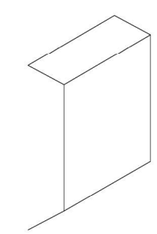

4" BRACKET

LINEAR DELINEATOR APPLICATION TO STANDARD GALVANIZED GUARDRAIL

LINEATOR DELINEATOR SHALL BE APLLIED ACCORDING TO THE MANUFACTURER'S RECOMMENDATIONS

782-5

MODEL: Bdr-Plan
FILE NAME: J:\22209.05\04_CADD\CADD_Drawings\D366M48-Borders.dgn

SINGH
SINGH + ASSOCIATES, INC.
CONSULTING ENGINEERS

USER NAME =	DESIGNED - LM	REVISED -	
	DRAWN - LM	REVISED -	
	CHECKED - JO	REVISED -	
PLOT DATE =	DATE - 01/06/2025	REVISED -	

STATE OF ILLINOIS
DEPARTMENT OF TRANSPORTATION

DISTRICT 3 STANDARD DETAILS

SCALE: 1"=50' | SHEET OF SHEETS | STA. TO STA.

F.A.P RTE.	SECTION	COUNTY	TOTAL SHEETS	SHEET NO.
646	122V-BR1	BUREAU	69	67
		CONTRACT NO. 66M48		
	ILLINOIS	FED. AID PROJECT		

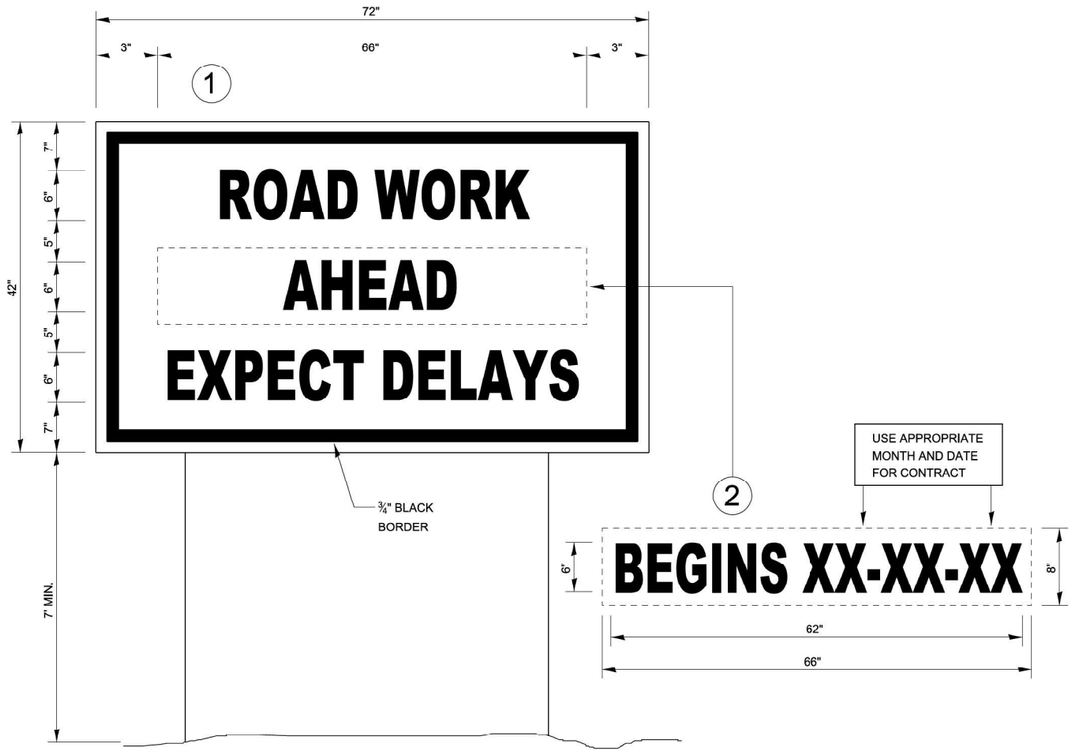

TEMPORARY INFORMATION SIGNING

NOTES:

1. USE 6" D BLACK LETTERING ON FLUORESCENT ORANGE BACKGROUND.
2. ERECT SIGNS AT LOCATIONS IN ADVANCE OF THE "ROAD CONSTRUCTION AHEAD" SIGNS AS DIRECTED BY THE ENGINEER.
3. ERECT SIGN①WITH INSTALLED PANEL②A MINIMUM OF ONE WEEK PRIOR TO THE START OF THE LANE CLOSURE.
4. REMOVE PANEL②ON THAT DATE.
5. SEE SPECIAL PROVISION "TEMPORARY INFORMATION SIGNING" FOR ADDITIONAL INFORMATION.
6. WILL BE PAID FOR PER SQ FT AS "TEMPORARY INFORMATION SIGNING". EACH SIGN = 21 SQ FT AND THE DATE PANEL②WILL NOT BE MEASURED SEPARATELY FOR PAYMENT.

720-8

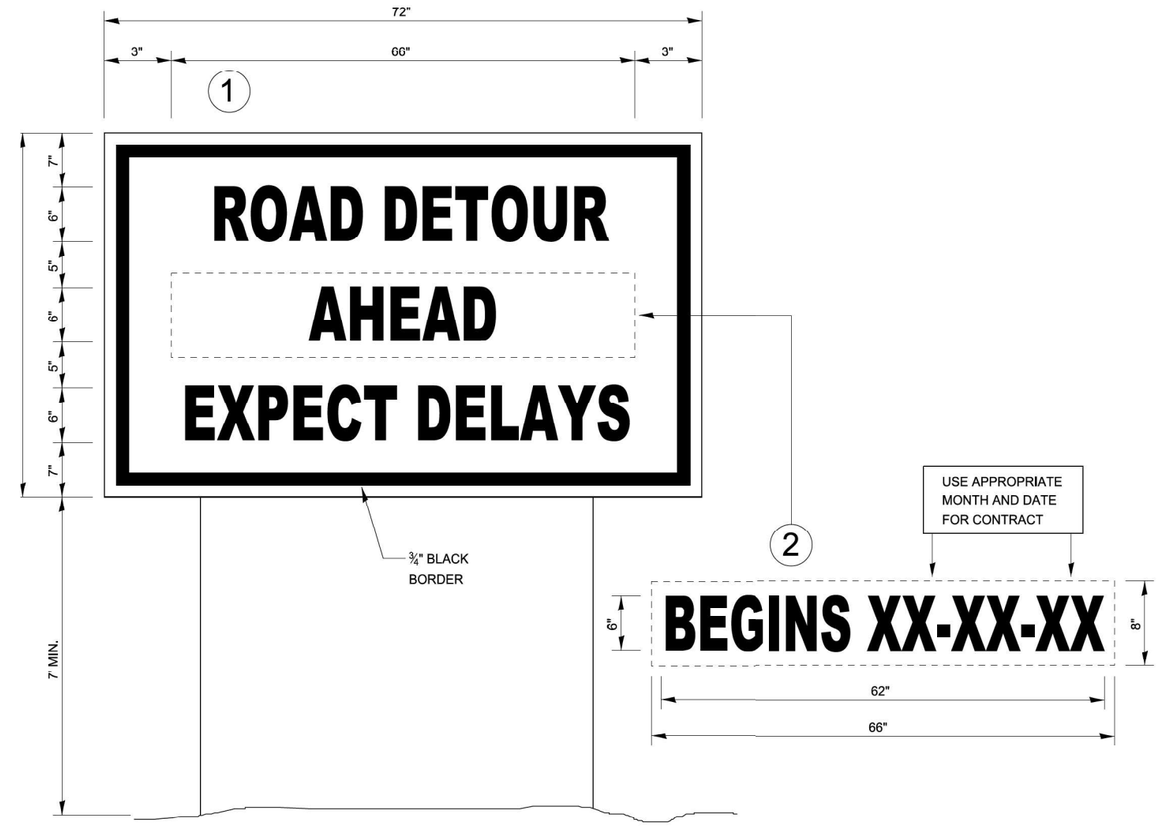

TEMPORARY INFORMATION SIGNING

NOTES:

1. USE 6" D BLACK LETTERING ON FLUORESCENT ORANGE BACKGROUND.
2. ERECT SIGNS AT LOCATIONS IN ADVANCE OF THE "ROAD CONSTRUCTION AHEAD" SIGNS AS DIRECTED BY THE ENGINEER.
3. ERECT SIGN①WITH INSTALLED PANEL②A MINIMUM OF ONE WEEK PRIOR TO THE START OF THE DETOUR.
4. REMOVE PANEL②ON THAT DATE.
5. SEE SPECIAL PROVISION "TEMPORARY INFORMATION SIGNING" FOR ADDITIONAL INFORMATION.
6. WILL BE PAID FOR PER SQ FT AS "TEMPORARY INFORMATION SIGNING". EACH SIGN = 21 SQ FT AND THE DATE PANEL②WILL NOT BE MEASURED SEPARATELY FOR PAYMENT.

720-9

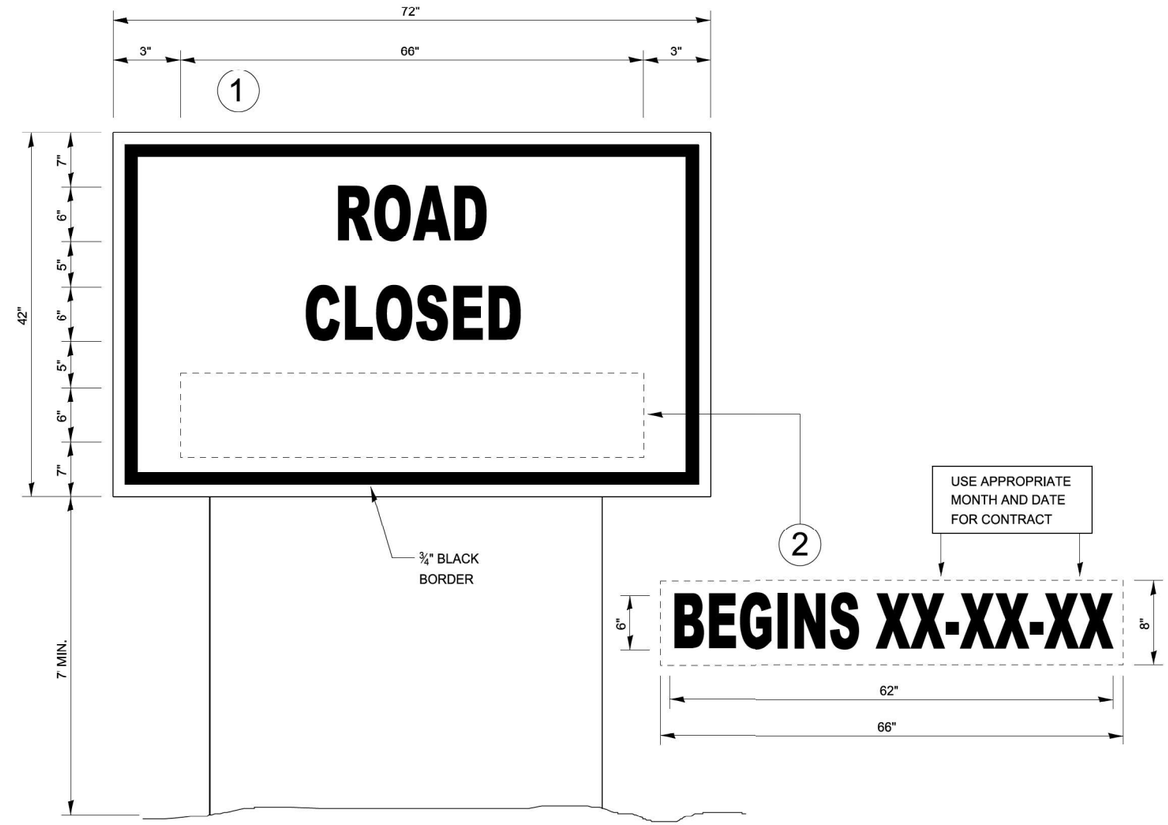

TEMPORARY INFORMATION SIGNING

NOTES:

1. USE 6" D BLACK LETTERING ON FLUORESCENT ORANGE BACKGROUND.
2. ERECT SIGNS AT LOCATIONS IN ADVANCE OF THE "ROAD CONSTRUCTION AHEAD" SIGNS AS DIRECTED BY THE ENGINEER.
3. ERECT SIGN①WITH INSTALLED PANEL②A MINIMUM OF ONE WEEK PRIOR TO THE START OF THE ROAD CLOSURE.
4. REMOVE PANEL②ON THAT DATE.
5. SEE SPECIAL PROVISION "TEMPORARY INFORMATION SIGNING" FOR ADDITIONAL INFORMATION.
6. WILL BE PAID FOR PER SQ FT AS "TEMPORARY INFORMATION SIGNING". EACH SIGN = 21 SQ FT AND THE DATE PANEL②WILL NOT BE MEASURED SEPARATELY FOR PAYMENT.

720-10

MODEL: Bdr-Plan
FILE NAME: J:\22209.05\04_CADD\CADD_Drawings\D366M48-Borders.dgn

SINGH
SINGH + ASSOCIATES, INC.
CONSULTING ENGINEERS

USER NAME =	DESIGNED - LM	REVISED -	
	DRAWN - LM	REVISED -	
	CHECKED - JO	REVISED -	
PLOT DATE =	DATE - 01/06/2025	REVISED -	

STATE OF ILLINOIS
DEPARTMENT OF TRANSPORTATION

DISTRICT 3 STANDARD DETAILS

SCALE: 1"=50' | SHEET OF SHEETS | STA. TO STA.

F.A.P RTE.	SECTION	COUNTY	TOTAL SHEETS	SHEET NO.
646	122V-BR1	BUREAU	69	69
		CONTRACT NO. 66M48		
	ILLINOIS	FED. AID PROJECT		