| EXISTING SIGNS AND REMOVALS/RELOCATIONS | | | | | | | | | | |
|---|---|---|---|---|---|---|---|---|---|---|
| | | | | | | 72400100 | 72400200 | 72400500 | 72400600 | |
| EXISTING SIGN NUMBER | PANEL DESCRIPTION | SIGN SUPPORT | STATION | OFFSET | ACTION | REMOVE SIGN PANEL ASSEMBLY - TYPE A | REMOVE SIGN PANEL ASSEMBLY - TYPE B | RELOCATE SIGN PANEL ASSEMBLY - TYPE A | RELOCATE SIGN PANEL ASSEMBLY - TYPE B | RELOCATE SIGN PANEL BY OTHERS |
| NORTH AURORA ROAD (STA 98+00 TO 108+00) | | | | | | (EACH) | (EACH) | (EACH) | (EACH) | (EACH) |
| E1-1 | DO NOT DRIVE ON SHOULDER | SQUARE TUBE | 98+20.85 | 32.29' RT | SIGN PANEL ASSEMBLY TO BE REMOVED | 1 | | | | |
| E1-2a<br>E1-2b<br>E1-2c | CITY OF AURORA<br>PURPLE HEART<br>POPULATION | DUAL SQUARE TUBE | 100+13.29 | 51.58' LT | SIGN PANEL ASSEMBLY TO BE RELOCATED | | | | 1 | |
| E1-3 | V20 UTILITY | PLASTIC TUBE | 101+03.67 | 31.39' RT | SIGN ON PLASTIC TUBE TO BE RELOCATED BY OTHERS | | | | | 1 |
| E1-4 | NO TRESPASSING | U-CHANNEL | 101+37.71 | 64.42' LT | SIGN PANEL ASSEMBLY TO BE RELOCATED BY OTHERS | | | | | 1 |
| E1-5a<br>E1-5b | SPEED LIMIT 40<br>DIVIDED HIGHWAY | U-CHANNEL | 102+17.65 | 31.22' LT | SIGN PANEL ASSEBLY TO BE REMOVED | | 1 | | | |
| E1-6 | DO NOT DRIVE ON SHOULDER | SQUARE TUBE | 103+18.56 | 32.15' RT | SIGN PANEL ASSEMBLY TO BE REMOVED | 1 | | | | |
| E1-7 | TRUCKS | MOUNTED ON POWER POLE | 103+94.00 | 32.12' RT | SIGN PANEL TO BE RELOCATED | 1 | | | | |
| E1-8a<br>E1-8b | SPEED LIMIT 40<br>NO PARKING ANY TIME | SQUARE TUBE | 105+10.29 | 23.41' RT | SIGN PANEL ASSEBLY TO BE REMOVED | 1 | | | | |
| E1-9 | STORE SIGN | U-CHANNEL | 105+41.02 | 60.13' LT | SIGN PANEL ASSEMBLY TO BE RELOCATED BY OTHERS | | | | | 1 |
| E1-18 | DO NOT DRIVE ON SHOULDER | SQUARE TUBE | 105+54.49 | 23.33' RT | SIGN PANEL ASSEMBLY TO BE REMOVED | 1 | | | | |
| E1-10 | NAPERVILLE TOWNSHIP ROAD DISTRICT | TWO WOODEN POSTS | 106+08.26 | 40.50' RT | SIGN PANEL ASSEMBLY TO BE RELOCATED BY OTHERS | | | | | 1 |
| E1-11a<br>E1-11b<br>E1-11c | NO PARKING<br>STOP SIGN<br>SECURITY WARNING | MOUNTED ON FENCE | 106+22.33 | 66.87' RT | SIGN PANEL TO BE RELOCATED BY OTHERS | | | | | 1 |
| E1-12 | GASLINE WARNING | U-CHANNEL | 106+88.67 | 24.35' LT | SIGN PANEL ASSEMBLY TO BE RELOCATED BY OTHERS | | | | | 1 |
| E1-13 | GASLINE WARNING | U-CHANNEL | 106+90.02 | 30.47' RT | SIGN PANEL ASSEMBLY TO BE RELOCATED BY OTHERS | | | | | 1 |
| E1-14 | AX 37 UTILITY | STEEL TUBE | 106+99.05 | 30.56' LT | SIGN ON STEEL TUBE TO BE RELOCATED BY OTHERS | | | | | 1 |
| E1-15 | 407 UTILITY | PLASTIC TUBE | 107+63.45 | 33.52' LT | SIGN ON PLASTIC TUBE TO BE RELOCATED BY OTHERS | | | | | 1 |
| E1-16 | UTILITY | SQUARE TUBE | 107+78.49 | 29.96' RT | SIGN ON SQUARE TUBE TO BE RELOCATED BY OTHERS | | | | | 1 |
| E1-17a<br>E1-17b | SIGNAL AHEAD<br>FRONTENAC ROAD | SQUARE TUBE | 107+91.01 | 32.81' RT | SIGN PANEL ASSEMBLY TO BE REMOVED | | 1 | | | |
| NORTH AURORA ROAD (STA 108+00 TO 117+85) | | | | | | | | | | |
| E2-1 | RAILROAD CLEARANCE | MOUNTED ON BRIDGE | 109+57.32 | 0.00 | SIGN PANEL TO BE RELOCATED BY OTHERS | | | | | 1 |
| E2-2 | RAILROAD CLEARANCE | MOUNTED ON BRIDGE | 109+87.17 | 0.00 | SIGN PANEL TO BE RELOCATED BY OTHERS | | | | | 1 |
| E2-4 | TRUCKS | U-CHANNEL | 113+35.22 | 28.91' LT | SIGN PANEL ASSEMBLY TO BE RELOCATED | 1 | | | | |
| E2-6 | STRAIGHT LANE AHEAD, LEFT TURN | U-CHANNEL | 114+06.94 | 27.73' RT | SIGN PANEL ASSEMBLY TO BE REMOVED | 1 | | | | |
| E2-7 | DO NOT ENTER | U-CHANNEL | 114+90.17 | 31.03' RT | SIGN PANEL ASSEMBLY TO BE REMOVED | 1 | | | | |
| E2-8a<br>E2-8b | STOP SIGN<br>RIGHT TURN ONLY | SQUARE TUBE | 115+23. | 51.02' RT | SIGN PANEL ASSEBLY TO BE REMOVED | | 1 | | | |
| E2-9 | DO NOT ENTER | U-CHANNEL | 115+55.07 | 31.44' RT | SIGN PANEL ASSEMBLY TO BE REMOVED | 1 | | | | |
| E2-10a<br>E2-10b<br>E2-10c | PARKING PROHIBITED<br>WEIGHT RESTRICTION<br>CITY OF NAPERVILLE | SQUARE TUBE | 115+57.06 | 32.35' RT | SIGN PANEL ASSEMBLY TO BE RELOCATED | | | | 1 | |
| E2-11 | SPEED LIMIT 40 | U-CHANNEL | 115+72.91 | 29.65' LT | SIGN PANEL ASSEMBLY TO BE REMOVED | 1 | | | | |
| E2-12 | STATE CHAMPS | SQUARE TUBE | 116+47.29 | 31.04' LT | SIGN PANEL ASSEMBLY TO BE RELOCATED | | | 1 | | |
| E2-13 | RIGHT TURN ONLY | 2 U-CHANNEL | 119+49.43 | 38.25' LT | SIGN PANEL ASSEMBLY TO BE REMOVED | 1 | | | | |
| NORTH AURORA ROAD (STA 121+00 TO 128+00) | | | | | | | | | | |
| E3-1 | RIGHT LANE MUST TURN RIGHT | U-CHANNEL | 121+55.24 | 34.49' LT | SIGN PANEL ASSEMBLY TO BE REMOVED | 1 | | | | |
| | | | | | TOTAL: | 12 | 3 | 1 | 2 | 12 |

PAVEMENT MARKING LEGEND

1. THERMOPLASTIC PAVEMENT MARKING LINE 4" (WHITE LINES - 10' LINE 30' SPACE)
2. THERMOPLASTIC PAVEMENT MARKING LINE 4" (2 YELLOW LINES AT 11" C-C)
3. THERMOPLASTIC PAVEMENT MARKING LINE 24" (WHITE)
4. THERMOPLASTIC PAVEMENT MARKING LINE 6" (WHITE)
5. THERMOPLASTIC PAVEMENT MARKING LINE 12" (YELLOW DIAGONALS AT 50' SPACING)
6. THERMOPLASTIC PAVEMENT MARKING LINE 6" (WHITE LINES - 2' LINE 6' SPACE)
7. THERMOPLASTIC PAVEMENT MARKING - LETTERS & SYMBOLS
8. RAISED REFLECTIVE PAVEMENT MARKER
9. THERMOPLASTIC PAVEMENT MARKING LINE 4" (YELLOW)

PAVEMENT MARKING NOTES:

1. ALL SIDEWALKS AND CURB RAMPS SHALL BE CONSTRUCTED AS SHOWN ON THE PLAN AND PROFILE SHEETS
2. ALL PAVEMENT MARKINGS SHALL BE IN CONFORMANCE WITH THE ILLINOIS MANUAL ON UNIFORM TRAFFIC CONTROL DEVICES FOR STREETS AND HIGHWAYS. THERMOPLASTIC PAVEMENT MARKINGS ON HMA PAVEMENT (NORTH AURORA ROAD).
3. DIMENSIONS TO PAVEMENT MARKINGS SHALL BE TO THE CENTER OF A SINGLE LINE OR THE CENTER OF THE GAP FOR DOUBLE LINES UNLESS OTHERWISE INDICATED.
4. TURN LANES MARKINGS (ARROW AND "ONLY") TO BE INSTALLED AS SHOWN ON DISTRICT ONE TYPICAL PAVEMENT MARKINGS DETAILS.
5. MEDIAN DIAGONAL LINE PAVEMENT MARKINGS TO BE INSTALLED AS SHOWN ON DISTRICT ONE TYPICAL PAVEMENT MARKING DETAILS.
6. RAISED REFLECTIVE PAVEMENT MARKERS TO BE INSTALLED AS SHOWN ON DISTRICT ONE TYPICAL APPLICATIONS OF RAISED REFLECTIVE PAVEMENT MARKERS DETAIL.

SIGNING NOTES:

1. ALL EXISTING PRIVATE SIGNS WITHIN THE STATE RIGHT OF WAY THAT INTERFERE WITH CONSTRUCTION OPERATIONS WILL BE REMOVED AND REPLACED BY OTHERS. THE CONTRACTOR SHALL NOTIFY THE OWNERS PRIOR TO START OF CONSTRUCTION.

PAVEMENT MARKING SYMBOL LEGEND

TURN ARROW (LEFT OR RIGHT ARROW)
15.6 SQ. FT.

ONLY — ONLY LETTERS
20.8 SQ. FT.

SIGN LEGEND

PROPOSED SIGN SUPPORT

EXISTING SIGN SUPPORT

R3-8 P1-1 — NEW SIGN PANEL (TYPE 1 OR 2)
W/ MUTCD SIGN CODE & SIGN NUMBER
SEE SIGN SCHEDULE ON SHEET NO. 102
(ALL SIGNS SHALL USE TYPE ZZ SHEETING)

E1-1 — EXISTING SIGN TO REMAIN IN PLACE SEE SIGN SCHEDULE ON THIS SHEET

E1-1 — EXISTING SIGN TO BE REMOVED
NEW SIGN PANEL MATCHING EXISTING
SIGN TO BE INSTALLED AT LOCATION
SHOWN ON SIGN SCHEDULE ON SHEET NO. 102

EXISTING SIGN TO BE REMOVED SEE SIGN SCHEDULE ON THIS SHEET

PLAN — SURVEYED / PLOTTED / ALIGNMENT CHECKED / RT. OF WAY CHECKED / CADD FILE NAME / NOTE BOOK NO. / BY / DATE

PROFILE — SURVEYED / PLOTTED / GRADES CHECKED / BM. NOTED / STRUCTURE NOTAT'NS CHK'D / NOTE BOOK NO. / BY / DATE

FILE NAME = 0G0P32-PMK-00

TRANSYSTEMS

| | | | |
|---|---|---|---|
| USER NAME = brvanderwal | DESIGNED - MKW | REVISED - | |
| | DRAWN - BMS | REVISED - | |
| PLOT SCALE = 100.0000 ' / in. | CHECKED - BVW | REVISED - | |
| PLOT DATE = 1/25/2025 | DATE - 1/25/2025 | REVISED - | |

STATE OF ILLINOIS
DEPARTMENT OF TRANSPORTATION

NORTH AURORA ROAD
PENNSBURY LANE TO FRONTENAC ROAD
EXISTING SIGN AND REMOVAL/RELOCATION SCHEDULE

SCALE: NONE | SHEET 1 OF 4 SHEETS | STA. TO STA.

| F.A.U. RTE. | SECTION | COUNTY | TOTAL SHEETS | SHEET NO. |
|---|---|---|---|---|
| 1509 | 06-00133-00-BR | DuPAGE | 426 | 101 |

CONTRACT NO. 61G79

ILLINOIS FED. AID PROJECT

| PROPOSED SIGN NUMBER | SIGN DESIGNATION | PANEL DESCRIPTION | STATION | OFFSET | LT/RT | FACING TRAFFIC | COLOR | WIDTH | HEIGHT | 72000100 SIGN PANEL - TYPE 1 | NUMBER OF POSTS | 72800100 TELESCOPING STEEL SIGN SUPPORT | 72900100 METAL POST - TYPE A | 72900200 METAL POST - TYPE B |
|---|---|---|---|---|---|---|---|---|---|---|---|---|---|---|
| | | | | (FT) | | | | (IN) | (IN) | (SQ FT) | | (FT) | (FT) | (FT) |
| NORTH AURORA ROAD (STA 98+00 TO 108+00) | | | | | | | | | | | | | | |
| P1-1 | R4-7 | KEEP RIGHT | 95+21 | 9.1 | LT | EB | WHITE | 24 | 30 | 5 | 1.0 | | | 13.5 |
| P1-2 | R3-5L | LEFT TURN ONLY | 96+67 | 9.3 | LT | WB | WHITE | 30 | 36 | 7.5 | 2.0 | | 29.0 | |
| P1-3 | R3-5bP | LEFT LANE | | | | WB | WHITE | 30 | 12 | 2.5 | | | | |
| P1-5a | R2-1 | SPEED LIMIT 40 | 102+25 | 58.8 | LT | WB | WHITE | 30 | 36 | 7.5 | 1.0 | 15.0 | | |
| P1-4 | R3-5L | LEFT TURN ONLY | 103+30 | 27.5 | LT | EB | WHITE | 30 | 36 | 7.5 | 2.0 | | 29.0 | |
| P1-5 | R3-5bP | LEFT LANE | | | | EB | WHITE | 30 | 12 | 2.5 | | | | |
| E1-7 | W11-10 | TRUCKS | 104+05 | 36.3 | RT | EB | YELLOW | 36 | 36 | 9 | 2.0 | | 27.0 | |
| E1-8a | R2-1 | SPEED LIMIT 40 | 105+08 | 16.8 | RT | EB | WHITE | 30 | 36 | 7.5 | 1.0 | 17.0 | | |
| E1-8b | R7-1 | NO PARKING ANY TIME | | | | EB | WHITE | 12 | 18 | 1.5 | | | | |
| P1-6 | R4-7 | KEEP RIGHT | 105+47 | 27.5 | LT | WB | WHITE | 24 | 30 | 5 | 1.0 | | | 13.5 |
| P1-7 | R4-7 | KEEP RIGHT | 106+76 | 14.5 | LT | EB | WHITE | 24 | 30 | 5 | 1.0 | | | 13.5 |
| P1-8 | R6-2R | ONE WAY RIGHT | 107+40 | 14.5 | LT | NB | WHITE | 24 | 30 | 5 | 1.0 | | | 13.5 |
| E1-17a | W3-3 | SIGNAL AHEAD | 107+90 | 16.8 | RT | EB | YELLOW | 36 | 36 | 9 | 1.0 | 16.0 | | |
| E1-17b | W16-8 | FRONTENAC ROAD | | | | EB | YELLOW | 36 | 9 | 2.25 | | | | |
| NORTH AURORA ROAD (STA 108+00 TO 117+85) | | | | | | | | | | | | | | |
| P2-1 | R3-5L | LEFT TURN ONLY | 108+84 | 14.5 | LT | WB | WHITE | 30 | 36 | 7.5 | 2.0 | | 29.0 | |
| P2-2 | R3-5bP | LEFT LANE | | | | WB | WHITE | 30 | 12 | 2.5 | | | | |
| E2-4 | W11-10 | TRUCKS | 113+35 | 51.4 | LT | WB | YELLOW | 36 | 36 | 9 | 2.0 | | 27.0 | |
| E2-7 | R5-1 | DO NOT ENTER | 114+90 | 31.6 | RT | EB | WHITE | 36 | 36 | 9 | 2.0 | | 27.0 | |
| E2-8a | R1-1 | STOP SIGN | 115+23 | 51.0 | RT | NB | RED | 30 | 30 | 6.25 | 1.0 | 18.0 | | |
| E2-8b | R3-5R | RIGHT TURN ONLY | | | | NB | WHITE | 30 | 36 | 7.5 | | | | |
| P2-3 | R6-2R | ONE WAY RIGHT | 115+21 | 9.3 | LT | NB | WHITE | 24 | 30 | 5 | 1.0 | | | 13.5 |
| E2-9 | R5-1 | DO NOT ENTER | 115+55 | 34.0 | RT | SB | WHITE | 36 | 36 | 9 | 2.0 | | 27.0 | |
| E2-11 | R2-1 | SPEED LIMIT 40 | 115+56 | 41.7 | LT | WB | WHITE | 30 | 36 | 7.5 | 2.0 | | 27.0 | |
| P2-4 | R3-5L | LEFT TURN ONLY | 115+74 | 9.3 | LT | EB | WHITE | 30 | 36 | 7.5 | 2.0 | | 29.0 | |
| P2-5 | R3-5bP | LEFT LANE | | | | EB | WHITE | 30 | 12 | 2.5 | | | | |
| P2-6 | R4-7 | KEEP RIGHT | 117+80 | 6.0 | LT | WB | WHITE | 24 | 30 | 5 | 1.0 | | | 13.5 |
| | | | TOTAL: | | | | | | | 155.0 | 28 | 66.0 | 251.0 | 81.0 |

PLAN
NOTE BOOK NO. ____
SURVEYED ____
PLOTTED ____
ALIGNMENT CHECKED ____
RT. OF WAY CHECKED ____
CADD FILE NAME ____
BY
DATE

PROFILE
NOTE BOOK NO. ____
SURVEYED ____
PLOTTED ____
GRADES CHECKED ____
B.M. NOTED ____
STRUCTURE NOTAT'NS CHK'D
BY
DATE

FILE NAME = 0600P32-PMK-00

TRANSYSTEMS

| | | | |
|---|---|---|---|
| USER NAME = brvanderwal | DESIGNED - MKW | REVISED - | |
| | DRAWN - BMS | REVISED - | |
| PLOT SCALE = 100.0000 ' / in. | CHECKED - BVW | REVISED - | |
| PLOT DATE = 1/25/2025 | DATE - 1/25/2025 | REVISED - | |

**STATE OF ILLINOIS**
**DEPARTMENT OF TRANSPORTATION**

**NORTH AURORA ROAD**
**PENNSBURY LANE TO FRONTENAC ROAD**
**PROPOSED SIGN SCHEDULE**

SCALE: NONE | SHEET 2 OF 4 SHEETS | STA. TO STA.

| F.A.U. RTE. | SECTION | COUNTY | TOTAL SHEETS | SHEET NO. |
|---|---|---|---|---|
| 1509 | 06-00133-00-BR | DuPAGE | 426 | 102 |

CONTRACT NO. 61G79

ILLINOIS FED. AID PROJECT

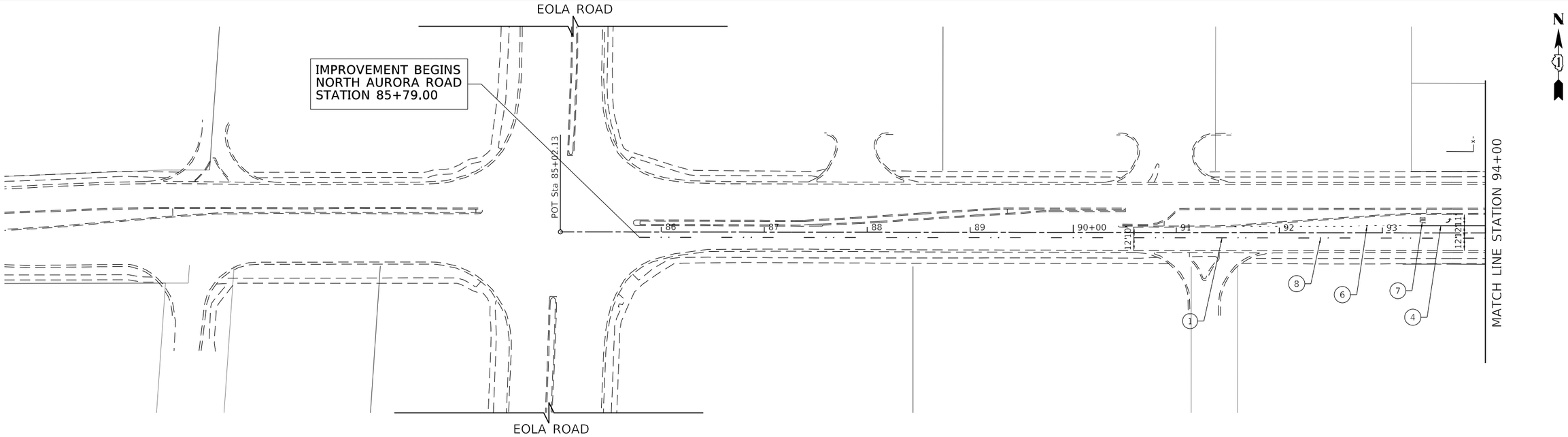


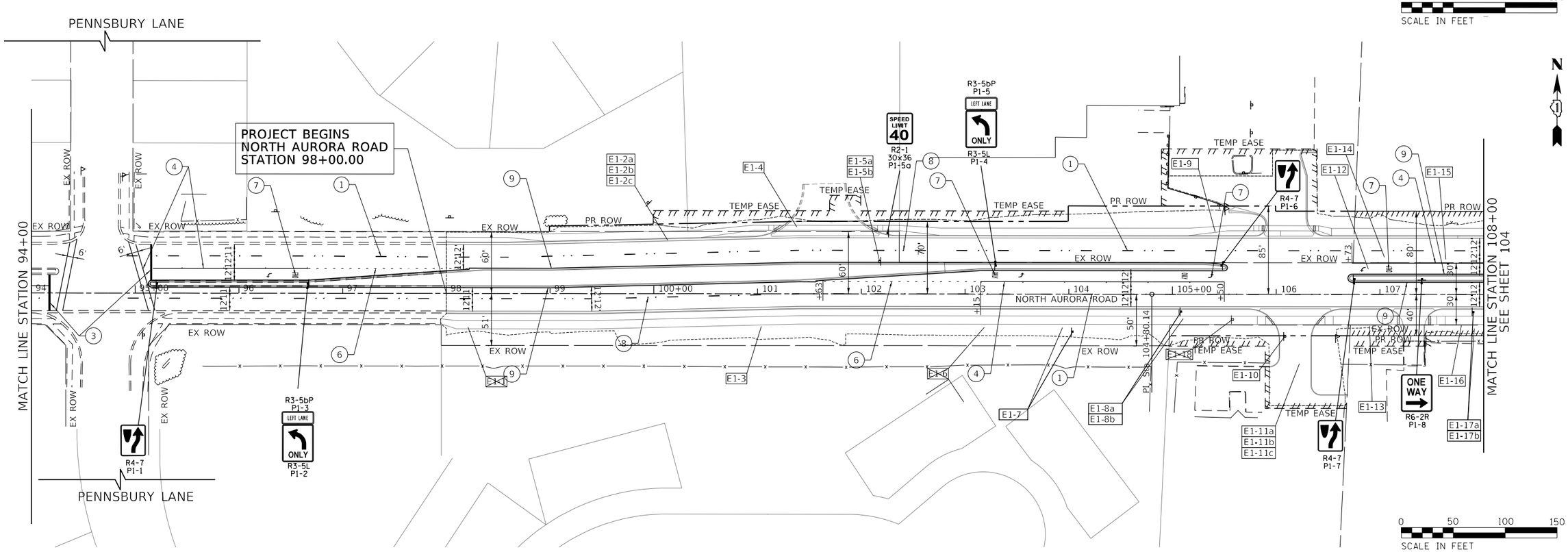


| PLAN | | BY | DATE |
|---|---|---|---|
| SURVEYED | | | |
| PLOTTED | | | |
| ALIGNMENT CHECKED | | | |
| RT. OF WAY CHECKED | | | |
| CADD FILE NAME | | | |
| NOTE BOOK NO. | | | |

| PROFILE | | BY | DATE |
|---|---|---|---|
| SURVEYED | | | |
| PLOTTED | | | |
| GRADES CHECKED | | | |
| BM. NOTED | | | |
| STRUCTURE NOTATNS CHKD | | | |
| NOTE BOOK NO. | | | |

FILE NAME = 060892-PMK-01

TRANSYSTEMS

| | | | |
|---|---|---|---|
| USER NAME = brvanderwal | DESIGNED - MKW | REVISED - | |
| | DRAWN - BMS | REVISED - | |
| PLOT SCALE = 100.0001 ' / in. | CHECKED - BVW | REVISED - | |
| PLOT DATE = 1/25/2025 | DATE - 1/25/2025 | REVISED - | |

**STATE OF ILLINOIS**
**DEPARTMENT OF TRANSPORTATION**

**NORTH AURORA ROAD**
**PENNSBURY LANE TO FRONTENAC ROAD**
**PAVEMENT MARKING AND SIGNING**

SCALE: 1"=50' | SHEET 3 OF 4 SHEETS | STA. 85+02.13 TO STA. 108+00.00

| F.A.U. RTE. | SECTION | COUNTY | TOTAL SHEETS | SHEET NO. |
|---|---|---|---|---|
| 1509 | 06-00133-00-BR | DuPAGE | 426 | 103 |
| | | CONTRACT NO. 61G79 | | |
| | | ILLINOIS FED. AID PROJECT | | |

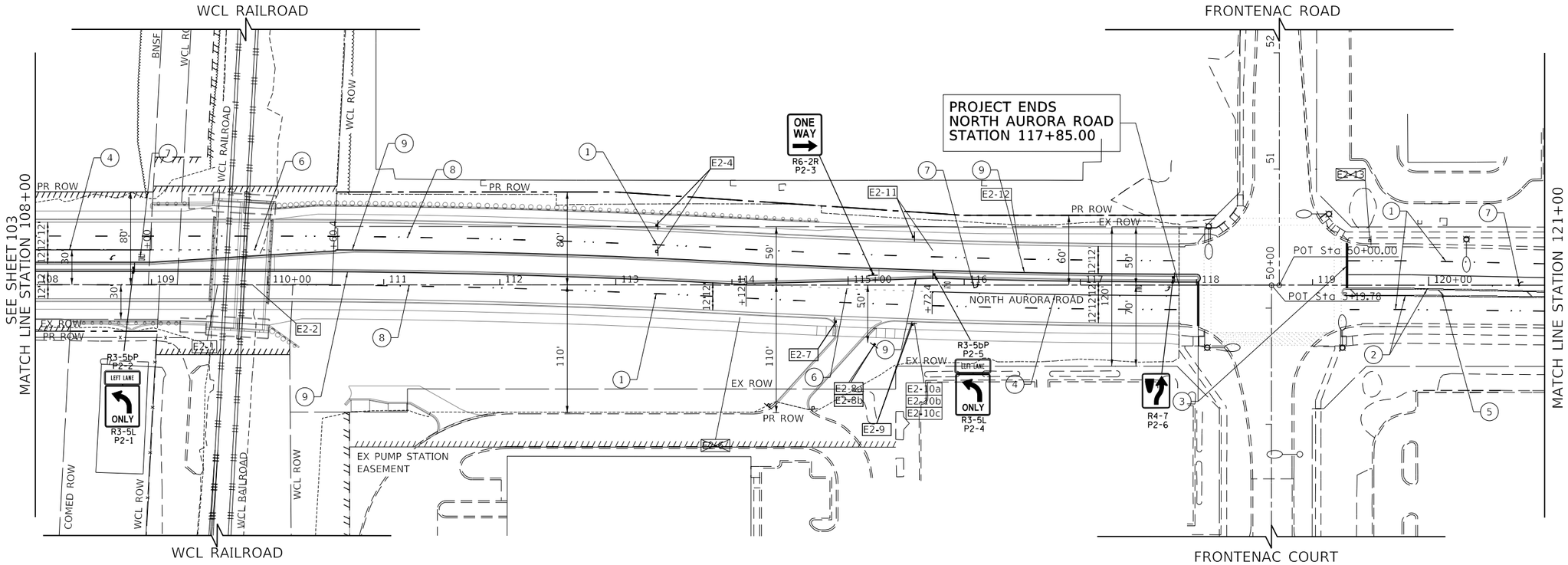


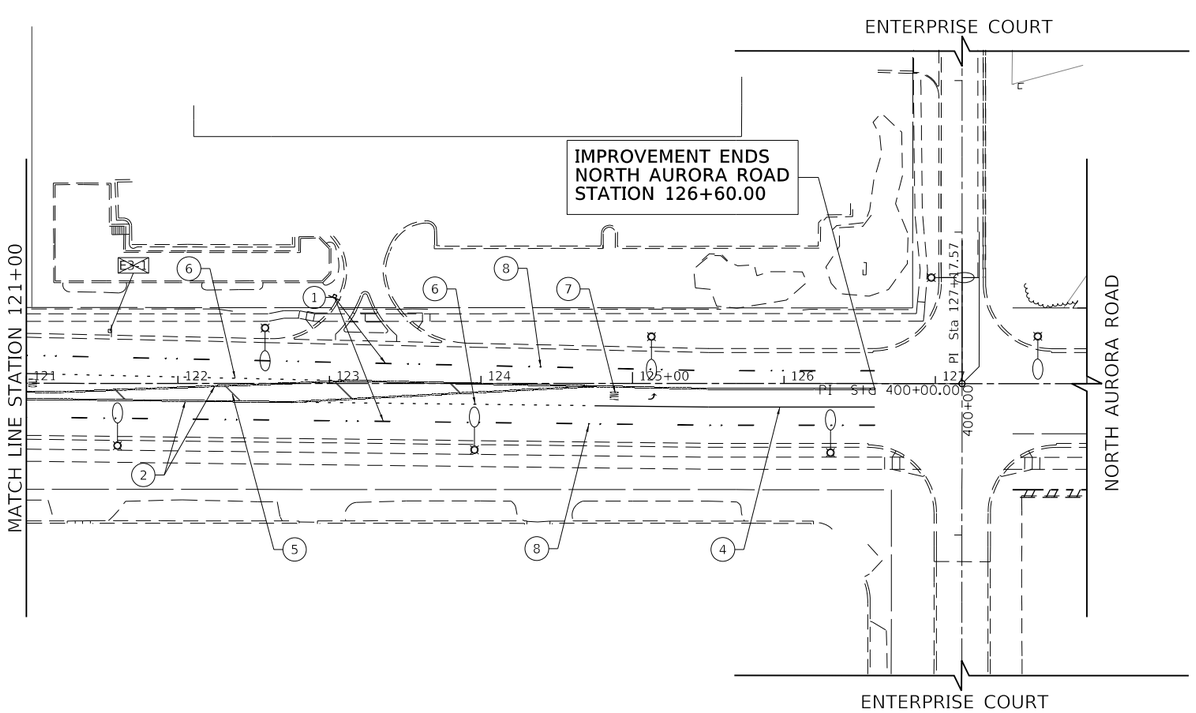


| PLAN | | | |
|---|---|---|---|
| NOTE BOOK NO. ____ | SURVEYED | | DATE |
| | PLOTTED | | |
| | ALIGNMENT CHECKED | | |
| | RT. OF WAY CHECKED | | |
| | CADD FILE NAME | | |

| PROFILE | | | |
|---|---|---|---|
| NOTE BOOK NO. ____ | SURVEYED | | DATE |
| | PLOTTED | | |
| | GRADES CHECKED | | |
| | BKM. NOTED | | |
| | STRUCTURE NOTATNS CHKD | | |

FILE NAME = 060092-PMK-02

TRANSYSTEMS

| | | | |
|---|---|---|---|
| USER NAME = brvanderwal | DESIGNED - MKW | REVISED - | |
| | DRAWN - BMS | REVISED - | |
| PLOT SCALE = 100.0000 ' / in. | CHECKED - BVW | REVISED - | |
| PLOT DATE = 1/25/2025 | DATE - 1/25/2025 | REVISED - | |

**STATE OF ILLINOIS**
**DEPARTMENT OF TRANSPORTATION**

**NORTH AURORA ROAD**
**PENNSBURY LANE TO FRONTENAC ROAD**
**PAVEMENT MARKING AND SIGNING**

SCALE: 1"=50' | SHEET 4 OF 4 SHEETS | STA. 108+00.00 TO STA. 128+00.00

| F.A.U. RTE. | SECTION | COUNTY | TOTAL SHEETS | SHEET NO. |
|---|---|---|---|---|
| 1509 | 06-00133-00-BR | DuPAGE | 426 | 104 |

CONTRACT NO. 61G79

ILLINOIS FED. AID PROJECT

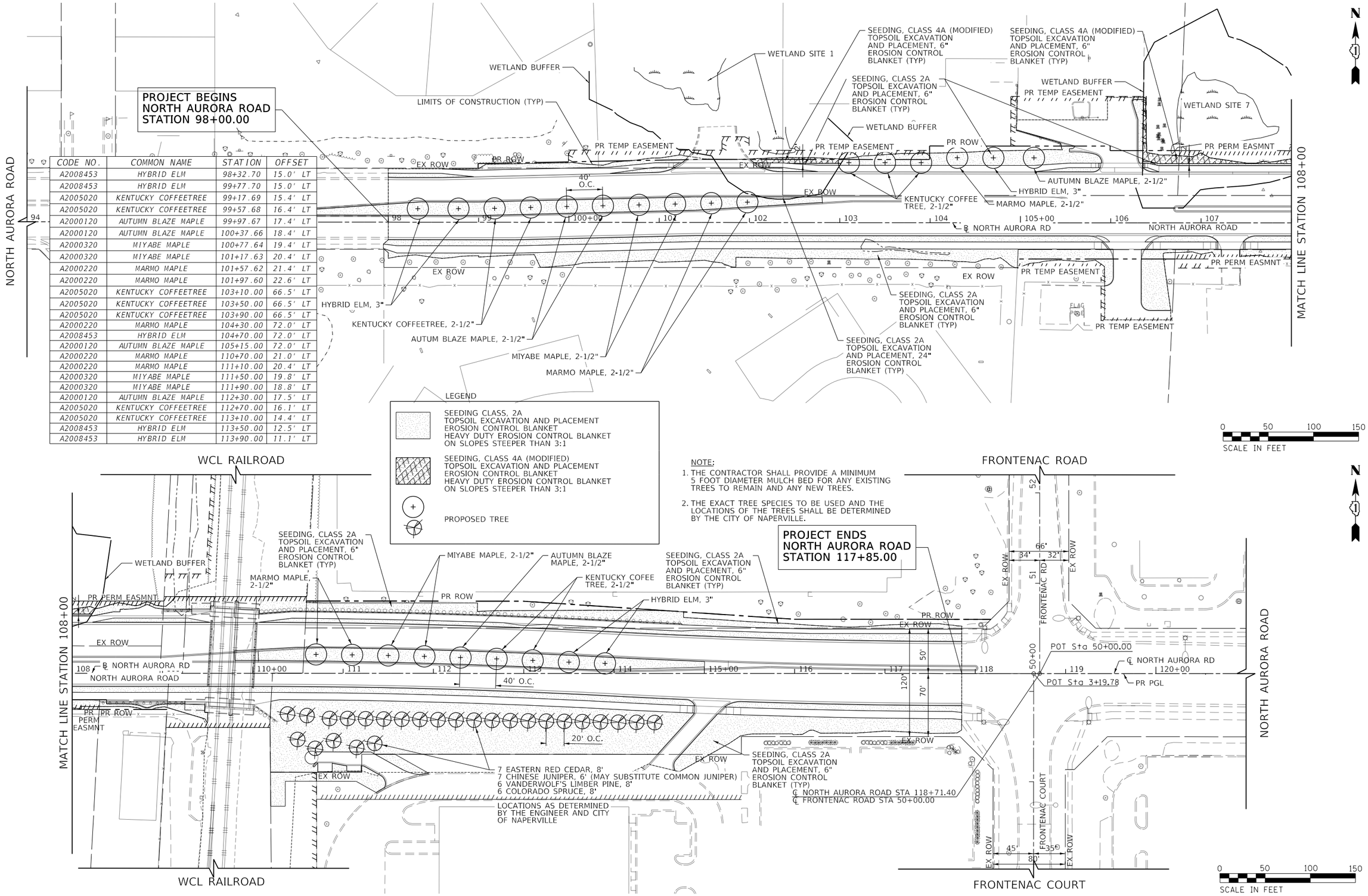


| CODE NO. | COMMON NAME | STATION | OFFSET |
|---|---|---|---|
| A2008453 | HYBRID ELM | 98+32.70 | 15.0' LT |
| A2008453 | HYBRID ELM | 99+77.70 | 15.0' LT |
| A2005020 | KENTUCKY COFFEETREE | 99+17.69 | 15.4' LT |
| A2005020 | KENTUCKY COFFEETREE | 99+57.68 | 16.4' LT |
| A2000120 | AUTUMN BLAZE MAPLE | 99+97.67 | 17.4' LT |
| A2000120 | AUTUMN BLAZE MAPLE | 100+37.66 | 18.4' LT |
| A2000320 | MIYABE MAPLE | 100+77.64 | 19.4' LT |
| A2000320 | MIYABE MAPLE | 101+17.63 | 20.4' LT |
| A2000220 | MARMO MAPLE | 101+57.62 | 21.4' LT |
| A2000220 | MARMO MAPLE | 101+97.60 | 22.6' LT |
| A2005020 | KENTUCKY COFFEETREE | 103+10.00 | 66.5' LT |
| A2005020 | KENTUCKY COFFEETREE | 103+50.00 | 66.5' LT |
| A2005020 | KENTUCKY COFFEETREE | 103+90.00 | 66.5' LT |
| A2000220 | MARMO MAPLE | 104+30.00 | 72.0' LT |
| A2008453 | HYBRID ELM | 104+70.00 | 72.0' LT |
| A2000120 | AUTUMN BLAZE MAPLE | 105+15.00 | 72.0' LT |
| A2000220 | MARMO MAPLE | 110+70.00 | 21.0' LT |
| A2000220 | MARMO MAPLE | 111+10.00 | 20.4' LT |
| A2000320 | MIYABE MAPLE | 111+50.00 | 19.8' LT |
| A2000320 | MIYABE MAPLE | 111+90.00 | 18.8' LT |
| A2000120 | AUTUMN BLAZE MAPLE | 112+30.00 | 17.5' LT |
| A2005020 | KENTUCKY COFFEETREE | 112+70.00 | 16.1' LT |
| A2005020 | KENTUCKY COFFEETREE | 113+10.00 | 14.4' LT |
| A2008453 | HYBRID ELM | 113+50.00 | 12.5' LT |
| A2008453 | HYBRID ELM | 113+90.00 | 11.1' LT |

LEGEND

- SEEDING CLASS, 2A TOPSOIL EXCAVATION AND PLACEMENT EROSION CONTROL BLANKET HEAVY DUTY EROSION CONTROL BLANKET ON SLOPES STEEPER THAN 3:1
- SEEDING, CLASS 4A (MODIFIED) TOPSOIL EXCAVATION AND PLACEMENT EROSION CONTROL BLANKET HEAVY DUTY EROSION CONTROL BLANKET ON SLOPES STEEPER THAN 3:1
- PROPOSED TREE

NOTE:

1. THE CONTRACTOR SHALL PROVIDE A MINIMUM 5 FOOT DIAMETER MULCH BED FOR ANY EXISTING TREES TO REMAIN AND ANY NEW TREES.
2. THE EXACT TREE SPECIES TO BE USED AND THE LOCATIONS OF THE TREES SHALL BE DETERMINED BY THE CITY OF NAPERVILLE.

PLAN — SURVEYED / PLOTTED / ALIGNMENT CHECKED / RT. OF WAY CHECKED / CADD FILE NAME — NOTE BOOK NO. ____ — BY — DATE

PROFILE — SURVEYED / PLOTTED / GRADES CHECKED / BLM. NOTED / STRUCTURE NOTAT'NS CH'KD — NOTE BOOK NO. ____ — BY — DATE

FILE NAME = 0620092-LANDSCAPING-01

TRANSYSTEMS

| | | | |
|---|---|---|---|
| USER NAME = brvanderwal | DESIGNED - MKW | REVISED - | |
| | DRAWN - BMS | REVISED - | |
| PLOT SCALE = 100.0001 ' / in. | CHECKED - BVW | REVISED - | |
| PLOT DATE = 1/25/2025 | DATE - 1/25/2025 | REVISED - | |

**STATE OF ILLINOIS**
**DEPARTMENT OF TRANSPORTATION**

**NORTH AURORA ROAD**
**PENNSBURY LANE TO FRONTENAC ROAD**
**LANDSCAPING**

SCALE: 1"=50' | SHEET 1 OF 1 SHEETS | STA. 94+00.00 TO STA. 121+00.00

| F.A.U. RTE. | SECTION | COUNTY | TOTAL SHEETS | SHEET NO. |
|---|---|---|---|---|
| 1509 | 06-00133-00-BR | DuPAGE | 426 | 105 |

CONTRACT NO. 61G79

ILLINOIS FED. AID PROJECT

## SCHEDULE OF QUANTITIES

| PAY ITEM NAME | UNIT | QTY TOTAL | NORTH AURORA RD & EOLA RD | NORTH AURORA RD & GENESEE RD | NORTH AURORA RD & PENSBURY LN | NORTH AURORA RD & FRONTENAC RD | MOT / DETOUR ROUTE | INTERCONNECT | |
|---|---|---|---|---|---|---|---|---|---|
| ELECTRIC UTILITY SERVICE CONNECTION | L SUM | 1 | | | 0.50 | 0.50 | | | |
| UNDERGROUND CONDUIT, GALVANIZED STEEL, 2" DIA. | FOOT | 233 | | | | 233 | | | |
| UNDERGROUND CONDUIT, GALVANIZED STEEL, 4" DIA. | FOOT | 4,140 | | | | | | 4,140 | * |
| HANDHOLE | EACH | 4 | | | | 1 | | 3 | * |
| MAINTENANCE OF EXISTING TRAFFIC SIGNAL INSTALLATION | EACH | 2 | 2 | | | | | | |
| ELECTRIC CABLE IN CONDUIT, LEAD-IN, NO. 14 1 PAIR | FOOT | 1,070 | | | | 1,070 | | | |
| DRILL EXISTING HANDHOLE | EACH | 2 | | | | | | 2 | * |
| DRILL EXISTING HEAVY DUTY HANDHOLE | EACH | 4 | | | | 4 | | | |
| INDUCTIVE LOOP DETECTOR | EACH | 3 | | | | 3 | | | |
| DETECTOR LOOP, TYPE I | FOOT | 216 | | | | 216 | | | |
| TEMPORARY TRAFFIC SIGNAL INSTALLATION | EACH | 2 | | | 1 | 1 | | | |
| MODIFY EXISTING CONTROLLER CABINET | EACH | 1 | | | | 1 | | | |
| REMOVE EXISTING TRAFFIC SIGNAL EQUIPMENT | EACH | 1 | | | | 1 | | | |
| CONDUIT SPLICE | EACH | 1 | | | | 1 | | | |
| ACCESSIBLE PEDESTRIAN SIGNALS | EACH | 16 | | | 8 | 8 | | | |
| RE-OPTIMIZE TRAFFIC SIGNAL SYSTEM LEVEL 1 | EACH | 1 | | | | 1 | | | |
| TEMPORARY TRAFFIC SIGNAL TIMING | EACH | 5 | | | 1 | 1 | 3 | | |

* 100% OF INTERCONNECT COST SHALL BE PAID BY CITY OF NAPERVILLE

## TRAFFIC SIGNAL GENERAL NOTES:

1. IT SHALL BE THE CONTRACTOR'S RESPONSIBILITY TO VERIFY ALL DIMENSIONS AND CONDITIONS EXISTING IN THE FIELD PRIOR TO ORDERING MATERIALS AND BEGINNING CONSTRUCTION.
2. THE EXACT LOCATION OF ALL UTILITES SHALL BE FIELD VERIFIED BY THE CONTRACTOR BEFORE ORDERING ANY MATERIALS AND STARTING ANY WORK. FOR LOCATIONS OF UTILITIES, LOCALLY OWNED EQUIPMENT, LEASED ENFORCEMENT CAMERA SYSTEM FACILITIES AND UNDERGROUND FACILITIES, CONTACT THE LOCAL COUNTIES, MUNICIPALITIES AND IDOT FOR LOCATES. THE CONTRACTOR SHALL CALL "JULIE" AT (800) 892-0123 OR 811, FOR FIELD LOCATIONS OF BURIED UTILITIES (48 HOURS NOTIFICATION REQUIRED).
3. THE CONTRACTOR SHALL CHECK THE TRAFFIC SIGNAL EQUIPMENT LOCATIONS FOR OVERHEAD UTILITY CONFLICTS. THE CONTRACTOR SHALL COORDINATE ANY CONFLICTS WITH THE UTILITY COMPANIES AND THE RESIDENT ENGINEER BEFORE ORDERING MATERIALS.
4. THE CONTRACTOR SHALL COORDINATE CONSTRUCTION ACTIVITIES WITH UTILITY COMPANIES, LOCAL GOVERNMENT AGENCIES AND IDOT.
5. MATERIAL SUBMITTALS FOR THE NORTH AURORA ROAD - PENNSBURY LANE SIGNAL SHALL BE REVIEWED BY THE CITY OF AURORA AND/OR AN AUTHORIZED REPRESENTATIVE PRIOR TO BEING SUBMITTED FOR LOCAL ROADS REVIEW.

## TEMPORARY TRAFFIC SIGNAL GENERAL NOTES:

1. ONLY CONTROLLERS SUPPLIED BY ONE OF THE DISTRICT APPROVED CLOSED LOOP EQUIPMENT MANUFACTURERS WILL BE APPROVED FOR USE AT TEMPORARY SIGNAL LOCATIONS. ALL CONTROLLERS USED FOR TEMPORARY TRAFFIC SIGNALS SHALL BE FULLY ACTUATED NEMA MICROPROCESSOR BASED WITH RS232 DATA ENTRY PORTS COMPATIBLE WITH EXISTING MONITORING SOFTWARE APPROVED BY IDOT DISTRICT 1, INSTALLED IN A NEMA TS1 OR TS2 CABINET.
2. ALL TRAFFIC SIGNAL SECTIONS AND PEDESTRIAN SIGNAL SECTIONS SHALL BE 12". HEADS SHALL BE PLACED AS INDICATED ON THE TEMPORARY TRAFFIC SIGNAL PLAN OR AS DIRECTED BY THE ENGINEER. THE CONTRACTOR SHALL FURNISH ENOUGH CABLE SLACK TO RELOCATE HEADS TO ANY OTHER POSITION ON THE SPAN WIRE OR AT LOCATIONS ILLUSTRATED ON THE PLANS FOR CONSTRUCTION STAGING. THE TEMPORARY TRAFFIC SIGNAL SHALL REMAIN IN OPERATION DURING ALL SIGNAL HEAD RELOCATIONS. EACH TEMPORARY TRAFFIC SIGNAL HEAD SHALL HAVE ITS OWN CABLE FROM THE CONTROLLER CABINET TO THE SIGNAL HEAD.
3. ANY TEMPORARY SIGNAL WITHIN AN EXISTING CLOSED LOOP TRAFFIC SIGNAL SYSTEM SHALL BE INTERCONNECTED TO THAT SYSTEM USING SIMILAR BRAND CONTROLLER EQUIPMENT.
4. ALL CONTROL EQUIPMENT INCLUDING EMERGENCY PRE-EMPTION AND COMMUNICATION DEVICES FOR THE TEMPORARY TRAFFIC SIGNAL(S) SHALL BE FURNISHED BY THE CONTRACTOR, EXCEPT AS NOTED IN THE PLANS.
5. ANY TEMPORARY TRAFFIC SECTIONS NOT IN USE DURING A STAGE OF CONSTRUCTION SHALL BE BAGGED AND DEACTIVATED.
6. ALL VIDEO DETECTION ZONES ARE TO BE REDEFINED DURING EACH STAGE OF CONSTRUCTION AND ARE TO BE INCLUDED IN THE PAY ITEM OF TEMPORARY TRAFFIC SIGNAL INSTALLATION.
7. IF TEMPORARY TRAFFIC SIGNALS ARE IN CONFLICT WITH THE PERMANENT TRAFFIC SIGNALS, THE MAST ARMS SHALL BE ROTATED OR REMOVED AND STORED OUTSIDE OF R.O.W. AND WILL BE THE CONTRACTOR'S RESPONSIBILITY TO KEEP EQUIPMENT SAFE. THIS IS TO BE INCLUDED IN THE PAY ITEM OF TEMPORARY TRAFFIC SIGNAL INSTALLATION.
8. IF ANY CONSTRUCTION STAGE CHANGE WILL IMPACT THE TRAFFIC SIGNAL OPERATIONS, THE CONTRACTOR SHALL LET THE ENGINEER KNOW THREE DAYS PRIOR TO THE DATE OF CHANGE.
9. THE RADIO INTERCONNECT SHALL OPERATE PROPERLY AT ALL TIMES AND DURING ALL CONSTRUCTION STAGES. IF WIRELESS INTERCONNECT FAILS DURING TESTING OR OPERATIONS, THE CONTRACTOR SHALL BE RESPONSIBLE FOR INSTALLING THE NECESSARY POLES, FIBER OPTIC CABLE AND OTHER INFRASTRUCTURE PROVIDING TEMPORARY FIBER INTERCONNECT AT NO COST TO THE CONTRACT.
10. PEDESTRIAN SIGNAL HEADS AND APS PUSH-BUTTONS SHALL BE PROVIDED FOR ALL CROSSWALKS THAT ARE ACTIVE DURING THE CONSTRUCTION STAGE. APS PEDESTRIAN PUSH-BUTTONS MAY BE LOCATED ON BARREL MOUNTED POSTS OR TEMPORARY SIGNAL WOOD POLES, HOWEVER ALL ACTIVE PEDESTRIAN SIGNALS AND APS PUSH-BUTTONS SHALL MEET THE REQUIREMENTS OF DISTRICT ONE STANDARD TRAFFIC SIGNAL DESIGN DETAILS. THIS MAY BE ACCOMPLISHED BY RELOCATING THE BARREL MOUNTED POSTS, APS PUSH-BUTTON BRACKET EXTENSIONS, PROVIDING TEMPORARY SIDEWALK SURFACE, OR A COMBINATION OF THESE METHODS. REFER TO TEMPORARY TRAFFIC SIGNAL INSTALLATION PLANS FOR SUGGESTED LOCATIONS OF PEDESTRIAN SIGNALS AND APS PUSH-BUTTONS, WHICH MAY BE MODIFIED AS NEEDED OR AS DIRECTED BY THE ENGINEER. THE COST OF THIS WORK SHALL BE INCLUDED IN THE UNIT COST FOR TEMPORARY TRAFFIC SIGNAL INSTALLATION.
11. REFER TO TEMPORARY CABLE PLANS AND TEMPORARY PHASE DESIGNATION DIAGRAMS FOR ACTIVE PEDESTRIAN PHASES UNDER EACH CONSTRUCTION STAGE. INACTIVE PEDESTRIAN SIGNAL HEADS SHALL BE DE-ENERGIZED AND BAGGED. INACTIVE PUSH-BUTTONS SHALL BE DE-ENERGIZED AND COVERED OR REMOVED. THE COST OF THIS WORK SHALL BE INCLUDED IN THE UNIT COST FOR TEMPORARY TRAFFIC SIGNAL INSTALLATION.
12. THE TEMPORARY TRAFFIC SIGNAL CONTROLLER FOR THIS PROJECT SHALL BE "ECONOLITE" TO MATCH EXISTING EQUIPMENT.

PLAN | BY | DATE
SURVEYED ____
PLOTTED ____
ALIGNMENT CHECKED ____
RT. OF WAY CHECKED ____
CADD FILE NAME ____
NOTE BOOK NO. ____

PROFILE | BY | DATE
SURVEYED ____
PLOTTED ____
GRADES CHECKED ____
B.M. NOTED ____
STRUCTURE NOTAT'NS CH'KD ____
NOTE BOOK NO. ____

FILE NAME = 0600932-sht-TS001i.dgn

TRANSYSTEMS

| | | | |
|---|---|---|---|
| USER NAME = brvanderwal | DESIGNED - GR | REVISED - | |
| | DRAWN - GR | REVISED - | |
| PLOT SCALE = 40.0000 ' / in. | CHECKED - BVW | REVISED - | |
| PLOT DATE = 1/25/2025 | DATE - 1/25/2025 | REVISED - | |

STATE OF ILLINOIS
DEPARTMENT OF TRANSPORTATION

NORTH AURORA ROAD – PENSBURY LANE TO FRONTENAC ROAD
TRAFFIC SIGNAL
SCHEDULE OF QUANTITIES

SCALE: NONE | SHEET 1 OF 32 SHEETS | STA. TO STA.

| F.A.U. RTE. | SECTION | COUNTY | TOTAL SHEETS | SHEET NO. |
|---|---|---|---|---|
| 1509 | 06-00133-00-BR | DuPAGE | 426 | 106 |

CONTRACT NO. 61G79

ILLINOIS FED. AID PROJECT

# TRAFFIC SIGNAL LEGEND

**(NOT TO SCALE)**

| ITEM | EXISTING | PROPOSED |
|---|---|---|
| CONTROLLER CABINET | | |
| COMMUNICATION CABINET | ECC | CC |
| MASTER CONTROLLER | EMC | MC |
| MASTER MASTER CONTROLLER | EMMC | MMC |
| UNINTERRUPTABLE POWER SUPPLY | | |
| SERVICE INSTALLATION<br>-(P) POLE MOUNTED | P | P |
| SERVICE INSTALLATION<br>-(G) GROUND MOUNTED<br>-(GM) GROUND MOUNTED METERED | G GM | G GM |
| TELEPHONE CONNECTION | ET | T |
| STEEL MAST ARM ASSEMBLY AND POLE | | |
| ALUMINUM MAST ARM ASSEMBLY AND POLE | | |
| STEEL COMBINATION MAST ARM ASSEMBLY AND POLE WITH LUMINAIRE | | |
| SIGNAL POST<br>-(BM) BARREL MOUNTED - TEMPORARY | | BM |
| WOOD POLE | | |
| GUY WIRE | | |
| SIGNAL HEAD | | |
| SIGNAL HEAD WITH BACKPLATE | | |
| SIGNAL HEAD OPTICALLY PROGRAMMED | P P | P P |
| FLASHER INSTALLATION<br>-(FS) SOLAR POWERED | F FS<br>F FS | F FS<br>F FS |
| PEDESTRIAN SIGNAL HEAD | | |
| PEDESTRIAN PUSH BUTTON<br>-(APS) ACCESSIBLE PEDESTRIAN PUSH BUTTON | APS | APS |
| RADAR DETECTION SENSOR | R | R |
| VIDEO DETECTION CAMERA | V | V |
| RADAR/VIDEO DETECTION ZONE | | |
| PAN, TILT, ZOOM (PTZ) CAMERA | PTZ | PTZ |
| EMERGENCY VEHICLE LIGHT DETECTOR | | |
| CONFIMATION BEACON | | |
| WIRELESS INTERCONNECT | | |
| WIRELESS INTERCONNECT RADIO REPEATER | ERR | RR |

| ITEM | EXISTING | PROPOSED |
|---|---|---|
| HANDHOLE<br>-SQUARE<br>-ROUND | | |
| HEAVY DUTY HANDHOLE<br>-SQUARE<br>-ROUND | H H | H H |
| DOUBLE HANDHOLE | | |
| JUNCTION BOX | | |
| RAILROAD CANTILEVER MAST ARM | | |
| RAILROAD FLASHING SIGNAL | | |
| RAILROAD CROSSING GATE | | |
| RAILROAD CROSSBUCK | | |
| RAILROAD CONTROLLER CABINET | | |
| UNDERGROUND CONDUIT (UC), GALVANIZED STEEL | | |
| TEMPORARY SPAN WIRE, TETHER WIRE, AND CABLE | | |
| SYSTEM ITEM | S | SP |
| INTERSECTION ITEM | I | IP |
| REMOVE ITEM | | R |
| RELOCATE ITEM | | RL |
| ABANDON ITEM | | A |
| CONTROLLER CABINET AND FOUNDATION TO BE REMOVED | | RCF |
| MAST ARM POLE AND FOUNDATION TO BE REMOVED | | RMF |
| SIGNAL POST AND FOUNDATION TO BE REMOVED | | RPF |
| DETECTOR LOOP, TYPE I | | |
| PREFORMED DETECTOR LOOP | P P | P P |
| SAMPLING (SYSTEM) DETECTOR | S S | S S |
| INTERSECTION AND SAMPLING (SYSTEM) DETECTOR | IS IS | IS IS |
| QUEUE AND SAMPLING (SYSTEM) DETECTOR | QS QS | QS QS |
| WIRELESS DETECTOR SENSOR | W | W |
| WIRELESS ACCESS POINT | | |

| ITEM | EXISTING | PROPOSED |
|---|---|---|
| SIGNAL HEAD<br>-(P) PROGRAMMABLE SIGNAL HEAD | R Y G Y G<br>P | R Y G Y G<br>P |
| SIGNAL HEAD WITH BACKPLATE<br>-(P) PROGRAMMABLE SIGNAL HEAD<br>-(RB) RETROREFLECTIVE BACKPLATE | R Y G Y G<br>P RB | R Y G Y G<br>P RB |
| PEDESTRIAN SIGNAL HEAD AT RAILROAD INTERSECTIONS | | |
| PEDESTRIAN SIGNAL HEAD WITH COUNTDOWN TIMER | C D | C D |
| ILLUMINATED SIGN<br>"NO LEFT TURN"/"NO RIGHT TURN" | | |
| NUMBER OF CONDUCTORS, ELECTRIC CABLE NO. 14, UNLESS NOTED OTHERWISE. ALL DETECTOR LOOP CABLE TO BE SHIELDED | 5 | 5 |
| GROUND CABLE IN CONDUIT, NO. 6 SOLID COPPER (GREEN) | 1#6 | 1#6 |
| ELECTRIC CABLE IN CONDUIT, TRACER NO. 14 1/C | 1 | 1 |
| COAXIAL CABLE | C | C |
| VENDOR CABLE | V | V |
| COPPER INTERCONNECT CABLE, NO. 18, 3 PAIR TWISTED, SHIELDED | 6#18 | 6#18 |
| FIBER OPTIC CABLE<br>-NO. 62.5/125, MM12F<br>-NO. 62.5/125, MM12F SM12F<br>-NO. 62.5/125, MM12F SM24F | 12F<br>24F<br>36F | 12F<br>24F<br>36F |
| GROUND ROD<br>-(C) CONTROLLER<br>-(M) MAST ARM<br>-(P) POST<br>-(S) SERVICE | C M P S | C M P S |

| | | | | | |
|---|---|---|---|---|---|
| FILE NAME = ts05.dgn | USER NAME = leysa | DESIGNED - GR | REVISED - | STATE OF ILLINOIS<br>DEPARTMENT OF TRANSPORTATION | DISTRICT ONE<br>STANDARD TRAFFIC SIGNAL DESIGN DETAILS |
| | | DRAWN - GR | REVISED - | | |
| | PLOT SCALE = 50.0000 ' / in. | CHECKED - BVW | REVISED - | | |
| Default | PLOT DATE = 9/29/2016 | DATE - 1/25/2025 | REVISED - | | SCALE: NONE · SHEET 2 OF 32 SHEETS · STA. TO STA. |

| F.A.U. RTE. | SECTION | COUNTY | TOTAL SHEETS | SHEET NO. |
|---|---|---|---|---|
| 1509 | 06-00133-00-BR | DuPAGE | 426 | 107 |
| | TS-05 | CONTRACT NO. | | |
| | | ILLINOIS FED. AID PROJECT | | |

## LOOP DETECTOR NOTES

1. EACH PAIR OF LOOP WIRES SHALL BE PLACED IN A SEPARATE EMPTY COILABLE NONMETALLIC CONDUIT FROM THE EDGE OF PAVEMENT TO THE HANDHOLE. SPACING BETWEEN THE HOLES DRILLED IN THE PAVEMENT SHALL NOT BE LESS THAN 6" (150 mm). EMPTY COILABLE NONMETALLIC CONDUIT SHALL BE INCLUDED IN THE COST OF THE LOOP WIRE.

2. THE NUMBER OF LOOP TURNS SHALL BE AS RECOMMENDED BY THE AMPLIFIER MANUFACTURER. ALL ADJACENT SIDES OF THE LOOPS SHALL BE INSTALLED IN SUCH A WAY THAT THE CURRENT FLOW IS IN THE SAME DIRECTION TO REINFORCE ITS MAGNETIC FIELDS FOR SMALL VEHICLE DETECTION.

3. EACH LOOP LEAD-IN SHALL BE IDENTIFIED AND PERMANENTLY TAGGED IN THE HANDHOLE. EACH LEAD-IN CABLE TAG SHALL INDICATE THE LOCATION OF THE LOOP, LOOP ROTATION (CLOCKWISE/COUNTERCLOCKWISE), LOOP LEAD-IN DIRECTION (IN OR OUT), LOOP CABLE NUMBER AND LOCATION IN CABINET, AND NUMBER OF TURNS IN THE DETECTOR LOOPS IN WATER PROOF INK AS INDICATED ON THE DISTRICT 1 STANDARD TRAFFIC SIGNAL DESIGN DETAIL. THE CONTRACTOR SHALL MARK LOOP LOCATIONS ON RECORD DRAWINGS AND PRESENT TO THE ENGINEER AFTER FINAL INSPECTION. LOOPS SHALL BE MARKED BY LANE AND LOOP NUMBER. SEE DETAIL BELOW.

4. ALL LOOP CABLE SHALL BE FASTENED WITH PLASTIC TIE WRAP TO THE HANDHOLE HOOKS.

5. IN ASPHALT PAVEMENT, LOOPS SHOULD BE PLACED IN THE BINDER AND DIVEHOLES MARKED AT THE CURB WITH A SAW-CUT. THE SAW-CUT SHALL BE CUT IN ACCORDANCE WITH LOCAL AND E.P.A. DUST CONTROL REQUIREMENTS. DETECTOR LOOP(S) SHALL NOT BE INSTALLED IN WET CONDITIONS AND THE SAW-CUTS MUST BE FREE OF DEBRIS AND RESIDUE SUCH AS DUST AND WATER WHICH IS TO BE ACHIEVED BY THE USE OF COMPRESSED AIR, WIRE BRUSHING AND HEAT DRYING ACCORDING TO SEALANT MANUFACTURER REQUIREMENTS. THE DETECTOR WIRE SHALL BE HELD IN PLACE BY THE USE OF FORM WEDGES. WEDGES SHALL BE SPACED NO MORE THAN 18" (450 mm) APART.

6. LOOP SPLICES SHALL BE SOLDERED USING A SOLDERING IRON. BLOW TORCHES OR OTHER DEVICES WHICH OXIDIZE COPPER CABLE SHALL NOT BE ALLOWED FOR SOLDERING OPERATIONS. SEE DETAIL BELOW RIGHT.

7. PREFORMED DETECTOR LOOPS SHALL BE USED, AS SHOWN ON THE PLANS, WHERE NEW CONCRETE PAVEMENT IS PROPOSED. THE INSTALLATION OF PREFORMED LOOPS SHALL BE IN ACCORDANCE WITH THE DISTRICT 1 SPECIFICATIONS OR AS DIRECTED BY THE ENGINEER.

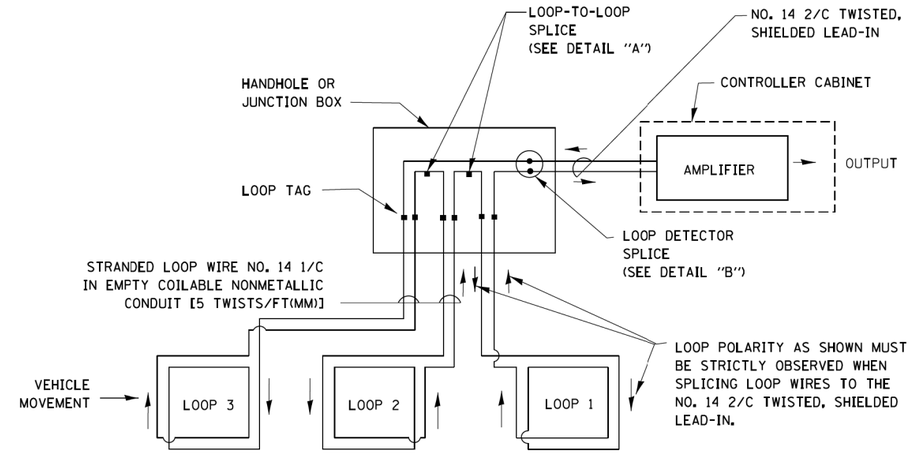


## DETECTOR LOOP WIRING SCHEMATIC

- LOOPS SHALL BE SPLICED IN SERIES.
- SAW-CUTS SHALL BE A MINIMUM WIDTH OF 5/16" (8 mm).
- SAW-CUT DEPTHS SHALL BE 3" (75 mm). IF IN CONCRETE, THE SAW-CUT DEPTH SHALL BE TO THE TOP OF THE REINFORCEMENT.
- LOOP CORNERS SHALL BE DRILLED WITH A 2" (50 mm) DIAMETER CORE.

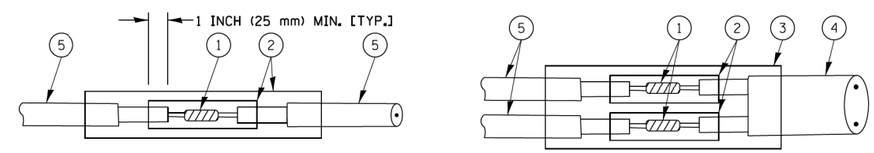


DETAIL "A"
LOOP-TO-LOOP SPLICE

DETAIL "B"
LOOP-TO-CONTROLLER SPLICE

## TYPE I LOOP

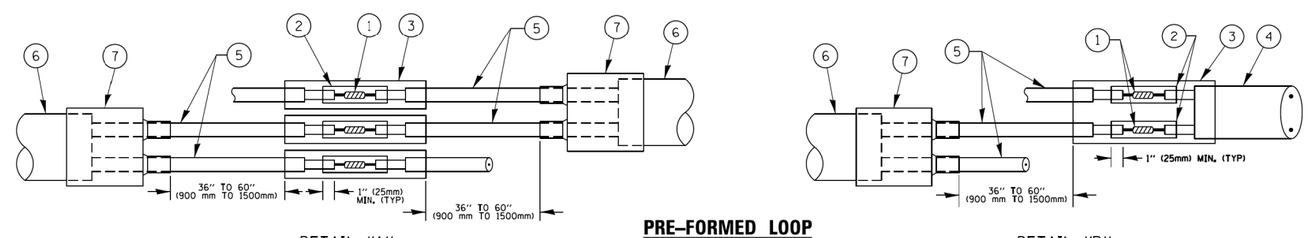


DETAIL "A"
LOOP-TO-LOOP SPLICE

## PRE-FORMED LOOP

DETAIL "B"
LOOP-TO-CONTROLLER SPLICE

## LOOP LEAD-IN CABLE TAG

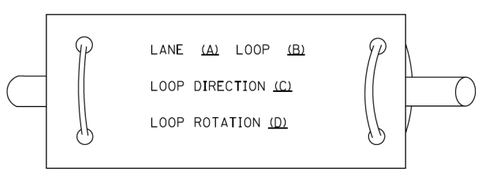


A. LANE 1 IS THE LANE CLOSEST TO THE CENTERLINE OF THE ROADWAY

B. LOOP #1 IS THE LOOP IN THE LANE CLOSEST TO THE INTERSECTION.

C. LABEL LOOP CABLE "IN" OR LOOP CABLE "OUT".

D. LABEL LOOP CABLE CLOCKWISE OR LOOP CABLE COUNTERCLOCKWISE.

## LOOP DETECTOR SPLICE

1. WESTERN UNION SPLICE SOLDERED WITH ROSIN CORE FLUX. ALL EXPOSED SURFACES OF THE SOLDER SHALL BE SMOOTH. THE WESTERN UNION SPLICES SHALL BE STAGGERED.
2. WCSMW 30/100 HEAT SHRINK TUBE, MINIMUM LENGTH 3" (75 mm), UNDERWATER GRADE.
3. WCS 200/750 HEAT SHRINK TUBE, MINIMUM LENGHT 6" (150 mm), UNDERWATER GRADE.
4. NO. 14 2/C TWISTED, SHIELDED CABLE.
5. LOOP CONDUCTOR WITH FLEXIBLE PLASTIC TUBE.
6. PRE-FORMED LOOP
7. XL POLYOLEFIN 2 CONDUCTOR BREAKOUT SEALS. TYCO CBR-2 OR APPROVED EQUAL

## TRAFFIC SIGNAL MAST ARM AND SIGNAL POST

**MAST ARM MOUNTED SIGNALS IN EXISTING, PROPOSED OR FUTURE SIDEWALK/BICYCLE PATH AREA. INTERSECTION SHOWN WITH PEDESTRIAN SIGNALS AND PEDESTRIAN PUSHBUTTON DETECTORS.**

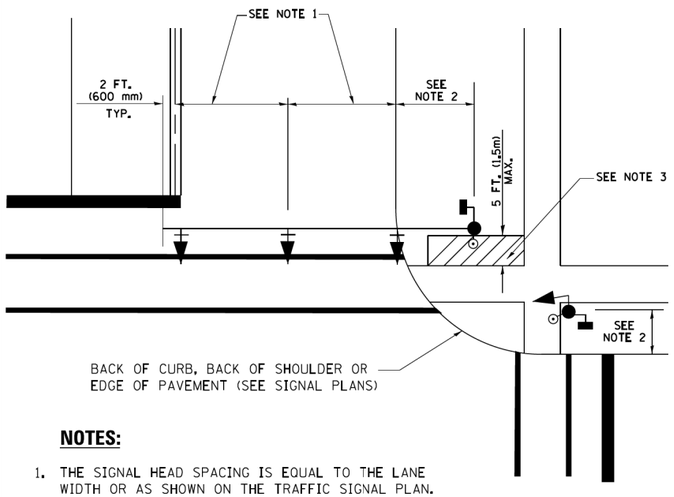


### NOTES:

1. THE SIGNAL HEAD SPACING IS EQUAL TO THE LANE WIDTH OR AS SHOWN ON THE TRAFFIC SIGNAL PLAN.
2. REFER TO THE TRAFFIC SIGNAL EQUIPMENT OFFSET TABLE.
3. PROVIDE A LEVEL ALL-WEATHER SURFACE (CONCRETE SIDEWALK, ASPHALT BICYCLE PATH SURFACE OR MATCHING MATERIAL TO THE ADJACENT SURFACE) UP TO THE MAST ARM SHAFT OR THE SIGNAL POST.
4. THE FACE OF THE PEDESTRIAN PUSHBUTTON SHALL BE PARALLEL TO THE CROSSWALK TO BE USED.
5. THE LOCATIONS AND INSTALLATION OF PEDESTRIAN SIGNAL HEADS AND PEDESTRIAN PUSHBUTTONS SHALL MEET THE REQUIREMENTS OF THE MUTCD AND INFORMATION FOUND IN THE "AMERICANS WITH DISABILITIES ACT ACCESSIBILITY GUIDELINES FOR BUILDINGS AND FACILITIES."

## PEDESTRIAN SIGNAL POST AND PEDESTRIAN PUSH BUTTON POST

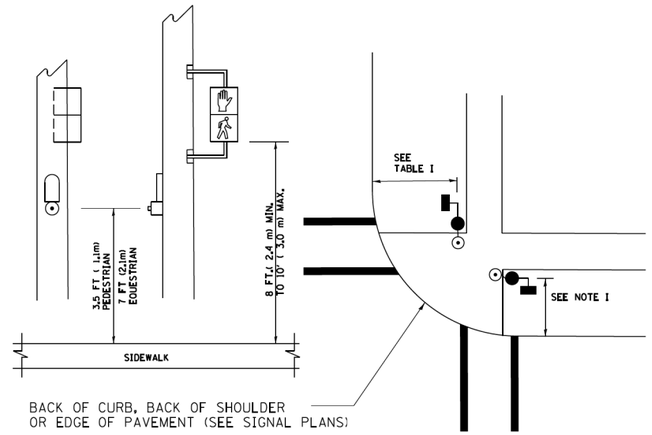


### NOTES:

1. REFER TO THE TRAFFIC SIGNAL EQUIPMENT OFFSET TABLE.
2. PROVIDE A LEVEL ALL-WEATHER SURFACE (CONCRETE SIDEWALK, ASPHALT BICYCLE PATH SURFACE OR MATCHING MATERIAL TO THE ADJACENT SURFACE) UP TO THE PEDESTRIAN SIGNAL POST OR THE PEDESTRIAN PUSH BUTTON POST.
3. THE FACE OF THE PEDESTRIAN PUSHBUTTON SHALL BE PARALLEL TO THE CROSSWALK TO BE USED.
4. THE LOCATIONS AND INSTALLATION OF PEDESTRIAN SIGNAL HEADS AND PEDESTRIAN PUSHBUTTONS SHALL MEET THE REQUIREMENTS OF THE MUTCD AND INFORMATION FOUND IN THE "AMERICANS WITH DISABILITIES ACT ACCESSIBILITY GUIDELINES FOR BUILDINGS AND FACILITIES."

## RECOMMENDED PUSHBUTTON LOCATIONS

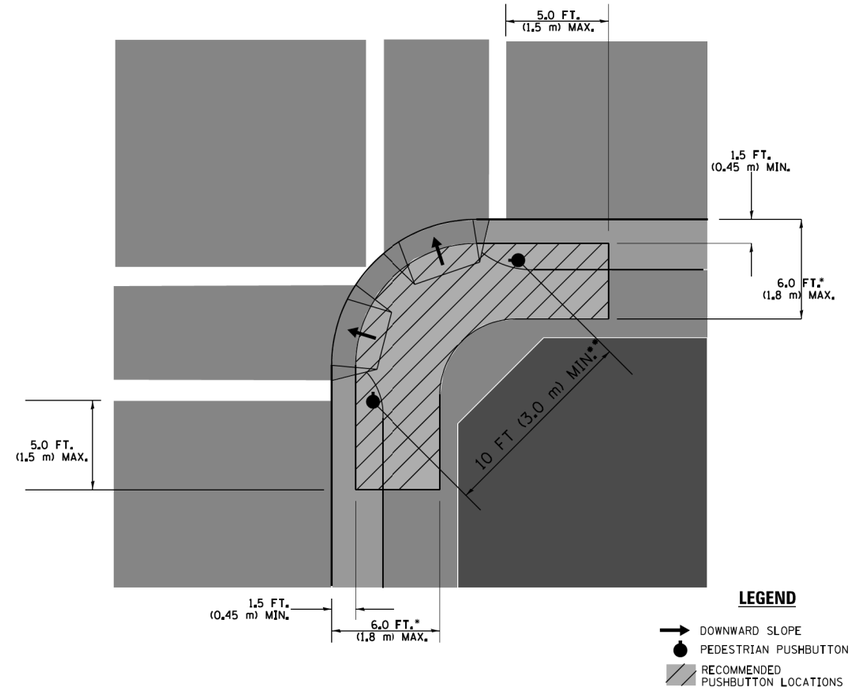


* WHERE THERE ARE CONSTRAINTS THAT MAKE IT IMPRACTICAL TO PLACE THE PEDESTRIAN PUSHBUTTON BETWEEN 1.5 FT (0.45 m) AND 6 FT ( 1.8 m) FROM THE EDGE OF THE CURB, SHOULDER, OR PAVEMENT, IT SHOULD NOT BE FURTHER THAN 10 FT (3 m) FROM THE EDGE OF CURB, SHOULDER, OR PAVEMENT.

** WHERE THERE ARE CONSTRAINTS ON A PARTICULAR CORNER THAT MAKE IT IMPRACTICAL TO PROVIDE THE 10 FT (3 m) SEPERATION BETWEEN THE TWO PEDESTRIAN PUSHBUTTONS, THE PUSHBUTTONS MAY BE PLACED CLOSER TOGETHER OR ON THE SAME POLE.

### NOTES:

1. PEDESTRIAN SIGNAL HEADS SHALL BE MOUNTED WITH THE BOTTOM OF THE SIGNAL HOUSING INCLUDING BRACKETS NOT LESS THAN 8 FT (2.4 m) OR MORE THAN 10 FT (3 m) ABOVE SIDEWALK LEVEL, AND SHALL BE POSITIONED AND ADJUSTED TO PROVIDE MAXIMUM VISIBILITY AT THE BEGINNING OF THE CONTROLLED CROSSWALK.
2. THE BOTTOM OF THE SIGNAL HOUSING (INCLUDING BRACKETS) OF A VEHICULAR SIGNAL FACE THAT IS NOT LOCATED OVER A HIGHWAY SHALL BE AT LEAST 8 FT (2.4 m) BUT NOT MORE THAN 19 FT (5.8 m) ABOVE THE SIDEWALK OR, IF THERE IS NO SIDEWALK, ABOVE THE PAVEMENT GRADE AT THE CENTER OF THE ROADWAY.
3. THE BOTTOM OF THE SIGNAL HOUSING AND ANY RELATED ATTACHMENTS TO A SIGNAL FACE LOCATED OVER ANY PORTION OF A HIGHWAY SHALL BE ACCORDING TO CURRENT STATE STANDARDS 877001, 877002, 877006, 877011 AND 877012 WITH A MINIMUM OF 16 FT (5.0 m) AND A MAXIMUM OF 18 FT. (5.5 m) FROM THE HIGHEST POINT OF PAVEMENT.
4. THE BOTTOM OF THE TEMPORARY SPAN WIRE MOUNTED SIGNAL HOUSING AND ANY RELATED ATTACHMENTS TO A SIGNAL FACE LOCATED OVER ANY PORTION OF A HIGHWAY SHALL BE ACCORDING TO CURRENT STATE STANDARD 880001 WITH A MINIMUM OF 17 FT (5.18 m) FROM THE HIGHEST POINT OF PAVEMENT.
5. THE TOP OF THE SIGNAL HOUSING OF A SIGNAL FACE LOCATED OVER ANY PORTION OF A HIGHWAY SHALL NOT BE MORE THAN 25.6 FT (7.8 m) ABOVE THE PAVEMENT.

TRAFFIC SIGNAL EQUIPMENT OFFSET

| TRAFFIC SIGNAL EQUIPMENT | COMBINATION CONCRETE CURB AND GUTTER (MINIMUM DISTANCE FROM BACK OF CURB TO CENTERLINE OF FOUNDATION) | SHOULDER/NON-CURBED AREA (MINIMUM DISTANCE FROM EDGE OF PAVEMENT TO CENTERLINE OF FOUNDATION) |
|---|---|---|
| TRAFFIC SIGNAL MAST ARM POLE | 6 FT (1.8m) | SHOULDER WIDTH + 2 FT (0.6m), MINIMUM 10 FT (3.0m) |
| TRAFFIC SIGNAL POST | 4 FT (1.2m) | SHOULDER WIDTH + 2 FT (0.6m), MINIMUM 10 FT (3.0m) |
| PEDESTRIAN SIGNAL POST | 4 FT (1.2m) | SHOULDER WIDTH + 2 FT (0.6m), MINIMUM 10 FT (3.0m) |
| PEDESTRIAN PUSHBUTTON POST | 4 FT (1.2m) | SHOULDER WIDTH + 2 FT (0.6m), MINIMUM 10 FT (3.0m) |
| TEMPORARY WOOD POLE | 6 FT (1.8m) | SHOULDER WIDTH + 2 FT (0.6m), MINIMUM 10 FT (3.0m) |
| CONTROLLER CABINET | 6 FT (1.8m) MINIMUM DISTANCE SEE NOTE 2 | SHOULDER WIDTH + 6 FT (1.8m), MINIMUM 16 FT (4.9m) SEE NOTE 3. |
| SERVICE INSTALLATION, GROUND MOUNT | 6 FT (1.8m) MINIMUM DISTANCE SEE NOTE 2 | SHOULDER WIDTH + 6 FT (1.8m), MINIMUM 16 FT (4.9m) SEE NOTE 3. |

### NOTES:

1. CONTACT THE "AREA TRAFFIC SIGNAL MAINTENANCE AND OPERATIONS ENGINEER" FOR ASSISTANCE IN LOCATING THE TRAFFIC SIGNAL EQUIPMENT WHEN THERE ARE CONFLICTS WITH DITCHES OR THE MINIMUM OFFSET DISTANCES CANNOT BE MET.
2. MINIMUM DISTANCE FROM THE BACK OF CURB TO THE ROADWAY SIDE OF THE FOUNDATION.
3. MINIMUM DISTANCE FROM THE EDGE OF PAVEMENT TOTHE ROADWAY SIDE OF THE FOUNDATION.
4. ANY CHANGES TO THE OFFSETS OF THE FOUNDATIONS, FROM THE MINIMUM DISTANCES LISTED IN THE "TRAFFIC SIGNAL EQUIPMENT OFFSET" CHART AND THE TRAFFIC SIGNAL INSTALLATION PLAN, COULD EFFECT THE PLACEMENT OF THE SIGNAL HEADS, PEDESTRIAN SIGNAL HEADS AND THE PEDESTRIAN PUSHBUTTONS. THE SIGNAL HEAD PLACEMENT ON THE MAST ARMS SHALL REMAIN AS PER THE TRAFFIC SIGNAL INSTALLATION PLAN AND THE "TRAFFIC SIGNAL MAST ARM AND SIGNAL POST" DETAIL ABOVE. THE PROPOSED MAST ARM LENGTHS MAY NEED TO BE REVISED TO MEET THE ABOVE REQUIREMENTS. THE PEDESTRIAN SIGNAL HEADS AND PEDESTRIAN PUSHBUTTONS MUST MEET THE REQUIREMENTS UNDER THE DETAILS ON THIS SHEET.

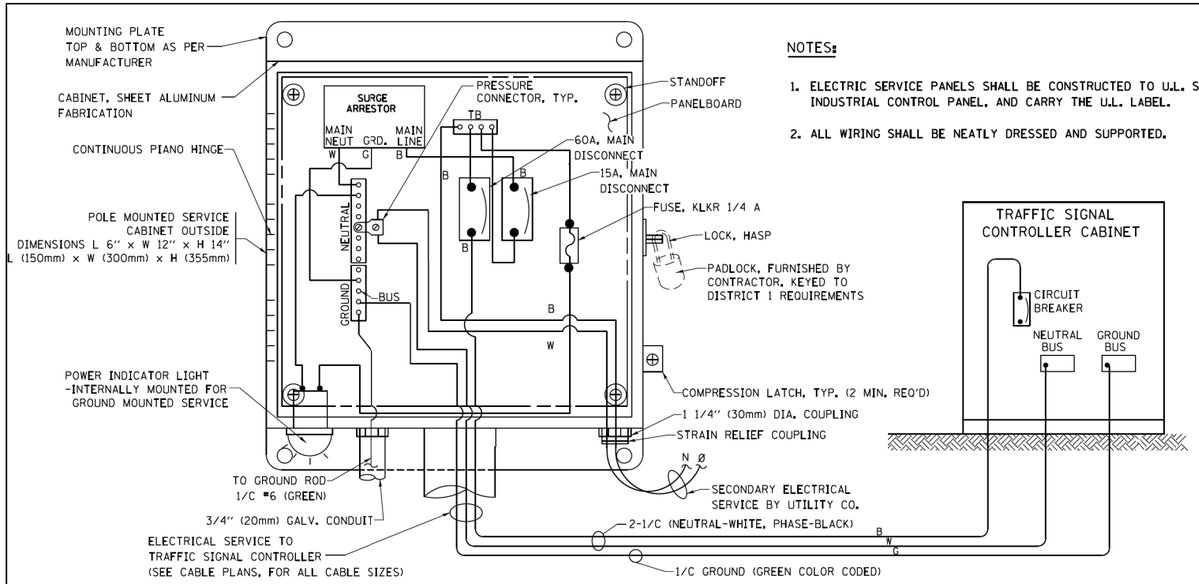


## NOTES:

1. ELECTRIC SERVICE PANELS SHALL BE CONSTRUCTED TO U.L. STD 508, INDUSTRIAL CONTROL PANEL, AND CARRY THE U.L. LABEL.
2. ALL WIRING SHALL BE NEATLY DRESSED AND SUPPORTED.

## ELECTRICAL SERVICE – PANEL DIAGRAM (TYPICAL FOR POLE AND GROUND MOUNTED SERVICE)
## SERVICE INSTALLATION POLE MOUNT (SHOWN)

(NOT TO SCALE)

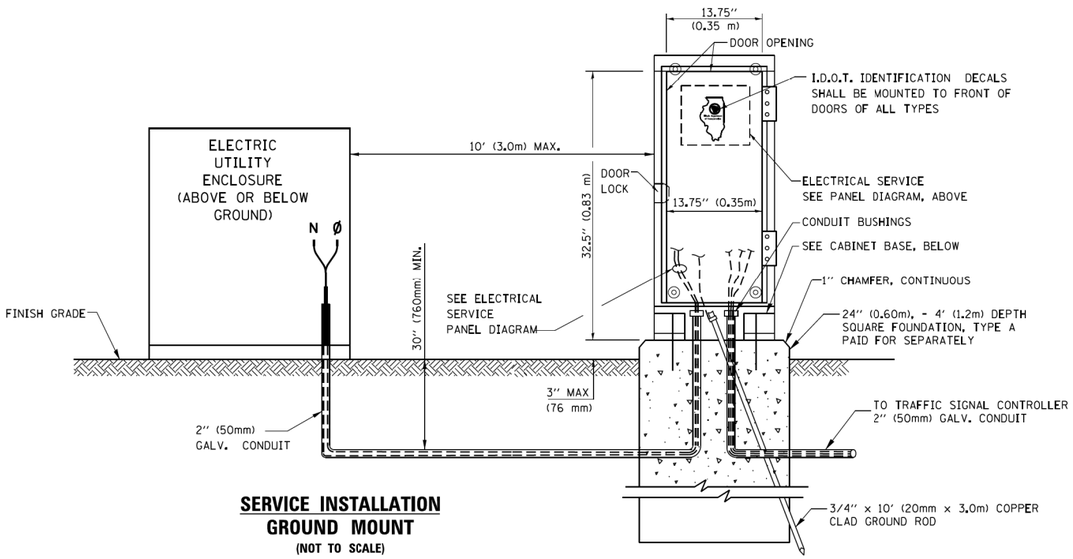


## SERVICE INSTALLATION
## GROUND MOUNT

(NOT TO SCALE)

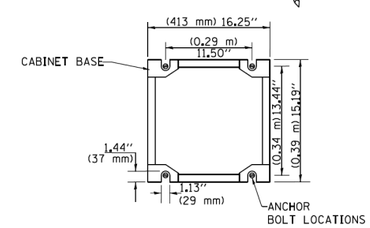


## CABINET – BASE BOLT PATTERN

(NOT TO SCALE)

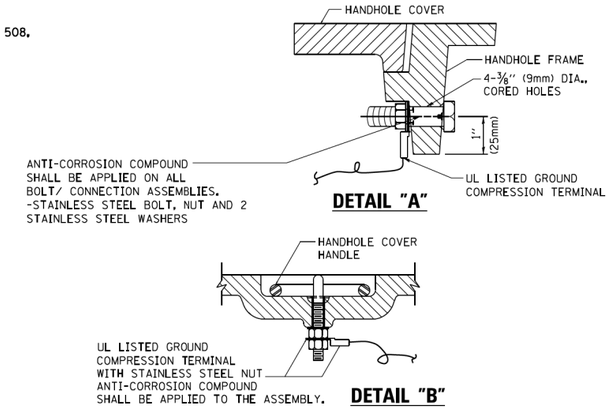


**DETAIL "A"**

**DETAIL "B"**

## NOTES:
## GROUNDING SYSTEM

1. THE GROUNDING SYSTEM SHALL CONSIST OF AN INSULATED CONDUCTOR TYPE XLP, NO. 6 A.W.G., STRANDED COPPER TO BE INSTALLED IN RACEWAYS. THE GROUNDING CABLE SHALL BE INSTALLED IN A CONTINUOUS MANNER AS SHOWN ON THE CABLE PLAN PROVIDED. ALL GROUNDING CONDUCTORS SHALL BE BONDED TO METAL ENCLOSURE (HANDHOLE, POST, MAST ARM, CONTROLLER, ETC.). GROUND ROD SHALL BE 3/4" DIA. x 10'-0" (20mm x 3.0m) LONG, COPPER CLAD. ONE GROUND ROD SHALL BE INSTALLED AT ALL POST FOUNDATIONS, POLE FOUNDATIONS, CONTROLLER CABINET FOUNDATION AND ELECTRICAL SERVICE INSTALLATION AS INDICATED ON THE CABLE PLAN. IF THERE ARE ANY SPECIAL CONDITIONS SUCH AS SUB-SURFACE CONDITIONS OR INSTALLATION PROBLEMS, THE RESIDENT ENGINEER SHALL BE NOTIFIED OR CONTACT THE BUREAU OF TRAFFIC, ILLINOIS DEPARTMENT OF TRANSPORTATION DISTRICT ONE AT (847) 705-4139.
2. THE NEUTRAL CONDUCTOR AND THE GROUND CONDUCTOR SHALL BE CONNECTED IN THE SERVICE INSTALLATION. AT NO OTHER POINT IN THE TRAFFIC SIGNAL SYSTEM SHALL THE NEUTRAL AND GROUND CONDUCTORS BE CONNECTED.
3. ALL EQUIPMENT GROUNDING CONDUCTORS SHALL TERMINATE AT THE GROUND BUS IN THE CONTROLLER CABINET.
4. THE CONTRACTOR SHALL PROVIDE A GROUND CABLE WITH CONNECTORS BETWEEN THE HANDHOLE COVER AND HANDHOLE FRAME.

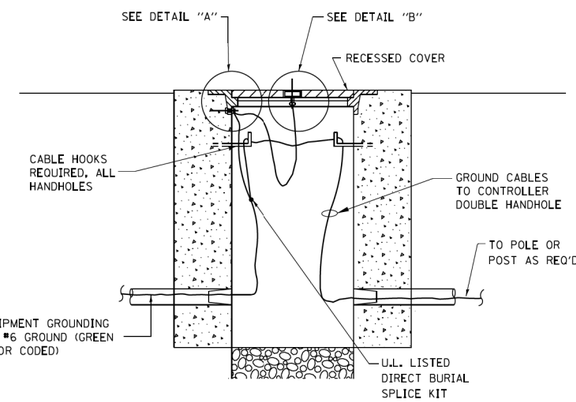


## HANDHOLE COVER & FRAME – GROUNDING DETAIL

(NOT TO SCALE)

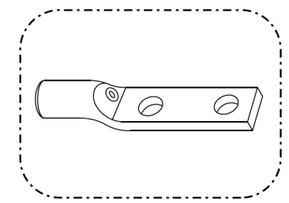

HEAVY-DUTY COMPRESSION TERMINAL
(BURNDY TYPE YGHA OR APPROVED EQUAL)

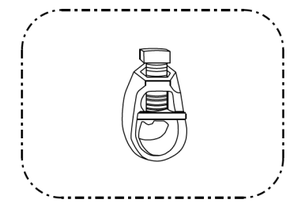

3/4" (20mm) HEAVY-DUTY GROUND ROD CLAMP
(BURNDY TYPE GRC OR APPROVED EQUAL)

## NOTES:

- ALL CLAMPS SHALL BE BRONZE OR COPPER, UL APPROVED.
- GROUND CABLE SHALL BE LOOPED OVER HOOKS IN THE HANDHOLES
  6.5' (2.0m) SLACK SHALL BE PROVIDED IN SINGLE HANDHOLES
  13' (4.0m) OF SLACK SHALL BE PROVIDED IN DOUBLE HANDHOLES.
  5' (1.4m) OF SLACK SHALL BE PROVIDED BETWEEN FRAME AND COVER.

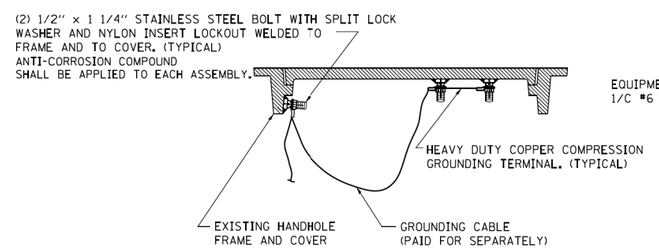


## EXISTING HANDHOLE COVER & FRAME – GROUNDING DETAIL

(NOT TO SCALE)

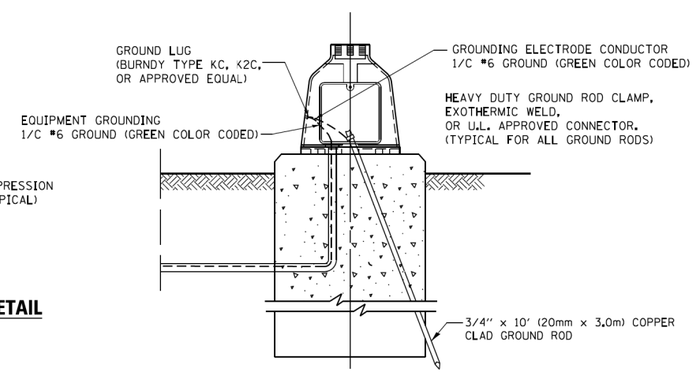


## MAST ARM POLE / POST–GROUNDING DETAIL

(NOT TO SCALE)

| | | | | | | | | | | | |
|---|---|---|---|---|---|---|---|---|---|---|---|
| FILE NAME = c:\pw_work\pwidot\footemj\d0108315\ts05.dgn | USER NAME = footemj | DESIGNED - GR | REVISED - DAG 1-1-14 | STATE OF ILLINOIS DEPARTMENT OF TRANSPORTATION | DISTRICT ONE STANDARD TRAFFIC SIGNAL DESIGN DETAILS | F.A.U. RTE. | SECTION | COUNTY | TOTAL SHEETS | SHEET NO. |
| | | DRAWN - GR | REVISED - | | | 1509 | 06-00133-00-BR | DuPAGE | 426 | 110 |
| | PLOT SCALE = 50.0000 ' / in. | CHECKED - BVW | REVISED - | | | TS-05 | | CONTRACT NO. | | |
| | PLOT DATE = 1/13/2014 | DATE - 1/25/2025 | REVISED - | | SCALE: NONE SHEET 5 OF 32 SHEETS STA. TO STA. | FED. ROAD DIST. NO. 1 | ILLINOIS | FED. AID PROJECT | | |

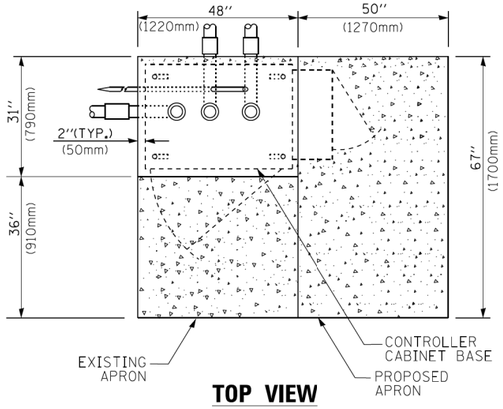


**TOP VIEW**

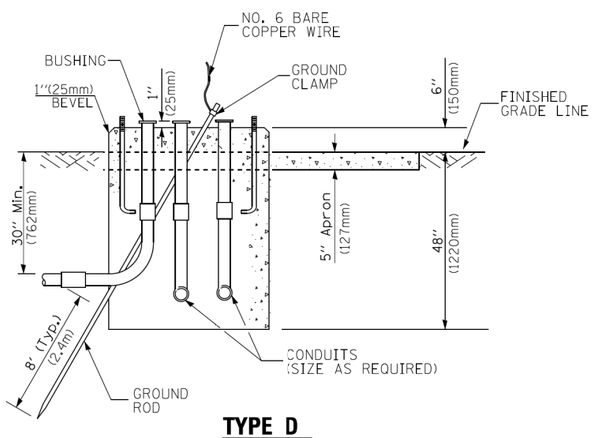


**TYPE D**
**FOR GROUND MOUNTED**
**CONTROLLER CABINET**
**AND UPS BATTERY CABINET**

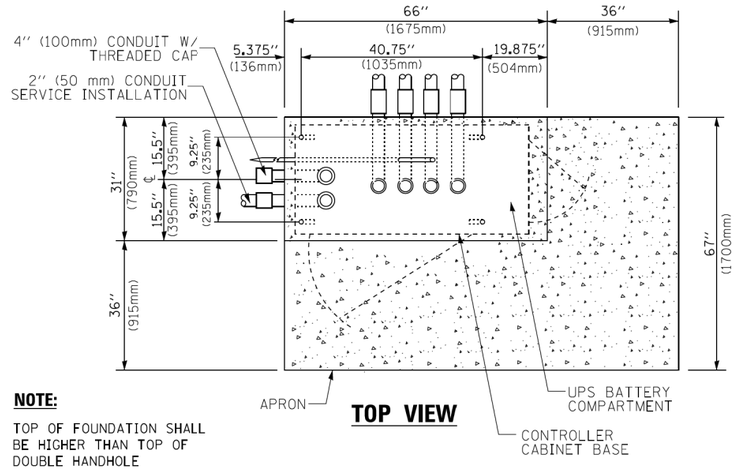


**NOTE:**

TOP OF FOUNDATION SHALL BE HIGHER THAN TOP OF DOUBLE HANDHOLE

**TOP VIEW**

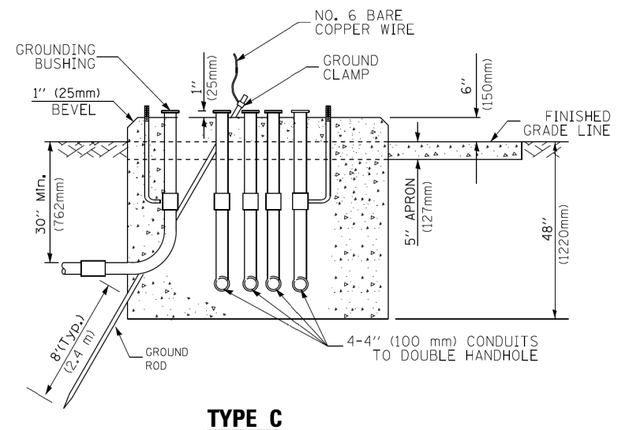


**TYPE C**
**FOR GROUND MOUNTED**
**SUPER P (TYPE IV) AND SUPER R (TYPE V)**
**CONTROLLER CABINETS**

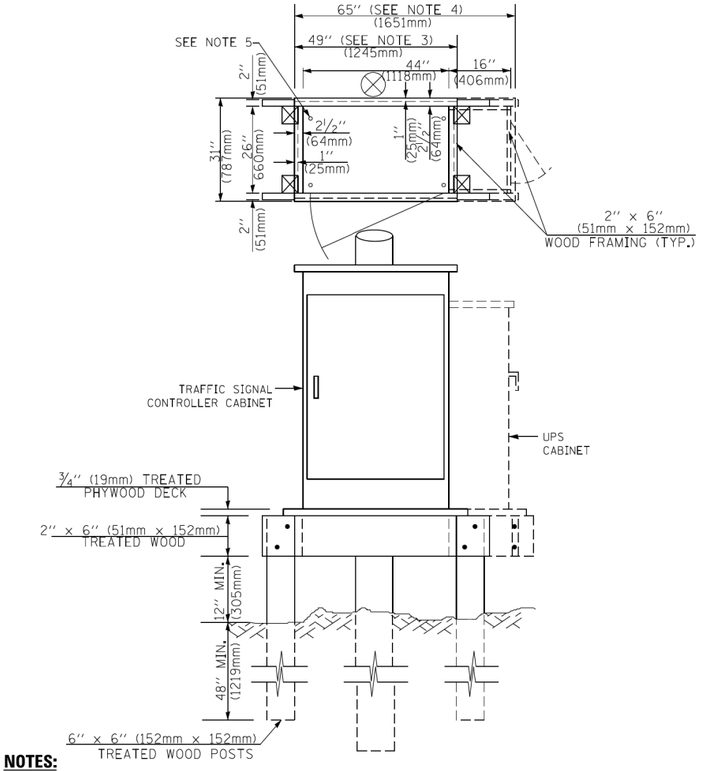


**NOTES:**

1. BASED ON CONTROLLER CABINET TYPE IV WITH BASE DIMENSIONS OF 26" x 44" (660mm x 1118mm). ADJUST PLATFORM SIZE TO FIT CABINET BASE DIMENSIONS BEING SUPPLIED
2. BASED ON UNINTERRUPTIBLE POWER SUPPLY CABINET WITH BASE DIMENSIONS OF 16" x 25" (406mm x 635mm). ADJUST PLATFORM SIZE TO FIT CABINET BASE DIMENSIONS BEING SUPPLIED.
3. PLATFORM SIZE FOR CONTROLLER CABINET TYPE IV.
4. PLATFORM SIZE FOR CONTROLLER CABINET TYPE IV AND UNINTERRUPTIBLE POWER SUPPLY CABINET.
5. DRILLED HOLES THROUGH THE PLATFORM BASE TO MATCH THE CONTROLLER CABINET BOLT TEMPLATE. FASTEN THE CONTROLLER CABINET TO THE PLATFORM WITH CARRIAGE BOLTS, WASHERS AND NUTS.
6. FASTEN ALL SUPPORT WOOD FRAMING TO THE WOOD POSTS WITH 2 LAG SCREWS FOR EACH CONNECTION..

**TEMPORARY SIGNAL CONTROLLER**
**WOOD SUPPORT PLATFORM**

| CABLE SLACK LENGTH | FEET | METER |
|---|---|---|
| HANDHOLE | 6.5 | 2.0 |
| DOUBLE HANDHOLE | 13.0 | 4.0 |
| SIGNAL POST | 2.0 | 0.6 |
| MAST ARM | 2.0 | 0.6 |
| CONTROLLER CABINET | 1.5 | 0.5 |
| FIBER OPTIC AT CABINET | 13.0 | 4.0 |
| ELECTRIC SERVICE AT (CABINET OR SERVICE LOCATION) | 1.5 | 0.5 |
| GROUND CABLE (SIGNAL POST, MAST ARM, CABINET) | 1.5 | 0.5 |
| GROUND CABLE (BETWEEN FRAME AND COVER) | 5.0 | 1.6 |

**CABLE SLACK**

| VERTICAL CABLE LENGTH | FEET | METER |
|---|---|---|
| MAST ARM POLE ( MAST ARM MOUNTED SIGNAL HEAD) (L = MAST ARM LENGTH - DISTANCE TO SIGNAL HEAD FROM END OF ARM) | 20.0+L | 6.0+L |
| BRACKET MOUNTED (MAST ARM POLE OR SIGNAL POLE) | 13.0 | 4.0 |
| PEDESTRIAN PUSH BUTTON | 6.0 | 2.0 |
| SERVICE INSTALLATION POLE MOUNT TO SERVICE DROP | 13.5 | 4.1 |
| SERVICE INSTALLATION POLE MOUNT TO GROUND | 13.5 | 4.1 |
| SERVICE INSTALLATION GROUND MOUNT | 6.0 | 2.0 |
| FOUNDATION (SIGNAL POST, MAST ARM POLE, CONTROLLER CABINET, SERVICE-GROUND MOUNT) | 3.0 | 1.0 |

**VERTICAL CABLE LENGTH**

| FOUNDATION | DEPTH |
|---|---|
| TYPE A - Signal Post | 4'-0" (1.2m) |
| TYPE C - CONTROLLER W/ UPS | 4'-0" (1.2m) |
| TYPE D - CONTROLLER | 4'-0" (1.2m) |
| SERVICE INSTALLATION, GROUND MOUNT, TYPE A - SQUARE | 4'-0" (1.2m) |

**DEPTH OF FOUNDATION**

| Mast Arm Length | ① Foundation Depth | Foundation Diameter | Spiral Diameter | Quantity of Rebars | Size of Rebars |
|---|---|---|---|---|---|
| Less than 30' (9.1 m) | 10'-0" (3.0 m) | 30" (750mm) | 24" (600mm) | 8 | 6(19) |
| Greater than or equal to 30' (9.1 m) and less than 40' (12.2 m) | 13'-6" (4.1 m) | 30" (750mm) | 24" (600mm) | 8 | 6(19) |
| | 11'-0" (3.4 m) | 36" (900mm) | 30" (750mm) | 12 | 7(22) |
| Greater than or equal to 40' (12.2 m) and less than 50' (15.2 m) | 13'-0" (4.0 m) | 36" (900mm) | 30" (750mm) | 12 | 7(22) |
| Greater than or equal to 50' (15.2 m) and up to 55' (16.8 m) | 15'-0" (4.6 m) | 36" (900mm) | 30" (750mm) | 12 | 7(22) |
| Greater than or equal to 56' (16.8 m) and less than 65' (19.8 m) | 21'-0" (6.4 m) | 42" (1060mm) | 36" (900mm) | 16 | 8(25) |
| Greater than or equal to 65' (19.8 m) and up to 75' (22.9 m) | 25'-0" (7.6 m) | 42" (1060mm) | 36" (900mm) | 16 | 8(25) |

**NOTES:**

1. These foundation depths are for sites which have cohesive soils (clayey silt, sandy clay, etc.) along the length of the shaft, with an average Unconfined Compressive Strength (Qu) > 1.0 tsf (100 kpa). This strength shall be verified by boring data prior to construction or with testing by the Engineer during foundation drilling. The Bureau of Bridges & structures should be contacted for a revised design if other conditions are encountered.
2. Combination mast arm assemblies under 55 feet (16.8 m) shall use 36" (900 mm) diameter foundations.
3. Combination mast arm assemblies under 56 feet (16.8 m) through 75 feet (22.9 m) shall use 42" (1060 mm) diameter foundations
4. For mast arm assemblies with dual arms refer to state standard 878001..

**DEPTH OF MAST ARM FOUNDATIONS, TYPE E**

| | | | | |
|---|---|---|---|---|
| FILE NAME = c:\pw_work\pwidot\footemj\d0108315\ts05.dgn | USER NAME = footemj | DESIGNED - GR | REVISED - DAG 1-1-14 | STATE OF ILLINOIS DEPARTMENT OF TRANSPORTATION |
| | | DRAWN - GR | REVISED - | |
| | PLOT SCALE = 50.0000 ' / in. | CHECKED - BVW | REVISED - | |
| | PLOT DATE = 1/13/2014 | DATE - 1/25/2025 | REVISED - | |

DISTRICT ONE
STANDARD TRAFFIC SIGNAL DESIGN DETAILS

| F.A.U. RTE. | SECTION | COUNTY | TOTAL SHEETS | SHEET NO. |
|---|---|---|---|---|
| 1509 | 06-00133-00-BR | DuPAGE | 426 | 111 |
| | TS-05 | CONTRACT NO. | | |

SCALE: NONE | SHEET 6 OF 32 SHEETS | STA. TO STA. | FED. ROAD DIST. NO. 1 | ILLINOIS | FED. AID PROJECT

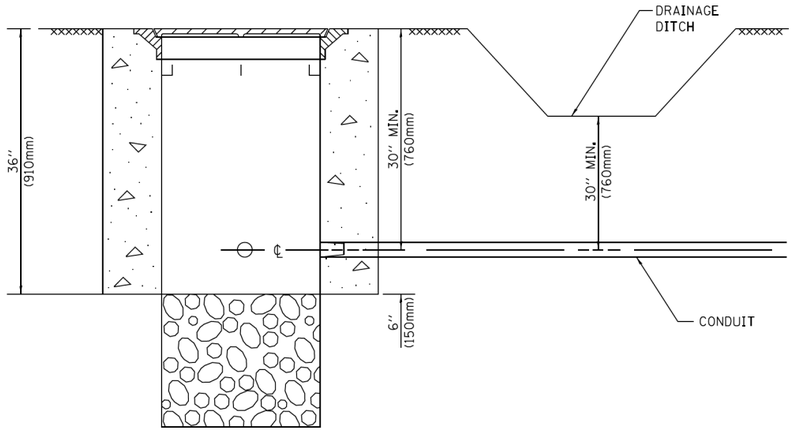


**NOTES:**

1. CONDUIT DEPTH SHALL BE A MINIMUM OF 30" (760mm) BELOW THE BOTTOM OF THE DRAINAGE DITCH OR ANY SLOPING GROUND
2. THE MINIMUM CONDUIT DEPTH APPLIES TO ALL CONDUIT PLACED UNDER ROADWAY PAVEMENT, MULTI-USE PATHS, SIDEWALKS AND SOIL SURFACES.
3. THE MINIMUM CONDUIT DEPTH APPLIES TO ALL HANDHOLES, HEAVY DUTY HANDHOLES AND DOUBLE HANDHOLES.

## HANDHOLE WITH MINIMUM CONDUIT DEPTH

(NOT TO SCALE)

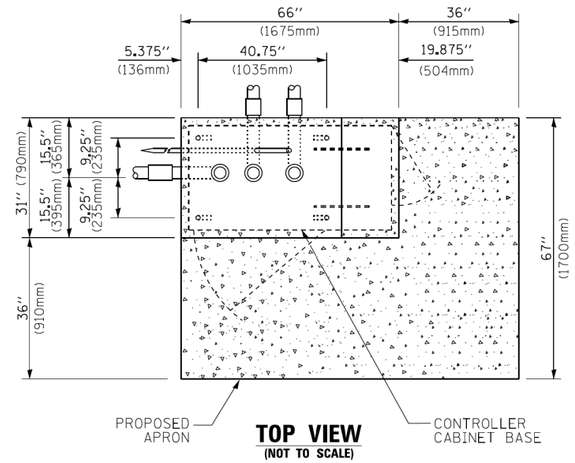


## TOP VIEW

(NOT TO SCALE)

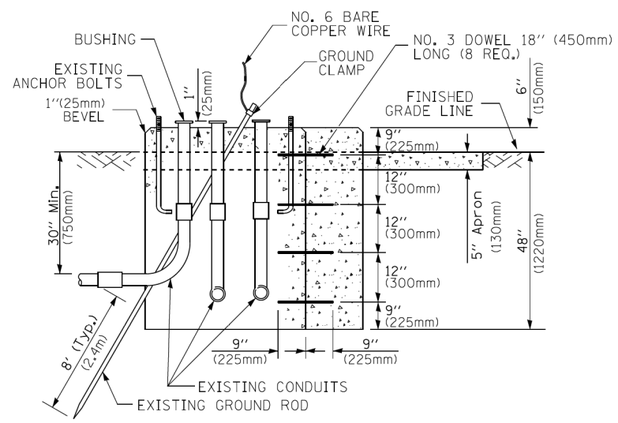


## MODIFY EXISTING TYPE "D" FOUNDATION TO TYPE "C" FOUNDATION

(NOT TO SCALE)

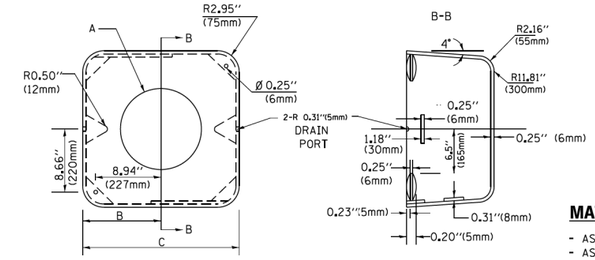


**MATERIAL:**

- ASTM A36 STEEL
- ASTM A-123 HOT DIPPED GALVANIZED

| A | B | C | HEIGHT | WEIGHT |
|---|---|---|---|---|
| VARIES | 9.5"(241mm) | 19"(483mm) | 7" (178mm) - 12" (300mm) | 53 lbs (24kg) |
| VARIES | 10.75"(273mm) | 21.5"(546mm) | 7" (178mm) - 12" (300mm) | 68 lbs (31 kg) |
| VARIES | 13.0"(330mm) | 26"(660mm) | 7" (178mm) - 12" (300mm) | 81 lbs (37 kg) |
| VARIES | 18.5"(470mm) | 37"(940mm) | 7" (178mm) - 12" (300mm) | 126 lbs (57 kg) |

## SHROUD

**NOTES:**

1. DIMENSION "A" IS EQUAL TO THE DIAMETER OF THE MAST ARM POLE AT THE TOP OF THE SHROUD. THE SHROUD SHALL BE TIGHT TO THE MAST ARM POLE.
2. THE SUPPLIER SHALL VERIFIED THE ABOVE DIMENSIONS BASED ON MAST ARM REQUIREMENTS.
3. THE HEIGHT OF THE SHROUD SHALL COVER THE ANCHOR BOLTS, NUTS AND MAST ARM POLE BASE.

**NOTE:**

SUPPORT EXISTING CABINET AND CONTROL EQUIPMENT ABOVE FOUNDATION TO KEEP TRAFFIC SIGNAL FUNCTIONING WHILE FOUNDATION MODIFICATION WORK IS PROCEEDING.

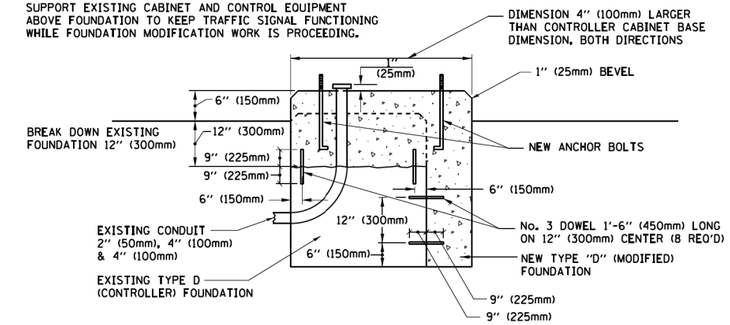


## MODIFY EXISTING TYPE "D" FOUNDATION

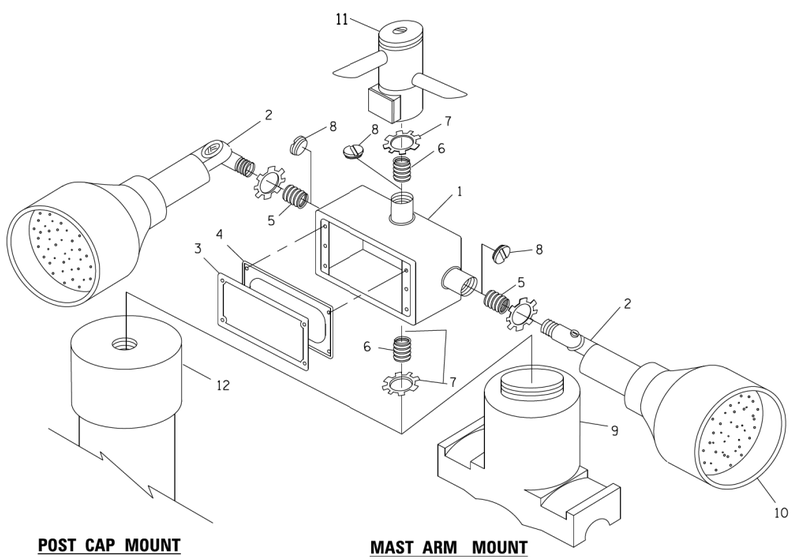


POST CAP MOUNT

MAST ARM MOUNT

## EMERGENCY VEHICLE DETECTOR WITH CONFIRMATION BEACON MOUNTING DETAIL

| ITEM NO. | IDENTIFICATION |
|---|---|
| 1 | OUTLET BOX- GALV. 21 CU.IN. (0.000344 CU-M) |
| 2 | LAMP HOLDER AND COVER |
| 3 | OUTLET BOX COVER |
| 4 | RUBBER COVER GASKET |
| 5 | REDUCING BUSHING |
| 6 | 3/4"(19 mm) CLOSE NIPPLE |
| 7 | 3/4"(19 mm) LOCKNUT |
| 8 | 3/4"(19 mm) HOLE PLUG |
| 9 | SADDLE BRACKET - GALV. |
| 10 | 6 WATT PAR 38 LED FLOOD LAMP |
| 11 | DETECTOR UNIT |
| 12 | POST CAP [18 FT. (5.4 m) POST MIN.] |

**NOTES:**

1. ALL ELECTRICAL ITEMS, EXCEPT ITEMS #2 AND #11 SHALL BE ALUMINUM OR GALVANIZED
2. ITEM #1- OZ/GEDNEY FSX-1-50 OR EQUIVALENT
   ITEM #2- MULBERRY CON-O-SHADE LAMP SHIELD OR EQUIVALENT
   ITEM #9- "BAND-IT" SADDLE BRACKET OR EQUIVALENT
3. WHEN POST MOUNTING IS SPECIFIED, ITEM #9 SHALL NOT BE REQUIRED. THE DETECTION UNIT SHALL BE MOUNTED DIRECTLY ON TOP OF THE CAP BY DRILLING AND TAPPING A 3/4 "(19 mm) HOLE WITH PIPE THREADS. THE POST CAP SHALL EITHER BE SCREWED TO THE TOP OF THE POST OR A MINIMUM OF 3 TIGHTENING SCREWS SHALL BE REQUIRED ON EACH CAP.

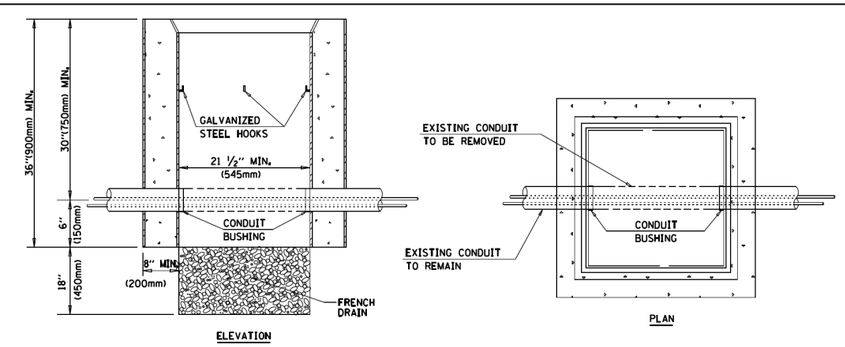


**NOTES:**

1. HANDHOLE CONSTRUCTED PER STATE STANDARD 814001.
2. REMOVAL OF THE EXISTING CONDUIT FROM THE HANDHOLE AND THE INSTALLATION OF THE CONDUIT BUSHINGS SHALL BE INCLUDED WITH THE COST OF THE HANDHOLE.

## HANDHOLE TO INTERCEPT EXISTING CONDUIT

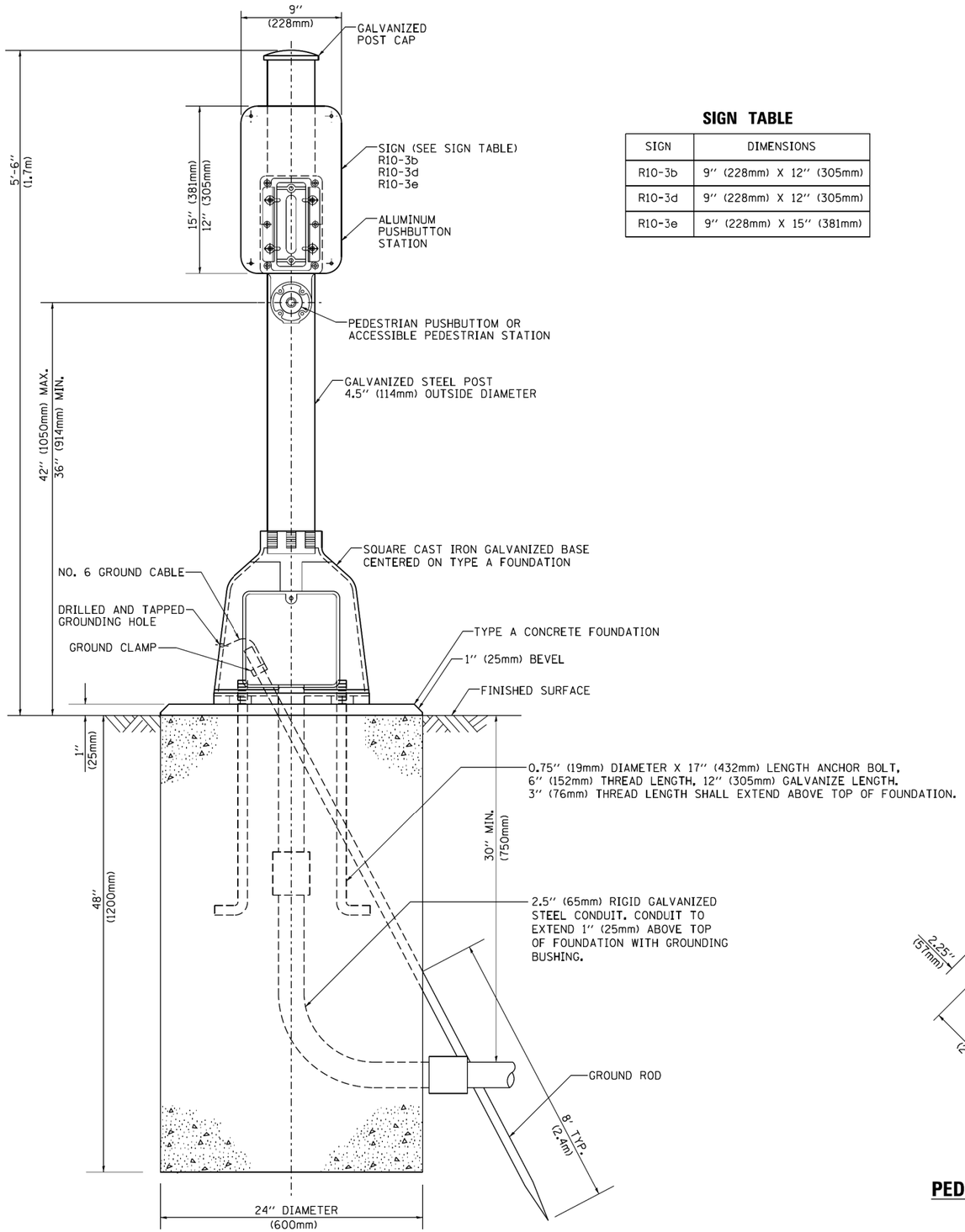


## SIGN TABLE

| SIGN | DIMENSIONS |
|---|---|
| R10-3b | 9'' (228mm) X 12'' (305mm) |
| R10-3d | 9'' (228mm) X 12'' (305mm) |
| R10-3e | 9'' (228mm) X 15'' (381mm) |

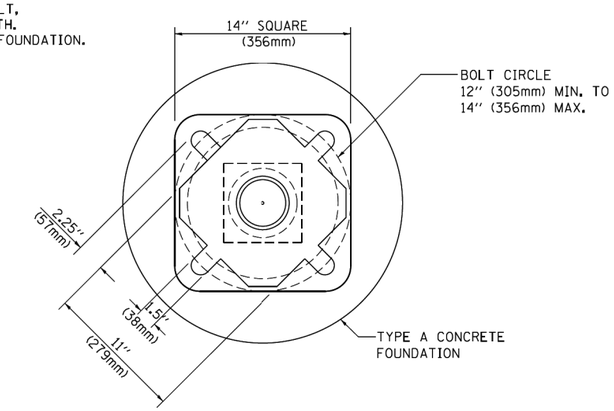


**BOLT PATTERN**

# PEDESTRIAN PUSH BUTTON POST, TYPE A

| | | | | | |
|---|---|---|---|---|---|
| FILE NAME = c:\pw_work\pwidot\footemj\d0108315\ts05.dgn | USER NAME = footemj | DESIGNED - GR | REVISED - DAG 1-1-14 | STATE OF ILLINOIS DEPARTMENT OF TRANSPORTATION | DISTRICT ONE STANDARD TRAFFIC SIGNAL DESIGN DETAILS |
| | PLOT SCALE = 50.0000 ' / in. | DRAWN - GR | REVISED - | | SCALE: NONE · SHEET 8 OF 32 SHEETS · STA. TO STA. |
| | PLOT DATE = 1/13/2014 | CHECKED - BVW | REVISED - | | |
| | | DATE - 1/25/2025 | REVISED - | | |

| F.A.U. RTE. | SECTION | COUNTY | TOTAL SHEETS | SHEET NO. |
|---|---|---|---|---|
| 1509 | 06-00133-00-BR | DuPAGE | 426 | 113 |
| | TS-05 | CONTRACT NO. | | |
| FED. ROAD DIST. NO. 1 | ILLINOIS | FED. AID PROJECT | | |

## NOTES:

1. EXISTING TRAFFIC SIGNAL INSTALLATION AT THIS LOCATION SHALL BE DE-ENERGIZED AND DE-ACTIVATED FOR THE DURATION OF CONTRACT. EXISTING SIGNAL HEADS AND PUSH-BUTTONS SHALL BE DE-ENERGIZED AND COVERED. THE EXISTING TRAFFIC SIGNAL AND INTERCONNECT INSTALLATION SHALL BE RE-ACTIVATED UPON CONTRACT COMPLETION. PROTECTION AND MAINTENANCE OF EXISTING TRAFFIC SIGNAL EQUIPMENT IS INCLUDED IN THE UNIT COST OF TEMPORARY TRAFFIC SIGNAL INSTALLATION.
2. LUMINAIRE ATTACHED TO TEMPORARY WOOD POLES SHALL BE MOUNTED AT A HEIGHT OF 45 FT ABOVE PAVEMENT.
3. INSTALL WIRELESS INTERCONNECT ANTENNA TO MAST ARM POLE AT NORTHWEST CORNER OF GENESEE DR AND NORTH AURORA RD WITH COAXIAL CABLE TO EXISTING CONTROLLER CABINET. INSTALL AND CONNECT WIRELESS INTERCONNECT CARD IN EXISTING SIGNAL CABINET. THE COST OF THIS WORK IS INCLUDED IN THE UNIT COST FOR MAINTENANCE OF EXISTING TRAFFIC SIGNAL INSTALLATION
4. EXISTING WOOD POLES AND SPAN WIRES LEFT IN-PLACE BY ADJACENT CONTRACT 61G19.
5. THE CONTRACTOR SHALL UNINSTALL AND STORE PERMANENT SIGNAL HEADS THAT ARE IN CONFLICT WITH TEMPORARY SIGNAL HEADS OR AS DIRECTED BY THE ENGINEER. UPON COMPLETION OF THE CONTRACT, THE CONTRACTOR SHALL REINSTALL THE PERMANENT SIGNAL HEADS IN THEIR ORIGINAL LOCATION. THE COST OF THIS WORK IS INCLUDED IN THE UNIT COST FOR TEMPORARY TRAFFIC SIGNAL INSTALLATION AT FRONTENAC RD AND NORTH AURORA RD.

## REMOVAL OF EXISTING TRAFFIC SIGNAL EQUIPMENT

THE FOLLOWING EXISTING TRAFFIC SIGNAL EQUIPMENT SHALL BE REMOVED BY THE CONTRACTOR AND SHALL REMAIN THE PROPERTY OF THE AGENCY LISTED BELOW. THE CONTRACTOR SHALL SAFELY STORE AND ARRANGE FOR PICK UP OF ALL EQUIPMENT TO BE RETURNED TO THE LISTED AGENCY AS PER THE TRAFFIC SIGNAL SPECIFICATIONS.

AGENCY: CITY OF NAPERVILLE

| | | |
|---|---|---|
| 1 | EACH | RADAR VEHICLE DETECTION SYSTEM, FAR BACK |
| 1 | EACH | RADAR VEHICLE DETECTION SYSTEM, STOP BAR |

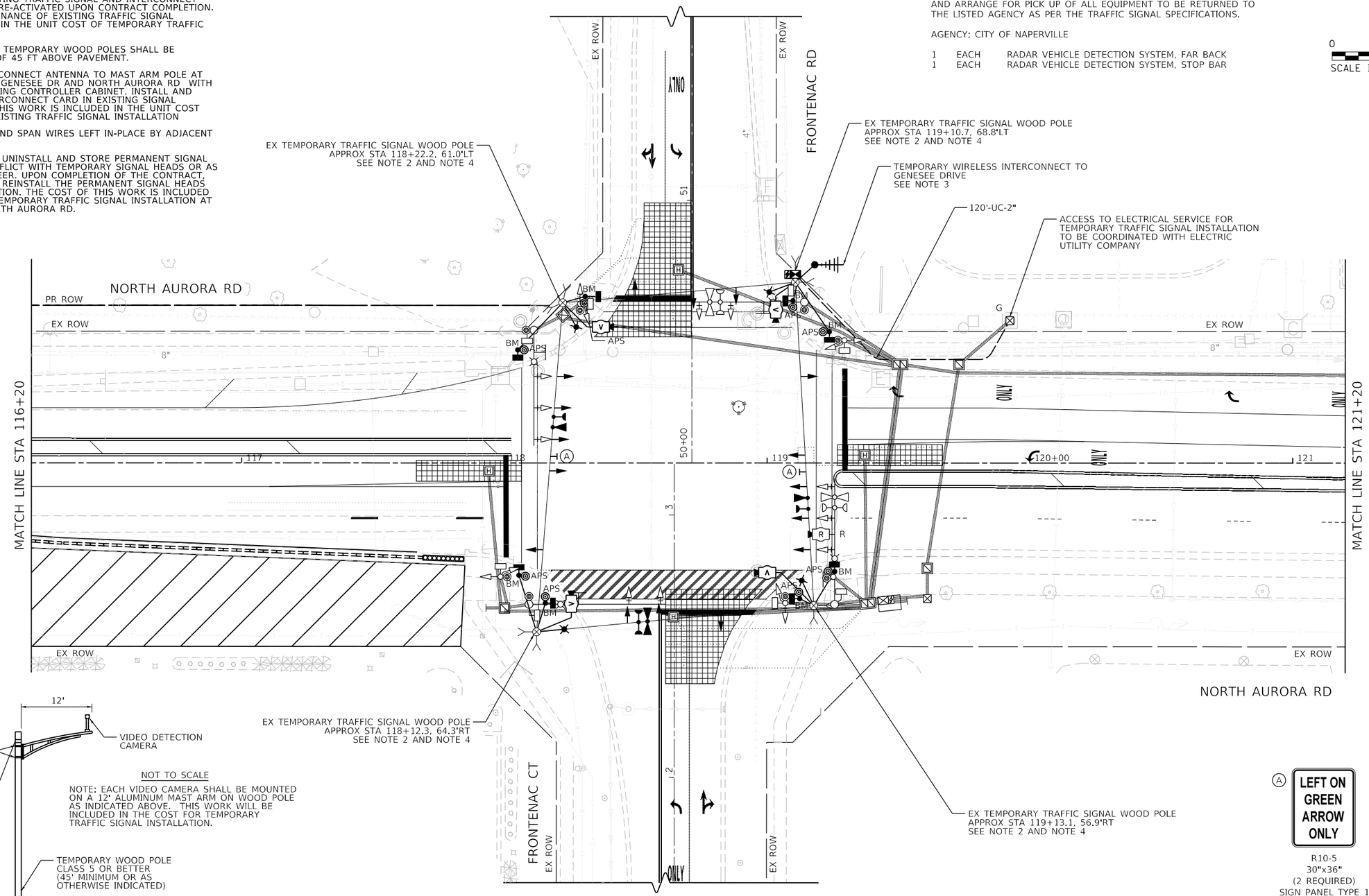


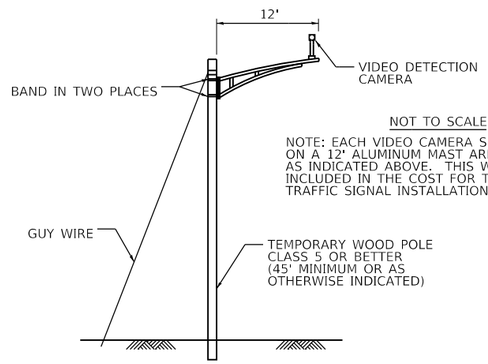


NOT TO SCALE

NOTE: EACH VIDEO CAMERA SHALL BE MOUNTED ON A 12' ALUMINUM MAST ARM ON WOOD POLE AS INDICATED ABOVE. THIS WORK WILL BE INCLUDED IN THE COST FOR TEMPORARY TRAFFIC SIGNAL INSTALLATION.

**TEMPORARY VIDEO DETECTION MOUNTING DETAIL**




R10-5
30"x36"
(2 REQUIRED)
SIGN PANEL TYPE 1
(INCLUDED IN THE COST OF TEMPORARY TRAFFIC SIGNAL INSTALLATION)

| PLAN | BY | DATE |
|---|---|---|
| SURVEYED | | |
| PLOTTED | | |
| ALIGNMENT CHECKED | | |
| RT. OF WAY CHECKED | | |
| CADD FILE NAME | | |
| NOTE BOOK NO. | | |

| PROFILE | BY | DATE |
|---|---|---|
| SURVEYED | | |
| PLOTTED | | |
| GRADES CHECKED | | |
| BM. NOTED | | |
| STRUCTURE NOTATNS CHKD | | |
| NOTE BOOK NO. | | |

FILE NAME = 060092-sht-TS011.dgn

TRANSYSTEMS

| | | | |
|---|---|---|---|
| USER NAME = brvanderwal | DESIGNED - GR | REVISED - | |
| | DRAWN - GR | REVISED - | |
| PLOT SCALE = 40.0000 ' / in. | CHECKED - BVW | REVISED - | |
| PLOT DATE = 1/25/2025 | DATE - 1/25/2025 | REVISED - | |

**STATE OF ILLINOIS**
**DEPARTMENT OF TRANSPORTATION**

**TEMPORARY TRAFFIC SIGNAL INSTALLATION AND EXISTING TRAFFIC SIGNAL EQUIPMENT PLAN NORTH AURORA ROAD AND FRONTENAC ROAD (SHEET 1 OF 2)**

SCALE: 1"=20' | SHEET 9 OF 32 SHEETS | STA. TO STA.

| F.A.U. RTE. | SECTION | COUNTY | TOTAL SHEETS | SHEET NO. |
|---|---|---|---|---|
| 1509 | 06-00133-00-BR | DuPAGE | 426 | 114 |
| | | CONTRACT NO. 61G79 | | |
| | | ILLINOIS FED. AID PROJECT | | |

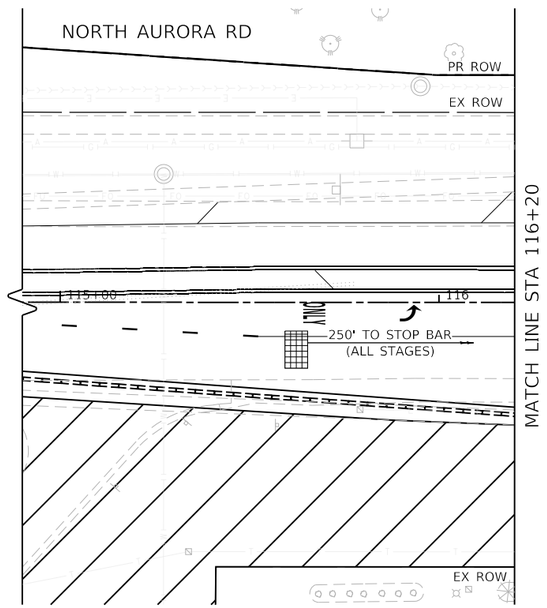


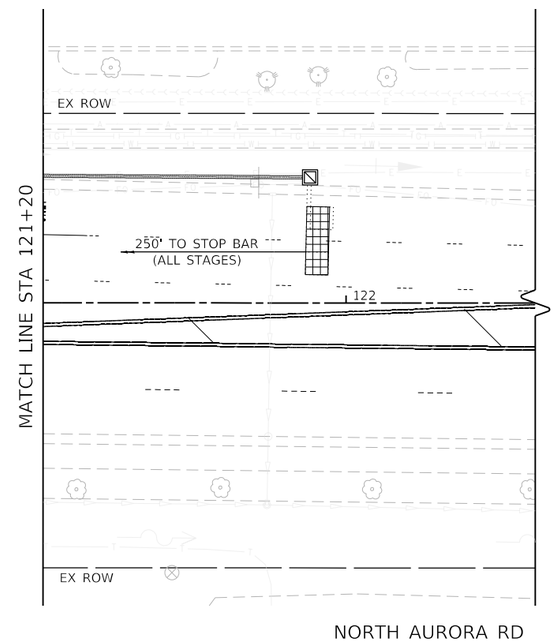


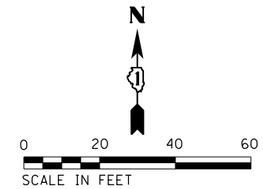


| PLAN | | BY | DATE |
|---|---|---|---|
| NOTE BOOK NO. ____ | SURVEYED ____ PLOTTED ____ ALIGNMENT CHECKED ____ RT. OF WAY CHECKED ____ CADD FILE NAME ____ | | |

| PROFILE | | BY | DATE |
|---|---|---|---|
| NOTE BOOK NO. ____ | SURVEYED ____ PLOTTED ____ GRADES CHECKED ____ B.M. NOTED ____ STRUCTURE NOTAT'NS CHK'D ____ | | |

FILE NAME = 060092-sht-TS0112.dgn

TRANSYSTEMS

| | | | |
|---|---|---|---|
| USER NAME = brvanderwal | DESIGNED - GR | REVISED - | |
| | DRAWN - GR | REVISED - | |
| PLOT SCALE = 40.0000 ' / in. | CHECKED - BVW | REVISED - | |
| PLOT DATE = 1/25/2025 | DATE - 1/25/2025 | REVISED - | |

**STATE OF ILLINOIS**
**DEPARTMENT OF TRANSPORTATION**

**TEMPORARY TRAFFIC SIGNAL INSTALLATION AND EXISTING TRAFFIC SIGNAL EQUIPMENT PLAN**
**NORTH AURORA ROAD AND FRONTENAC ROAD (SHEET 2 OF 2)**

SCALE: 1"=20' | SHEET 10 OF 32 SHEETS | STA. TO STA.

| F.A.U. RTE. | SECTION | COUNTY | TOTAL SHEETS | SHEET NO. |
|---|---|---|---|---|
| 1509 | 06-00133-00-BR | DuPAGE | 426 | 115 |

CONTRACT NO. 61G79

ILLINOIS FED. AID PROJECT

| PLAN | BY | DATE |
|---|---|---|
| SURVEYED | | |
| PLOTTED | | |
| ALIGNMENT CHECKED | | |
| RT. OF WAY CHECKED | | |
| CADD FILE NAME | | |
| NOTE BOOK NO. | | |

| PROFILE | BY | DATE |
|---|---|---|
| SURVEYED | | |
| PLOTTED | | |
| GRADES CHECKED | | |
| B.M. NOTED | | |
| STRUCTURE NOTAT'NS CH'KD | | |
| NOTE BOOK NO. | | |

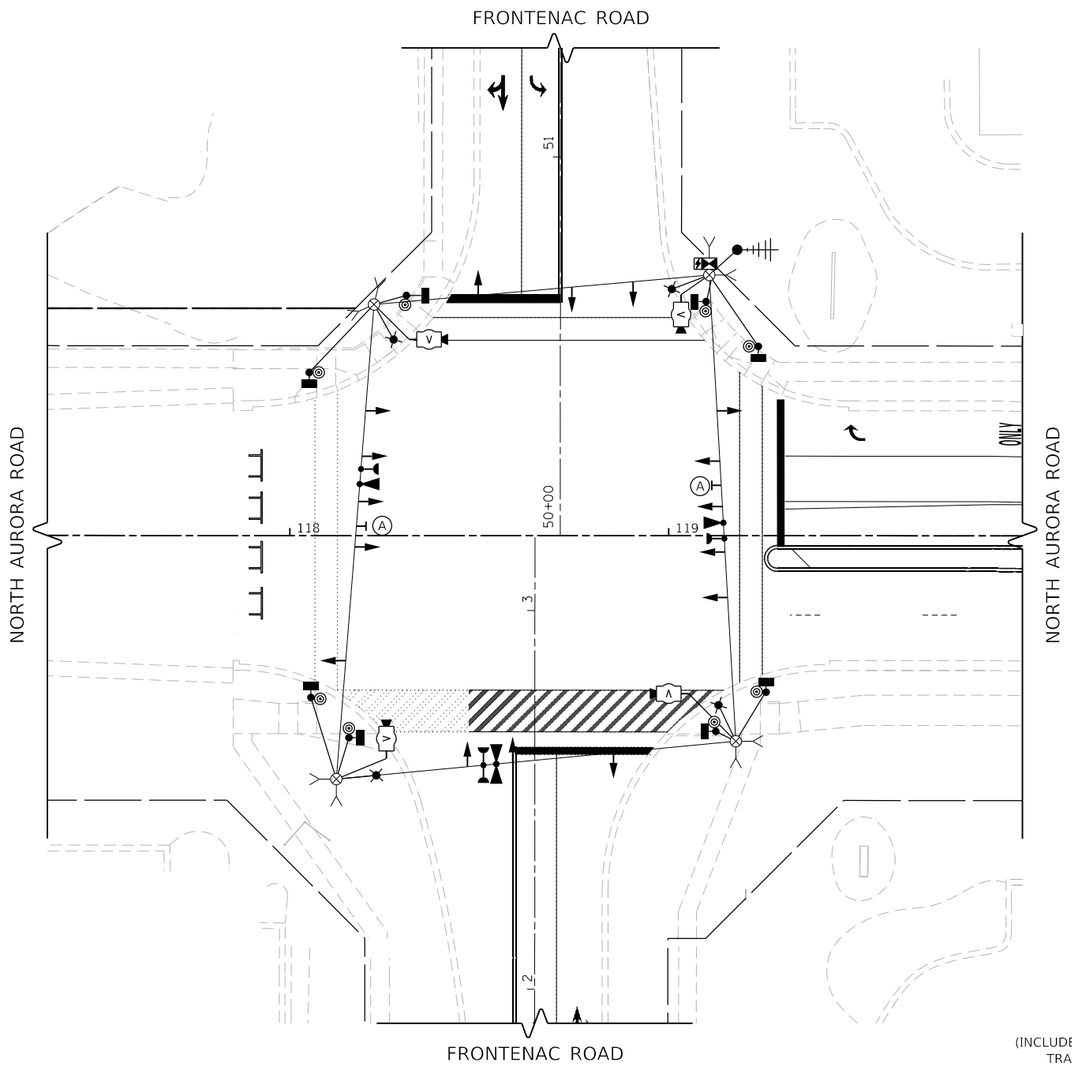


## TEMPORARY TRAFFIC SIGNAL STAGE 1

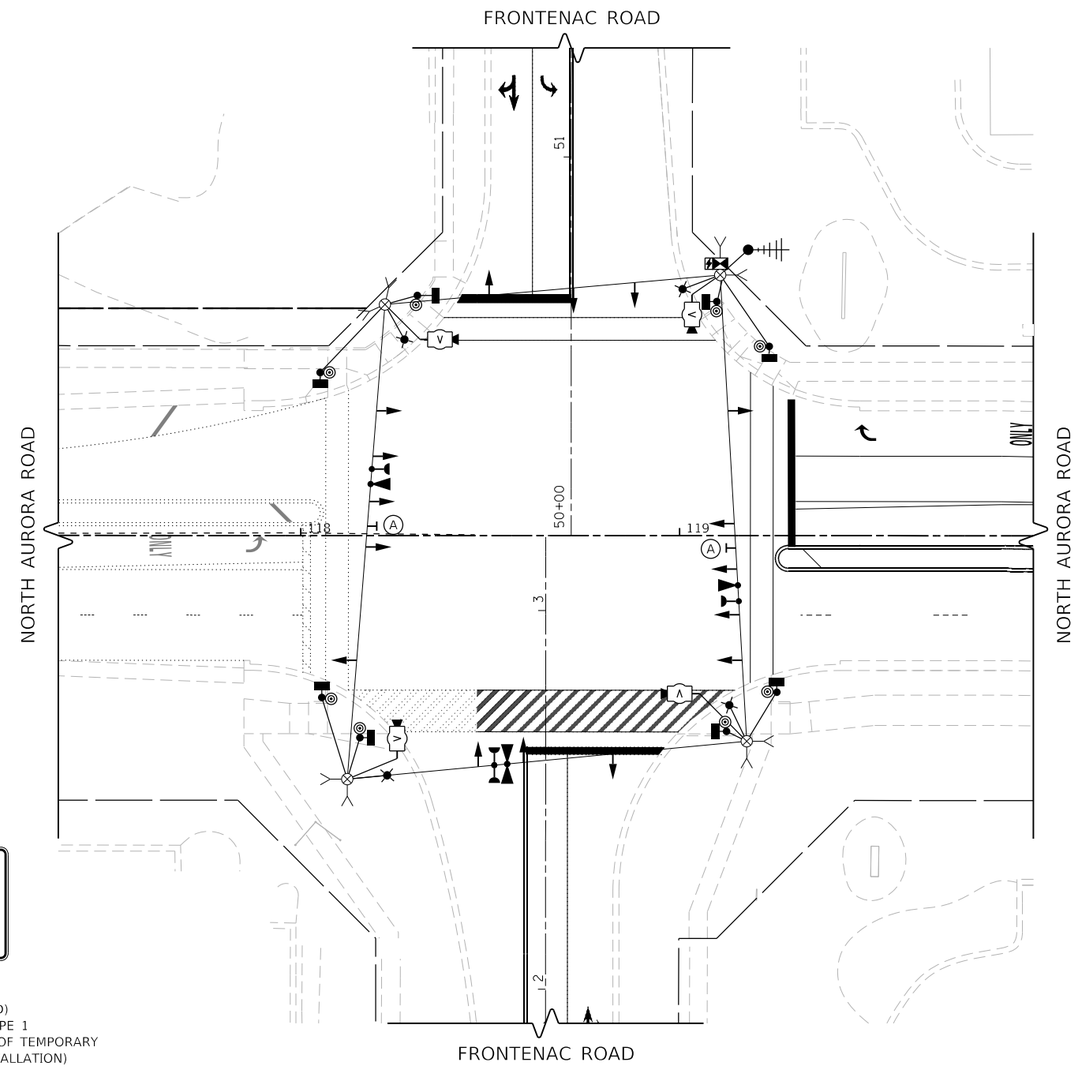


## TEMPORARY TRAFFIC SIGNAL STAGE 2

R10-5
30"x36"
(2 REQUIRED)
SIGN PANEL TYPE 1
(INCLUDED IN THE COST OF TEMPORARY
TRAFFIC SIGNAL INSTALLATION)

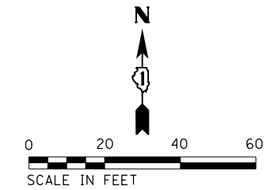


FILE NAME = 0608992-sht-TS0113.dgn

| TRANSYSTEMS | USER NAME = brvanderwal | DESIGNED - GR | REVISED - | STATE OF ILLINOIS DEPARTMENT OF TRANSPORTATION | TEMPORARY TRAFFIC SIGNAL STAGING PLAN NORTH AURORA ROAD AND FRONTENAC ROAD (SHEET 1 OF 4) | F.A.U. RTE. | SECTION | COUNTY | TOTAL SHEETS | SHEET NO. |
|---|---|---|---|---|---|---|---|---|---|---|
| | | DRAWN - GR | REVISED - | | | 1509 | 06-00133-00-BR | DuPAGE | 426 | 116 |
| | PLOT SCALE = 40.0000 ' / in. | CHECKED - BVW | REVISED - | | | | | CONTRACT NO. 61G79 | | |
| | PLOT DATE = 1/25/2025 | DATE - 1/25/2025 | REVISED - | | SCALE: 1"=20' SHEET 11 OF 32 SHEETS STA. TO STA. | | ILLINOIS FED. AID PROJECT | | | |

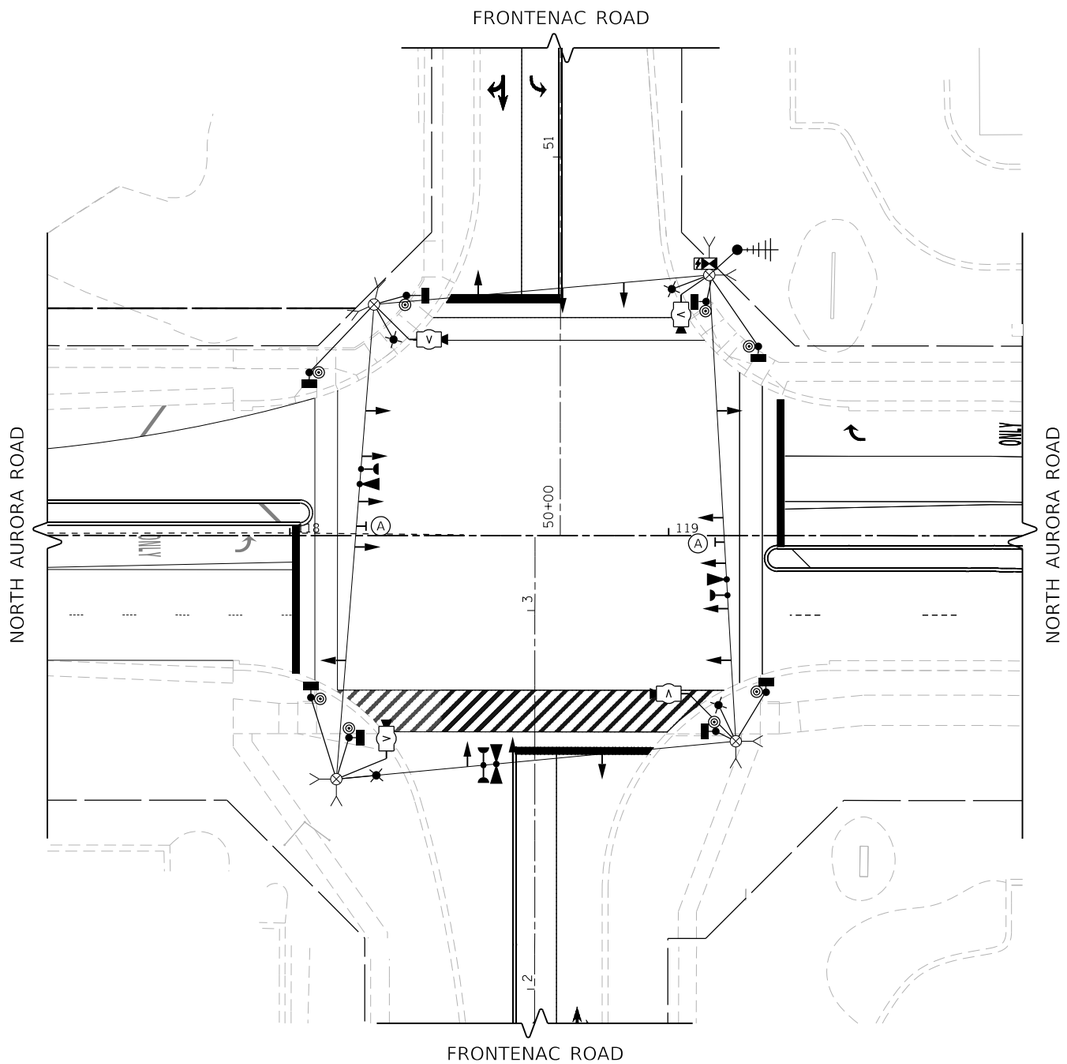


## TEMPORARY TRAFFIC SIGNAL STAGE 3, STAGE 4 & STAGE 5

Ⓐ **LEFT ON GREEN ARROW ONLY**

R10-5
30"x36"
(2 REQUIRED)
SIGN PANEL TYPE 1
(INCLUDED IN THE COST OF TEMPORARY TRAFFIC SIGNAL INSTALLATION)

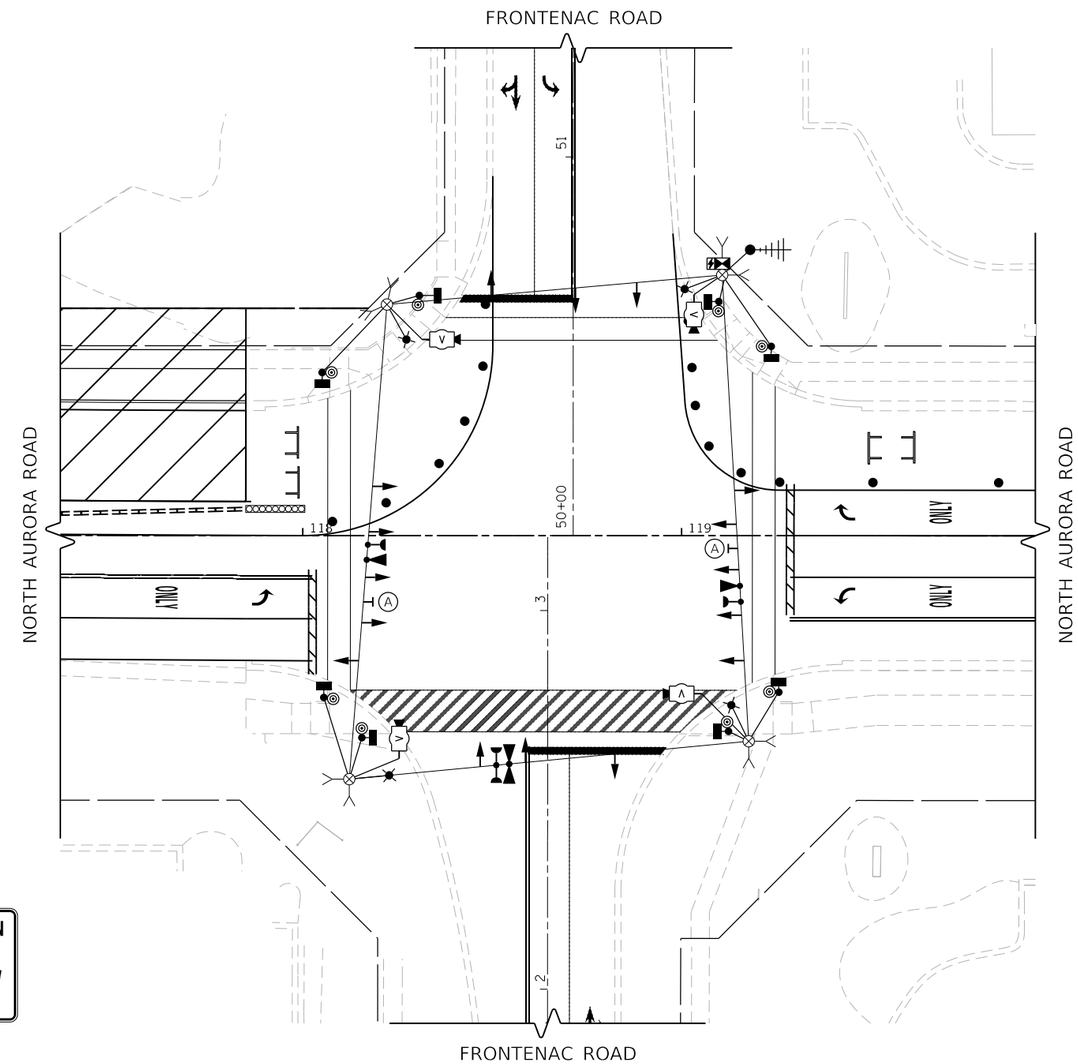


## TEMPORARY TRAFFIC SIGNAL STAGE 6

N

0 20 40 60
SCALE IN FEET

| PLAN | | BY | DATE |
|---|---|---|---|
| NOTE BOOK NO. ____ | SURVEYED | | |
| | PLOTTED | | |
| | ALIGNMENT CHECKED | | |
| | RT. OF WAY CHECKED | | |
| | CADD FILE NAME | | |

| PROFILE | | BY | DATE |
|---|---|---|---|
| NOTE BOOK NO. ____ | SURVEYED | | |
| | PLOTTED | | |
| | GRADES CHECKED | | |
| | BM. NOTED | | |
| | STRUCTURE NOTAT'NS CHK'D | | |

FILE NAME = 060092-sht-TS0114.dgn

TRANSYSTEMS

| | | | |
|---|---|---|---|
| USER NAME = brvanderwal | DESIGNED - GR | REVISED - | |
| | DRAWN - GR | REVISED - | |
| PLOT SCALE = 40.0000 ' / in. | CHECKED - BVW | REVISED - | |
| PLOT DATE = 1/25/2025 | DATE - 1/25/2025 | REVISED - | |

**STATE OF ILLINOIS**
**DEPARTMENT OF TRANSPORTATION**

**TEMPORARY TRAFFIC SIGNAL STAGING PLAN**
**NORTH AURORA ROAD AND FRONTENAC ROAD (SHEET 2 OF 4)**

SCALE: 1"=20' | SHEET 12 OF 32 SHEETS | STA. TO STA.

| F.A.U. RTE. | SECTION | COUNTY | TOTAL SHEETS | SHEET NO. |
|---|---|---|---|---|
| 1509 | 06-00133-00-BR | DuPAGE | 426 | 117 |

CONTRACT NO. 61G79

ILLINOIS FED. AID PROJECT

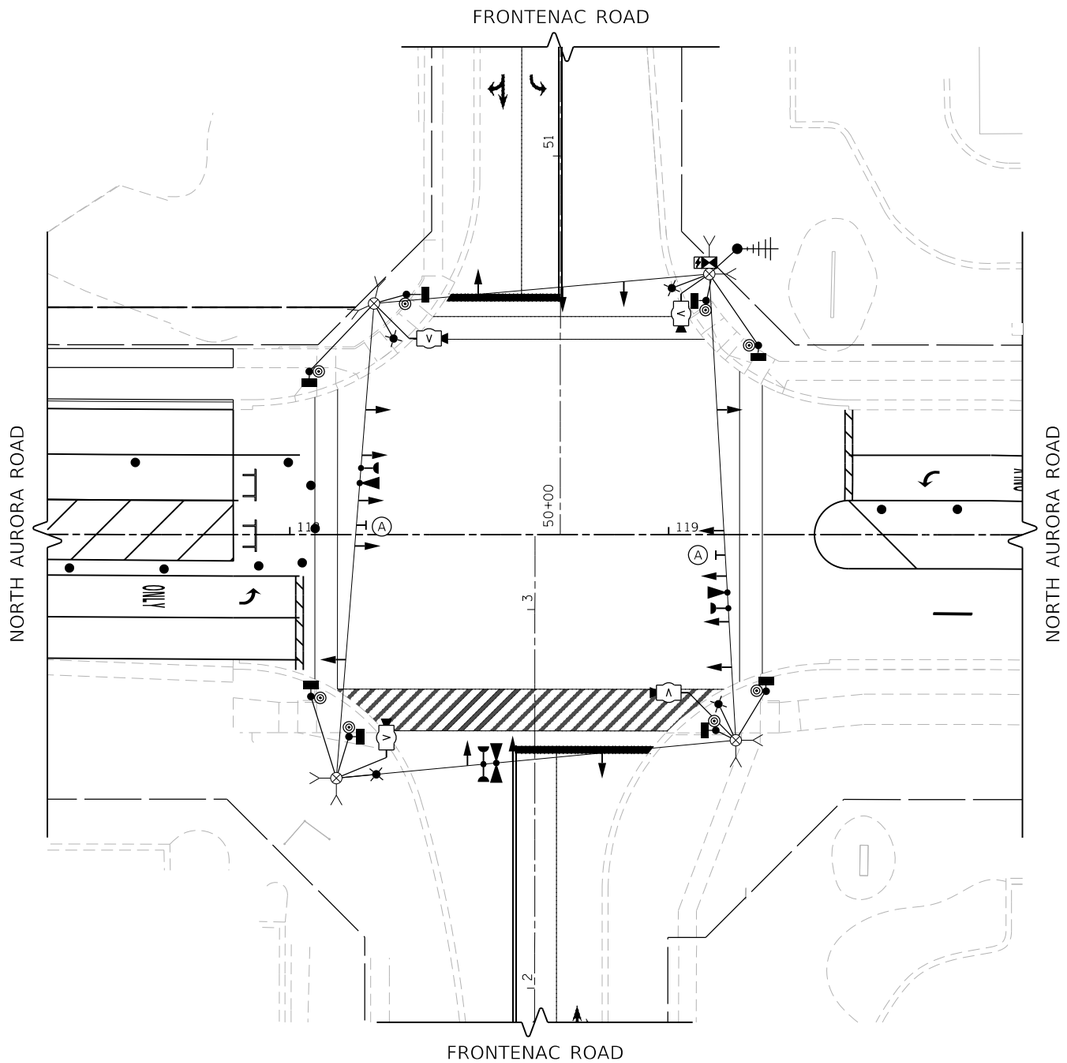


## TEMPORARY TRAFFIC SIGNAL STAGE 7

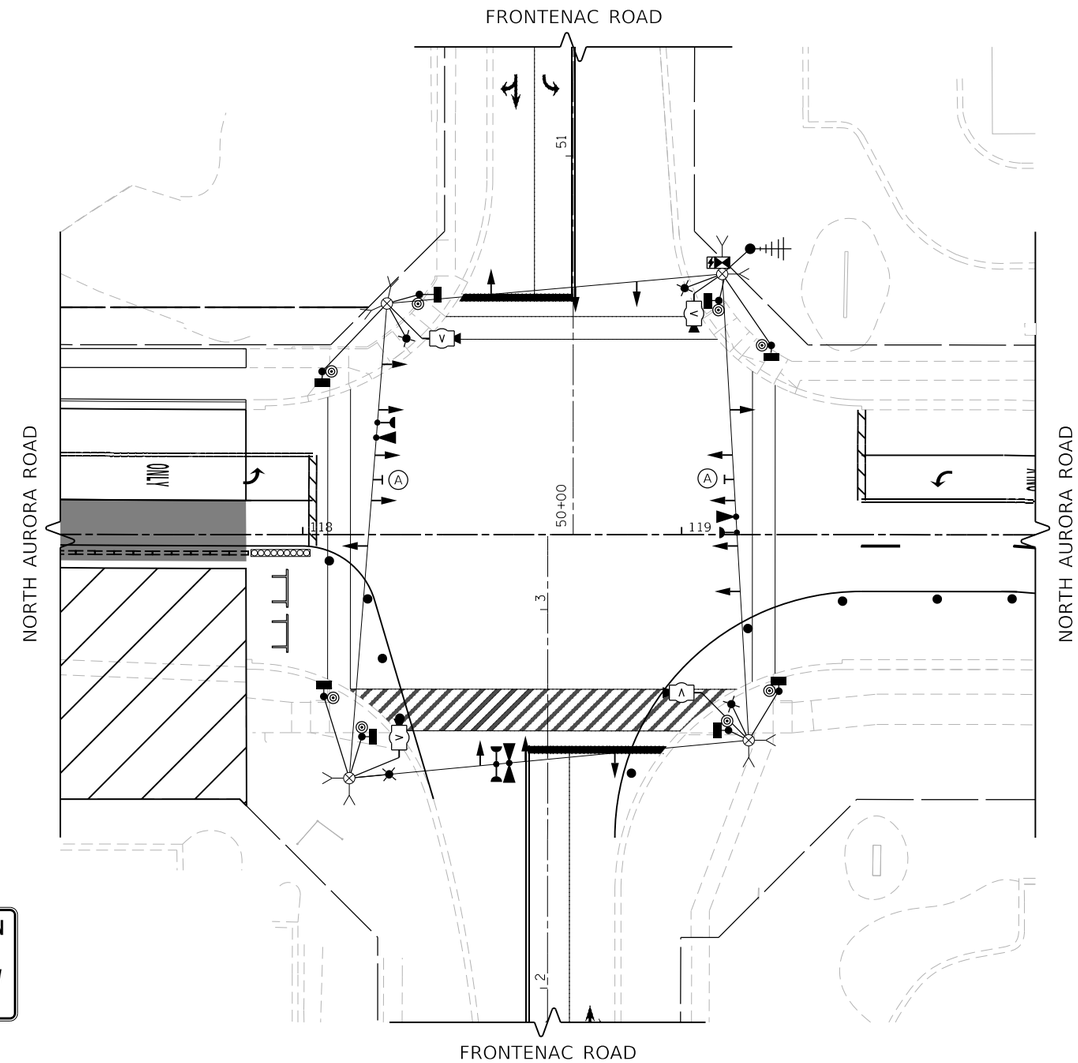


## TEMPORARY TRAFFIC SIGNAL STAGE 8

R10-5
30"x36"
(2 REQUIRED)
SIGN PANEL TYPE 1
(INCLUDED IN THE COST OF TEMPORARY
TRAFFIC SIGNAL INSTALLATION)

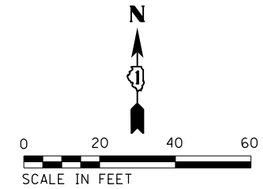


| PLAN | BY | DATE |
|---|---|---|
| SURVEYED | | |
| PLOTTED | | |
| ALIGNMENT CHECKED | | |
| RT. OF WAY CHECKED | | |
| CADD FILE NAME | | |
| NOTE BOOK NO. | | |

| PROFILE | BY | DATE |
|---|---|---|
| SURVEYED | | |
| PLOTTED | | |
| GRADES CHECKED | | |
| B.M. NOTED | | |
| STRUCTURE NOTATNS CHKD | | |
| NOTE BOOK NO. | | |

FILE NAME = 060092-sht-TS0115

TRANSYSTEMS

| | | | |
|---|---|---|---|
| USER NAME = brvanderwal | DESIGNED - GR | REVISED - | |
| | DRAWN - GR | REVISED - | |
| PLOT SCALE = 40.0000 ' / in. | CHECKED - BVW | REVISED - | |
| PLOT DATE = 1/25/2025 | DATE - 1/25/2025 | REVISED - | |

**STATE OF ILLINOIS**
**DEPARTMENT OF TRANSPORTATION**

**TEMPORARY TRAFFIC SIGNAL STAGING PLAN**
**NORTH AURORA ROAD AND FRONTENAC ROAD (SHEET 3 OF 4)**

SCALE: 1"=20' | SHEET 13 OF 32 SHEETS | STA. TO STA.

| F.A.U. RTE. | SECTION | COUNTY | TOTAL SHEETS | SHEET NO. |
|---|---|---|---|---|
| 1509 | 06-00133-00-BR | DuPAGE | 426 | 118 |

CONTRACT NO. 61G79

ILLINOIS FED. AID PROJECT

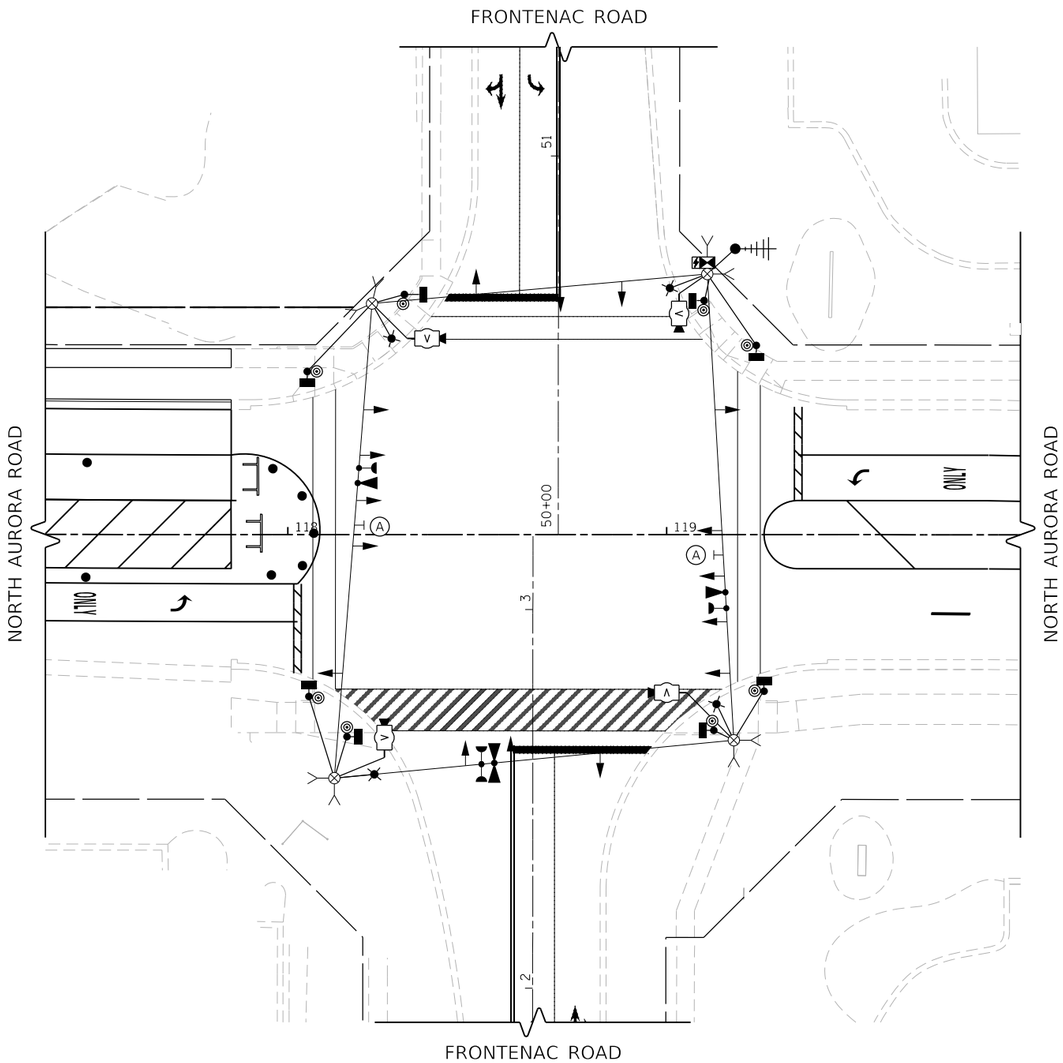


**TEMPORARY TRAFFIC SIGNAL STAGE 9**

R10-5
30"x36"
(2 REQUIRED)
SIGN PANEL TYPE 1
(INCLUDED IN THE COST OF TEMPORARY
TRAFFIC SIGNAL INSTALLATION)

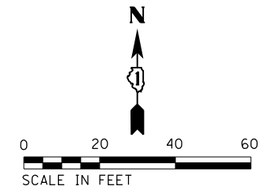


| PLAN | BY | DATE |
|---|---|---|
| SURVEYED | | |
| PLOTTED | | |
| ALIGNMENT CHECKED | | |
| RT. OF WAY CHECKED | | |
| CADD FILE NAME | | |
| NOTE BOOK NO. | | |

| PROFILE | BY | DATE |
|---|---|---|
| SURVEYED | | |
| PLOTTED | | |
| GRADES CHECKED | | |
| BM. NOTED | | |
| STRUCTURE NOTAT'NS CHK'D | | |
| NOTE BOOK NO. | | |

FILE NAME = 060092-sht-TS0116

TRANSYSTEMS

| | | | |
|---|---|---|---|
| USER NAME = brvanderwal | DESIGNED - GR | REVISED - | |
| | DRAWN - GR | REVISED - | |
| PLOT SCALE = 40.0000 ' / in. | CHECKED - BVW | REVISED - | |
| PLOT DATE = 1/25/2025 | DATE - 1/25/2025 | REVISED - | |

**STATE OF ILLINOIS**
**DEPARTMENT OF TRANSPORTATION**

**TEMPORARY TRAFFIC SIGNAL STAGING PLAN**
**NORTH AURORA ROAD AND FRONTENAC ROAD (SHEET 4 OF 4)**

SCALE: 1"=20' | SHEET 14 OF 32 SHEETS | STA. TO STA.

| F.A.U. RTE. | SECTION | COUNTY | TOTAL SHEETS | SHEET NO. |
|---|---|---|---|---|
| 1509 | 06-00133-00-BR | DuPAGE | 426 | 119 |

CONTRACT NO. 61G79

ILLINOIS FED. AID PROJECT

## STAGE 1 TEMPORARY CONTROLLER SEQUENCE

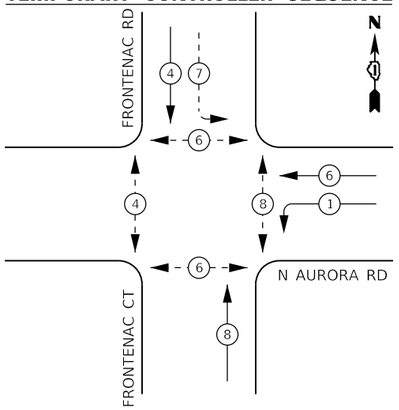


## PRESTAGE AND STAGE 2 TO STAGE 9 TEMPORARY CONTROLLER SEQUENCE

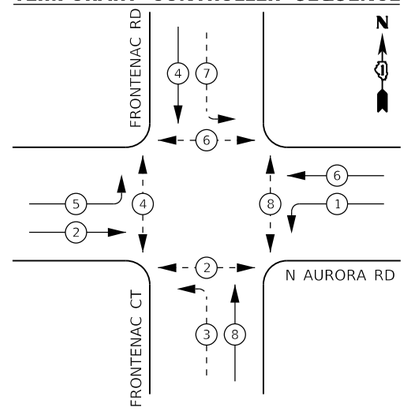


## STAGE 1 TEMPORARY EMERGENCY VEHICLE PREEMPTION SEQUENCE

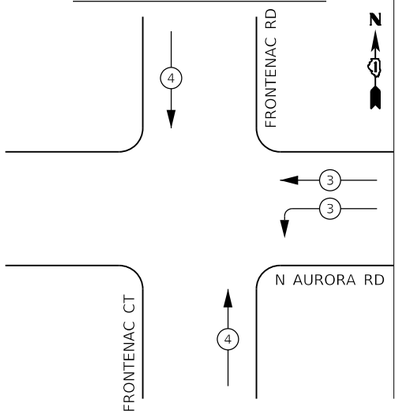


## PRESTAGE AND STAGE 2 TO STAGE 9 TEMPORARY EMERGENCY VEHICLE PREEMPTION SEQUENCE

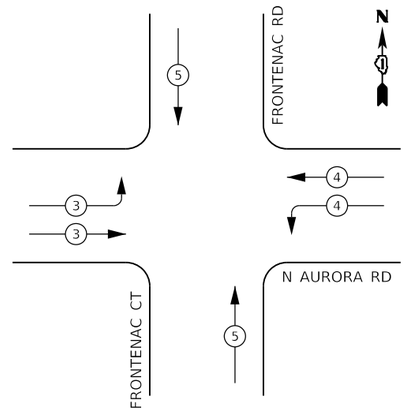


## LEGEND:

- PROTECTED PHASE
- PROTECTED/PERMITTED PHASE
- PEDESTRIAN PHASE
- OL OVERLAP

## TRAFFIC SIGNAL ELECTRICAL SERVICE REQUIREMENTS

| TYPE | NO. OF LAMPS | LED WATTAGE | % OPERATION | TOTAL WATTAGE |
|---|---|---|---|---|
| SIGNAL (RED) | 16 | 11 | 50 | 88.0 |
| (YELLOW) | 16 | 20 | 5 | 16.0 |
| (GREEN) | 16 | 12 | 45 | 86.4 |
| PERMISSIVE ARROW | 8 | 10 | 10 | 8.0 |
| PED. SIGNAL | 8 | 20 | 100 | 160.0 |
| CONTROLLER | 1 | 100 | 100 | 100.0 |
| UPS | 1 | 25 | 100 | 25.0 |
| PTZ VIDEO SYSTEM | 1 | 115 | 100 | 150.0 |
| BLANK-OUT SIGN | 0 | 25 | 5 | |
| FLASHER | 0 | - | 50 | |
| STREET NAME SIGN | 0 | 120 | 50 | |
| LUMINAIRE | 4 | 285 | 50 | 570.0 |
| | | | TOTAL = | 1203.4 |

ENERGY COSTS TO:

CITY OF NAPERVILLE

ENERGY SUPPLY: CONTACT:

PHONE:

COMPANY: NAPERVILLE ELECTRIC DEPT.

ACCOUNT NUMBER:

## NOTES:

1. DE-ENERGIZE AND BAG SIGNAL HEADS FOR EASTBOUND APPROACH AND LEFT ARROW SECTIONS FOR NORTHBOUND LEFT TURN DURING STAGE 1.

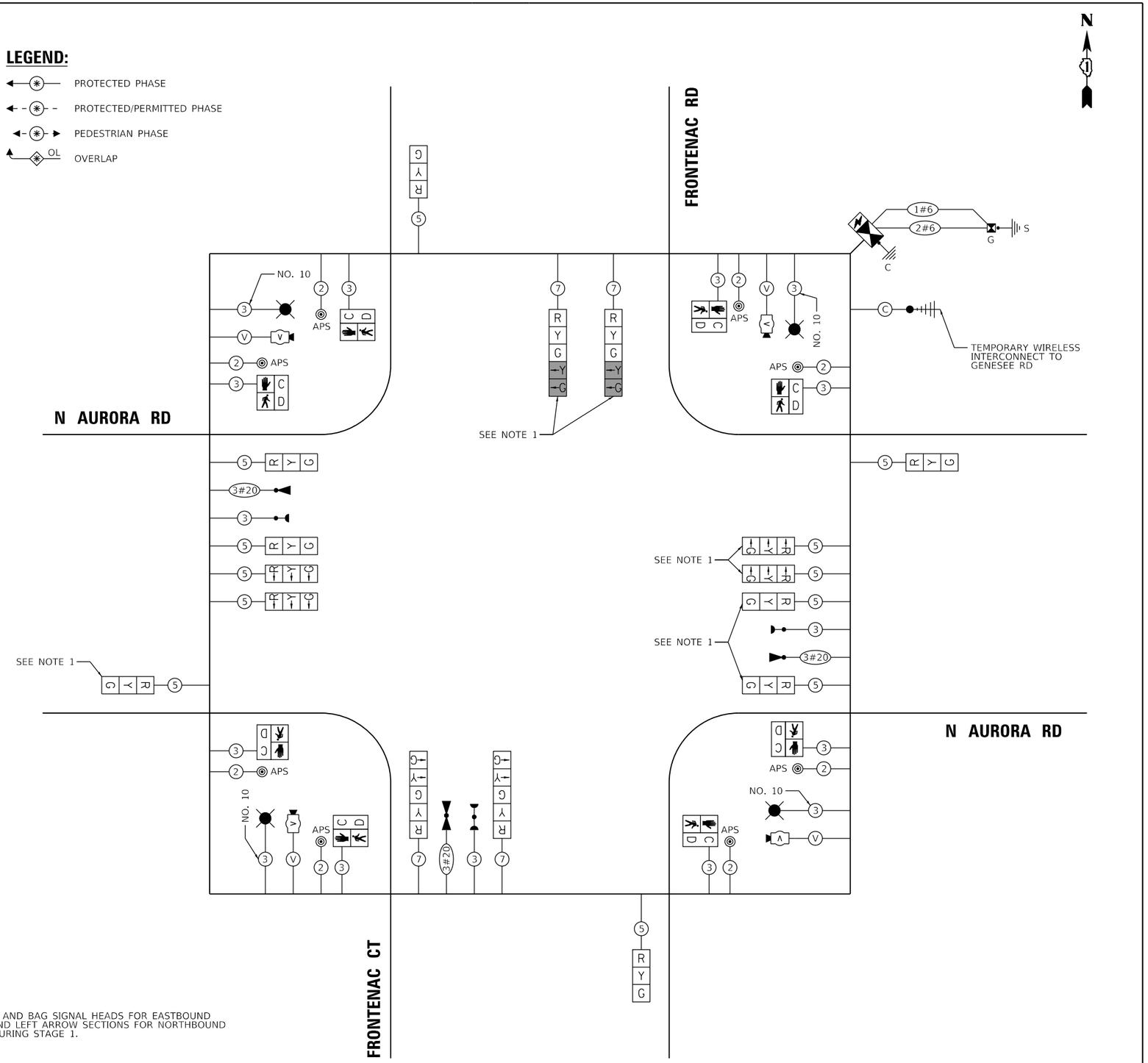


## CABLE PLAN

(NOT TO SCALE)

PLAN — SURVEYED / PLOTTED / ALIGNMENT CHECKED / RT. OF WAY CHECKED / CADD FILE NAME — NOTE BOOK NO. — BY — DATE

PROFILE — SURVEYED / PLOTTED / GRADES CHECKED / B.M. NOTED / STRUCTURE NOTATNS CHKD — NOTE BOOK NO. — BY — DATE

FILE NAME = 060092-sht-TS0121.dgn

TRANSYSTEMS

| | | | |
|---|---|---|---|
| USER NAME = brvanderwal | DESIGNED - GR | REVISED - | |
| | DRAWN - GR | REVISED - | |
| PLOT SCALE = 40.0000 ' / in. | CHECKED - BVW | REVISED - | |
| PLOT DATE = 1/25/2025 | DATE - 1/25/2025 | REVISED - | |

STATE OF ILLINOIS
DEPARTMENT OF TRANSPORTATION

TEMPORARY CABLE PLAN, TEMPORARY PHASE DESIGNATION DIAGRAM, AND TEMPORARY EMERGENCY VEHICLE PREEMPTION SEQUENCE
NORTH AURORA ROAD AND FRONTENAC ROAD

SCALE: 1"=20' | SHEET 15 OF 32 SHEETS | STA. TO STA.

| F.A.U. RTE. | SECTION | COUNTY | TOTAL SHEETS | SHEET NO. |
|---|---|---|---|---|
| 1509 | 06-00133-00-BR | DuPAGE | 426 | 120 |

CONTRACT NO. 61G79

ILLINOIS FED. AID PROJECT

## NOTES:

1. EACH DETECTOR LOOP SHALL HAVE ITS OWN 1" COILABLE NON-METALLIC CONDUIT BETWEEN THE EDGE OF PAVEMENT AND THE ADJACENT HANDHOLE AS SHOWN ON THE PLANS AND AS STATED IN THE TRAFFIC SIGNAL SPECIFICATIONS.

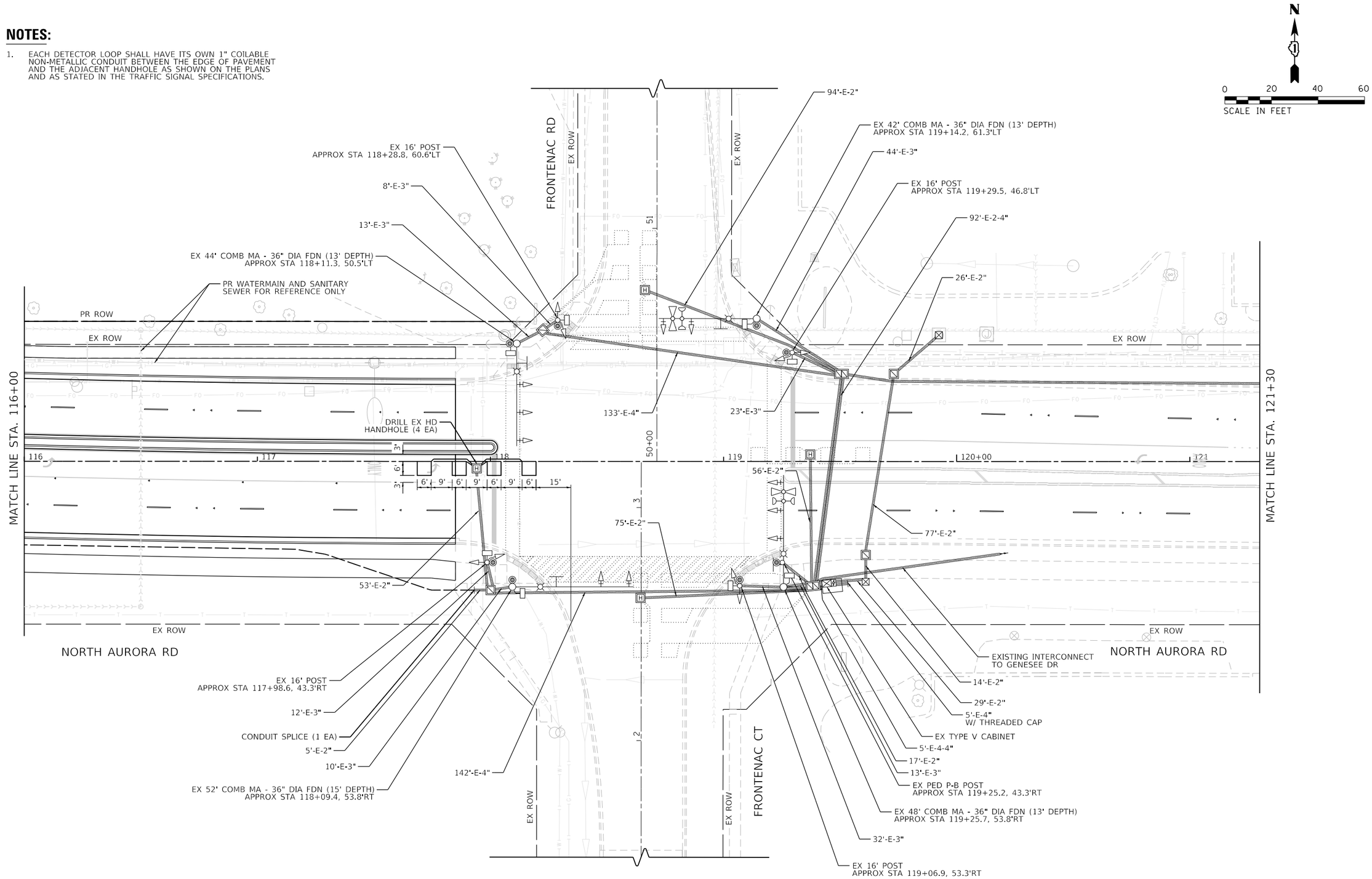


| PLAN | BY | DATE |
|---|---|---|
| SURVEYED | | |
| PLOTTED | | |
| ALIGNMENT CHECKED | | |
| RT. OF WAY CHECKED | | |
| CADD FILE NAME | | |
| NOTE BOOK NO. | | |

| PROFILE | BY | DATE |
|---|---|---|
| SURVEYED | | |
| PLOTTED | | |
| GRADES CHECKED | | |
| B.M. NOTED | | |
| STRUCTURE NOTATNS CHKD | | |
| NOTE BOOK NO. | | |

FILE NAME = 060092-sht-TS0151.dgn

TRANSYSTEMS

| | | | |
|---|---|---|---|
| USER NAME = brvanderwal | DESIGNED - GR | REVISED - | |
| | DRAWN - GR | REVISED - | |
| PLOT SCALE = 40.0000 ' / in. | CHECKED - BVW | REVISED - | |
| PLOT DATE = 1/25/2025 | DATE - 1/25/2025 | REVISED - | |

**STATE OF ILLINOIS**
**DEPARTMENT OF TRANSPORTATION**

**TRAFFIC SIGNAL INSTALLATION PLAN**
**NORTH AURORA ROAD AND FRONTENAC ROAD (SHEET 1 OF 2)**

SCALE: 1"=20' | SHEET 16 OF 32 SHEETS | STA. TO STA.

| F.A.U. RTE. | SECTION | COUNTY | TOTAL SHEETS | SHEET NO. |
|---|---|---|---|---|
| 1509 | 06-00133-00-BR | DuPAGE | 426 | 121 |

CONTRACT NO. 61G79

ILLINOIS FED. AID PROJECT

## NOTES:

1. EACH DETECTOR LOOP SHALL HAVE ITS OWN 1" COILABLE NON-METALLIC CONDUIT BETWEEN THE EDGE OF PAVEMENT AND THE ADJACENT HANDHOLE AS SHOWN ON THE PLANS AND AS STATED IN THE TRAFFIC SIGNAL SPECIFICATIONS.

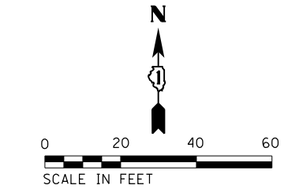


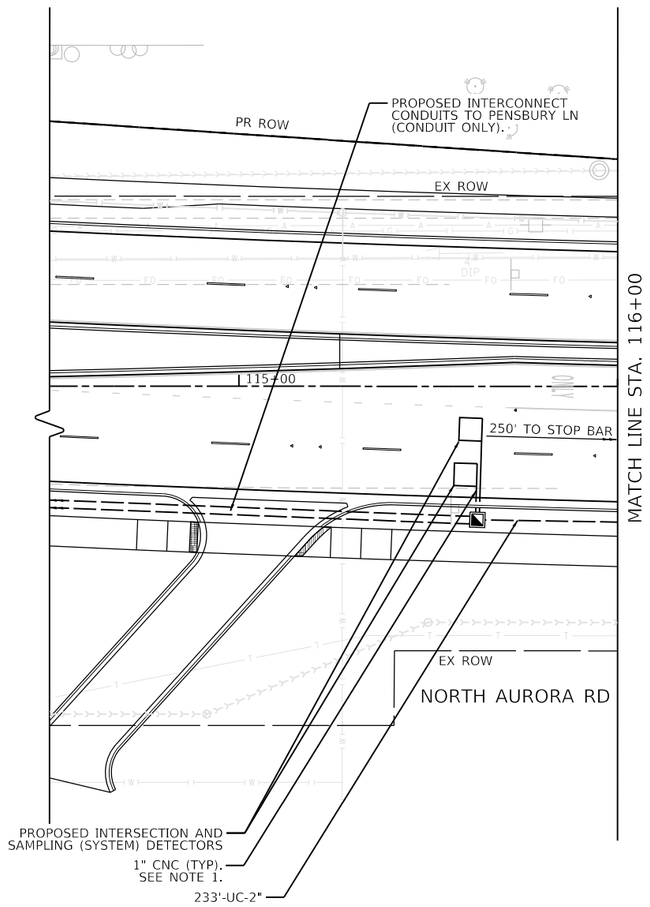


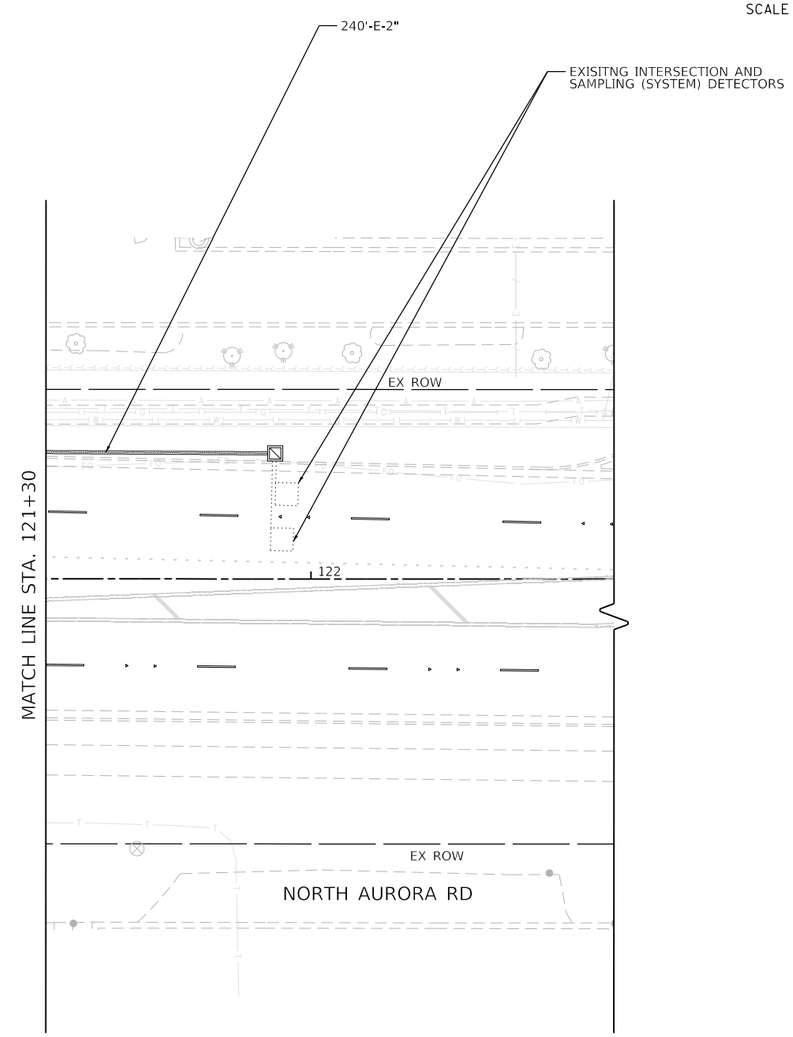


| PLAN | BY | DATE |
|---|---|---|
| SURVEYED | | |
| PLOTTED | | |
| ALIGNMENT CHECKED | | |
| RT. OF WAY CHECKED | | |
| CADD FILE NAME | | |
| NOTE BOOK NO. | | |

| PROFILE | BY | DATE |
|---|---|---|
| SURVEYED | | |
| PLOTTED | | |
| GRADES CHECKED | | |
| BM. NOTED | | |
| STRUCTURE NOTAT'NS CHKD | | |
| NOTE BOOK NO. | | |

FILE NAME = 060092-sht-TS0152.dgn

TRANSYSTEMS

| | | | |
|---|---|---|---|
| USER NAME = brvanderwal | DESIGNED - GR | REVISED - | |
| | DRAWN - GR | REVISED - | |
| PLOT SCALE = 40.0000 ' / in. | CHECKED - BVW | REVISED - | |
| PLOT DATE = 1/25/2025 | DATE - 1/25/2025 | REVISED - | |

**STATE OF ILLINOIS**
**DEPARTMENT OF TRANSPORTATION**

**TRAFFIC SIGNAL INSTALLATION PLAN**
**NORTH AURORA ROAD AND FRONTENAC ROAD (SHEET 2 OF 2)**

SCALE: 1"=20' | SHEET 17 OF 32 SHEETS | STA. TO STA.

| F.A.U. RTE. | SECTION | COUNTY | TOTAL SHEETS | SHEET NO. |
|---|---|---|---|---|
| 1509 | 06-00133-00-BR | DuPAGE | 426 | 122 |

CONTRACT NO. 61G79

ILLINOIS FED. AID PROJECT

## PROPOSED CONTROLLER SEQUENCE

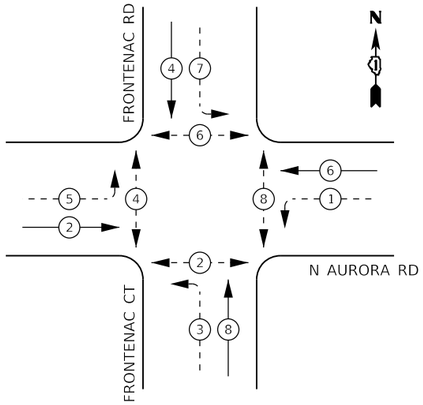


## LEGEND:

- PROTECTED PHASE
- PROTECTED/PERMITTED PHASE
- PEDESTRIAN PHASE
- OL OVERLAP

## PROPOSED EMERGENCY VEHICLE PREEMPTION SEQUENCE

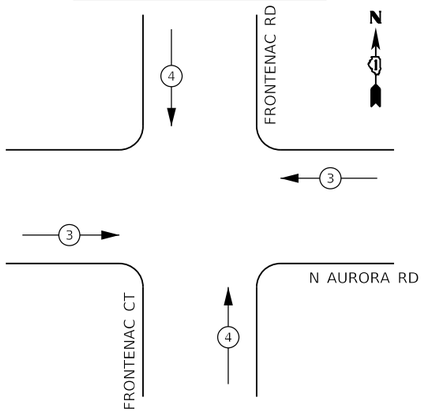


## TRAFFIC SIGNAL ELECTRICAL SERVICE REQUIREMENTS

| TYPE | NO. OF LAMPS | LED WATTAGE | % OPERATION | TOTAL WATTAGE |
|---|---|---|---|---|
| SIGNAL (RED) | 18 | 11 | 50 | 99.0 |
| (YELLOW) | 18 | 20 | 5 | 18.0 |
| (GREEN) | 18 | 12 | 45 | 97.2 |
| PERMISSIVE ARROW | 16 | 10 | 10 | 16.0 |
| PED. SIGNAL | 8 | 20 | 100 | 160.0 |
| CONTROLLER | 1 | 100 | 100 | 100.0 |
| UPS | 1 | 25 | 100 | 25.0 |
| RADAR DETECTOR | 2 | 20 | 100 | 40.0 |
| BLANK-OUT SIGN | 0 | 25 | 5 | - |
| FLASHER | 0 | - | 50 | - |
| STREET NAME SIGN | 4 | 120 | 50 | 240.0 |
| LUMINAIRE | 4 | 285 | 50 | 570.0 |
| | | | TOTAL = | 1365.2 |

ENERGY COSTS TO:

CITY OF NAPERVILLE

ENERGY SUPPLY: CONTACT:

PHONE:

COMPANY: NAPERVILLE ELECTRIC DEPT.

ACCOUNT NUMBER:

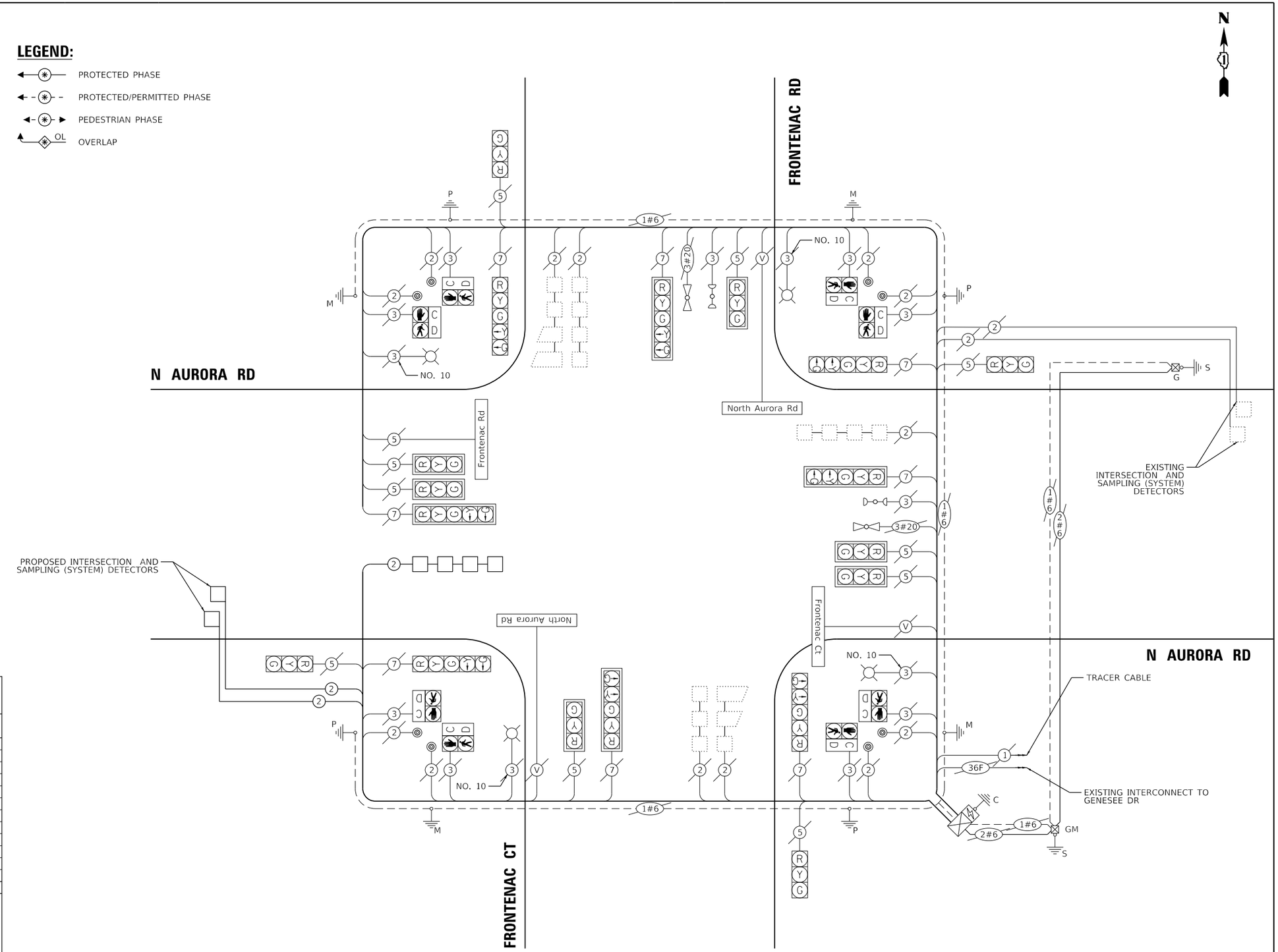


## CABLE PLAN

(NOT TO SCALE)

PLAN — SURVEYED / PLOTTED / ALIGNMENT CHECKED / RT. OF WAY CHECKED / CADD FILE NAME — NOTE BOOK NO. — BY — DATE

PROFILE — SURVEYED / PLOTTED / GRADES CHECKED / BM. NOTED / STRUCTURE NOTATNS CHKD — NOTE BOOK NO. — BY — DATE

FILE NAME = 060092-sht-TS016i.dgn

TRANSYSTEMS

| | | | |
|---|---|---|---|
| USER NAME = brvanderwal | DESIGNED - GR | REVISED - | |
| | DRAWN - GR | REVISED - | |
| PLOT SCALE = 40.0000 ' / in. | CHECKED - BVW | REVISED - | |
| PLOT DATE = 1/25/2025 | DATE - 1/25/2025 | REVISED - | |

STATE OF ILLINOIS
DEPARTMENT OF TRANSPORTATION

CABLE PLAN, PHASE DESIGNATION DIAGRAM, AND EMERGENCY VEHICLE PREEMPTION SEQUENCE
NORTH AURORA ROAD AND FRONTENAC ROAD

SCALE: 1"=20' | SHEET 18 OF 32 SHEETS | STA. TO STA.

| F.A.U. RTE. | SECTION | COUNTY | TOTAL SHEETS | SHEET NO. |
|---|---|---|---|---|
| 1509 | 06-00133-00-BR | DuPAGE | 426 | 123 |

CONTRACT NO. 61G79

ILLINOIS FED. AID PROJECT

## SCHEDULE OF QUANTITIES

| PAY ITEM NAME | UNIT | QUANTITY |
|---|---|---|
| ELECTRIC UTILITY SERVICE CONNECTION | L SUM | 0.50 |
| UNDERGROUND CONDUIT, GALVANIZED STEEL, 2" DIA. | FOOT | 233 |
| HANDHOLE | EACH | 1 |
| ELECTRIC CABLE IN CONDUIT, LEAD-IN, NO. 14 1 PAIR | FOOT | 1,070 |
| DRILL EXISTING HEAVY DUTY HANDHOLE | EACH | 4 |
| INDUCTIVE LOOP DETECTOR | EACH | 3 |
| DETECTOR LOOP, TYPE I | FOOT | 216 |
| TEMPORARY TRAFFIC SIGNAL INSTALLATION | EACH | 1 |
| MODIFY EXISTING CONTROLLER CABINET | EACH | 1 |
| REMOVE EXISTING TRAFFIC SIGNAL EQUIPMENT | EACH | 1 |
| CONDUIT SPLICE | EACH | 1 |
| RE-OPTIMIZE TRAFFIC SIGNAL SYSTEM LEVEL 1 | EACH | 1 |
| TEMPORARY TRAFFIC SIGNAL TIMING | EACH | 1 |

PLAN
SURVEYED
PLOTTED
ALIGNMENT CHECKED
RT. OF WAY CHECKED
CADD FILE NAME
NOTE BOOK
NO.
BY
DATE

PROFILE
SURVEYED
PLOTTED
GRADES CHECKED
B.M. NOTED
STRUCTURE NOTATNS CHKD
NOTE BOOK
NO.
BY
DATE

FILE NAME = 060092-sht-TS0171

TRANSYSTEMS

| | | | |
|---|---|---|---|
| USER NAME = brvanderwal | DESIGNED - GR | REVISED - | |
| | DRAWN - GR | REVISED - | |
| PLOT SCALE = 40.0000 ' / in. | CHECKED - BVW | REVISED - | |
| PLOT DATE = 1/25/2025 | DATE - 1/25/2025 | REVISED - | |

STATE OF ILLINOIS
DEPARTMENT OF TRANSPORTATION

SCHEDULE OF QUANTITIES
NORTH AURORA ROAD AND FRONTENAC ROAD

SCALE: 1"=20' | SHEET 19 OF 32 SHEETS | STA. TO STA.

| F.A.U. RTE. | SECTION | COUNTY | TOTAL SHEETS | SHEET NO. |
|---|---|---|---|---|
| 1509 | 06-00133-00-BR | DuPAGE | 426 | 124 |

CONTRACT NO. 61G79

ILLINOIS FED. AID PROJECT

## NOTES:

1. EXISTING TRAFFIC SIGNAL INSTALLATION AT THIS LOCATION SHALL BE DE-ENERGIZED AND DE-ACTIVATED FOR THE DURATION OF CONTRACT. EXISTING SIGNAL HEADS AND PUSH-BUTTONS SHALL BE DE-ENERGIZED AND COVERED. THE EXISTING TRAFFIC SIGNAL INSTALLATION SHALL BE RE-ACTIVATED UPON CONTRACT COMPLETION. PROTECTION AND MAINTENANCE OF EXISTING TRAFFIC SIGNAL EQUIPMENT IS INCLUDED IN THE UNIT COST OF TEMPORARY TRAFFIC SIGNAL INSTALLATION.

2. LUMINAIRE ATTACHED TO TEMPORARY WOOD POLES SHALL BE MOUNTED AT A HEIGHT OF 45 FT ABOVE PAVEMENT. PROVIDE WOOD POLE OF APPROPRIATE LENGTH AS NOTED IN THE SPECIFICATIONS FOR TEMPORARY TRAFFIC SIGNAL INSTALLATION.

3. DE-ACTIVATE FIBER OPTIC INTERCONNECT AND PROVIDE BROADBAND RADIO INTERCONNECT BETWEEN EOLA RD AND PENNSBURY LN FOR THE DURATION OF THIS CONTRACT. INSTALL WIRELESS INTERCONNECT ANTENNA TO MAST ARM POLE AT SOUTHEAST CORNER OF EOLA ROAD AND NORTH AURORA RD WITH COAXIAL CABLE TO EXISTING CONTROLLER CABINET. INSTALL AND CONNECT WIRELESS INTERCONNECT CARD IN EXISTING SIGNAL CABINET. RESTORE FIBER OPTIC INTERCONNECT UPON CONTRACT COMPLETION. THE COST OF THIS WORK IS INCLUDED IN THE UNIT COST FOR MAINTENANCE OF EXISTING TRAFFIC SIGNAL INSTALLATION. THE INTERCONNECT WORK SHALL BE COORDINATED WITH DUDOT AND CITY OF AURORA TO ENSURE THE DISRUPTIONS TO THE NETWORK COMMUNICATIONS ARE KEPT TO A MINIMUM.

4. RELOCATE EXISTING PTZ CAMERA FROM EXISTING TRAFFIC SIGNAL MAST ARM ASSEMBLY TO THE TEMPORARY TRAFFIC SIGNAL WOOD POLE FOR THE DURATION OF THE CONTRACT. CONTRACTOR SHALL FURNISH AND INSTALL ALL EQUIPMENT NECESSARY TO CONNECT THIS CAMERA TO THE EXISTING COMMUNICATION NETWORK VIA THE BROADBAND RADIO INTERCONNECT LINK TO EOLA RD, INCLUDING BUT NOT LIMITED TO ETHERNET CABLE FROM CAMERA TO TEMPORARY SIGNAL CABINET AND NETWORK SWITCH. UPON CONTRACT COMPLETION THE PTZ CAMERA SHALL BE RELOCATED AND RESTORED TO ITS CURRENT LOCATION AND OPERATIONS. THE COST OF THIS WORK SHALL BE INCLUDED IN THE UNIT COST FOR TEMPORARY TRAFFIC SIGNAL INSTALLATION AT PENNSBURY LN AND NORTH AURORA RD. INCLUDED IN THESE PLANS FOR INFORMATION ONLY ARE THE INDIAN TRAIL AT EOLA RD TRAFFIC SIGNAL MODERNIZATION RECORD DRAWINGS.

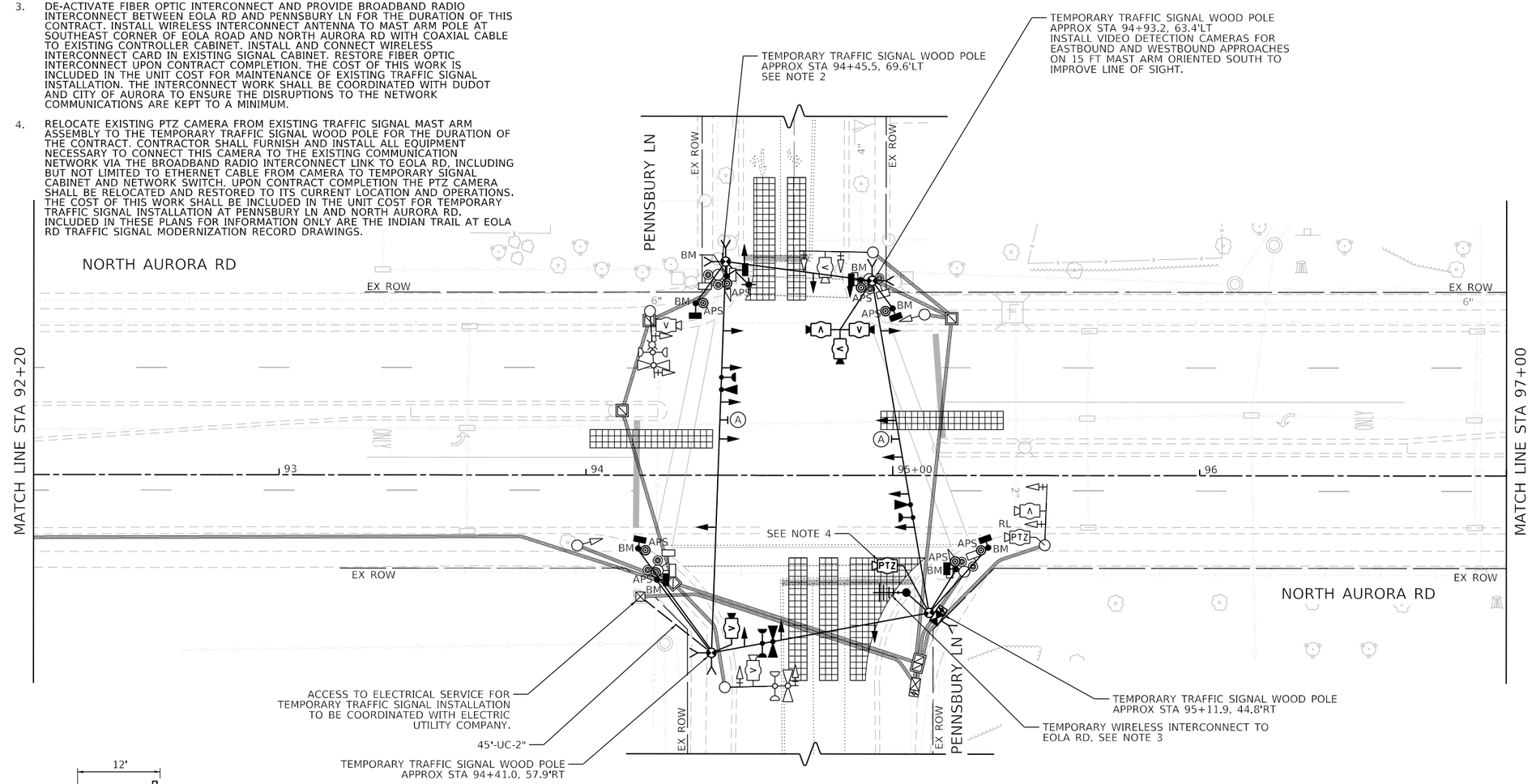


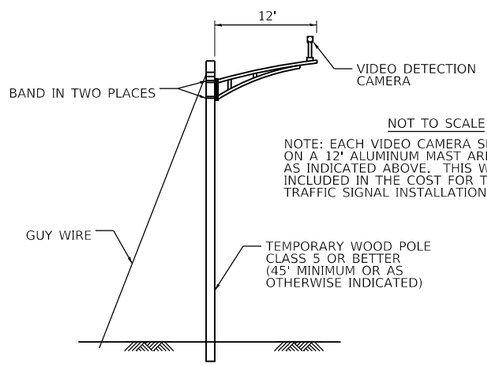


NOT TO SCALE

NOTE: EACH VIDEO CAMERA SHALL BE MOUNTED ON A 12' ALUMINUM MAST ARM ON WOOD POLE AS INDICATED ABOVE. THIS WORK WILL BE INCLUDED IN THE COST FOR TEMPORARY TRAFFIC SIGNAL INSTALLATION.

**TEMPORARY VIDEO DETECTION MOUNTING DETAIL**

R10-5
30"x36"
(2 REQUIRED)
SIGN PANEL TYPE 1
(INCLUDED IN THE COST OF TEMPORARY TRAFFIC SIGNAL INSTALLATION)

| PLAN | BY | DATE |
|---|---|---|
| SURVEYED | | |
| PLOTTED | | |
| ALIGNMENT CHECKED | | |
| RT. OF WAY CHECKED | | |
| CADD FILE NAME | | |
| NOTE BOOK NO. | | |

| PROFILE | BY | DATE |
|---|---|---|
| SURVEYED | | |
| PLOTTED | | |
| GRADES CHECKED | | |
| B.M. NOTED | | |
| STRUCTURE NOTAT'NS CHKD | | |
| NOTE BOOK NO. | | |

FILE NAME = 060092-sht-TS0211-dgn

TRANSYSTEMS

| | | | |
|---|---|---|---|
| USER NAME = brvanderwal | DESIGNED - GR | REVISED - | |
| | DRAWN - GR | REVISED - | |
| PLOT SCALE = 40.0000 ' / in. | CHECKED - BVW | REVISED - | |
| PLOT DATE = 1/25/2025 | DATE - 1/25/2025 | REVISED - | |

**STATE OF ILLINOIS**
**DEPARTMENT OF TRANSPORTATION**

**TEMPORARY TRAFFIC SIGNAL INSTALLATION PLAN**
**NORTH AURORA ROAD AND PENNSBURY LANE (SHEET 1 OF 2)**

SCALE: 1"=20' | SHEET 20 OF 32 SHEETS | STA. TO STA.

| F.A.U. RTE. | SECTION | COUNTY | TOTAL SHEETS | SHEET NO. |
|---|---|---|---|---|
| 1509 | 06-00133-00-BR | DuPAGE | 426 | 125 |

CONTRACT NO. 61G79

ILLINOIS FED. AID PROJECT

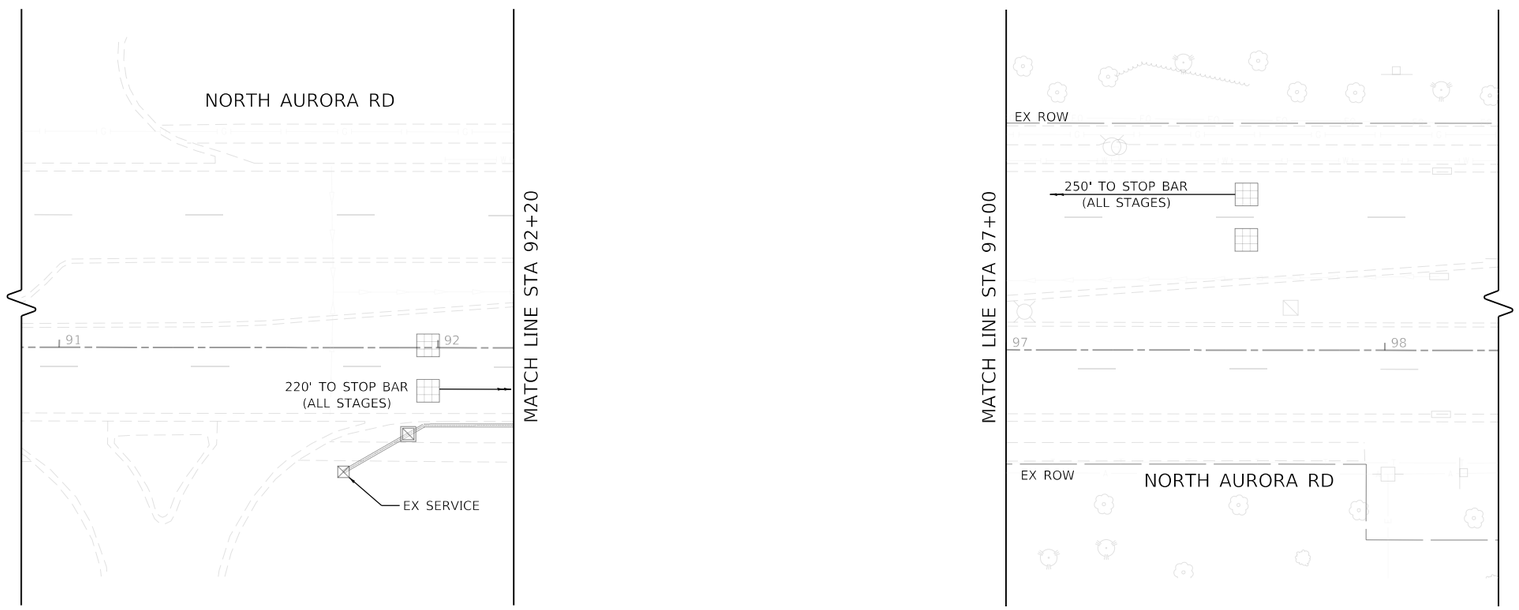


N

0 20 40 60

SCALE IN FEET

| PLAN | | BY | DATE |
|---|---|---|---|
| | SURVEYED | | |
| | PLOTTED | | |
| | ALIGNMENT CHECKED | | |
| NOTE BOOK | RT. OF WAY CHECKED | | |
| NO. ____ | CADD FILE NAME | | |

| PROFILE | | BY | DATE |
|---|---|---|---|
| | SURVEYED | | |
| | PLOTTED | | |
| | GRADES CHECKED | | |
| NOTE BOOK | BM. NOTED | | |
| NO. ____ | STRUCTURE NOTATNS CHKD | | |

FILE NAME = 060092-sht-TS0212.dgn

TRANSYSTEMS

| | | |
|---|---|---|
| USER NAME = brvanderwal | DESIGNED - GR | REVISED - |
| | DRAWN - GR | REVISED - |
| PLOT SCALE = 40.0000 ' / in. | CHECKED - BVW | REVISED - |
| PLOT DATE = 1/25/2025 | DATE - 1/25/2025 | REVISED - |

**STATE OF ILLINOIS**
**DEPARTMENT OF TRANSPORTATION**

**TEMPORARY TRAFFIC SIGNAL INSTALLATION PLAN**
**NORTH AURORA ROAD AND PENNSBURY LANE (SHEET 2 OF 2)**

SCALE: 1"=20' | SHEET 21 OF 32 SHEETS | STA. TO STA.

| F.A.U. RTE. | SECTION | COUNTY | TOTAL SHEETS | SHEET NO. |
|---|---|---|---|---|
| 1509 | 06-00133-00-BR | DuPAGE | 426 | 126 |
| | | CONTRACT NO. 61G79 | | |
| | ILLINOIS | FED. AID PROJECT | | |

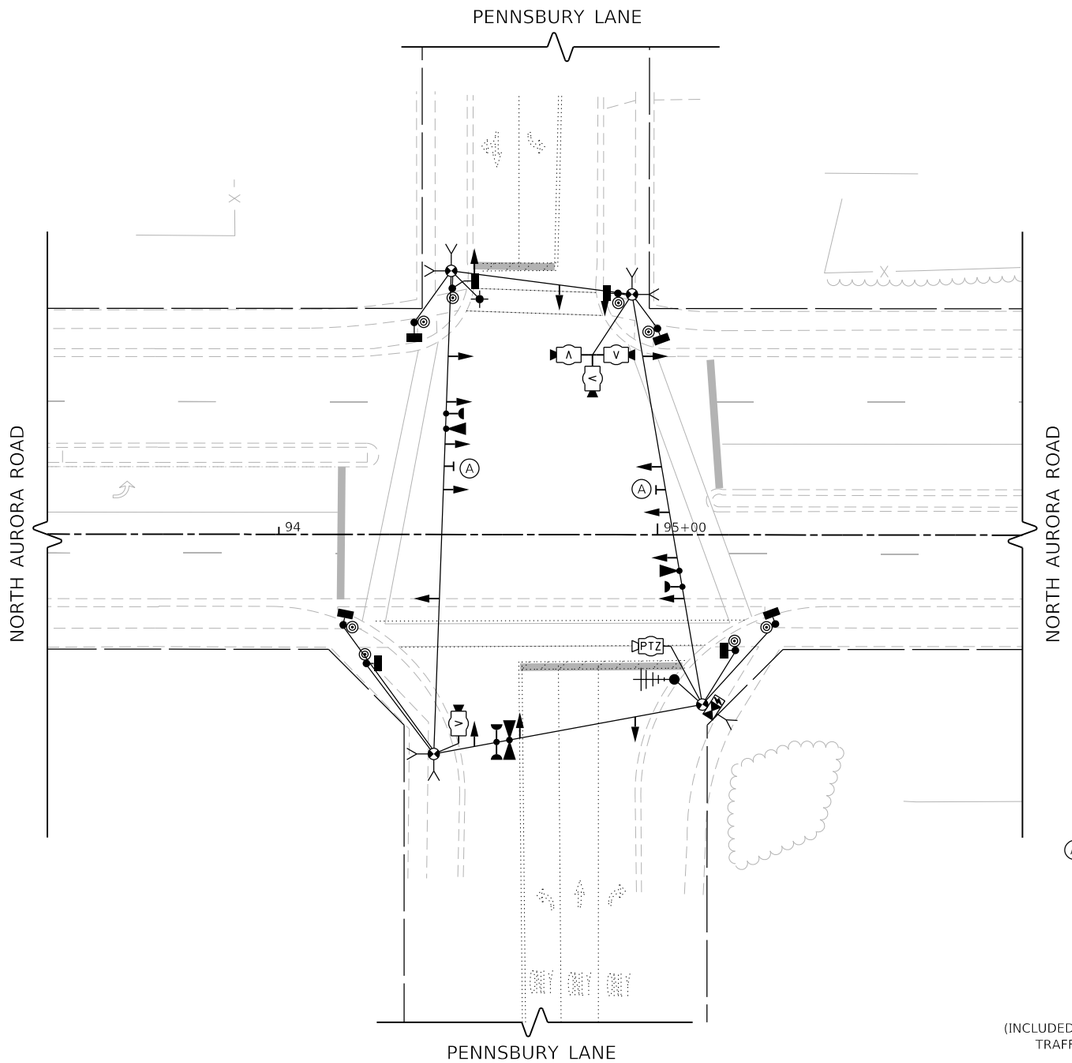


**TEMPORARY TRAFFIC SIGNAL PRE–STAGE, STAGE 1, STAGE 2, STAGE 3 & STAGE 4**

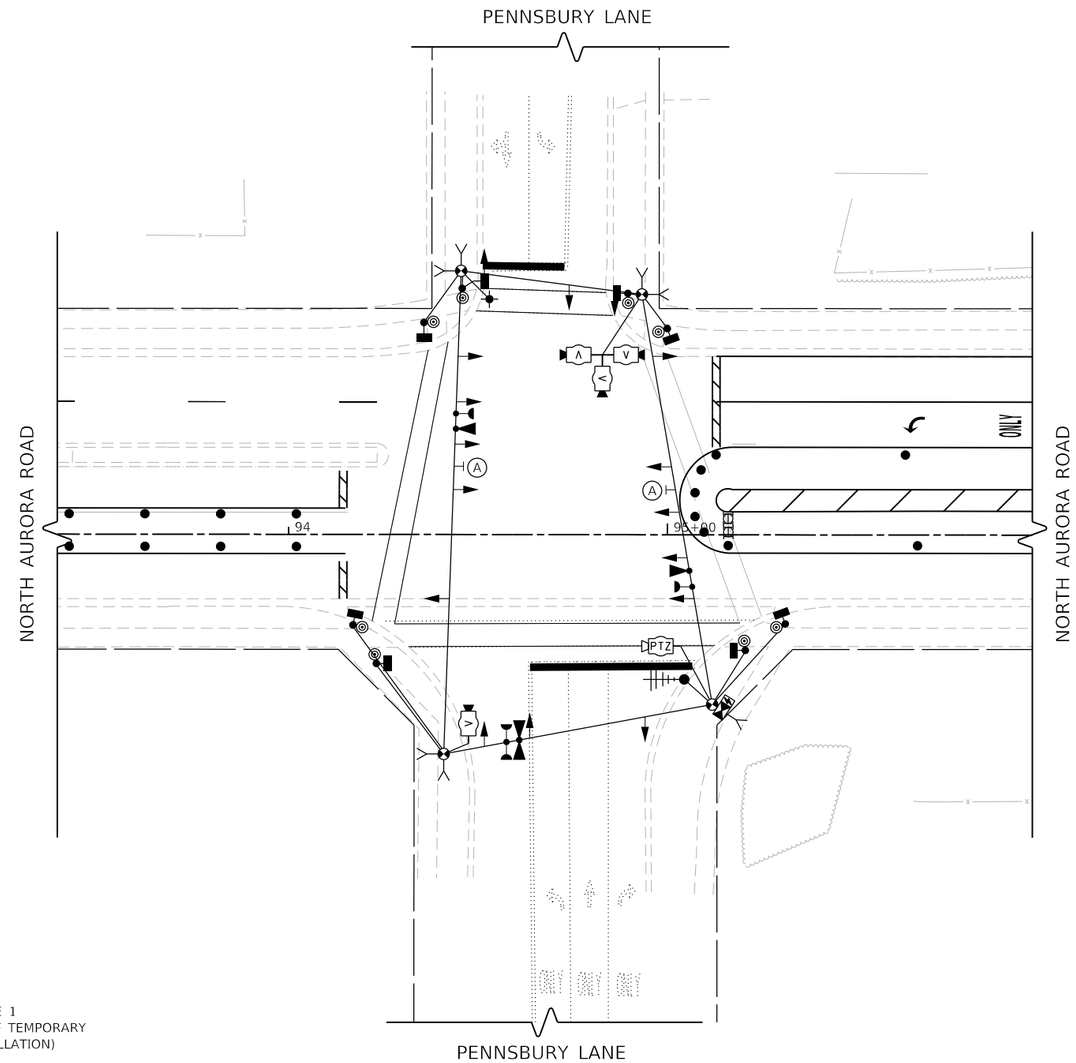


**TEMPORARY TRAFFIC SIGNAL STAGE 5**

A

LEFT ON GREEN ARROW ONLY

R10-5
30"x36"
(2 REQUIRED)
SIGN PANEL TYPE 1
(INCLUDED IN THE COST OF TEMPORARY TRAFFIC SIGNAL INSTALLATION)

| PLAN | | BY | DATE |
|---|---|---|---|
| NOTE BOOK NO. ____ | SURVEYED ____ PLOTTED ____ ALIGNMENT CHECKED ____ RT. OF WAY CHECKED ____ CADD FILE NAME ____ | | |

| PROFILE | | BY | DATE |
|---|---|---|---|
| NOTE BOOK NO. ____ | SURVEYED ____ PLOTTED ____ GRADES CHECKED ____ B.M. NOTED ____ STRUCTURE NOTAT'NS CH'KD ____ | | |

FILE NAME = 0608092-sht-TS0213.dgn

TRANSYSTEMS

| | | |
|---|---|---|
| USER NAME = brvanderwal | DESIGNED - GR | REVISED - |
| | DRAWN - GR | REVISED - |
| PLOT SCALE = 40.0000 ' / in. | CHECKED - BVW | REVISED - |
| PLOT DATE = 1/25/2025 | DATE - 1/25/2025 | REVISED - |

**STATE OF ILLINOIS**
**DEPARTMENT OF TRANSPORTATION**

**TEMPORARY TRAFFIC SIGNAL STAGING PLAN**
**NORTH AURORA ROAD AND PENNSBURY LANE (SHEET 1 OF 3)**

SCALE: 1"=20' | SHEET 22 OF 32 SHEETS | STA. TO STA.

| F.A.U. RTE. | SECTION | COUNTY | TOTAL SHEETS | SHEET NO. |
|---|---|---|---|---|
| 1509 | 06-00133-00-BR | DuPAGE | 426 | 127 |

CONTRACT NO. 61G79

ILLINOIS FED. AID PROJECT

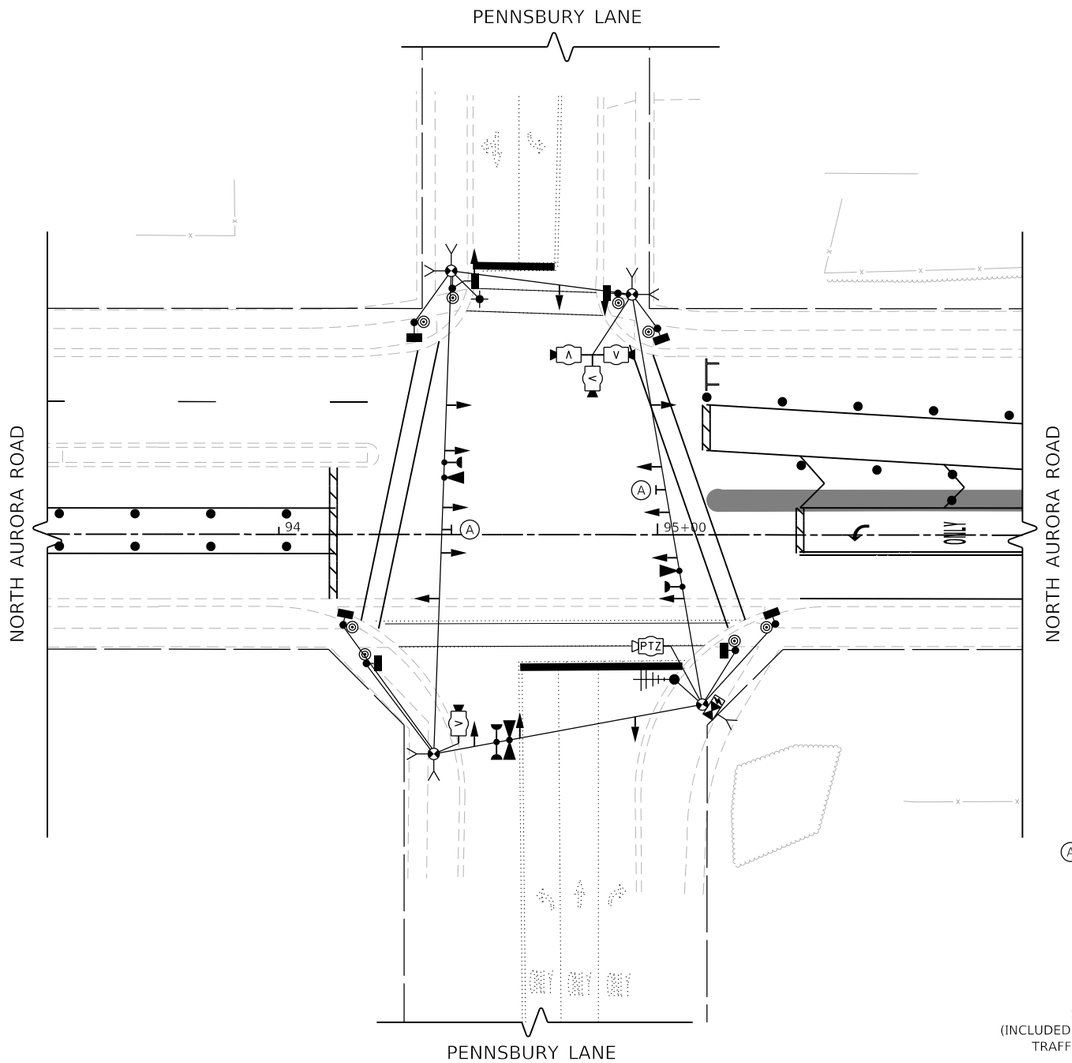


## TEMPORARY TRAFFIC SIGNAL STAGE 6

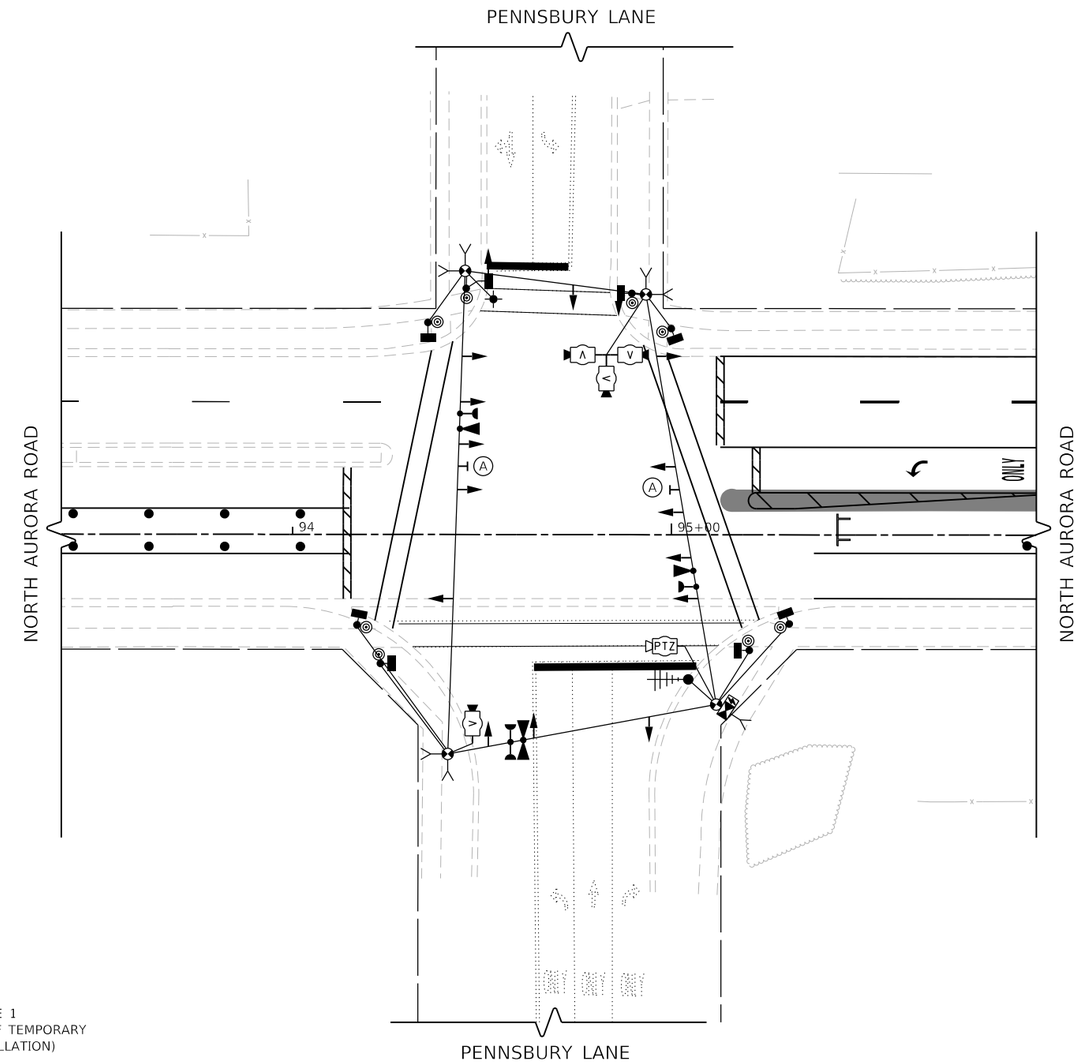


## TEMPORARY TRAFFIC SIGNAL STAGE 7 & STAGE 8

R10-5
30"x36"
(2 REQUIRED)
SIGN PANEL TYPE 1
(INCLUDED IN THE COST OF TEMPORARY
TRAFFIC SIGNAL INSTALLATION)

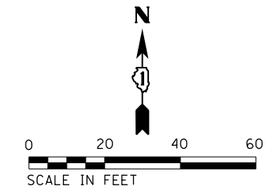


| PLAN | | BY | DATE |
|---|---|---|---|
| NOTE BOOK NO. ____ | SURVEYED | | |
| | PLOTTED | | |
| | ALIGNMENT CHECKED | | |
| | RT. OF WAY CHECKED | | |
| | CADD FILE NAME | | |

| PROFILE | | BY | DATE |
|---|---|---|---|
| NOTE BOOK NO. ____ | SURVEYED ____ | | |
| | PLOTTED | | |
| | GRADES CHECKED | | |
| | B.M. NOTED | | |
| | STRUCTURE NOTAT'NS CHK'D | | |

FILE NAME = 0608092-sht-TS0214.dgn

TRANSYSTEMS

| | | |
|---|---|---|
| USER NAME = brvanderwal | DESIGNED - GR | REVISED - |
| | DRAWN - GR | REVISED - |
| PLOT SCALE = 40.0000 ' / in. | CHECKED - BVW | REVISED - |
| PLOT DATE = 1/25/2025 | DATE - 1/25/2025 | REVISED - |

**STATE OF ILLINOIS**
**DEPARTMENT OF TRANSPORTATION**

**TEMPORARY TRAFFIC SIGNAL STAGING PLAN**
**NORTH AURORA ROAD AND PENNSBURY LANE (SHEET 2 OF 3)**

SCALE: 1"=20' | SHEET 23 OF 32 SHEETS | STA. TO STA.

| F.A.U. RTE. | SECTION | COUNTY | TOTAL SHEETS | SHEET NO. |
|---|---|---|---|---|
| 1509 | 06-00133-00-BR | DuPAGE | 426 | 128 |

CONTRACT NO. 61G79

ILLINOIS FED. AID PROJECT

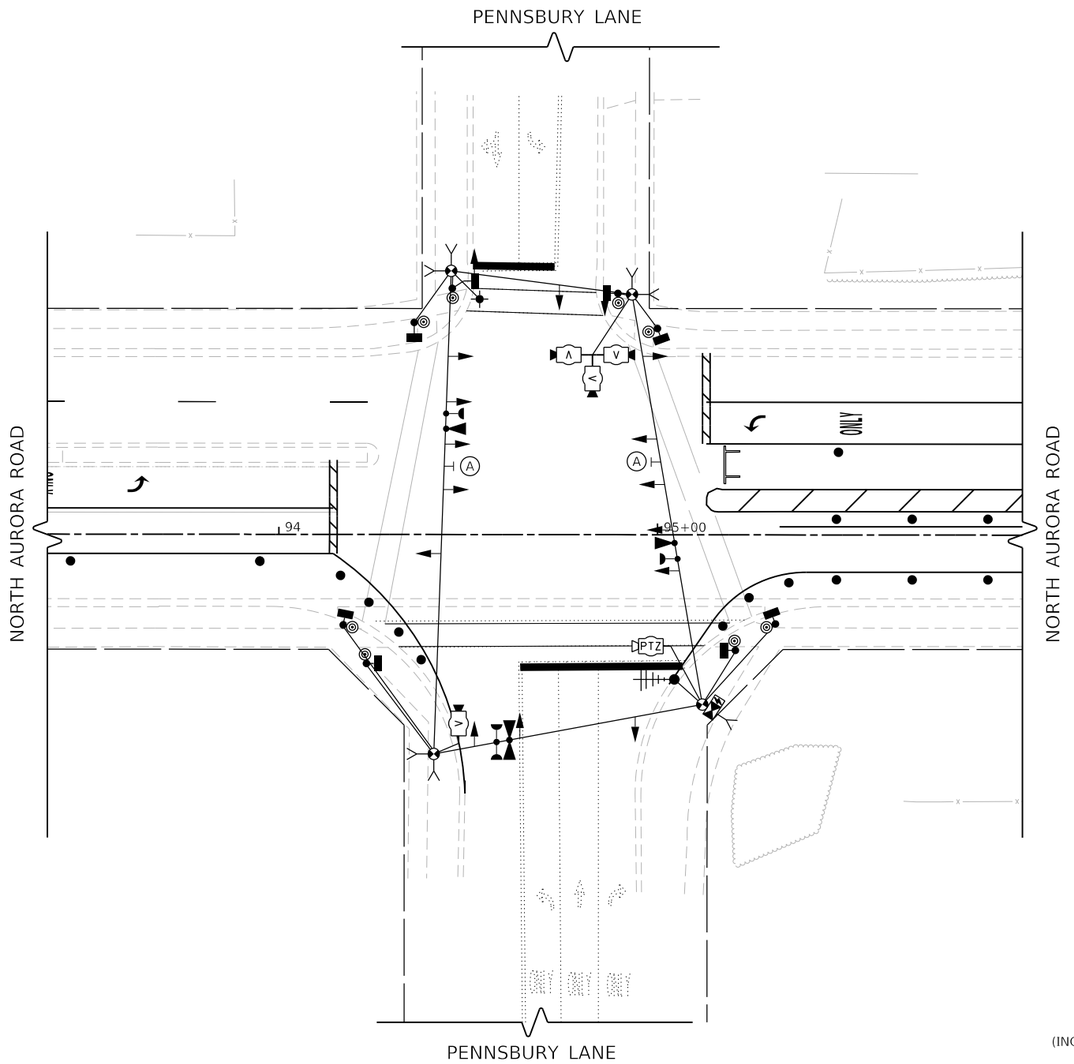


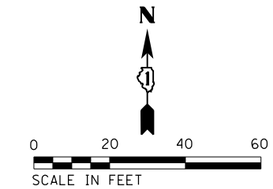


Ⓐ LEFT ON GREEN ARROW ONLY

R10-5
30"x36"
(2 REQUIRED)
SIGN PANEL TYPE 1
(INCLUDED IN THE COST OF TEMPORARY TRAFFIC SIGNAL INSTALLATION)

## TEMPORARY TRAFFIC SIGNAL STAGE 9

| PLAN | BY | DATE |
|---|---|---|
| SURVEYED | | |
| PLOTTED | | |
| ALIGNMENT CHECKED | | |
| RT. OF WAY CHECKED | | |
| CADD FILE NAME | | |
| NOTE BOOK NO. | | |

| PROFILE | BY | DATE |
|---|---|---|
| SURVEYED | | |
| PLOTTED | | |
| GRADES CHECKED | | |
| BM. NOTED | | |
| STRUCTURE NOTAT'NS CHK'D | | |
| NOTE BOOK NO. | | |

FILE NAME = 060092-sht-TS0215.dgn

TRANSYSTEMS

| | | |
|---|---|---|
| USER NAME = brvanderwal | DESIGNED - GR | REVISED - |
| | DRAWN - GR | REVISED - |
| PLOT SCALE = 40.0000 ' / in. | CHECKED - BVW | REVISED - |
| PLOT DATE = 1/25/2025 | DATE - 1/25/2025 | REVISED - |

STATE OF ILLINOIS
DEPARTMENT OF TRANSPORTATION

TEMPORARY TRAFFIC SIGNAL STAGING PLAN
NORTH AURORA ROAD AND PENNSBURY LANE (SHEET 3 OF 3)

SCALE: 1"=20' | SHEET 24 OF 32 SHEETS | STA. TO STA.

| F.A.U. RTE. | SECTION | COUNTY | TOTAL SHEETS | SHEET NO. |
|---|---|---|---|---|
| 1509 | 06-00133-00-BR | DuPAGE | 426 | 129 |

CONTRACT NO. 61G79

ILLINOIS FED. AID PROJECT

## TEMPORARY CONTROLLER SEQUENCE

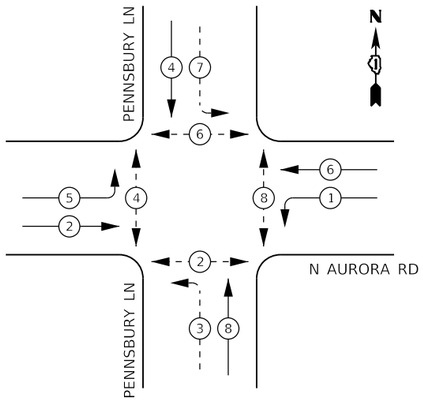


## LEGEND:

- PROTECTED PHASE
- PROTECTED/PERMITTED PHASE
- PEDESTRIAN PHASE
- OL OVERLAP

## TEMPORARY EMERGENCY VEHICLE PREEMPTION SEQUENCE

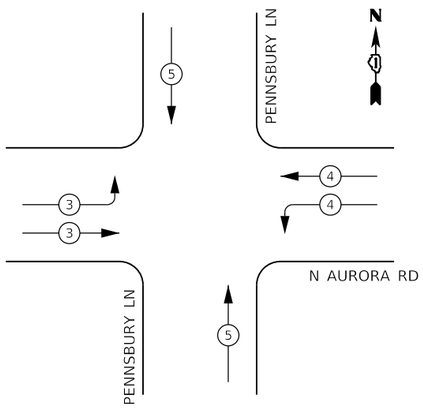


## TRAFFIC SIGNAL ELECTRICAL SERVICE REQUIREMENTS

| TYPE | NO. OF LAMPS | LED WATTAGE | % OPERATION | TOTAL WATTAGE |
|---|---|---|---|---|
| SIGNAL (RED) | 16 | 11 | 50 | 88.0 |
| (YELLOW) | 16 | 20 | 5 | 16.0 |
| (GREEN) | 16 | 12 | 45 | 86.4 |
| PERMISSIVE ARROW | 8 | 10 | 10 | 8.0 |
| PED. SIGNAL | 8 | 20 | 100 | 160.0 |
| CONTROLLER | 1 | 100 | 100 | 100.0 |
| UPS | 1 | 25 | 100 | 25.0 |
| PTZ VIDEO SYSTEM | 1 | 115 | 100 | 150.0 |
| BLANK-OUT SIGN | 0 | 25 | 5 | |
| FLASHER | 0 | - | 50 | |
| STREET NAME SIGN | 0 | 120 | 50 | |
| LUMINAIRE | 1 | 285 | 50 | 142.5 |
| | | | TOTAL = | 775.9 |

ENERGY COSTS TO:

CITY OF NAPERVILLE

ENERGY SUPPLY: CONTACT: _____

PHONE: _____

COMPANY: COMED

ACCOUNT NUMBER: _____

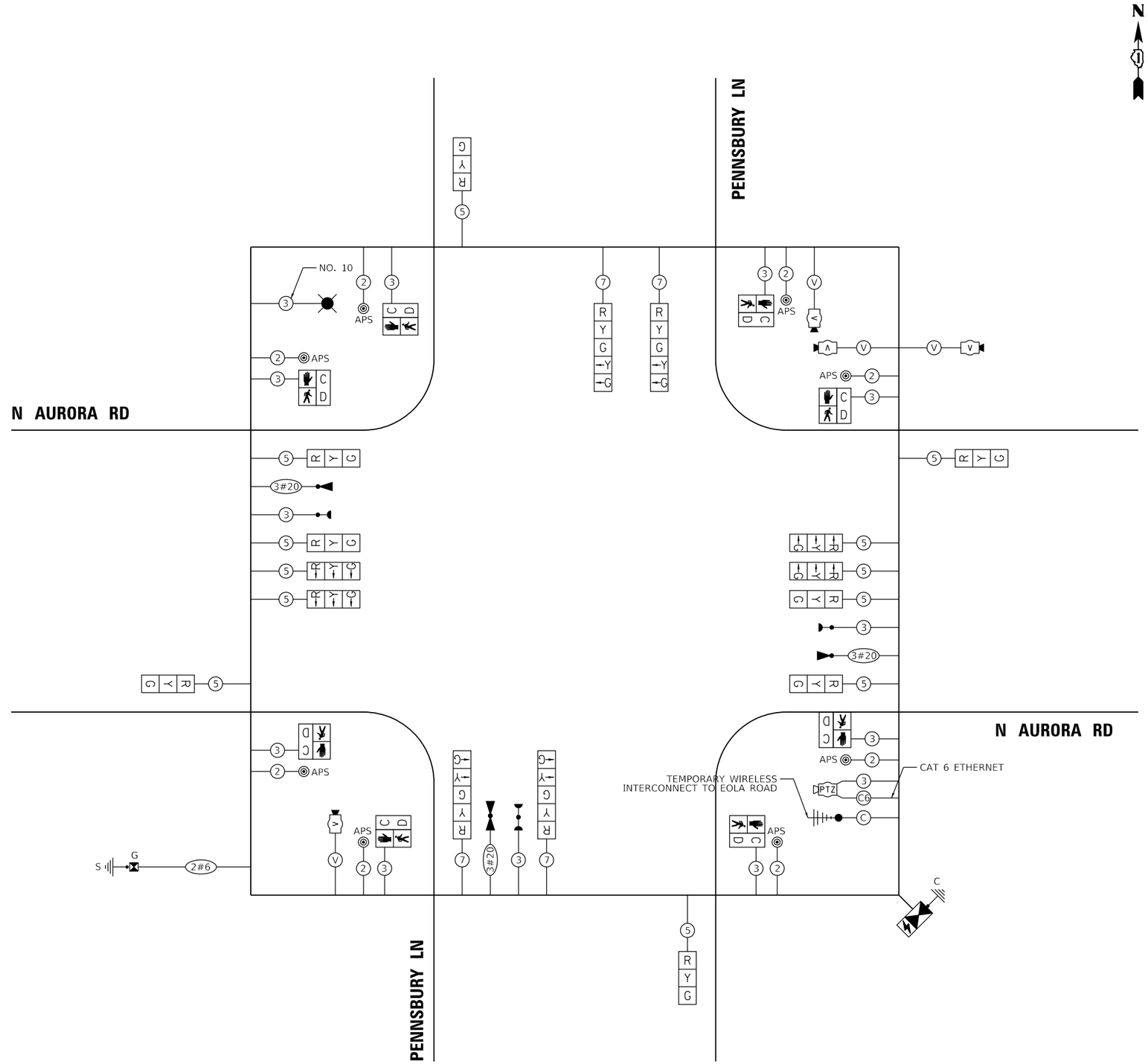


## CABLE PLAN

(NOT TO SCALE)

PLAN — SURVEYED / PLOTTED / ALIGNMENT CHECKED / RT. OF WAY CHECKED / CADD FILE NAME — NOTE BOOK NO. — BY — DATE

PROFILE — SURVEYED / PLOTTED / GRADES CHECKED / BLM. NOTED / STRUCTURE NOTATNS CHKD — NOTE BOOK NO. — BY — DATE

FILE NAME = 060092-sht-TS0221.dgn

TRANSYSTEMS

| | | | |
|---|---|---|---|
| USER NAME = brvanderwal | DESIGNED - GR | REVISED - | |
| | DRAWN - GR | REVISED - | |
| PLOT SCALE = 40.0000 ' / in. | CHECKED - BVW | REVISED - | |
| PLOT DATE = 1/25/2025 | DATE - 1/25/2025 | REVISED - | |

STATE OF ILLINOIS
DEPARTMENT OF TRANSPORTATION

TEMPORARY CABLE PLAN, TEMPORARY PHASE DESIGNATION DIAGRAM, AND TEMPORARY EMERGENCY VEHICLE PREEMPTION SEQUENCE
NORTH AURORA ROAD AND PENNSBURY LANE

SCALE: 1"=20' | SHEET 25 OF 32 SHEETS | STA. TO STA.

| F.A.U. RTE. | SECTION | COUNTY | TOTAL SHEETS | SHEET NO. |
|---|---|---|---|---|
| 1509 | 06-00133-00-BR | DuPAGE | 426 | 130 |

CONTRACT NO. 61G79

ILLINOIS FED. AID PROJECT

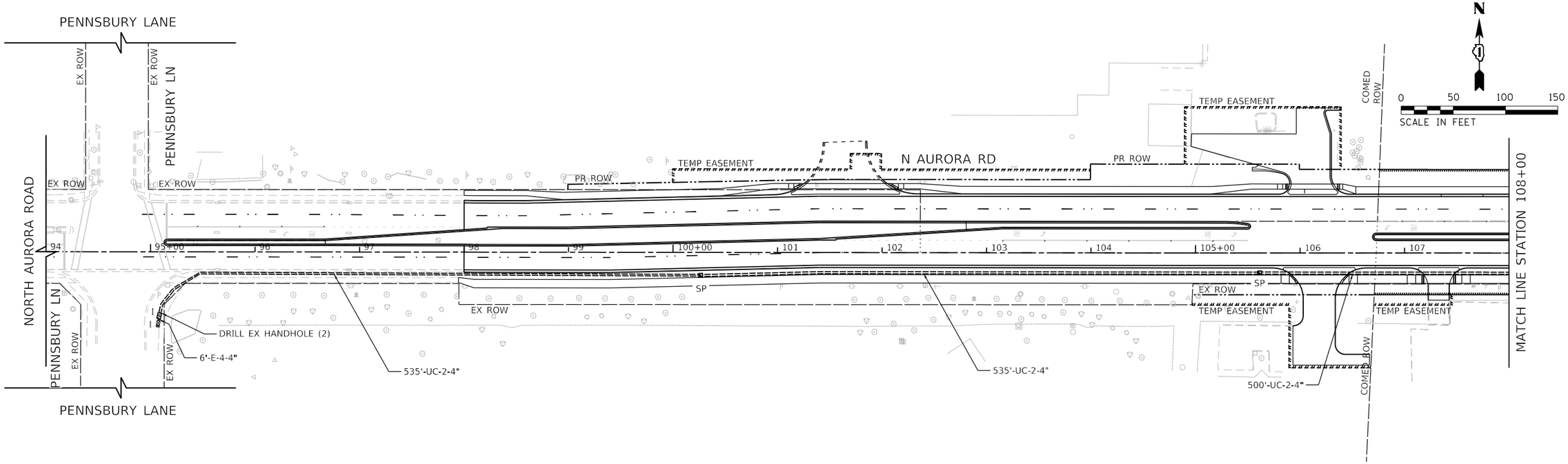


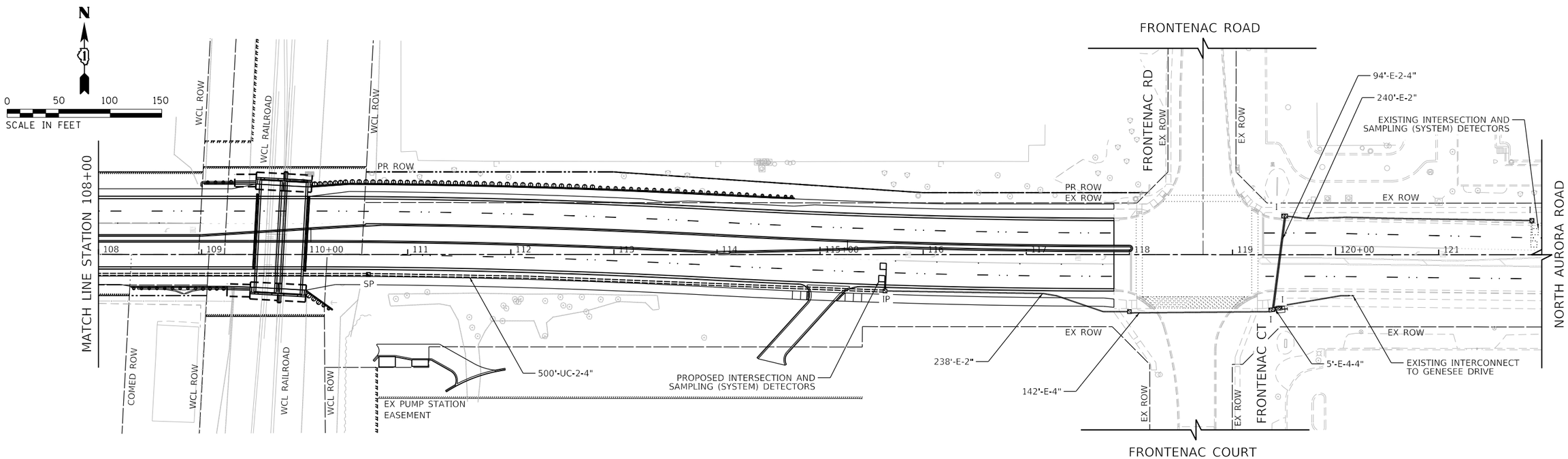


| PLAN | BY | DATE |
|---|---|---|
| SURVEYED | | |
| PLOTTED | | |
| ALIGNMENT CHECKED | | |
| RT. OF WAY CHECKED | | |
| CADD FILE NAME | | |
| NOTE BOOK NO. | | |

| PROFILE | BY | DATE |
|---|---|---|
| SURVEYED | | |
| PLOTTED | | |
| GRADES CHECKED | | |
| BM. NOTED | | |
| STRUCTURE NOTAT'NS CHK'D | | |
| NOTE BOOK NO. | | |

FILE NAME = 060092-aht-TS5610

TRANSYSTEMS

| | | | |
|---|---|---|---|
| USER NAME = brvanderwal | DESIGNED - GR | REVISED - | |
| | DRAWN - GR | REVISED - | |
| PLOT SCALE = 100.0000 ' / in. | CHECKED - BVW | REVISED - | |
| PLOT DATE = 1/25/2025 | DATE - 1/25/2025 | REVISED - | |

**STATE OF ILLINOIS**
**DEPARTMENT OF TRANSPORTATION**

**INTERCONNECT PLAN**
**NORTH AURORA ROAD – PENNSBURY LANE TO FRONTENAC ROAD**

SCALE: 1"=50' | SHEET 26 OF 32 SHEETS | STA. TO STA.

| F.A.U. RTE. | SECTION | COUNTY | TOTAL SHEETS | SHEET NO. |
|---|---|---|---|---|
| 1509 | 06-00133-00-BR | DuPAGE | 426 | 131 |

CONTRACT NO. 61G79

ILLINOIS FED. AID PROJECT

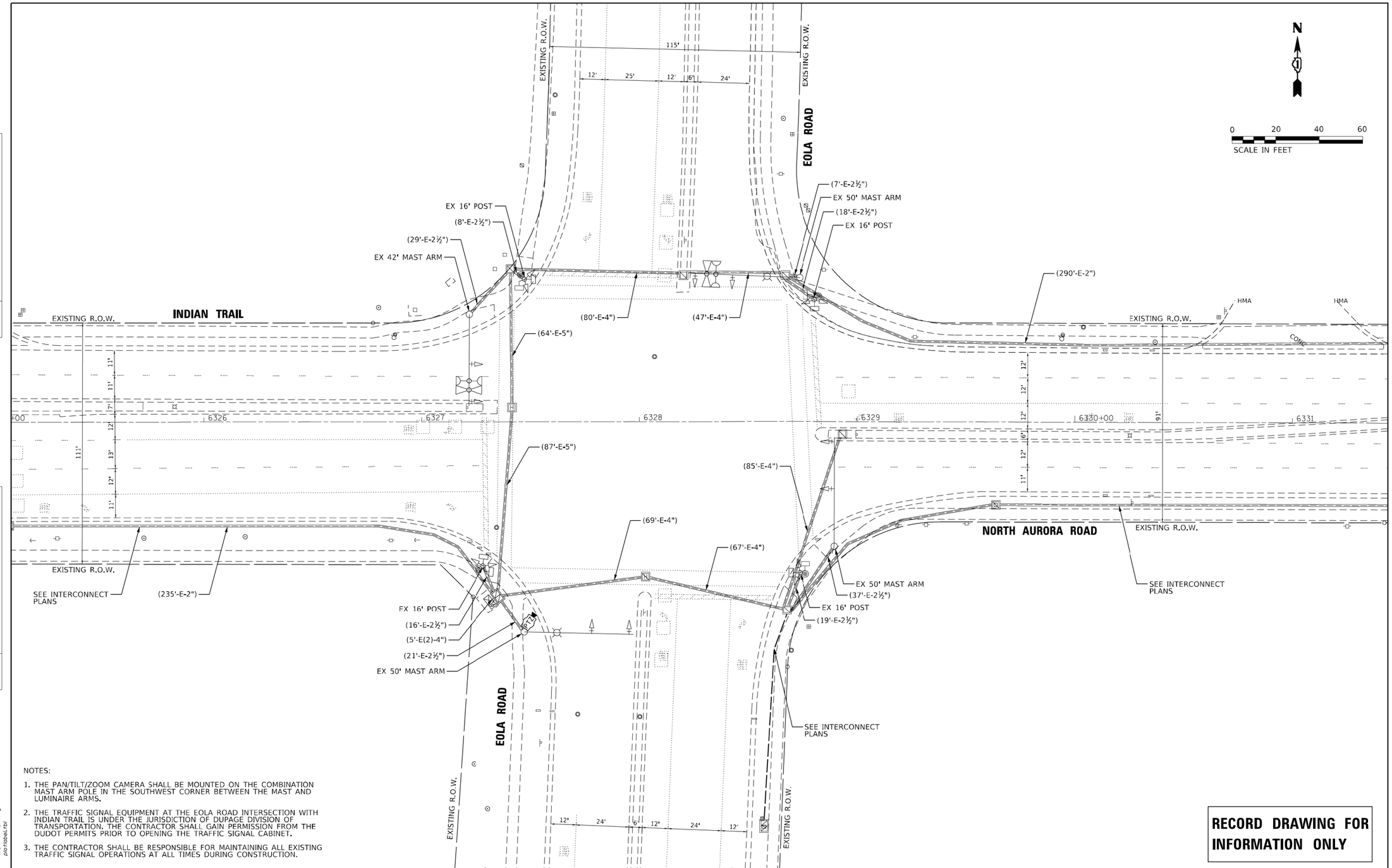


NOTES:

1. THE PAN/TILT/ZOOM CAMERA SHALL BE MOUNTED ON THE COMBINATION MAST ARM POLE IN THE SOUTHWEST CORNER BETWEEN THE MAST AND LUMINAIRE ARMS.
2. THE TRAFFIC SIGNAL EQUIPMENT AT THE EOLA ROAD INTERSECTION WITH INDIAN TRAIL IS UNDER THE JURISDICTION OF DUPAGE DIVISION OF TRANSPORTATION. THE CONTRACTOR SHALL GAIN PERMISSION FROM THE DUDOT PERMITS PRIOR TO OPENING THE TRAFFIC SIGNAL CABINET.
3. THE CONTRACTOR SHALL BE RESPONSIBLE FOR MAINTAINING ALL EXISTING TRAFFIC SIGNAL OPERATIONS AT ALL TIMES DURING CONSTRUCTION.

**RECORD DRAWING FOR INFORMATION ONLY**

| PLAN | BY | DATE |
|---|---|---|
| SURVEYED | | |
| PLOTTED | | |
| ALIGNMENT CHECKED | | |
| RT. OF WAY CHECKED | | |
| CADD FILE NAME | | |
| NOTE BOOK NO. | | |

| PLAN | BY | DATE |
|---|---|---|
| SURVEYED | | |
| PLOTTED | | |
| ALIGNMENT CHECKED | | |
| RT. OF WAY CHECKED | | |
| CADD FILE NAME | | |
| NOTE BOOK NO. | | |

| PROFILE | BY | DATE |
|---|---|---|
| SURVEYED | | |
| PLOTTED | | |
| GRADES CHECKED | | |
| B.M. NOTED | | |
| STRUCTURE NOTATNS CHKD | | |
| NOTE BOOK NO. | | |

| PROFILE | BY | DATE |
|---|---|---|
| SURVEYED | | |
| PLOTTED | | |
| GRADES CHECKED | | |
| B.M. NOTED | | |
| STRUCTURE NOTATNS CHKD | | |
| NOTE BOOK NO. | | |

HRG PROJECT NO.: 070690J5
HRG PROJ. CONTACT: 690JS_SIgDes_prop.dgn
FILE NAME: Eola_Indian.dgn
PLT. DATE: 6/7/2018
PEN TABLE: plotlabel.tbl

HRGreen.com
Illinois Professional Design Firm # 184-001322

| USER NAME = mfeller | DESIGNED - GF | REVISED - |
|---|---|---|
| | DRAWN - GF | REVISED - |
| PLOT SCALE = | CHECKED - MJF | REVISED - |
| PLOT DATE = 12/31/2018 | DATE - 10/3/2018 | REVISED - |

**STATE OF ILLINOIS**
**DEPARTMENT OF TRANSPORTATION**

**TRAFFIC SIGNAL MODERNIZATION PLAN**
**INDIAN TRAIL AND EOLA ROAD**

SCALE: | SHEET OF SHEETS | STA. TO STA.

| F.A.U RTE. | SECTION NO. | COUNTY | TOTAL SHEETS | SHEET NO. |
|---|---|---|---|---|
| 1503 | 18-00322-00-TL | KANE/DUPAGE | 44 | 29 |
| | | CONTRACT NO. 61F59 | | |
| FED. ROAD DIST. NO. | ILLINOIS | FED. AID PROJECT | | |

TRANSYSTEMS

| USER NAME = brvanderwal | DESIGNED - GR | REVISED - |
|---|---|---|
| | DRAWN - GR | REVISED - |
| PLOT SCALE = 40.0000 ' / in. | CHECKED - BVW | REVISED - |
| PLOT DATE = 1/25/2025 | DATE - 1/25/2025 | REVISED - |

**STATE OF ILLINOIS**
**DEPARTMENT OF TRANSPORTATION**

**NORTH AURORA ROAD**
**TRAFFIC SIGNAL RECORD DRAWING**
**INDIAN TRAIL AND EOLA ROAD**

SCALE: | SHEET 27 OF 32 SHEETS | STA. TO STA.

| F.A.U. RTE. | SECTION | COUNTY | TOTAL SHEETS | SHEET NO. |
|---|---|---|---|---|
| 1509 | 06-00133-00-BR | DuPAGE | 426 | 132 |
| | | CONTRACT NO. 61G79 | | |
| | ILLINOIS | FED. AID PROJECT | | |

FILE NAME = 060092-sht-TS6000

## EXISTING CONTROLLER SEQUENCE

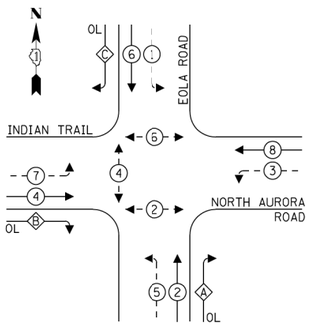


## LEGEND:

- PROTECTED PHASE
- PROTECTED/PERMITTED PHASE
- PEDESTRIAN PHASE
- OL OVERLAP

## RIGHT TURN OVERLAP PHASE DESIGNATION:

| OVERLAP LETTER | | PERMISSIVE PHASE | | PROTECTED PHASE |
|---|---|---|---|---|
| A | = | 2 | + | 3 |
| B | = | 4 | + | 5 |
| C | = | 6 | + | 7 |

## EXISTING EMERGENCY VEHICLE PREEMPTION SEQUENCE

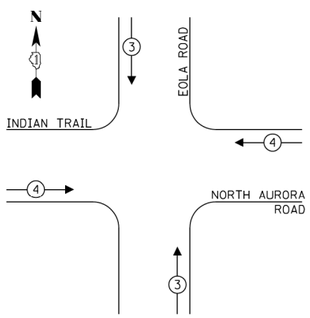


## TRAFFIC SIGNAL ELECTRICAL SERVICE REQUIREMENTS

| TYPE | NO. OF LAMPS | LED WATTAGE | % OPERATION | TOTAL WATTAGE |
|---|---|---|---|---|
| SIGNAL (RED) | 16 | 11 | 50 | 88.0 |
| (YELLOW) | 16 | 20 | 5 | 16.0 |
| (GREEN) | 16 | 12 | 45 | 86.4 |
| PERMISSIVE ARROW | 24 | 10 | 10 | 24.0 |
| PED. SIGNAL | 8 | 20 | 100 | 160.0 |
| CONTROLLER | 1 | 100 | 100 | 100.0 |
| UPS | 1 | 25 | 100 | 25.0 |
| VIDEO SYSTEM | - | 150 | 100 | - |
| BLANK-OUT SIGN | - | 25 | 5 | - |
| FLASHER | - | - | 50 | - |
| STREET NAME SIGN | - | 120 | 50 | - |
| LUMINAIRE | - | - | - | - |
| | | | TOTAL = | 499.4 |

ENERGY COSTS TO:

CITY OF AURORA
44 E DOWNER PLACE
AURORA, IL 60507

ENERGY SUPPLY: CONTACT: MARK SCHERIBEL
PHONE: (630) 723-2128
COMPANY: COMMONWEALTH EDISON
ACCOUNT NUMBER: ---

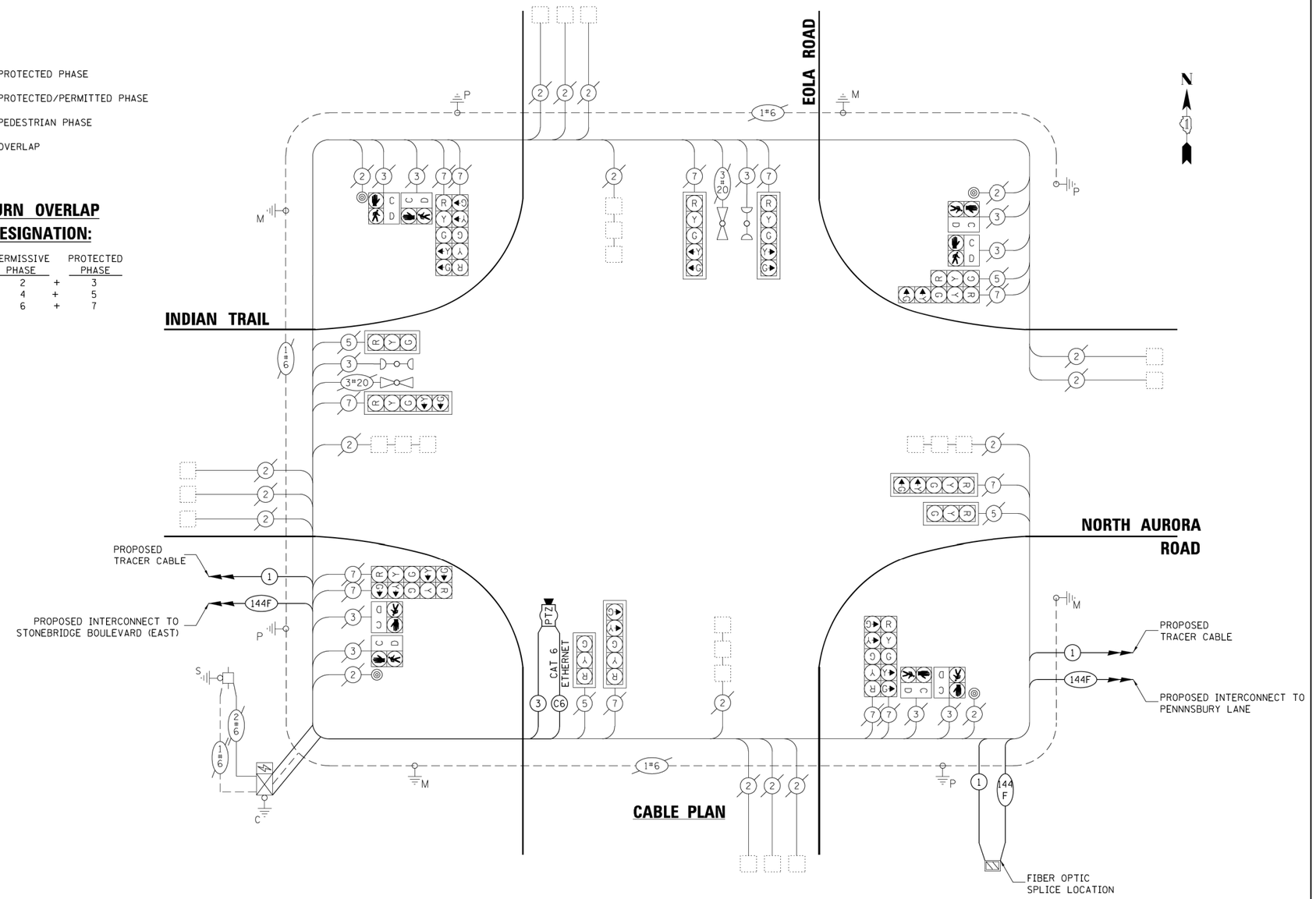


## CABLE PLAN

**RECORD DRAWING FOR INFORMATION ONLY**

HRG PROJECT NO.: 070630.05
HRG PROJ. CONTACT: GRD.JE, stp06c, ewsa.dgn
FILE NAME: E:\pw_work\pw_dwnt\
PLOT DRIVER: pio10pdf.tbl
PEN TABLE:

HRGreen.com
Illinois Professional Design Firm # 184-001322

| USER NAME = mfeller | DESIGNED - GF | REVISED - |
|---|---|---|
| | DRAWN - GF | REVISED - |
| PLOT SCALE = | CHECKED - MJF | REVISED - |
| PLOT DATE = 12/31/2018 | DATE - 10/3/2018 | REVISED - |

**STATE OF ILLINOIS**
**DEPARTMENT OF TRANSPORTATION**

**CABLE PLAN, PHASE DESIGNATION DIAGRAM, AND EMERGENCY VEHICLE PREEMPTION SEQUENCE**
**INDIAN TRAIL AND EOLA ROAD**

SCALE: | SHEET OF SHEETS | STA. TO STA.

| F.A.U RTE. | SECTION NO. | COUNTY | TOTAL SHEETS | SHEET NO. |
|---|---|---|---|---|
| 1503 | 18-00322-00-TL | KANE/DUPAGE | 44 | 30 |
| | | CONTRACT NO. 61F59 | | |
| FED. ROAD DIST. NO. | ILLINOIS | FED. AID PROJECT | | |

FILE NAME = 060092-sht-TS6000

TRANSYSTEMS

| USER NAME = brvanderwal | DESIGNED - GR | REVISED - |
|---|---|---|
| | DRAWN - GR | REVISED - |
| PLOT SCALE = 40.0000 ' / in. | CHECKED - BVW | REVISED - |
| PLOT DATE = 1/25/2025 | DATE - 1/25/2025 | REVISED - |

**STATE OF ILLINOIS**
**DEPARTMENT OF TRANSPORTATION**

**NORTH AURORA ROAD**
**TRAFFIC SIGNAL RECORD DRAWING**
**INDIAN TRAIL AND EOLA ROAD**

SCALE: | SHEET 28 OF 32 SHEETS | STA. TO STA.

| F.A.U. RTE. | SECTION | COUNTY | TOTAL SHEETS | SHEET NO. |
|---|---|---|---|---|
| 1509 | 06-00133-00-BR | DuPAGE | 426 | 133 |
| | | CONTRACT NO. 61G79 | | |
| | ILLINOIS | FED. AID PROJECT | | |

THE FOLLOWING EXISTING TRAFFIC SIGNAL EQUIPMENT SHALL BE REMOVED BY THE CONTRACTOR, SHALL BECOME THE PROPERTY OF THE CITY OF AURORA AND SHALL BE DELIVERED BY THE CONTRACTOR TO MR. BOB GREENE (630-256-3200) ALONG WITH FIVE (5) COPIES OF A LIST OF EQUIPMENT THAT IS TO REMAIN THE PROPERTY OF THE CITY IN ACCORDANCE WITH THE TRAFFIC SIGNAL SPECIFICATIONS. THIS WORK SHALL BE INCLUDED IN THE CONTRACT UNIT PRICE FOR REMOVE EXISTING TRAFFIC SIGNAL EQUIPMENT (SEE SCHEDULE OF QUANTITIES FOR REMOVAL ITEMS TO BE PAID FOR SEPARATELY).

| | | |
|---|---|---|
| 6 | EACH | PEDESTRIAN SIGNAL HEADS |
| 4 | EACH | PEDESTRIAN PUSH BUTTONS |

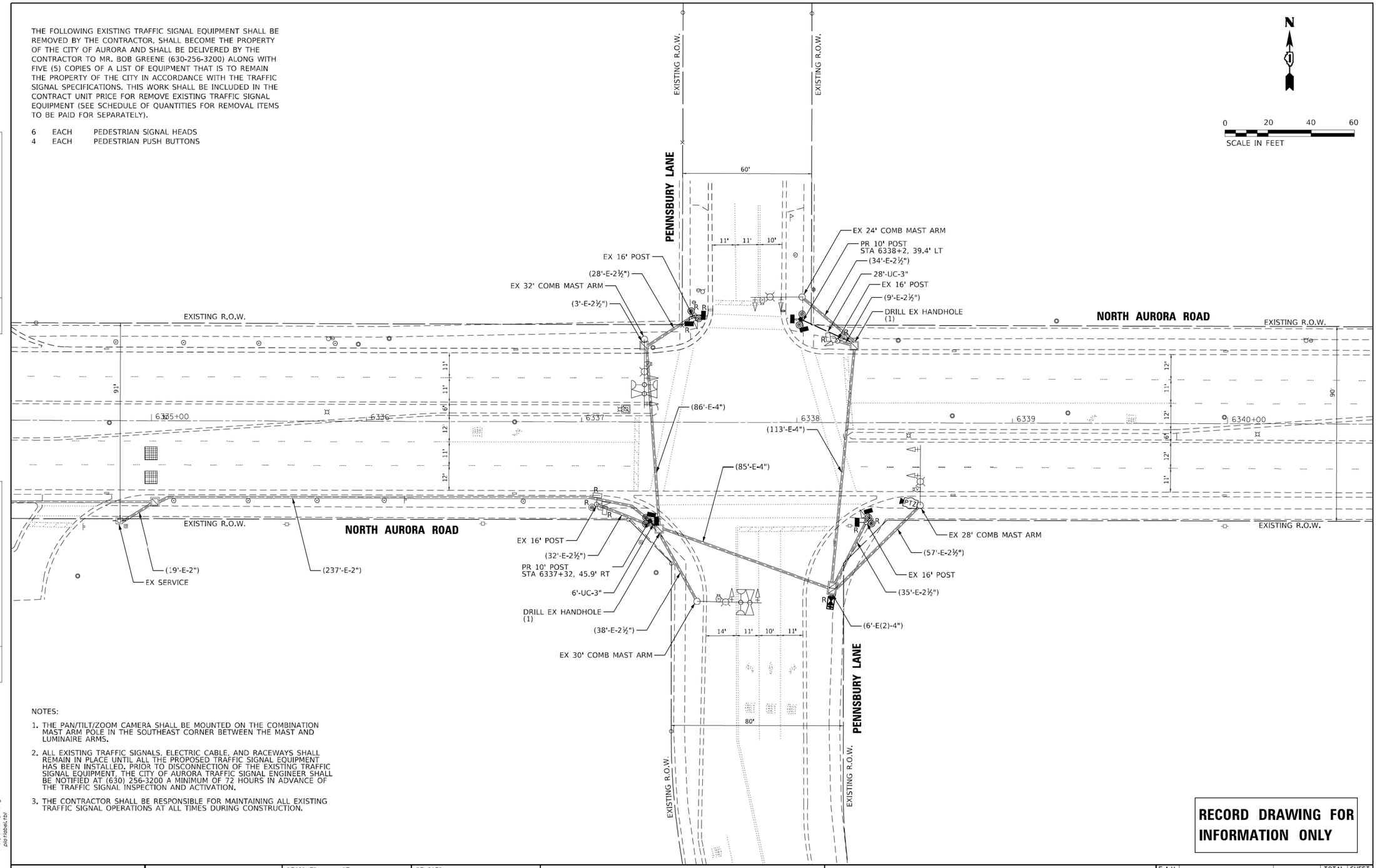


NOTES:

1. THE PAN/TILT/ZOOM CAMERA SHALL BE MOUNTED ON THE COMBINATION MAST ARM POLE IN THE SOUTHEAST CORNER BETWEEN THE MAST AND LUMINAIRE ARMS.
2. ALL EXISTING TRAFFIC SIGNALS, ELECTRIC CABLE, AND RACEWAYS SHALL REMAIN IN PLACE UNTIL ALL THE PROPOSED TRAFFIC SIGNAL EQUIPMENT HAS BEEN INSTALLED. PRIOR TO DISCONNECTION OF THE EXISTING TRAFFIC SIGNAL EQUIPMENT, THE CITY OF AURORA TRAFFIC SIGNAL ENGINEER SHALL BE NOTIFIED AT (630) 256-3200 A MINIMUM OF 72 HOURS IN ADVANCE OF THE TRAFFIC SIGNAL INSPECTION AND ACTIVATION.
3. THE CONTRACTOR SHALL BE RESPONSIBLE FOR MAINTAINING ALL EXISTING TRAFFIC SIGNAL OPERATIONS AT ALL TIMES DURING CONSTRUCTION.

**RECORD DRAWING FOR INFORMATION ONLY**

HRG PROJECT NO.: 070690J5
HRG PROJ. CONTACT: 6.50J5_dgn7z_pens.dgn
FILE NAME: 6.dcf_Overlay.dcfg
PLOT DRIVER: pltotabl.tbl
PEN TABLE:

HRGreen.com
Illinois Professional Design Firm # 184-001322

| | | | |
|---|---|---|---|
| USER NAME = mfeller | DESIGNED - GF | REVISED - | |
| | DRAWN - GF | REVISED - | |
| PLOT SCALE = | CHECKED - MJF | REVISED - | |
| PLOT DATE = 12/31/2018 | DATE - 10/3/2018 | REVISED - | |

**STATE OF ILLINOIS**
**DEPARTMENT OF TRANSPORTATION**

**TRAFFIC SIGNAL MODERNIZATION PLAN**
**NORTH AURORA ROAD AND PENNSBURY LANE**

SCALE: SHEET OF SHEETS STA. TO STA.

| F.A.U RTE. | SECTION NO. | COUNTY | TOTAL SHEETS | SHEET NO. |
|---|---|---|---|---|
| 1503 | 18-00322-00-TL | KANE/DUPAGE | 44 | 32 |
| | | CONTRACT NO. 61F59 | | |

FED. ROAD DIST. NO. ILLINOIS FED. AID PROJECT

TRANSYSTEMS

| | | | |
|---|---|---|---|
| USER NAME = brvanderwal | DESIGNED - GR | REVISED - | |
| | DRAWN - GR | REVISED - | |
| PLOT SCALE = 40.0000 ' / in. | CHECKED - BVW | REVISED - | |
| PLOT DATE = 1/25/2025 | DATE - 1/25/2025 | REVISED - | |

**STATE OF ILLINOIS**
**DEPARTMENT OF TRANSPORTATION**

**NORTH AURORA ROAD**
**TRAFFIC SIGNAL RECORD DRAWING**
**INDIAN TRAIL AND EOLA ROAD**

SCALE: SHEET 29 OF 32 SHEETS STA. TO STA.

| F.A.U. RTE. | SECTION | COUNTY | TOTAL SHEETS | SHEET NO. |
|---|---|---|---|---|
| 1509 | 06-00133-00-BR | DuPAGE | 426 | 134 |
| | | CONTRACT NO. 61G79 | | |

ILLINOIS FED. AID PROJECT

FILE NAME = 060092-sht-TS6000

| PLAN | BY | DATE |
|---|---|---|
| SURVEYED | | |
| PLOTTED | | |
| ALIGNMENT CHECKED | | |
| RT. OF WAY CHECKED | | |
| CADD FILE NAME | | |
| NOTE BOOK NO. | | |

| PLAN | BY | DATE |
|---|---|---|
| SURVEYED | | |
| PLOTTED | | |
| ALIGNMENT CHECKED | | |
| RT. OF WAY CHECKED | | |
| CADD FILE NAME | | |
| NOTE BOOK NO. | | |

| PROFILE | BY | DATE |
|---|---|---|
| SURVEYED | | |
| PLOTTED | | |
| GRADES CHECKED | | |
| B.M. NOTED | | |
| STRUCTURE NOTAT'NS CHKD | | |
| NOTE BOOK NO. | | |

| PROFILE | BY | DATE |
|---|---|---|
| SURVEYED | | |
| PLOTTED | | |
| GRADES CHECKED | | |
| B.M. NOTED | | |
| STRUCTURE NOTAT'NS CHKD | | |
| NOTE BOOK NO. | | |

## EXISTING CONTROLLER SEQUENCE

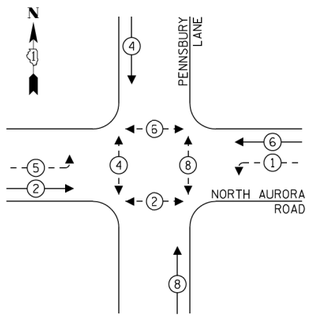


## LEGEND:

- PROTECTED PHASE
- PROTECTED/PERMITTED PHASE
- PEDESTRIAN PHASE
- OL OVERLAP

## EXISTING EMERGENCY VEHICLE PREEMPTION SEQUENCE

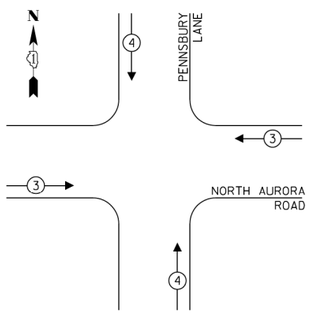


## TRAFFIC SIGNAL ELECTRICAL SERVICE REQUIREMENTS

| TYPE | NO. OF LAMPS | LED WATTAGE | % OPERATION | TOTAL WATTAGE |
|---|---|---|---|---|
| SIGNAL (RED) | 12 | 11 | 50 | 66.0 |
| (YELLOW) | 12 | 20 | 5 | 12.0 |
| (GREEN) | 12 | 12 | 45 | 64.8 |
| ARROW | 8 | 10 | 10 | 8.0 |
| PED. SIGNAL | 7 | 20 | 100 | 140.0 |
| CONTROLLER | 1 | 100 | 100 | 100.0 |
| UPS | 1 | 25 | 100 | 25.0 |
| VIDEO SYSTEM | 1 | 150 | 100 | 150.0 |
| BLANK-OUT SIGN | - | 25 | 5 | - |
| FLASHER | - | - | 50 | - |
| STREET NAME SIGN | - | 120 | 50 | - |
| LUMINAIRE | - | - | - | - |
| | | | TOTAL = | 565.8 |

ENERGY COSTS TO:

CITY OF AURORA
44 E DOWNER PLACE
AURORA, IL 60507

ENERGY SUPPLY: CONTACT: MARK SCHERIBEL
PHONE: (630) 723-2128
COMPANY: COMMONWEALTH EDISON
ACCOUNT NUMBER: ---

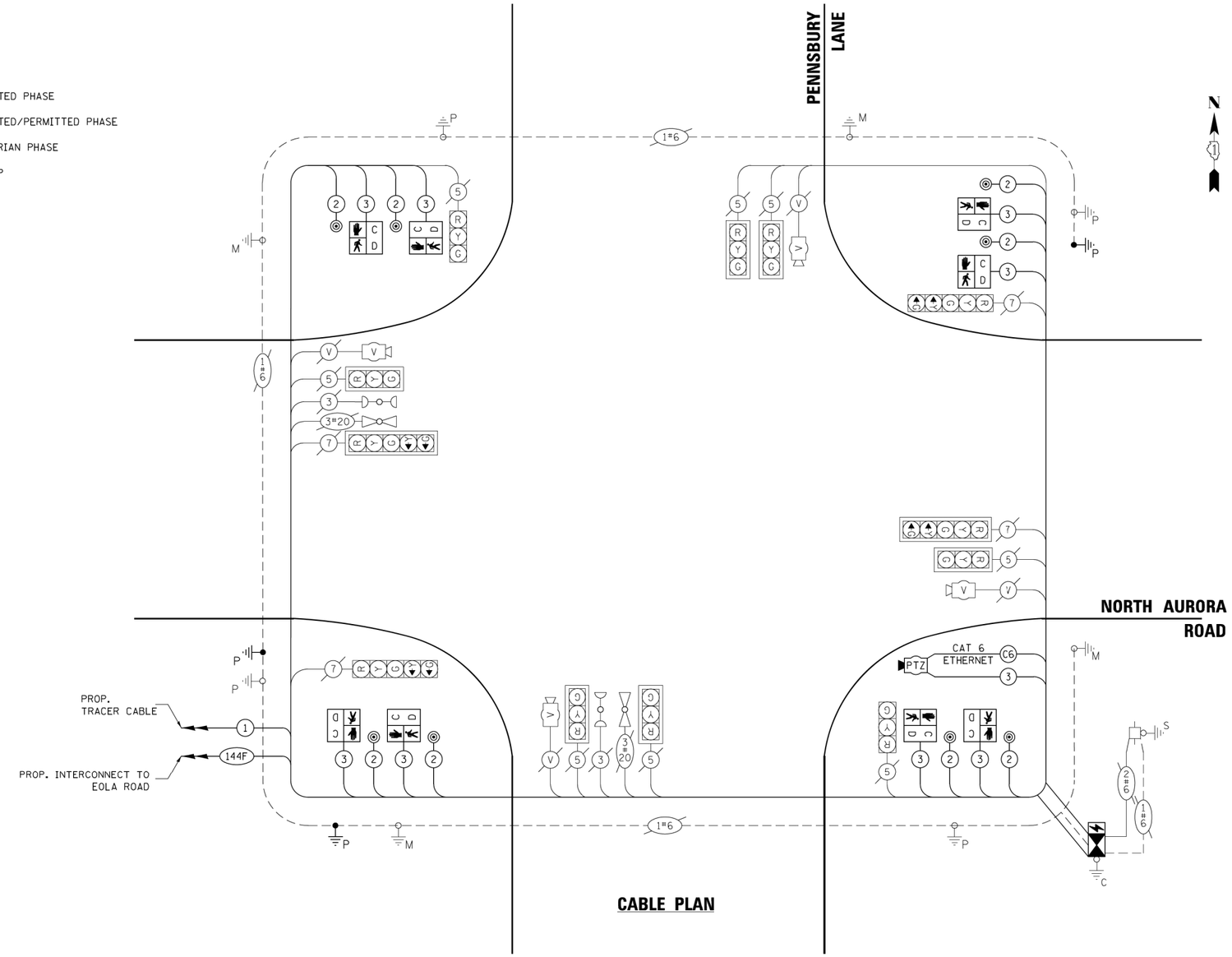


## CABLE PLAN

**RECORD DRAWING FOR INFORMATION ONLY**

| PLAN | BY | DATE |
|---|---|---|
| SURVEYED | | |
| PLOTTED | | |
| ALIGNMENT CHECKED | | |
| RT. OF WAY CHECKED | | |
| CADD FILE NAME | | |
| NOTE BOOK NO. | | |

| PLAN | BY | DATE |
|---|---|---|
| SURVEYED | | |
| PLOTTED | | |
| ALIGNMENT CHECKED | | |
| R/S INVENTORIED | | |
| CADD FILE NAME | | |
| NOTE BOOK NO. | | |

| PROFILE | BY | DATE |
|---|---|---|
| SURVEYED | | |
| PLOTTED | | |
| GRADES CHECKED | | |
| B.M. NOTED | | |
| STRUCTURE NOTAT'NS CH'KD | | |
| NOTE BOOK NO. | | |

| PROFILE | BY | DATE |
|---|---|---|
| SURVEYED | | |
| PLOTTED | | |
| GRADES CHECKED | | |
| B.M. NOTED | | |
| STRUCTURE NOTAT'NS CH'KD | | |
| NOTE BOOK NO. | | |

HRG PROJECT NO.: 070690J5
HRG PROJ. CONTACT: 690J5_elg07a_pens.dgn
FILE NAME: E:\pw_work\
PLOT DATE: 6/7/2018
PEN TABLE: plotlabel.tbl

FILE NAME = 0608092-sht-TS6000

HRGreen.com
Illinois Professional Design Firm # 184-001322
HRGreen

| USER NAME = mfeller | DESIGNED - GF | REVISED - |
|---|---|---|
| | DRAWN - GF | REVISED - |
| PLOT SCALE = | CHECKED - MJF | REVISED - |
| PLOT DATE = 12/31/2018 | DATE - 10/3/2018 | REVISED - |

**STATE OF ILLINOIS**
**DEPARTMENT OF TRANSPORTATION**

**CABLE PLAN, PHASE DESIGNATION DIAGRAM, AND EMERGENCY VEHICLE PREEMPTION SEQUENCE**
**NORTH AURORA ROAD AND PENNSBURY LANE**

SCALE: | SHEET OF SHEETS | STA. TO STA.

| F.A.U RTE. | SECTION NO. | COUNTY | TOTAL SHEETS | SHEET NO. |
|---|---|---|---|---|
| 1503 | 18-00322-00-TL | KANE/DUPAGE | 44 | 33 |
| | | CONTRACT NO. 61F59 | | |

FED. ROAD DIST. NO. | ILLINOIS | FED. AID PROJECT

TRANSYSTEMS

| USER NAME = brvanderwal | DESIGNED - GR | REVISED - |
|---|---|---|
| | DRAWN - GR | REVISED - |
| PLOT SCALE = 40.0000 ' / in. | CHECKED - BVW | REVISED - |
| PLOT DATE = 1/25/2025 | DATE - 1/25/2025 | REVISED - |

**STATE OF ILLINOIS**
**DEPARTMENT OF TRANSPORTATION**

**NORTH AURORA ROAD**
**TRAFFIC SIGNAL RECORD DRAWING**
**INDIAN TRAIL AND EOLA ROAD**

SCALE: | SHEET 30 OF 32 SHEETS | STA. TO STA.

| F.A.U. RTE. | SECTION | COUNTY | TOTAL SHEETS | SHEET NO. |
|---|---|---|---|---|
| 1509 | 06-00133-00-BR | DuPAGE | 426 | 135 |
| | | CONTRACT NO. 61G79 | | |

ILLINOIS | FED. AID PROJECT

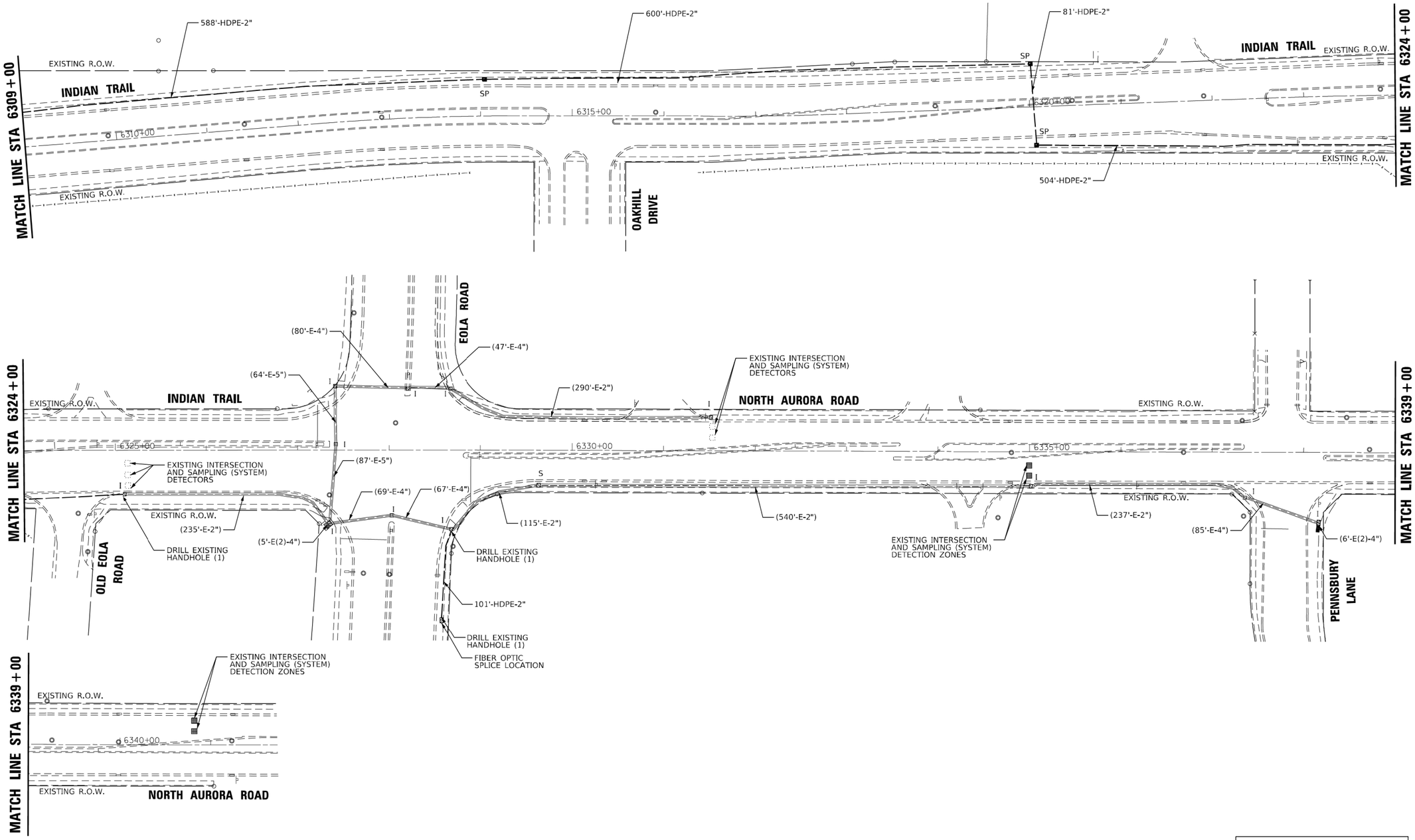


**RECORD DRAWING FOR INFORMATION ONLY**

HRG PROJECT NO.: 0706390J5
HRG PROJ. CONTACT: EGOLJE, ALEX
FILE NAME: e:\pdf_files\17\cfg
PLOT TABLE: plotlabel.tbl
PEN TABLE:

HRGreen.com
Illinois Professional Design Firm # 184-001322

| | | | |
|---|---|---|---|
| USER NAME = mfeller | DESIGNED - GF | REVISED - | |
| | DRAWN - GF | REVISED - | |
| PLOT SCALE = | CHECKED - MJF | REVISED - | |
| PLOT DATE = 12/31/2018 | DATE - 10/3/2018 | REVISED - | |

**STATE OF ILLINOIS**
**DEPARTMENT OF TRANSPORTATION**

**PROPOSED INTERCONNECT PLAN (SHEET 7 OF 7)**
**INDIAN TRAIL**
**IL 25 TO PENNSBURY LANE**

SCALE: | SHEET OF SHEETS | STA. TO STA.

| F.A.U RTE. | SECTION NO. | COUNTY | TOTAL SHEETS | SHEET NO. |
|---|---|---|---|---|
| 1503 | 18-00322-00-TL | KANE/DUPAGE | 44 | 41 |
| | | CONTRACT NO. 61F59 | | |

FED. ROAD DIST. NO. | ILLINOIS | FED. AID PROJECT

TRANSYSTEMS

| | | | |
|---|---|---|---|
| USER NAME = brvanderwal | DESIGNED - GR | REVISED - | |
| | DRAWN - GR | REVISED - | |
| PLOT SCALE = 40.0000 ' / in. | CHECKED - BVW | REVISED - | |
| PLOT DATE = 1/25/2025 | DATE - 1/25/2025 | REVISED - | |

**STATE OF ILLINOIS**
**DEPARTMENT OF TRANSPORTATION**

**NORTH AURORA ROAD**
**TRAFFIC SIGNAL RECORD DRAWING**
**INDIAN TRAIL AND EOLA ROAD**

SCALE: | SHEET 31 OF 32 SHEETS | STA. TO STA.

| F.A.U. RTE. | SECTION | COUNTY | TOTAL SHEETS | SHEET NO. |
|---|---|---|---|---|
| 1509 | 06-00133-00-BR | DuPAGE | 426 | 136 |
| | | CONTRACT NO. 61G79 | | |

ILLINOIS | FED. AID PROJECT

FILE NAME = 0608932-sht-TS60000

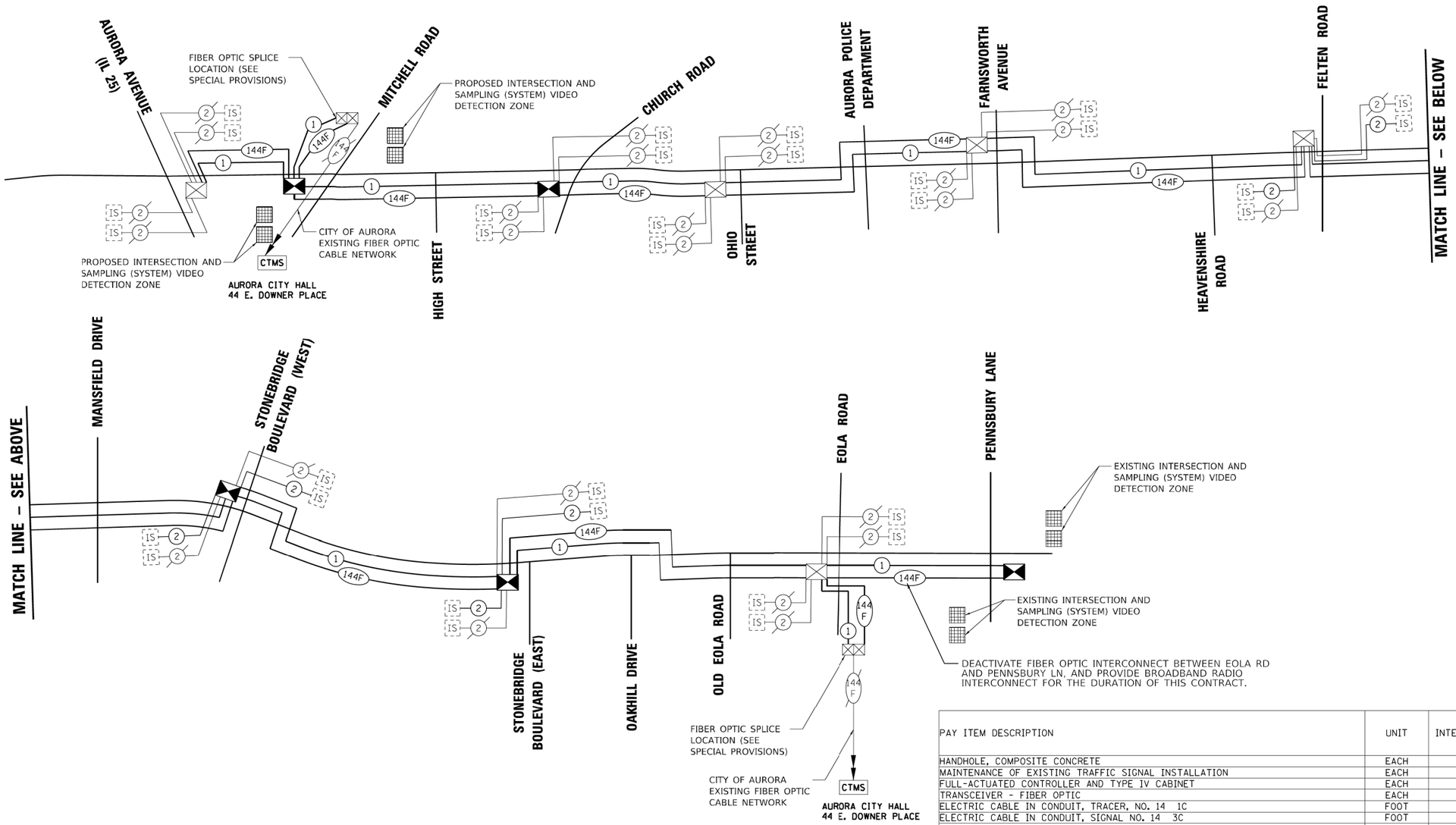


| PAY ITEM DESCRIPTION | UNIT | INTERCONNECT |
|---|---|---|
| HANDHOLE, COMPOSITE CONCRETE | EACH | 8 |
| MAINTENANCE OF EXISTING TRAFFIC SIGNAL INSTALLATION | EACH | 3 |
| FULL-ACTUATED CONTROLLER AND TYPE IV CABINET | EACH | 1 |
| TRANSCEIVER - FIBER OPTIC | EACH | 10 |
| ELECTRIC CABLE IN CONDUIT, TRACER, NO. 14 1C | FOOT | 23052 |
| ELECTRIC CABLE IN CONDUIT, SIGNAL NO. 14 3C | FOOT | 205 |
| DRILL EXISTING HANDHOLE | EACH | 7 |
| MODIFY EXISTING CONTROLLER CABINET | EACH | 2 |
| REMOVE EXISTING TRAFFIC SIGNAL EQUIPMENT | EACH | 1 |
| MODIFY EXISTING TYPE "D" FOUNDATION | EACH | 1 |
| FIBER OPTIC CABLE SPLICE | EACH | 2 |
| ETHERNET SWITCH | EACH | 3 |
| CAT. 6 ETHERNET CABLE | FOOT | 205 |
| FIBER OPTIC CABLE, MICRO, 144 FIBERS, SINGLE MODE | FOOT | 23052 |
| UNINTERRUPTABLE POWER SUPPLY, SPECIAL | EACH | 1 |
| INTERSECTION VIDEO TRAFFIC MONITORING SYSTEM WITH PTZ CAMERA | EACH | 3 |
| CENTRALIZED SYSTEM FIELD INTEGRATION / SETUP | L SUM | 1 |
| CONDUIT SPECIAL | FOOT | 5272 |
| OPTIMIZE TRAFFIC SIGNAL SYSTEM | EACH | 1 |

**RECORD DRAWING FOR INFORMATION ONLY**

| PLAN | BY | DATE |
|---|---|---|
| SURVEYED | | |
| PLOTTED | | |
| ALIGNMENT CHECKED | | |
| RT. OF WAY CHECKED | | |
| CADD FILE NAME | | |
| NOTE BOOK NO. | | |

| PLAN | BY | DATE |
|---|---|---|
| SURVEYED | | |
| PLOTTED | | |
| ALIGNMENT CHECKED | | |
| R/W DIM. NOTED | | |
| CADD FILE NAME | | |
| NOTE BOOK NO. | | |

| PROFILE | BY | DATE |
|---|---|---|
| SURVEYED | | |
| PLOTTED | | |
| GRADES CHECKED | | |
| BM. NOTED | | |
| STRUCTURE NOTAT'NS CHK'D | | |
| NOTE BOOK NO. | | |

| PROFILE | BY | DATE |
|---|---|---|
| SURVEYED | | |
| PLOTTED | | |
| GRADES CHECKED | | |
| BM. NOTED | | |
| STRUCTURE NOTAT'NS CHK'D | | |
| NOTE BOOK NO. | | |

HRG PROJECT NO.: 070690.05
HRG PROJ. CONTACT: EDDIE VANWINKLE
FILE NAME: 6G02S_sig Int_schem01.dgn
PLOT SCALE: 6.00ft / in.
PLOT DRIVER: pltPDF.pltcfg
PEN TABLE: pltlabel.tbl

HRGreen
HRGreen.com
Illinois Professional Design Firm # 184-001322

| | | | |
|---|---|---|---|
| USER NAME = mfeller | DESIGNED - GF | REVISED - | |
| | DRAWN - GF | REVISED - | |
| PLOT SCALE = | CHECKED - MJF | REVISED - | |
| PLOT DATE = 12/31/2018 | DATE - 10/3/2018 | REVISED - | |

**STATE OF ILLINOIS**
**DEPARTMENT OF TRANSPORTATION**

**PROPOSED INTERCONNECT SCHEMATIC AND SCHEDULE OF QUANTITIES**
**INDIAN TRAIL**
**IL 25 TO PENNSBURY LANE**

SCALE: | SHEET OF SHEETS | STA. TO STA.

| F.A.U. RTE. | SECTION NO. | COUNTY | TOTAL SHEETS | SHEET NO. |
|---|---|---|---|---|
| 1503 | 18-00322-00-TL | KANE/DUPAGE | 44 | 42 |
| | | CONTRACT NO. 61F59 | | |
| FED. ROAD DIST. NO. | ILLINOIS | FED. AID PROJECT | | |

FILE NAME = 060092-sht-TS6000

TRANSYSTEMS

| | | | |
|---|---|---|---|
| USER NAME = brvanderwal | DESIGNED - GR | REVISED - | |
| | DRAWN - GR | REVISED - | |
| PLOT SCALE = 40.0000 ' / in. | CHECKED - BVW | REVISED - | |
| PLOT DATE = 1/25/2025 | DATE - 1/25/2025 | REVISED - | |

**STATE OF ILLINOIS**
**DEPARTMENT OF TRANSPORTATION**

**NORTH AURORA ROAD**
**TRAFFIC SIGNAL RECORD DRAWING**
**INDIAN TRAIL AND EOLA ROAD**

SCALE: | SHEET 32 OF 32 SHEETS | STA. TO STA.

| F.A.U. RTE. | SECTION | COUNTY | TOTAL SHEETS | SHEET NO. |
|---|---|---|---|---|
| 1509 | 06-00133-00-BR | DuPAGE | 426 | 137 |
| | | CONTRACT NO. 61G79 | | |
| | ILLINOIS | FED. AID PROJECT | | |

## SYMBOL LIST

- EXISTING COMBINATION LIGHTING - TRAFFIC SIGNAL POLE
- EXISTING LIGHT POLE TO REMAIN
- RR — EXISTING AURORA LIGHTING UNIT TO BE REMOVED AND REINSTALLED AT DIFFERENT LOCATION
- ETR — EXISTING AURORA LIGHTING UNIT REINSTALLED ON CONCRETE FOUNDATION WITH PROPOSED LUMINAIRE, LED HORIZONTAL MOUNT, OUTPUT DESIGNATION H
- PROPOSED NAPERVILLE LIGHTING UNIT, ON HELIX FOUNDATION, ALUMINUM, 40' M.H., 12' M.A. AND LUMINAIRE, LED, HORIZONTAL MOUNT,OUTPUT DESIGNATION G
- P — PROPOSED AURORA LIGHTING UNIT, ON CONCRETE FOUNDATION, 40' M.H., TWIN 12' M.A. AND LUMINAIRES, LED HORIZONTAL MOUNT, OUTPUT DESIGNATION H
- P30 — PROPOSED AURORA LIGHTING UNIT, ON CONCRETE FOUNDATION, 30' M.H., TWIN 12' M.A. AND LUMINAIRES, LED HORIZONTAL MOUNT, OUTPUT DESIGNATION H
- P30 — PROPOSED AURORA LIGHTING UNIT, ON CONCRETE FOUNDATION, 30' M.H., 12' M.A. AND LUMINAIRE, LED HORIZONTAL MOUNT, OUTPUT DESIGNATION H
- PROPOSED UNDERPASS LUMINAIRE, LED, OUTPUT DESIGNATION C, WALL MOUNTED
- EXISTING LIGHTING CONTROLLER
- PROPOSED LIGHTING CONTROLLER, BASE MOUNTED, 240 VOLT, 100 AMP
- J — PROPOSED LIGHTING JUNCTION BOX. TYPE AND SIZE AS NOTED
- EXISTING UTILITY POLE
- EXISTING UTILITY POLE AND LIGHTING LUMINAIRE TO REMAIN IN OPERATION DURING CONSTRUCTION
- GROUND ROD
- P — UTILITY PEDESTAL (NED INSTALL)
- UTILITY TRANSFORMER POLE MOUNTED
- UNIT DUCT. NO. AND SIZE OF WIRES AS NOTED ON PLANS
- UNIT DUCT (EMPTY)
- WIRING IN CONDUIT ATTACHED
- RGC UNDERGROUND CONDUIT
- EXISTING HANDHOLE
- PROPOSED HANDHOLE
- CONTROL CABINET
- CIRCUITRY
- POLE NUMBER

X A 12
X B 12

## ABBREVIATIONS

| | |
|---|---|
| A | AMPS |
| DIA | DIAMETER |
| C | CONDUIT |
| EOP | EDGE OF PAVEMENT |
| GND | GROUND |
| FT | FEET |
| HPS | HIGH PRESSURE SODIUM |
| IDOT | ILLINOIS DEPARTMENT OF TRASPORTATION |
| LED | LIGHT EMITTING DIODE |
| LT | LEFT |
| MC | MEDIUM CUTOFF |
| NED | NAPERVILE ELECTRIC DEPARTMENT |
| P | PUSHED |
| PC | PHOTO CONTROL |
| PH | PHASE |
| PVC | POLYVINYL CHLORIDE |
| RT | RIGHT |
| RGSC | RIGID GALVANIZED STEEL CONDUIT |
| STA | STATION |
| UNO | UNLESS NOTED OTHERWISE |
| V | VOLTS |
| W | WATTS |

## BILL OF MATERIALS

| | | |
|---|---|---|
| ELECTRIC SERVICE INSTALLATION | EACH | 1 |
| ELECTRIC UTILITY SERVICE CONNECTION | L SUM | 1 |
| UNDERGROUND CONDUIT, GALVANIZED STEEL, 2 1/2" DIA. | FOOT | 140 |
| UNDERGROUND CONDUIT, GALVANIZED STEEL, 4" DIA. | FOOT | 265 |
| CONDUIT ATTACHED TO STRUCTURE, 3/4" DIA., PVC COATED GALVANIZED STEEL | FOOT | 80 |
| CONDUIT ATTACHED TO STRUCTURE, 3" DIA., PVC COATED GALVANIZED STEEL | FOOT | 40 |
| JUNCTION BOX, STAINLESS STEEL, ATTACHED TO STRUCTURE, 6" X 6" X 4" | EACH | 6 |
| JUNCTION BOX, STAINLESS STEEL, ATTACHED TO STRUCTURE, 12" X 12" X 8" | EACH | 2 |
| HANDHOLE | EACH | 3 |
| UNIT DUCT, 600V, 3-1C NO.6, 1/C NO.6 GROUND, (XLP-TYPE USE), 1 1/4" DIA. POLYETHYLENE | FOOT | 2,170 |
| UNIT DUCT, 600V, 4-1C NO.4, 1/C NO.6 GROUND, (XLP-TYPE USE), 1 1/2" DIA. POLYETHYLENE | FOOT | 1,050 |
| ELECTRIC CABLE IN CONDUIT, 600V (XLP-TYPE USE) 3-1/C NO. 2 | FOOT | 250 |
| AERIAL CABLE, 2-1/C NO. 6 WITH MESSENGER WIRE | FOOT | 1,947 |
| LUMINAIRE, LED, ROADWAY, OUTPUT DESIGNATION G | EACH | 6 |
| LUMINAIRE, LED, ROADWAY, OUTPUT DESIGNATION H | EACH | 18 |
| LUMINAIRE, LED, UNDERPASS, WALLMOUNT, OUTPUT DESIGNATION C | EACH | 6 |
| LIGHTING CONTROLLER, BASE MOUNTED, 240VOLT, 100AMP | EACH | 2 |
| LIGHT POLE, ALUMINUM, 40 FT. M.H., 12 FT. MAST ARM | EACH | 6 |
| LIGHT POLE, WOOD, 50 FOOT, CLASS 4, WITH 12FT MAST ARM | EACH | 10 |
| LIGHT POLE, WEATHERING STEEL, 30 FT. M.H., 12 FT. MAST ARM | EACH | 2 |
| LIGHT POLE, WEATHERING STEEL, 30 FT. M.H., 12 FT. MAST ARM-TWIN | EACH | 1 |
| LIGHT POLE, WEATHERING STEEL, 40 FT. M.H., 12 FT. MAST ARM - TWIN | EACH | 5 |
| LIGHT POLE FOUNDATION, 24" DIAMETER | FOOT | 76 |
| BREAKAWAY DEVICE, TRANSFORMER BASE, 11.5 INCH BOLT CIRCLE | EACH | 10 |
| REMOVAL OF POLE FOUNDATION | EACH | 3 |
| RELOCATE EXISTING LIGHTING UNIT | EACH | 3 |
| DRILL EXISTING HANDHOLE | EACH | 2 |
| HELIX FOUNDATION AND BREAKAWAY DEVICE | EACH | 6 |
| MAINTENANCE OF LIGHTING SYSTEM | CAL MO | 28 |
| WOOD POLE, 35 FT, CLASS 4 | EACH | 2 |
| LIGHT POLE FOUNDATION, 24" DIAMETER, OFFSET | FOOT | 11 |
| LUMINAIRE SAFETY CABLE ASSEMBLY | EACH | 25 |

## GENERAL NOTES

1. SPLICING OF CONDUCTORS SHALL BE IN POLE BASES OR WEATHER TIGHT JUNCTION BOXES ONLY. SPLICES BELOW GRADE WILL NOT BE PERMITTED.
2. LIGHTING CIRCUITS SHALL BE WIRED IN ACCORDANCE WITH THE PLANS. DEVIATIONS WILL NOT BE PERMITTED WITHOUT PRIOR APPROVAL OF THE ENGINEER.
3. THE CONTRACTOR SHALL REQUEST A FORMAL MAINTENANCE TRANSFER FOR NAPERVILLE MAINTAINED LIGHTING BEFORE ANY WORK BEGINS. THE CONTRACTOR SHALL CONTACT THE CITY OF NAPERVILLE, DEPARTMENT OF PUBLIC WORKS AT 630-420-6187 AND/OR AURORA UTILITIES PRIOR TO ANY WORK.
4. THE CONTRACTOR SHALL TAKE ALL NECESSARY MEASURES TO RESTORE ANY SPECIALIZED LADSCAPING (DECORATIVE ROCKS, PLANTS, ETC.).
5. ALL WORK SHALL CONFORM TO THE LATEST IDOT DISTRICT ONE STANDARDS, SPECIAL PROVISIONS, SUPPLEMENTAL SPECIFICATIONS, THE NATIONAL ELECTRICAL CODE, AND THE NATIONAL ELECTRICAL SAFETY CODE.
6. ALL ELECTRICAL EQUIPMENT SHALL BE UL LISTED AND LABELED.
7. ALL CONDUITS SHALL BE SEALED.
8. ALL CIRCUIT WIRES SHALL BE LABELED WITH CIRCUIT IDENTIFICATION.
9. CIRCUITS SHALL BE TESTED PER SPECIFICATIONS.
10. THE LOCATIONS OF ALL PROPOSED EQUIPMENT ARE ILLUSTRATED DIAGRAMMATICALLY. THE ACTUAL LOCATION IN THE FIELD SHALL MEET THE APPROVAL OF THE ENGINEER.
11. ALL MEASUREMENTS ARE APPROXIMATE. THE CONTRACTOR SHALL VERIFY MEASUREMENTS IN THE FIELD.
12. IT SHALL BE THE RESPONSIBILITY OF THE CONTRACTOR TO VERIFY THE EXISTING INSTALLATIONS AND DATA PRIOR TO BIDDING.
13. THE CONTRACTOR MUST MAINTAIN SAFE EQUIPMENT AND WORKING CLEARENCES FROM THE EXISTING COMED/NED OVERHEAD ELECTRIC LINES. THE CONTRACTOR SHALL PLAN HIS WORK CONSIDERING ELECTRIC LINES ARE TO BE IN SERVICE AND ENERGIZED THROUGHOUT THE CONSTRUCTION PERIOD.
14. THE CONTRACTOR SHALL REMOVE CABLES FROM ALL EXISTING UNIT DUCTS. EXISTING UNIT DUCTS SHALL BE ABANDONED IN PLACE.
15. THE COST OF SPLICING TEMPORARY CONDUCTORS TO EXISTING CONDUCTORS IN EXISTING POLES SHALL BE INCLUDED IN THE COST OF THE PAY ITEM FOR UNIT DUCT.
16. GROUNDING CONDUCTORS SHALL BE CONTINUOUS.
17. ALL NEW UNIT DUCTS AND CONDUITS SHALL BE PLACED A MINIMUM OF 30" BENEATH THE GROUND SURFACE (FINAL GRADE).
18. ALL EMPTY HDPE CONDUIT SHALL INCLUDE A TONEABLE/TRACEABLE PULL STRING FOR FUTURE LOCATING.
19. NAPERVILLE LUMINAIRES SHALL BE THEIR STANDARD LEOTEK MODEL NO: GC2-120F-MV-NW-2-GY-700 PCR7-SC-WL. AURORA LUMINAIRES SHALL BE LUMEC MODEL NO: RVM-190W112LED4K-G2-LE2.
20. INSTALLATION OF REMOTELY MOUNTED PHOTOCELL SHALL BE INCLUDED IN THE COST OF THE PAY ITEM FOR THE LIGHTING CONTROLLER.
21. EXISTING ROADWAY LIGHTING SHALL REMAIN OPERATIONAL UNTIL THE TIME CONSTRUCTION REQUIRES THE REMOVAL OF POLES OR LUMINAIRES.

PLAN — NOTE BOOK NO. ____ — SURVEYED / PLOTTED / ALIGNMENT CHECKED / RT. OF WAY CHECKED / CADD FILE NAME — BY — DATE

PROFILE — NOTE BOOK NO. ____ — SURVEYED / PLOTTED / GRADES CHECKED / BLM. NOTED / STRUCTURE NOTAT'NS CH'KD — BY — DATE

FILE NAME = LIGHTING NOTES

TranSmart
100 S. Wacker Drive Suite 400
Chicago, Illinois 60606

| | | | |
|---|---|---|---|
| USER NAME = brvanderwal | DESIGNED - SMF | REVISED - | |
| | DRAWN - SMF | REVISED - | |
| PLOT SCALE = 100.0000 ' / in. | CHECKED - MR | REVISED - | |
| PLOT DATE = 1/25/2025 | DATE - 1/25/2025 | REVISED - | |

STATE OF ILLINOIS
DEPARTMENT OF TRANSPORTATION

ELECTRICAL SYMBOLS, ABBREVIATIONS AND GENERAL NOTES

SCALE: AS SHOWN | SHEET 1 OF 12 SHEETS | STA. TO STA.

| F.A.U. RTE. | SECTION | COUNTY | TOTAL SHEETS | SHEET NO. |
|---|---|---|---|---|
| 1509 | 06-00133-00-BR | DuPAGE | 425 | 138 |

CONTRACT NO. 61G79

ILLINOIS FED. AID PROJECT

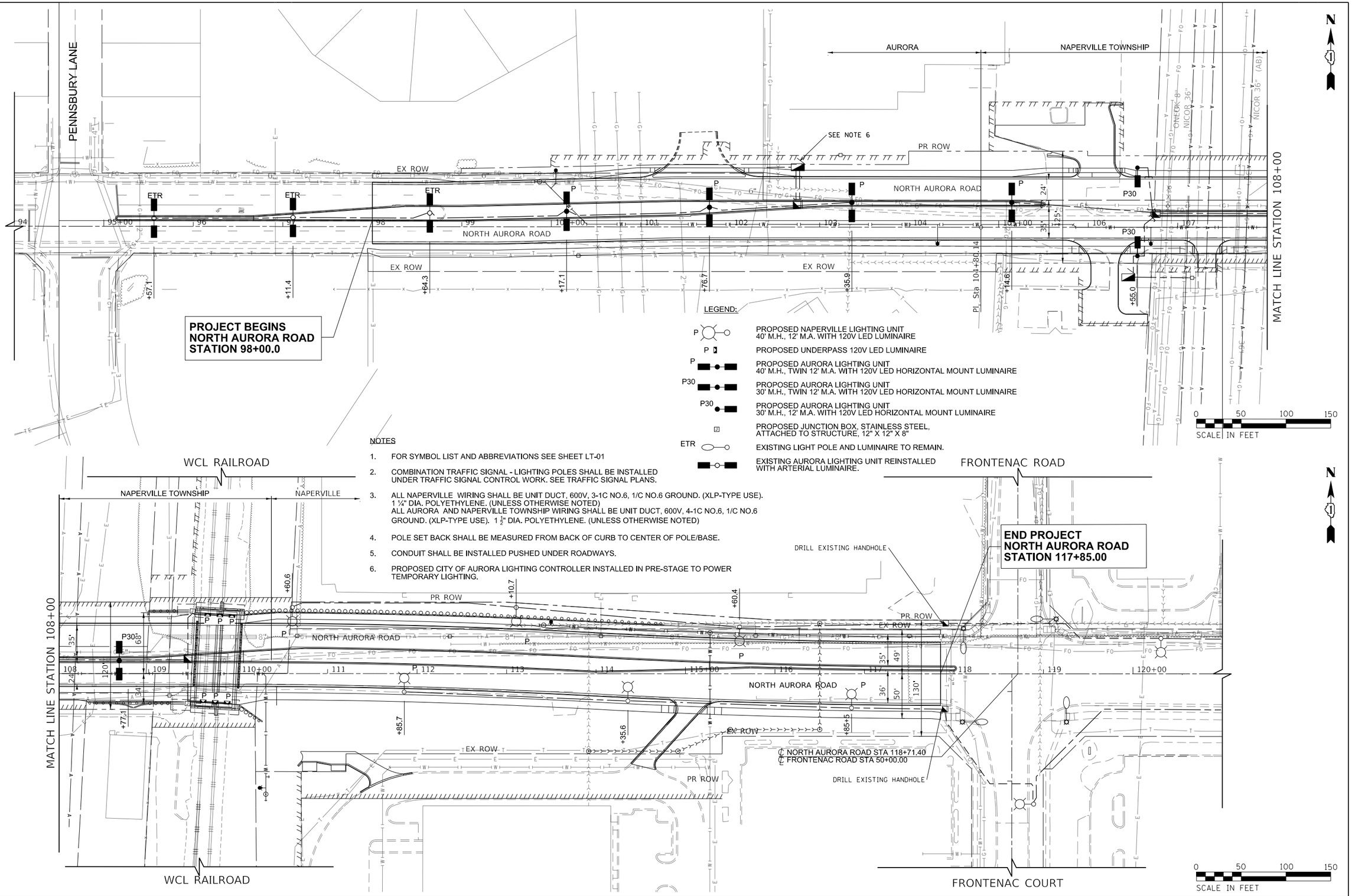


NOTES

1. FOR SYMBOL LIST AND ABBREVIATIONS SEE SHEET LT-01
2. COMBINATION TRAFFIC SIGNAL - LIGHTING POLES SHALL BE INSTALLED UNDER TRAFFIC SIGNAL CONTROL WORK. SEE TRAFFIC SIGNAL PLANS.
3. ALL NAPERVILLE WIRING SHALL BE UNIT DUCT, 600V, 3-1C NO.6, 1/C NO.6 GROUND. (XLP-TYPE USE). 1 ¼" DIA. POLYETHYLENE. (UNLESS OTHERWISE NOTED)
   ALL AURORA AND NAPERVILLE TOWNSHIP WIRING SHALL BE UNIT DUCT, 600V, 4-1C NO.6, 1/C NO.6 GROUND. (XLP-TYPE USE). 1 ½" DIA. POLYETHYLENE. (UNLESS OTHERWISE NOTED)
4. POLE SET BACK SHALL BE MEASURED FROM BACK OF CURB TO CENTER OF POLE/BASE.
5. CONDUIT SHALL BE INSTALLED PUSHED UNDER ROADWAYS.
6. PROPOSED CITY OF AURORA LIGHTING CONTROLLER INSTALLED IN PRE-STAGE TO POWER TEMPORARY LIGHTING.

| PLAN | BY | DATE |
|---|---|---|
| SURVEYED | | |
| PLOTTED | | |
| ALIGNMENT CHECKED | | |
| RT. OF WAY CHECKED | | |
| CADD FILE NAME | | |
| NOTE BOOK NO. | | |

| PROFILE | BY | DATE |
|---|---|---|
| SURVEYED | | |
| PLOTTED | | |
| GRADES CHECKED | | |
| BM. NOTED | | |
| STRUCTURE NOTATNS CHKD | | |
| NOTE BOOK NO. | | |

FILE NAME = 060092-LIGHT-01

TranSmart
100 S. Wacker Drive Suite 400
Chicago, Illinois 60606

| | | | |
|---|---|---|---|
| USER NAME = brvanderwal | DESIGNED - SMF | REVISED - | |
| | DRAWN - SMF | REVISED - | |
| PLOT SCALE = 100.0001 ' / in. | CHECKED - MR | REVISED - | |
| PLOT DATE = 2/27/2025 | DATE - 2/28/2025 | REVISED - | |

**STATE OF ILLINOIS**
**DEPARTMENT OF TRANSPORTATION**

**NORTH AURORA ROAD**
**PENNSBURY LANE TO FRONTENAC ROAD**
**PROPOSED LIGHTING**

SCALE: 1"=50' | SHEET 2 OF 12 SHEETS | STA. 94+00.00 TO STA. 121+00.00

| F.A.U. RTE. | SECTION | COUNTY | TOTAL SHEETS | SHEET NO. |
|---|---|---|---|---|
| 1509 | 06-00133-00-BR | DuPAGE | 425 | 139 |

CONTRACT NO. 61G79

ILLINOIS FED. AID PROJECT

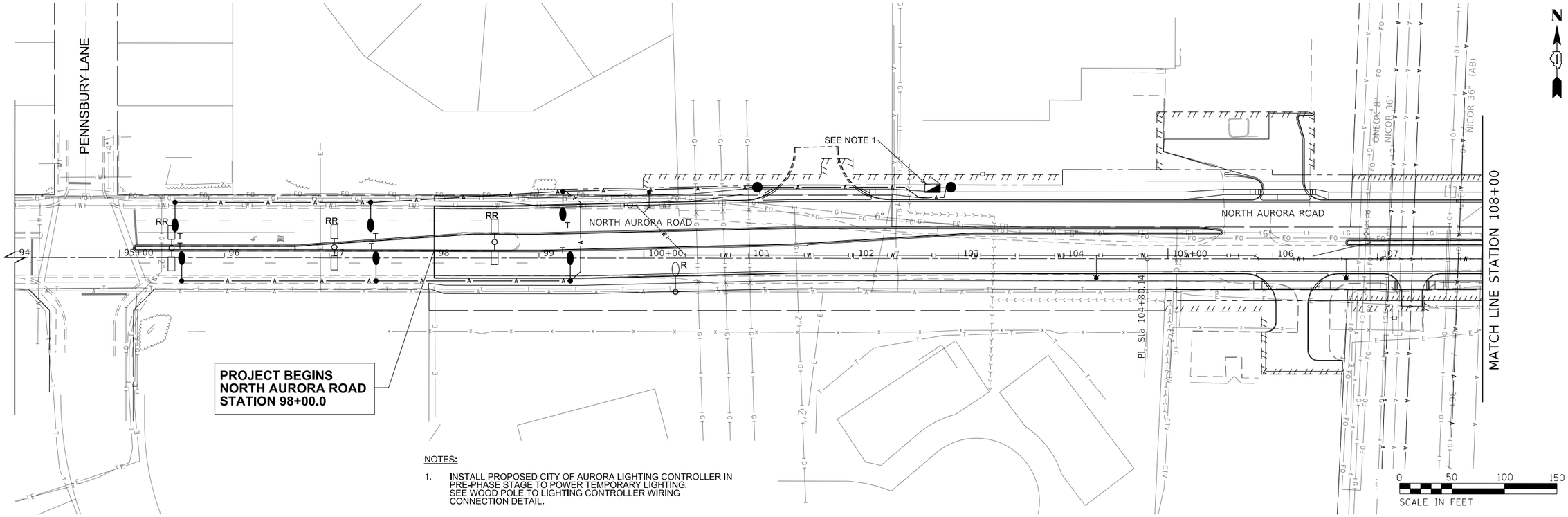


NOTES:

1. INSTALL PROPOSED CITY OF AURORA LIGHTING CONTROLLER IN PRE-PHASE STAGE TO POWER TEMPORARY LIGHTING. SEE WOOD POLE TO LIGHTING CONTROLLER WIRING CONNECTION DETAIL.

LEGEND:

- TEMPORARY WOOD POLE, 35 FT, CLASS 4
- T — TEMPORARY LIGHTING, 50 FT WOOD POLE, 12FT MA, 185 W LED
- EXISTING LIGHT POLE AND LUMINAIRE TO REMAIN.
- L — EXISTING LIGHT ARM AND LUMINAIRE TO BE REMOVED
- R — EXISTING POLE AND LUMINAIRE TO BE REMOVED
- RR — EXISTING LIGHT POLE TO BE REMOVED AND REINSTALLED AT DIFERENT LOCATION
- A — TEMPORARY AERIAL LIGHTING CABLE 2-1/C NO. 6 WITH MESSENGER WIRE

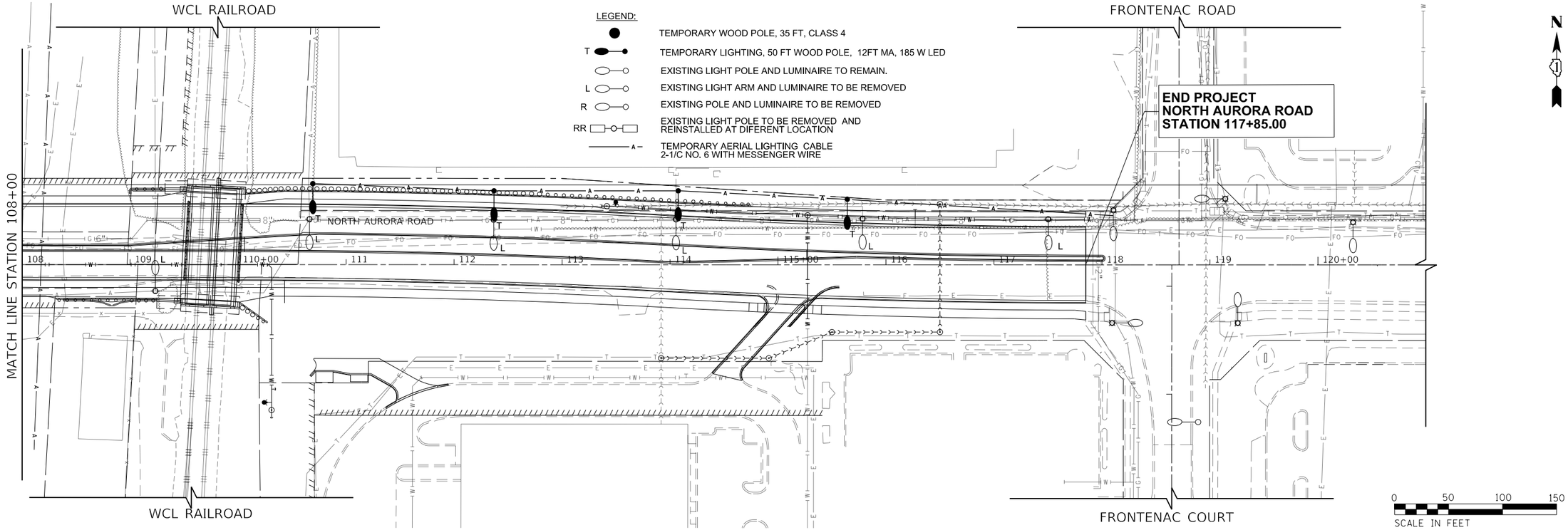


| PLAN | BY | DATE |
|---|---|---|
| SURVEYED | | |
| PLOTTED | | |
| ALIGNMENT CHECKED | | |
| RT. OF WAY CHECKED | | |
| CADD FILE NAME | | |
| NOTE BOOK NO. | | |

| PROFILE | BY | DATE |
|---|---|---|
| SURVEYED | | |
| PLOTTED | | |
| GRADES CHECKED | | |
| BLM. NOTED | | |
| STRUCTURE NOTATNS CHKD | | |
| NOTE BOOK NO. | | |

FILE NAME = Temporary Lighting

TranSmart
100 S. Wacker Drive Suite 400
Chicago, Illinois 60606

| | | | |
|---|---|---|---|
| USER NAME = brvanderwal | DESIGNED - SMF | REVISED - | |
| | DRAWN - SMF | REVISED - | |
| PLOT SCALE = 100.0001 ' / in. | CHECKED - MR | REVISED - | |
| PLOT DATE = 2/27/2025 | DATE - 2/28/2025 | REVISED - | |

STATE OF ILLINOIS
DEPARTMENT OF TRANSPORTATION

NORTH AURORA ROAD
PENNSBURY LANE TO FRONTENAC ROAD
REMOVAL AND TEMPORARY LIGHTING

SCALE: 1"=50' | SHEET 3 OF 12 SHEETS | STA. 94+00.00 TO STA. 121+00.00

| F.A.U. RTE. | SECTION | COUNTY | TOTAL SHEETS | SHEET NO. |
|---|---|---|---|---|
| 1509 | 06-00133-00-BR | DuPAGE | 426 | 140 |

CONTRACT NO. 61G79

ILLINOIS FED. AID PROJECT

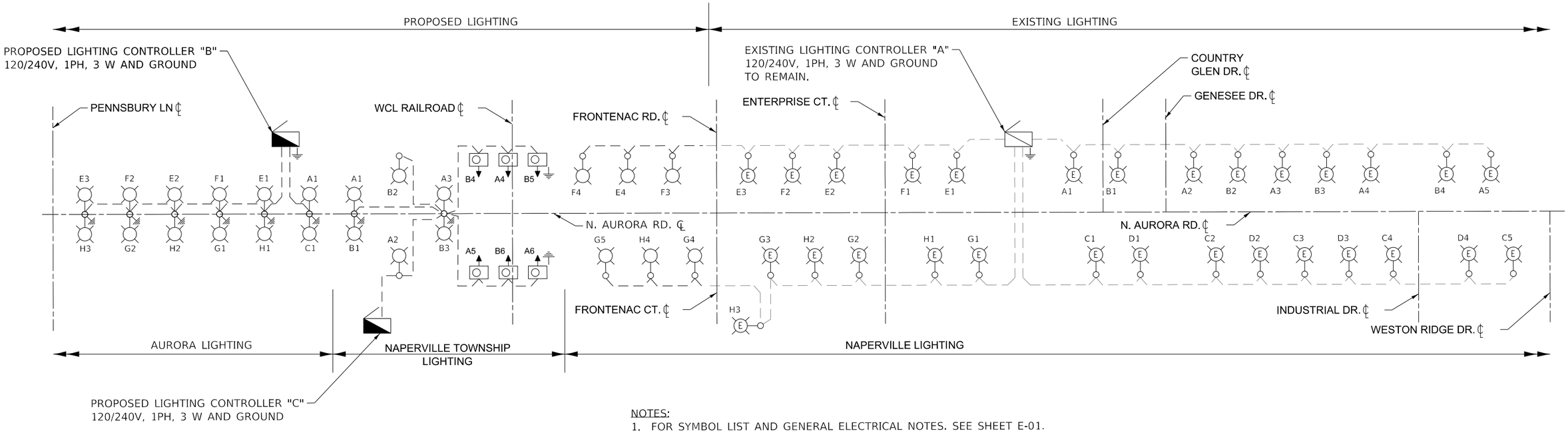


NOTES:
1. FOR SYMBOL LIST AND GENERAL ELECTRICAL NOTES. SEE SHEET E-01.
2. INTERSECTION LUMINAIRES POWERED BY TRAFFIC SIGNAL CONTROLLERS ARE NOT SHOWN.
3. LUMINAIRE CIRCUIT RUNS ARE TO BE ALTERNATING.

## LIGHTING CONTROLLER SINGLE LINE DIAGRAM

NOT TO SCALE

### PANEL SCHEDULE AND LOAD TABULATION LIGHTING CONTROLLER "B" 120/240VAC, 1-PHASE, 3-WIRE

MAIN BREAKER: 100A

| CIRCUIT | BREAKER TRIP AMPS | AMPS | |
|---|---|---|---|
| | | RED | BLACK |
| A | 35-2P | 3.08 | |
| B | 35-2P | | 3.08 |
| C | 35-2P | 3.08 | |
| D | 35-2P | | 3.08 |
| E | 35-2P | 4.62 | |
| F | 35-2P | | 3.08 |
| G | 35-2P | 3.08 | |
| H | 35-2P | | 4.62 |
| | | | |
| | SUB-TOTAL | 13.86 | 13.86 |
| | TOTAL | 27.7 | |

### PANEL SCHEDULE AND LOAD TABULATION LIGHTING CONTROLLER "C" 120/240VAC, 1-PHASE, 3-WIRE

MAIN BREAKER: 100A

| CIRCUIT | BREAKER TRIP AMPS | AMPS | |
|---|---|---|---|
| | | RED | BLACK |
| A | 35-2P | 5.85 | |
| B | 35-2P | | 5.85 |
| C | 35-2P | | |
| D | 35-2P | | |
| E | 35-2P | | |
| F | 35-2P | | |
| G | 35-2P | | |
| H | 35-2P | | |
| | | | |
| | SUB-TOTAL | 5.85 | 5.85 |
| | TOTAL | 11.7 | |

### PANEL SCHEDULE AND LOAD TABULATION LIGHTING CONTROLLER "A" 120/240VAC, 1-PHASE, 3-WIRE

MAIN BREAKER: 100A

| CIRCUIT | BREAKER TRIP AMPS | AMPS | |
|---|---|---|---|
| | | RED | BLACK |
| A | 35-2P | 10.88 | |
| B | 35-2P | | 8.70 |
| C | 35-2P | 10.88 | |
| D | 35-2P | | 8.70 |
| E | 35-2P | 8.70 | |
| F | 35-2P | | 8.70 |
| G | 35-2P | 10.88 | |
| H | 35-2P | | 8.70 |
| | | | |
| | SUB-TOTAL | 41.34 | 34.8 |
| | TOTAL | 76.14 | |

PLAN — NOTE BOOK NO. ____ — SURVEYED / PLOTTED / ALIGNMENT CHECKED / RT. OF WAY CHECKED / CADD FILE NAME — BY — DATE

PROFILE — NOTE BOOK NO. ____ — SURVEYED / PLOTTED / GRADES CHECKED / B.M. NOTED / STRUCTURE NOTATNS CHKD — BY — DATE

FILE NAME = Lighting Detail

TranSmart
100 S. Wacker Drive Suite 400
Chicago, Illinois 60606

| | | | |
|---|---|---|---|
| USER NAME = brvanderwal | DESIGNED - SMF | REVISED - | |
| | DRAWN - SMF | REVISED - | |
| PLOT SCALE = 100.0000 ' / in. | CHECKED - MR | REVISED - | |
| PLOT DATE = 1/25/2025 | DATE - 1/25/2025 | REVISED - | |

**STATE OF ILLINOIS**
**DEPARTMENT OF TRANSPORTATION**

**NORTH AURORA ROAD**
**PENSBURY LANE TO FRONTENAC ROAD**
**SINGLE LINE DIAGRAM**

SCALE: NTS | SHEET 4 OF 12 SHEETS | STA. N/A | TO STA. N/A

| F.A.U. RTE. | SECTION | COUNTY | TOTAL SHEETS | SHEET NO. |
|---|---|---|---|---|
| 1509 | 06-00133-00-BR | DuPAGE | 425 | 141 |

CONTRACT NO. 61G79

ILLINOIS FED. AID PROJECT

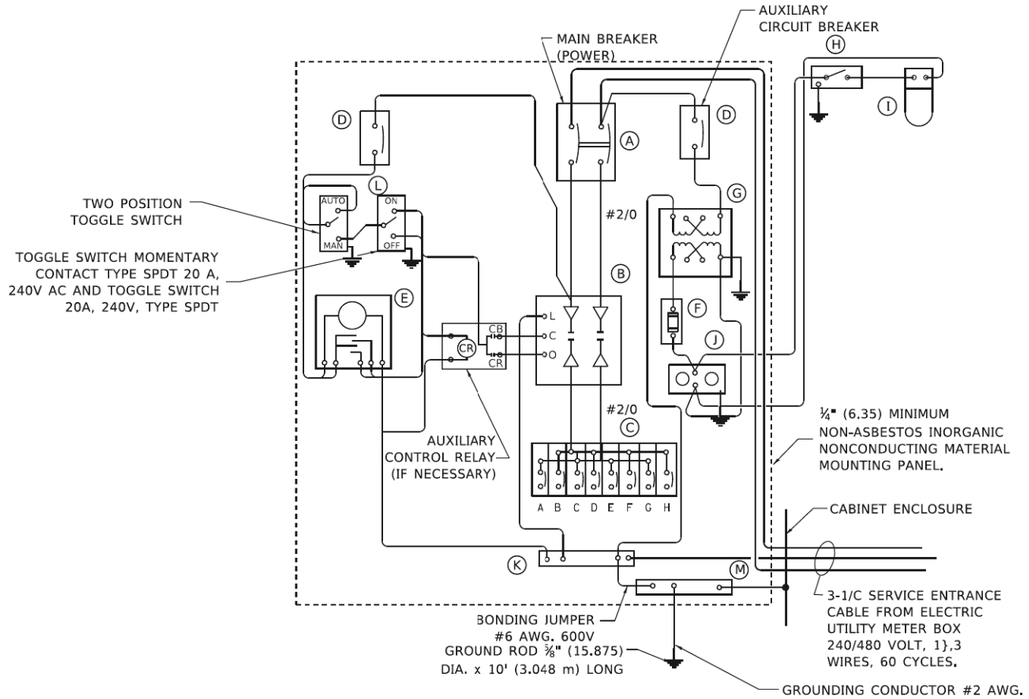


**PANEL WIRING DIAGRAM**

## PANEL EQUIPMENT

### BILL OF MATERIAL

| ITEM | QUANTITY | DESCRIPTION |
|---|---|---|
| A | 1 | MAIN CIRCUIT BREAKER, 2 POLE, 600 VOLT 100 AMP. FRAME, 100 AMP. NON-INTERCHANGEABLE TRIP INTERRUPTING RATING NEMA-22000 AMP. AT 480 VOLT. |
| B | 1 | REMOTE CONTROL SWITCH, ELECTRICALLY OPERATED, MECHANICALLY HELD, 2 POLE, SINGLE THROW, 100 AMP., 600 VOLTS CONTROL CIRCUIT 240 VOLT. |
| C | 8 | CIRCUIT BREAKERS, 1 POLE, 100AMP. FRAME, 50 AMP. NON-INTERCHANGEABLE TRIP INTERRUPTING RATING NEMA-10,000 AMP. AT 240 V. |
| D | 2 | CONTROL CIRCUIT-CIRCUIT BREAKER. 1 POLE, 240 V., 100 AMP. FRAME, 15 AMP. NON-INTERCHANGEABLE TRIP INTERRUPTING RATING NEMA-5000 AMP. AT 240 V. |
| E | 1 | ASTRONOMIC MICROPROCESSOR-BASED 2-CHANNEL CONTROLLER (TIME SWITCH). |
| F | 1 | 20 AMP, 120 VOLT FUSE. |
| G | 1 | 1.5 KVA, SINGLE PHASE, ENCAPSULATED TRANSFORMER 240 X 480 / 120 X 240 VOLT, 60 Hz. |
| H | 1 | SPST 20A SWITCH ON DOOR, TO TURN LIGHT ON WHEN DOOR IS OPEN, |
| I | 1 | INCANDESCENT LIGHTING FIXTURE ENCLOSED AND GASKETED WITH 60 WATT, LED EQUIVALENT, 120 V. LAMP. |
| J | 1 | 20 AMP, 120 VOLT, DUPLEX RECEPTACLE, GFCI. |
| K | 1 | COPPER GROUND BUS 1#4" (6.35) X 1" (25.4) X 12" (304.8 mm) LONG MOUNTED ON PANEL WITH LUGS AND 4 SPARE LUGS |
| L | 1 | TOGGLE SWITCHES MOUNTED IN 4" (101.6) X 4" (101.6 mm) BOX. |
| M | 1 | COPPER GROUND BUS 1#4" (6.35) X 1" (25.4) X 12" (304.8 mm) LONG MOUNTED ON PANEL WITH LUGS AND SPARE LUGS. |

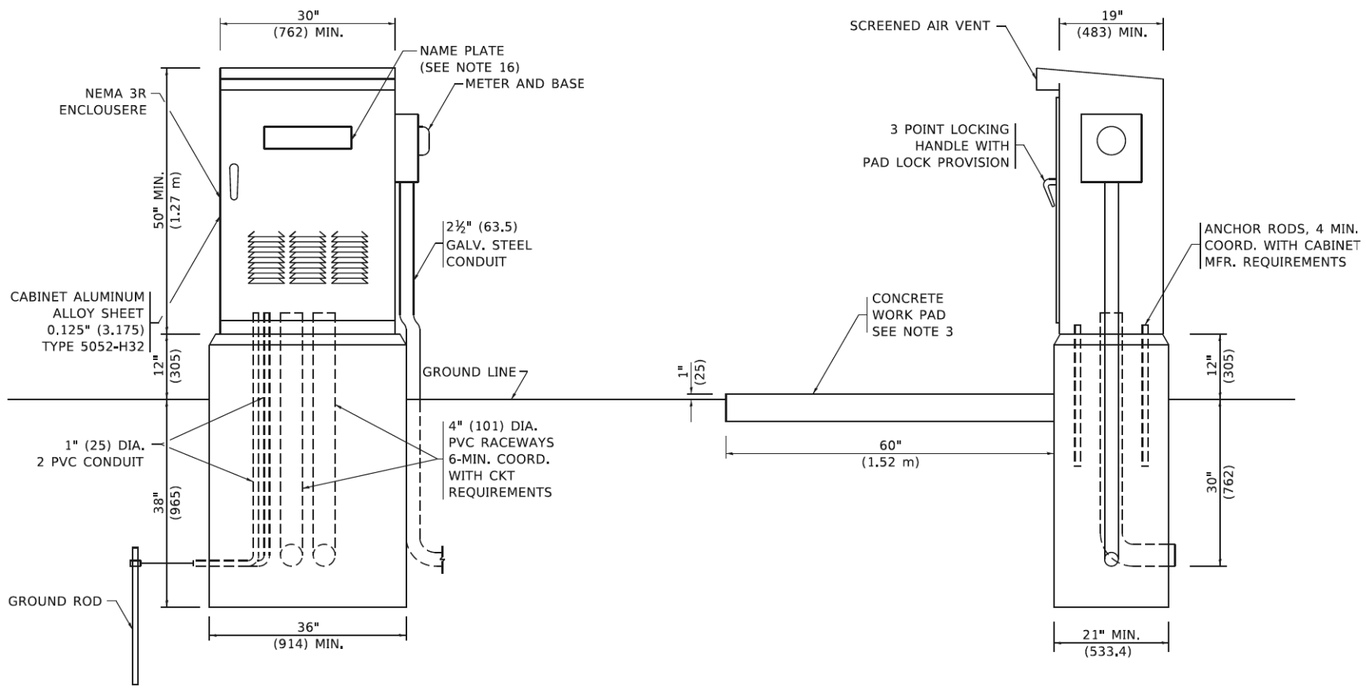


## NOTES

1. ALL DIMENSIONS ARE IN INCHES (MILLIMETERS) UNLESS OTHERWISE SHOWN.
2. FOUNDATION SIZE SHALL BE COORDINATED WITH CABINET SIZE AND MFR.
3. IN FRONT OF CONTROL CABINET DOOR, REMOVE VEGETATION AND 2" (50.8 mm) TOP SOIL, LEVEL THE AREA AND ON TOP, PLACE LENGTH WISE PARALLEL TO CONTROL CABINET, A CONCRETE PAD 36" (914.4 mm) x 60" (18.288 m) x 4" (101 mm) MIN. SIZE. THE COST OF LABOR AND MATERIALS ARE INCLUDED IN THE COST OF THE CONTROLLER.
4. DOOR SHALL BE CONSTRUCTED FROM SAME TYPE OF MATERIAL AND THICKNESS AS CABINET.
5. DOOR SHALL BE EQUIPPED WITH THREE POINT LATCHING MECHANISM WITH NYLON ROLLERS AT TOP THE BOTTOM.
6. DOOR HINGE SHALL BE A HEAVY GAUGE CONTINUOUS HINGE WITH A 1#4" (6.35 mm) DIA. STAINLESS STEEL HINGE PIN.
7. ALL EXTERNAL HARDWARE SHALL BE STAINLESS STEEL.
8. CONTROL WIRING TO BE #12 AWG, 600V, TYPE "SIS" GRAY SWITCH BOARD WIRE, STRANDED COPPER.
9. METER BOX SHALL BE MOUNTED ON THE SIDE OF CONTROL CABINET, NEAR TO THE SERVICE POLE.
10. CABINETS SHALL BE PRIMED AND PAINTED AS SPECIFIED.
11. THE HEADS OF CONNECTORS SCREWS SHALL BE PAINTED WHITE FOR NEUTRAL BAR CONNECTION AND GREEN FOR GROUND BAR CONNECTORS.
12. ALL WIRING WITHIN THE CABINET SHALL BE COLOR CODED AS INDICATED.
    R = RED BL = BLUEW = WHITE
    B = BLACK Y = YELLOW G = GREEN
13. PROVIDE SEALING GROMMETS FOR ALL OPEN WIRING EXTENDED FROM DEVICES IN BOXES OR CABINETS WITHIN THE CONTROL CABINET.
14. ALL WIRING SHALL BE NEATLY DRESSED AND SUPPORTED.
15. THE CONTROLLER SHALL BE CONSTRUCTED TO U.L. STD. 508 AND BEAR THE U.L. LABEL "ENCLOSED INDUSTRIAL CONTROL PANEL".
16. 12" (304.8) X 16" (406.4 mm) STAINLESS STEEL EXTERIOR NAMEPLATE SHALL BE ENGRAVED TO "NAPERVILLE ROADWAY LIGHTING CONTROLS" UNLESS OTHERWISE SPECIFIED.

PLAN — NOTE BOOK NO. ____ — SURVEYED / PLOTTED / ALIGNMENT CHECKED / RT. OF WAY CHECKED / CADD FILE NAME — BY — DATE

PROFILE — NOTE BOOK NO. ____ — SURVEYED / PLOTTED / GRADES CHECKED / B.M. NOTED / STRUCTURE NOTAT'NS CHKD — BY — DATE

FILE NAME = 0600P32-sht-LTDETAILS

TranSmart
100 S. Wacker Drive Suite 400
Chicago, Illinois 60606

| | | | |
|---|---|---|---|
| USER NAME = brvanderwal | DESIGNED - SMF | REVISED - | |
| | DRAWN - SMF | REVISED - | |
| PLOT SCALE = 40.0000 ' / in. | CHECKED - MR | REVISED - | |
| PLOT DATE = 1/25/2025 | DATE - 1/25/2025 | REVISED - | |

**STATE OF ILLINOIS**
**DEPARTMENT OF TRANSPORTATION**

**NORTH AURORA ROAD – PENNSBURY LANE TO FRONTENAC ROAD**
**LIGHTING CONTROLLER DETAIL**

SCALE: NONE | SHEET 5 OF 12 SHEETS | STA. TO STA.

| F.A.U. RTE. | SECTION | COUNTY | TOTAL SHEETS | SHEET NO. |
|---|---|---|---|---|
| 1509 | 06-00133-00-BR | DuPAGE | 426 | 142 |

CONTRACT NO. 61G79

ILLINOIS FED. AID PROJECT

## LIGHT POLE FOUNDATION DEPTH TABLE
## 40 FT. (12.192 m) TO 47.5 FT. (14.478 m) MOUNTING HEIGHT

| SOIL CONDITIONS | DESIGN DEPTH "D" OF FOUNDATION | |
|---|---|---|
| | SINGLE ARM POLE | TWIN ARM POLE |
| SOFT CLAY<br>Qu = 0.375 TON/SQ. FT. | 13'-0"<br>(3.96 m) | 15'-0"<br>(4.57 m) |
| MEDIUM CLAY<br>Qu = 0.75 TON/SQ.FT | 9'-6"<br>(2.09 m) | 10'-9"<br>(3.23 m) |
| STIFF CLAY<br>Qu = 1.50 TON/SQ. FT. | 7'-0"<br>(2.13 m) | 8'-0"<br>(2.44 m) |
| LOOSE SAND<br>Ø = 34° | 9'-0"<br>(2.74 m) | 10'-0"<br>(3.05 m) |
| MEDIUM SAND<br>Ø = 37.5° | 8'-3"<br>(2.52 m) | 9'-0"<br>(2.74 m) |
| DENSE SAND<br>Ø = 40° | 7'-9"<br>(2.36 m) | 9'-0"<br>(2.74 m) |

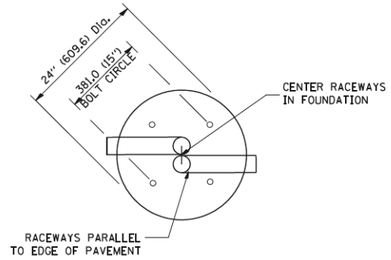


TOP VIEW

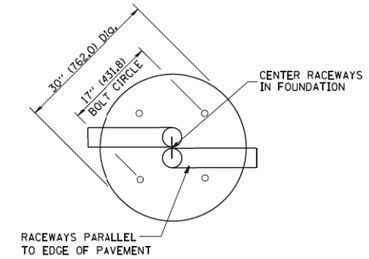


TOP VIEW

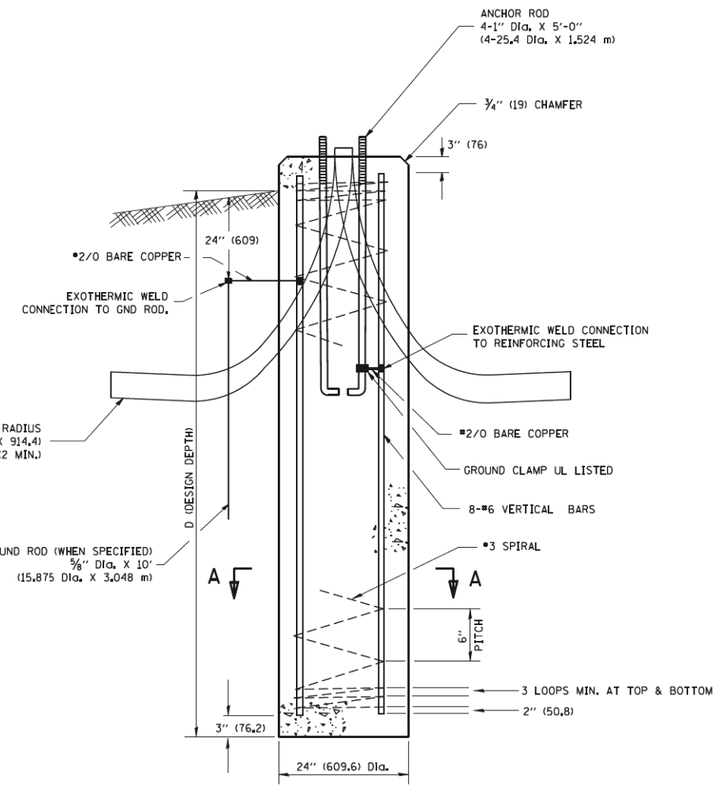


FOUNDATION DETAIL

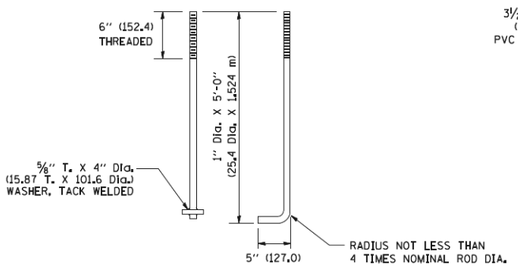


ANCHOR ROD DETAIL

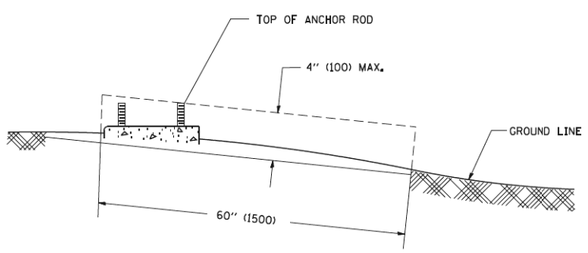


FOUNDATION EXTENSION DETAIL

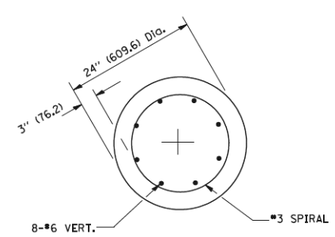


SECTION A-A

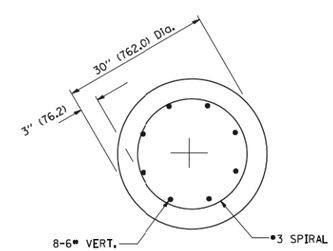


SECTION A-A

## NOTES

1. ALL DIMENSIONS ARE IN INCHES (MILLIMETERS) UNLESS OTHERWISE SHOWN.
2. THE ANCHOR RODS AND RACEWAYS SHALL BE PROPERLY SECURED IN PLACE BEFORE THE CONCRETE IN PLACED.
3. THE FOUNDATION SHALL NOT PROTRUDE MORE THAN 100MM (4 IN.) ABOVE THE FINISHED GRADE WITHIN A 60 IN. (1.5 m) CHORD ACROSS THE FOUNDATION, WITH ANCHOR RODS INCLUDED, IN ACCORDANCE WITH AASHTO GUIDELINES. IF THE FOUNDATION HEIGHT, INCLUDING ANCHOR RODS, EXTENDS BEYOND THESE SPECIFIED LIMITS, THE FOUNDATION SHALL BE REPLACED AT THE CONTRACTOR'S EXPENSE. SEE FOUNDATION EXTENSION DETAIL.
4. THE HOLE FOR THE FOUNDATION SHALL BE MADE BY DRILLING WITH AN AUGER, OF THE SAME DIAMETER AS THE FOUNDATION. IF SOIL CONDITIONS REQUIRE THE USE OF A LINER TO FORM THE HOLE, THE LINER SHALL BE WITHDRAWN AS THE CONCRETE IS DEPOSITED.
5. THE TOP OF THE FOUNDATION SHALL BE CONSTRUCTED LEVEL. A LINER OR FORM SHALL BE USED TO PRODUCE A UNIFORM SMOOTH SIDE TO THE TOP OF THE FOUNDATION. FOUNDATION TOP SHALL BE CHAMFERED ¾-IN. (20 mm).
6. THE CONCRETE SHALL BE CLASS SI. CONCRETE SHALL CURE ACCORDING TO ARTICLE 1020.13 BEFORE LIGHT POLES ARE INSTALLED.
7. THE ANCHOR ROD SHALL BE A HOOK ROD TYPE. COLD BENDING OF THE ANCHOR ROD WILL NOT BE ALLOWED. THE RADIUS OF THE HOOK BEND SHALL NOT BE LESS THAN 4 TIMES THE NOMINAL DIAMETER OF THE ANCHOR ROD. A TACK WELDED ANCHOR ROD MAY BE SUBSTITUTED WITH THE APPROVAL OF THE ENGINEER.
8. THE ANCHOR RODS SHALL BE ACCORDING TO ASTM F1554 GRADE 725 (GRADE 105). NUTS SHALL BE HEXAGON NUTS ACCORDING TO ASTM A 194 2H OR ASTM A 563 DH, AND WASHERS SHALL BE ACCORDING TO ASTM F 436.
9. ANCHOR RODS, NUTS AND WASHERS SHALL BE COMPLETELY GALVANIZED BY EITHER THE HOT-DIPPED PROCESS CONFORMING WITH AASHTO M 232, THE MECHANICAL PLATING METHOD CONFORMING TO AASHTO M 298, CLASS 50 WITH A MAXIMUM COATING THICKNESS OF 150 UM(6 MILS) OR THE ELECTROLYTIC PROCESS ACCORDING TO ASTM F 1136.
10. THE ANCHOR RODS SHALL BE THREADED A MINIMUM OF 6 INCHES (150 mm) WITH A MINIMUM OF 3 INCHES (75 mm) OF THREADED ANCHOR ROD EMBEDDED IN THE FOUNDATION.
11. ANCHOR RODS SHALL PROJECT 2¾" (69.9 mm) ABOVE THE TOP OF THE FOUNDATION. IF BREAKAWAY COUPLINGS ARE SPECIFIED, THE CONTRACTOR SHALL CAREFULLY COORDINATE THE ANCHOR ROD PROJECTION WITH THE INSTALLATION REQUIREMENTS OF THE BREAKAWAY COUPLINGS.
12. THE CONTRACTOR SHALL USE A #3 SPIRAL AT 6" (152.4 mm) PITCH OR MAY SUBSTITUTE #3 TIES AT 12" (304.8 mm) O.C. WITH THE APPROVAL OF THE ENGINEER.
13. THE CABLE TRENCHES AND FOUNDATION SHALL BE BACK FILLED AND COMPACTED AS SPECIFIED BEFORE THE LIGHT POLE IS ERECTED.
14. THE RACEWAYS SHALL PROJECT 1" (25.4 mm) ABOVE THE TOP OF THE FOUNDATION.

| PLAN | BY | DATE |
|---|---|---|
| SURVEYED | | |
| PLOTTED | | |
| ALIGNMENT CHECKED | | |
| RT. OF WAY CHECKED | | |
| CADD FILE NAME | | |
| NOTE BOOK NO. | | |

| PROFILE | BY | DATE |
|---|---|---|
| SURVEYED | | |
| PLOTTED | | |
| GRADES CHECKED | | |
| B.M. NOTED | | |
| STRUCTURE NOTATNS CHKD | | |
| NOTE BOOK NO. | | |

FILE NAME = 0600932-sht-LTDETAILS

TranSmart
100 S. Wacker Drive Suite 400
Chicago, Illinois 60606

| | | | |
|---|---|---|---|
| USER NAME = brvanderwal | DESIGNED - SMF | REVISED - | |
| | DRAWN - SMF | REVISED - | |
| PLOT SCALE = 40.0000 ' / in. | CHECKED - MR | REVISED - | |
| PLOT DATE = 1/25/2025 | DATE - 1/25/2025 | REVISED - | |

STATE OF ILLINOIS
DEPARTMENT OF TRANSPORTATION

NORTH AURORA ROAD – PENNSBURY LANE TO FRONTENAC ROAD
LIGHT POLE FOUNDATION DETAIL

SCALE: | SHEET 6 OF 12 SHEETS | STA. TO STA.

| F.A.U. RTE. | SECTION | COUNTY | TOTAL SHEETS | SHEET NO. |
|---|---|---|---|---|
| 1509 | 06-00133-00-BR | DuPAGE | 426 | 143 |

CONTRACT NO. 61G79

ILLINOIS FED. AID PROJECT

## FOUNDATION DESIGN TABLE

| TYPE OF SOIL | DESIGN DEPTH OF FOUNDATION | | REINFORCEMENT IN FOUNDATION | | | |
|---|---|---|---|---|---|---|
| | SINGLE ARM D | TWIN ARM D | SINGLE ARM | | TWIN ARM | |
| | | | VERT BARS | SPIRAL | VERT BARS | SPIRAL |
| SOFT CLAY | 13'-0" (3.962 m) | 15'-0" (4.572 m) | 8-#6X12'-6" (3.810 m) | #3X122' (37.186 m) | 8-#6X14'-3" (4.343 m) | #3X141' (42.977 m) |
| MEDIUM CLAY | 9'-6" (2.896 m) | 10'-9" (3.277 m) | 8-#6X9'-0" (2.743 m) | #3X90' (27.432 m) | 8-#6X10'-0" (3.048 m) | #3X100' (30.480 m) |
| STIFF CLAY | 7'-0" (2.134 m) | 8'-0" (2.438 m) | 8-#6X6'-6" (1.981 m) | #3X66' (20.112 m) | 8-#6X7'-6" (2.286 m) | #3X76' (23.165 m) |
| LOOSE SAND | 9'-0" (2.743 m) | 10'-0" (3.048 m) | 8-#6X8'-6" (2.591 m) | #3X85' (25.908 m) | 8-#6X9'-6" (2.896 m) | #3X94' (28.651 m) |
| MEDIUM SAND | 8'-3" (2.515 m) | 9'-0" (2.743 m) | 8-#6X8'-0" (2.438 m) | #3X78' (23.774 m) | 8-#6X8'-6" (2.591 m) | #3X85' (25.908 m) |
| DENSE SAND | 7'-9" (2.362 m) | 9'-0" (2.743 m) | 8-#6X7'-6" (2.286 m) | #3X73' (22.250 m) | 8-#6X8'-6" (2.591 m) | #3X85' (25.908 m) |
| ROCK OR SOLIDIFIED SLAG | 5'-0" (1.524 m) | 5'-0" (1.524 m) | NONE | NONE | NONE | NONE |

## BILL OF MATERIAL

| MARK | NO. | SIZE | LENGTH | SHAPE |
|---|---|---|---|---|
| a | 10 | 6 | SEE BELOW | — |
| s | 12 | 4 | 8'-0" (2.438 m) | ▭ |
| $s_1$ | 3 | 3 | 7'-6" (2.286 m) | ▭ |
| $v_1$ | 8 | 6 | 2'-9" (0.838 m) | — |
| $v_2$ | | | | |

## OFFSET SCHEDULE

| SEWER DIAM. d IN. | PILE OFFSET from ℄-MED'N FT. | LENGTH of BAR a FT. |
|---|---|---|
| UP TO 24" (609.6 mm) | 3'-3" (0.991 m) | #6 x 5'-3" (1.600 m) |
| 27" (685.8 m)TO 36" (914.4 mm) | 3'-9" (1.143 m) | 5'-9" (1.753 m) |
| 42" (1066.8 mm) TO 48" (1219.2 mm) | 4'-6" (1.372 m) | 6'-6" (1.981 m) |
| 54" (1371.6 mm) TO 60" (1524.0 mm) | 5'-0" (1.524 m) | 7'-0" (2.134 m) |
| 66" (1676.4 mm) TO 72" (1828.8 mm) | 5'-6" (1.676 m) | 7'-6" (2.286 m) |

## NOTES

1. ALL DIMENSIONS ARE IN INCHES (MILLIMETERS) UNLESS OTHERWISE SHOWN.
2. THE ENGINEER SHALL DETERMINE THE CLASS OF SOIL DURING EXCAVATION AND SELECT THE DESIGN DEPTH OF FOUNDATION FROM THE DESIGN TABLE.
3. EXCAVATION OF THE POLE FOUNDATION SHALL BE MADE WITH AN AUGER, 24" (609.6 mm) OR 30" (762.0 mm) IN DIAMETER.
4. THE ANCHOR ROD SHALL BE A HOOK ROD TYPE. COLD BENDING OF THE ANCHOR ROD WILL NOT BE ALLOWED. THE RADIUS OF THE HOOK BEND SHALL NOT BE LESS THAN 4 TIMES THE NOMINAL DIAMETER OF THE ANCHOR ROD. A TACK WELDED ANCHOR ROD MAY BE SUBSTITUTED WITH THE APPROVAL OF THE ENGINEER.
5. THE ANCHOR BOLTS AND RACEWAYS SHALL BE PROPERLY SECURED IN PLACE BEFORE THE CONCRETE IS PLACED IN THE FORM.
6. THE ANCHOR RODS SHALL BE ACCORDING TO ASTM F1554 GRADE 725 (GRADE 105). NUTS SHALL BE HEXAGON NUTS ACCORDING TO ASTM A 194 2H OR ASTM A 563 DH, AND WASHERS SHALL BE ACCORDING TO ASTM F 436.
7. THE CONTRACTOR SHALL COORDINATE EXTENSION OF ANCHOR BOLTS ABOVE TOP OF FOUNDATION WITH THE BREAKAWAY DEVICE MANUFACTURER'S REQUIREMENTS. IF LIGHT POLE IS MOUNTED WITHOUT BREAKAWAY DEVICE, ANCHOR BOLTS SHALL PROJECT 23#4" (69.9 mm) ABOVE TOP OF THE FOUNDATION. THE CONTRACTOR SHALL CONFIRM ANCHOR BOLT EXTENTION WITH ENGINEER.
8. RACEWAYS SHALL PROJECT 1" (25.4 mm) ABOVE THE TOP OF THE FOUNDATION.
9. THE CABLE TRENCH SHALL BE BACKFILLED AND FIRMLY COMPACTED BEFORE THE LIGHT IS ERECTED.

## PLAN–CAP BEAM TOP VIEW

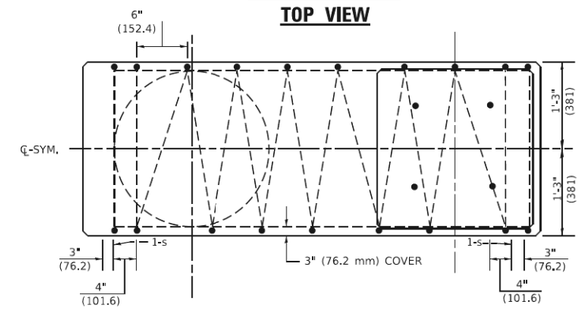


## TOP VIEW

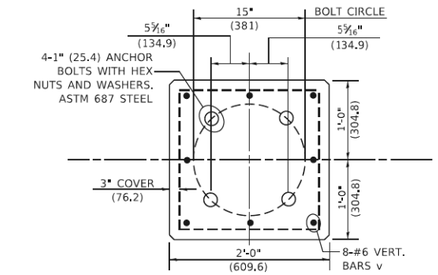


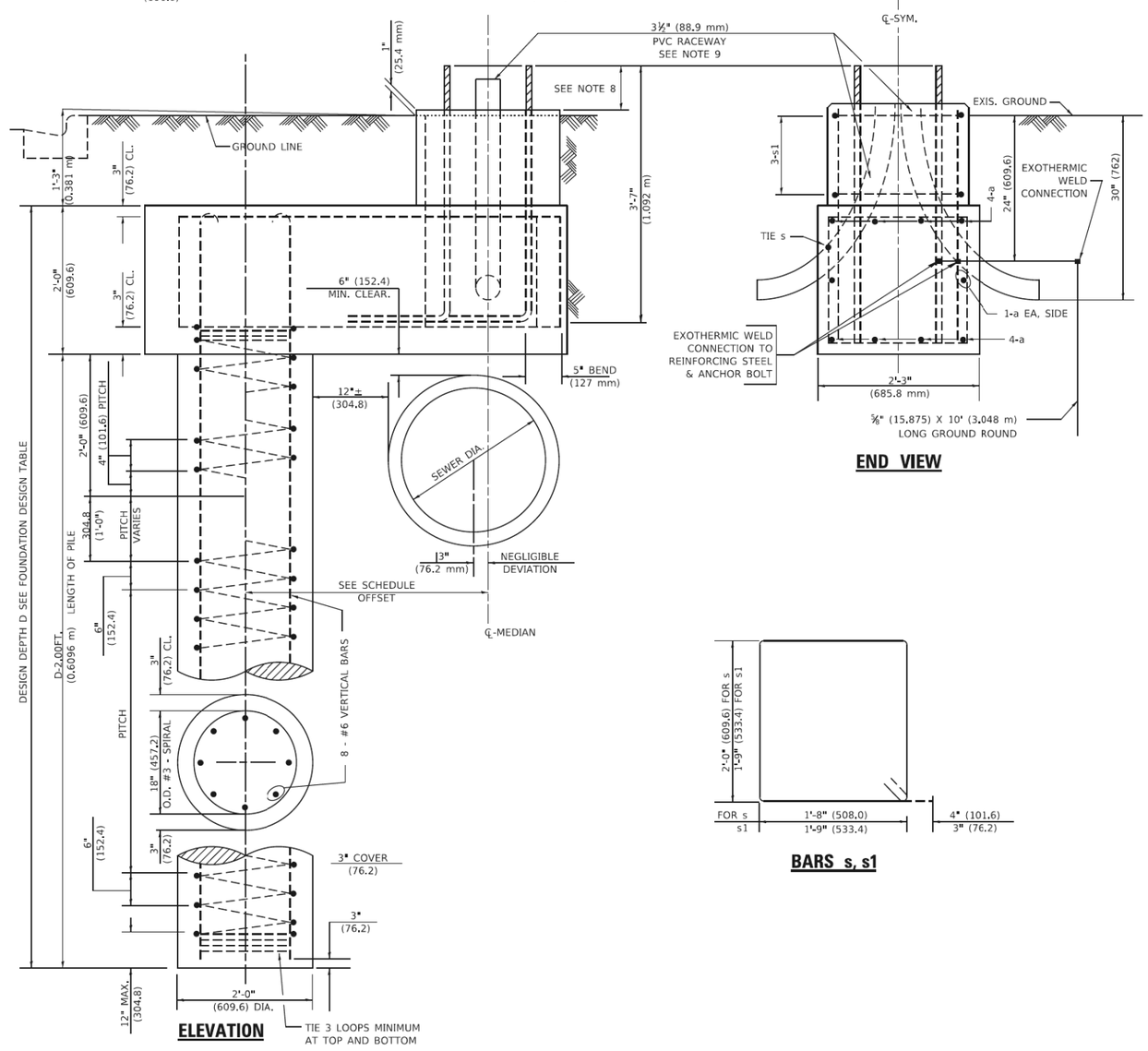


## END VIEW

## ELEVATION




## BARS s, s1

PLAN — NOTE BOOK NO. ____ — SURVEYED / PLOTTED / ALIGNMENT CHECKED / RT. OF WAY CHECKED / CADD FILE NAME — BY — DATE

PROFILE — NOTE BOOK NO. ____ — SURVEYED / PLOTTED / GRADES CHECKED / BM. NOTED / STRUCTURE NOTAT'NS CHK'D — BY — DATE

FILE NAME = 060092-sht-LTDETAILS

TranSmart
100 S. Wacker Drive Suite 400
Chicago, Illinois 60606

| | | | |
|---|---|---|---|
| USER NAME = brvanderwal | DESIGNED - SMF | REVISED - | |
| | DRAWN - SMF | REVISED - | |
| PLOT SCALE = 40.0000 ' / in. | CHECKED - MR | REVISED - | |
| PLOT DATE = 1/25/2025 | DATE - 1/25/2025 | REVISED - | |

STATE OF ILLINOIS
DEPARTMENT OF TRANSPORTATION

NORTH AURORA ROAD – PENNSBURY LANE TO FRONTENAC ROAD
LIGHT POLE FOUNDATION, OFFSET DETAIL

SCALE: | SHEET 7 OF 12 SHEETS | STA. TO STA.

| F.A.U. RTE. | SECTION | COUNTY | TOTAL SHEETS | SHEET NO. |
|---|---|---|---|---|
| 1509 | 06-00133-00-BR | DuPAGE | 426 | 144 |

CONTRACT NO. 61G79

ILLINOIS FED. AID PROJECT

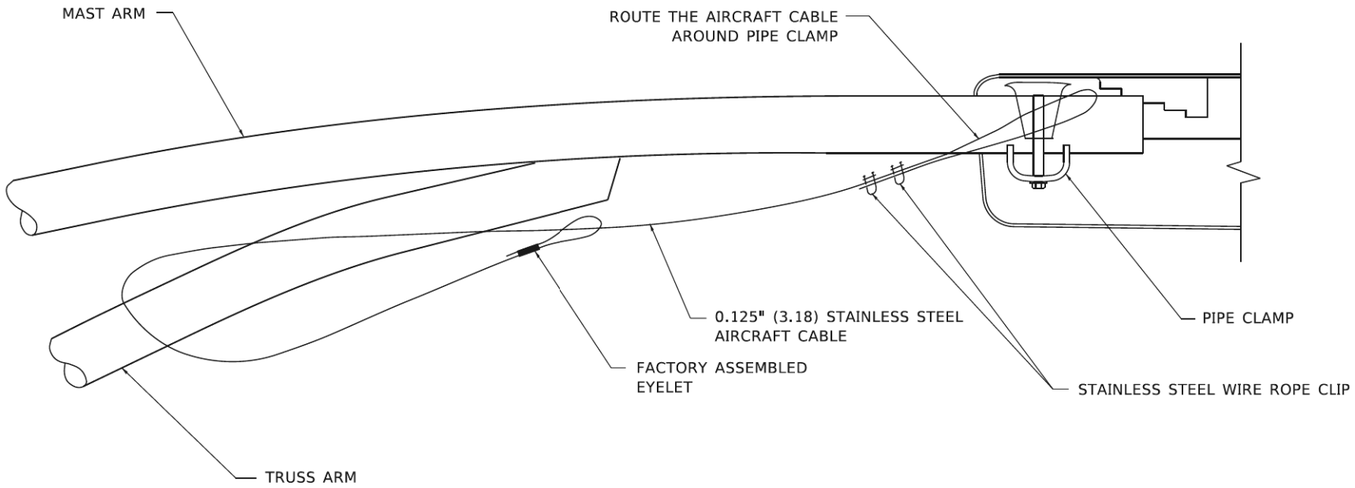


**SIDE VIEW (TRUSS ARM)**
**N.T.S.**

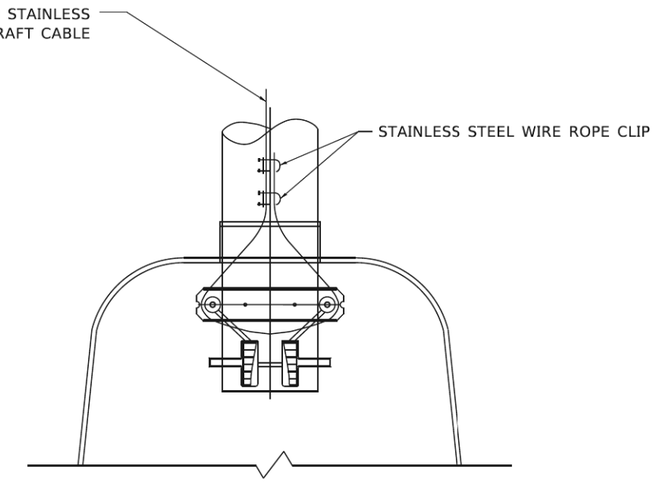


**BOTTOM VIEW**
**N.T.S.**

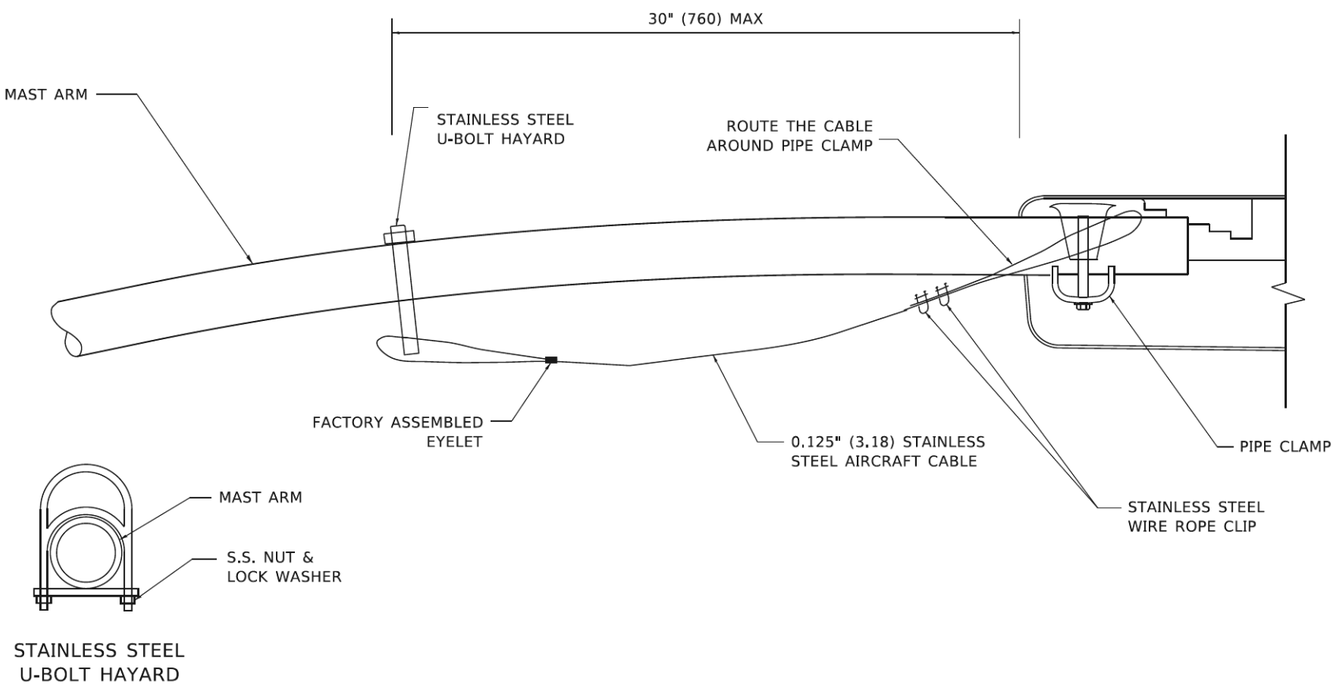


**SIDE VIEW (SINGLE MEMBER OR DAVIT ARM)**
**N.T.S.**

NOTES:

1. ALL DIMENSIONS ARE IN MILLIMETERS (INCHES) UNLESS OTHERWISE SHOWN.
2. CONTRACTOR SHALL ADJUST THE WIRE CLIP TO ELIMINATE ANY SLACK FROM THE WIRE ROPE.
3. THE 0.125" (3.18) STAINLESS STEEL AIRCRAFT CABLE SHALL REMAIN VISIBLE FROM THE GROUND LEVEL.
4. THE BREAKING STRENGTH OF THE CABLE SHALL BE 1700 LBS. MIN.

PLAN — SURVEYED / PLOTTED / ALIGNMENT CHECKED / RT. OF WAY CHECKED / CADD FILE NAME — NOTE BOOK NO. — BY — DATE

PROFILE — SURVEYED / PLOTTED / GRADES CHECKED / BM. NOTED / STRUCTURE NOTAT'NS CHK'D — NOTE BOOK NO. — BY — DATE

FILE NAME = 060092-aht-LIDETAILS

TranSmart
100 S. Wacker Drive Suite 400
Chicago, Illinois 60606

| | | | |
|---|---|---|---|
| USER NAME = brvanderwal | DESIGNED - SMF | REVISED - | |
| | DRAWN - SMF | REVISED - | |
| PLOT SCALE = 40.0000 ' / in. | CHECKED - MR | REVISED - | |
| PLOT DATE = 1/25/2025 | DATE - 1/25/2025 | REVISED - | |

**STATE OF ILLINOIS**
**DEPARTMENT OF TRANSPORTATION**

**NORTH AURORA ROAD – PENNSBURY LANE TO FRONTENAC ROAD**
**LUMINAIRE SAFTEY CABLE DETAILS**

SCALE: | SHEET 8 OF 12 SHEETS | STA. TO STA.

| F.A.U. RTE. | SECTION | COUNTY | TOTAL SHEETS | SHEET NO. |
|---|---|---|---|---|
| 1509 | 06-00133-00-BR | DuPAGE | 426 | 145 |

CONTRACT NO. 61G79

ILLINOIS FED. AID PROJECT

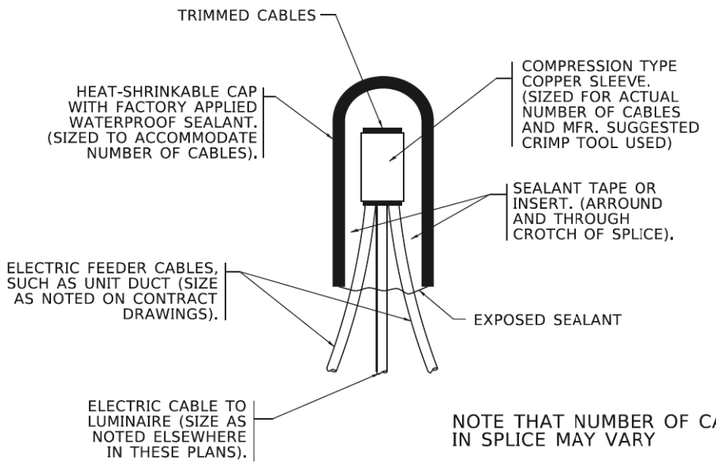


**TYPICAL SPLICE DETAIL**

**N.T.S.**

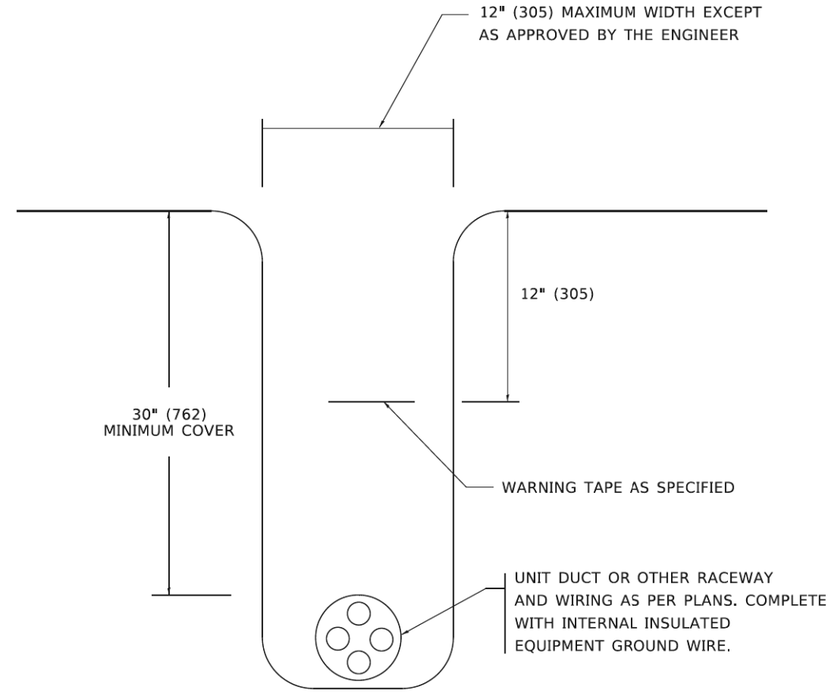


**TYPICAL WIRING IN TRENCH DETAIL**

**N.T.S.**

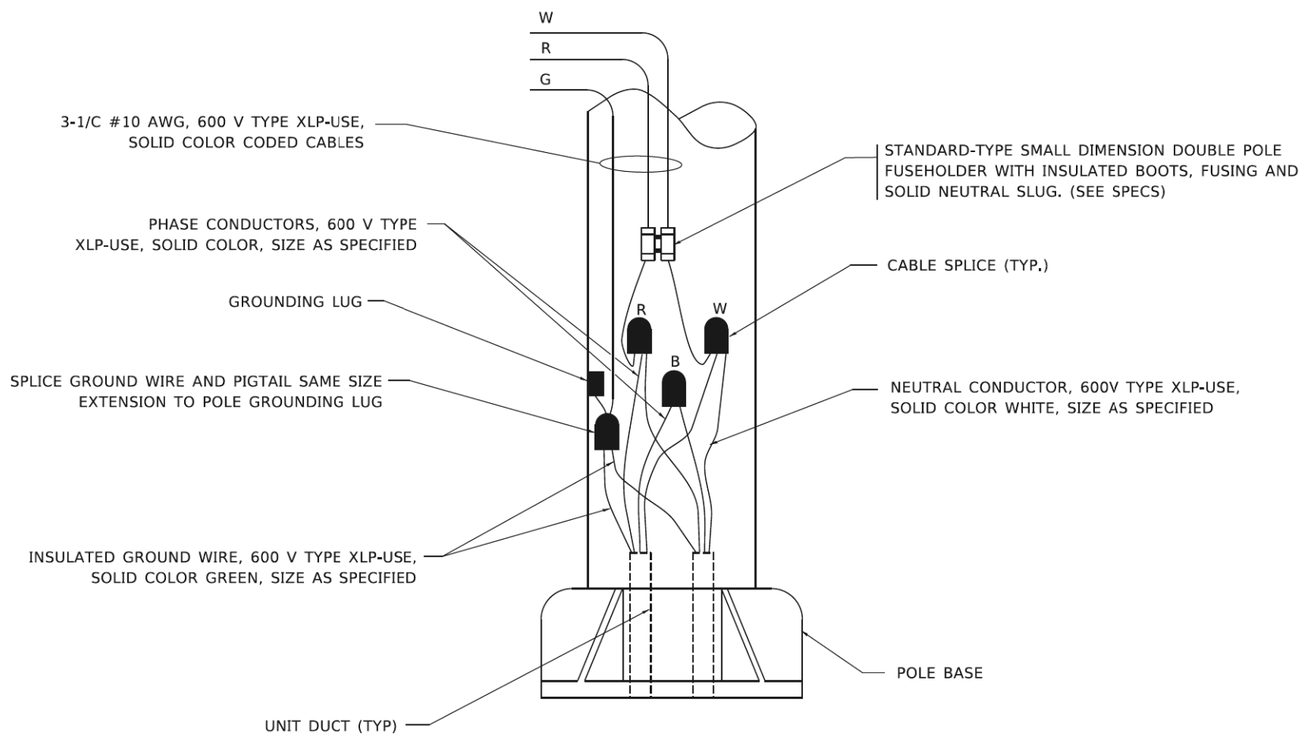


**POLE WIRING DETAIL**

**N.T.S.**

| PLAN | BY | DATE |
|---|---|---|
| SURVEYED | | |
| PLOTTED | | |
| ALIGNMENT CHECKED | | |
| RT. OF WAY CHECKED | | |
| CADD FILE NAME | | |
| NOTE BOOK NO. | | |

| PROFILE | BY | DATE |
|---|---|---|
| SURVEYED | | |
| PLOTTED | | |
| GRADES CHECKED | | |
| B.M. NOTED | | |
| STRUCTURE NOTATNS CHKD | | |
| NOTE BOOK NO. | | |

FILE NAME = 060092-sht-LIDETAILS

TranSmart
100 S. Wacker Drive Suite 400
Chicago, Illinois 60606

| | | | |
|---|---|---|---|
| USER NAME = brvanderwal | DESIGNED - SMF | REVISED - | |
| | DRAWN - SMF | REVISED - | |
| PLOT SCALE = 40.0000 ' / in. | CHECKED - MR | REVISED - | |
| PLOT DATE = 1/25/2025 | DATE - 1/25/2025 | REVISED - | |

**STATE OF ILLINOIS**
**DEPARTMENT OF TRANSPORTATION**

**NORTH AURORA ROAD – PENNSBURY LANE TO FRONTENAC ROAD**
**MISC. ELECTRICAL DETAILS**

SCALE: | SHEET 9 OF 12 SHEETS | STA. TO STA.

| F.A.U. RTE. | SECTION | COUNTY | TOTAL SHEETS | SHEET NO. |
|---|---|---|---|---|
| 1509 | 06-00133-00-BR | DuPAGE | 426 | 146 |
| | | CONTRACT NO. 61G79 | | |
| | | ILLINOIS FED. AID PROJECT | | |

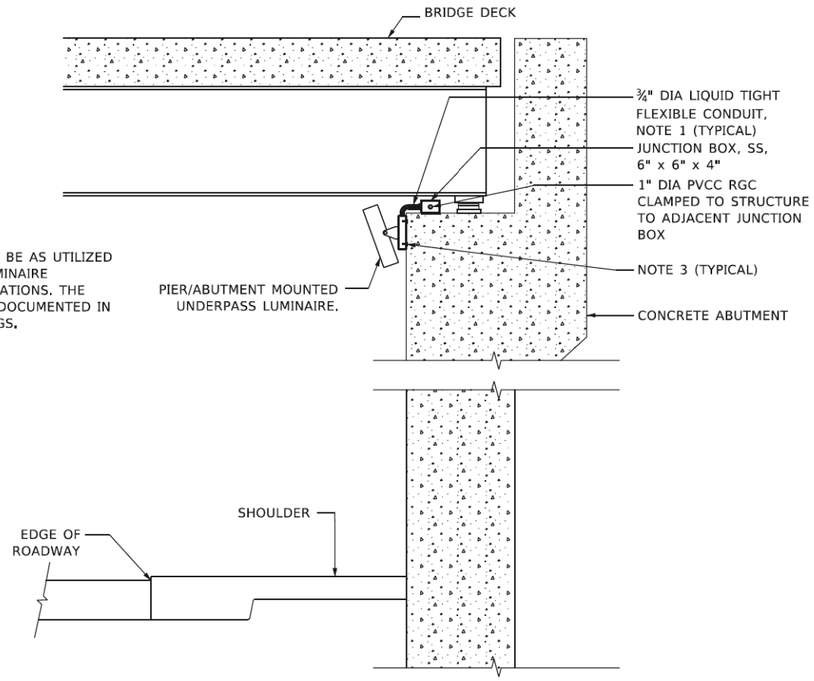


NOTE:

LUMINAIRE TILT SHALL BE AS UTILIZED IN THE APPROVED LUMINAIRE PHOTOMETRIC CALCULATIONS. THE TILT ANGLE MUST BE DOCUMENTED IN THE RECORD DRAWINGS.

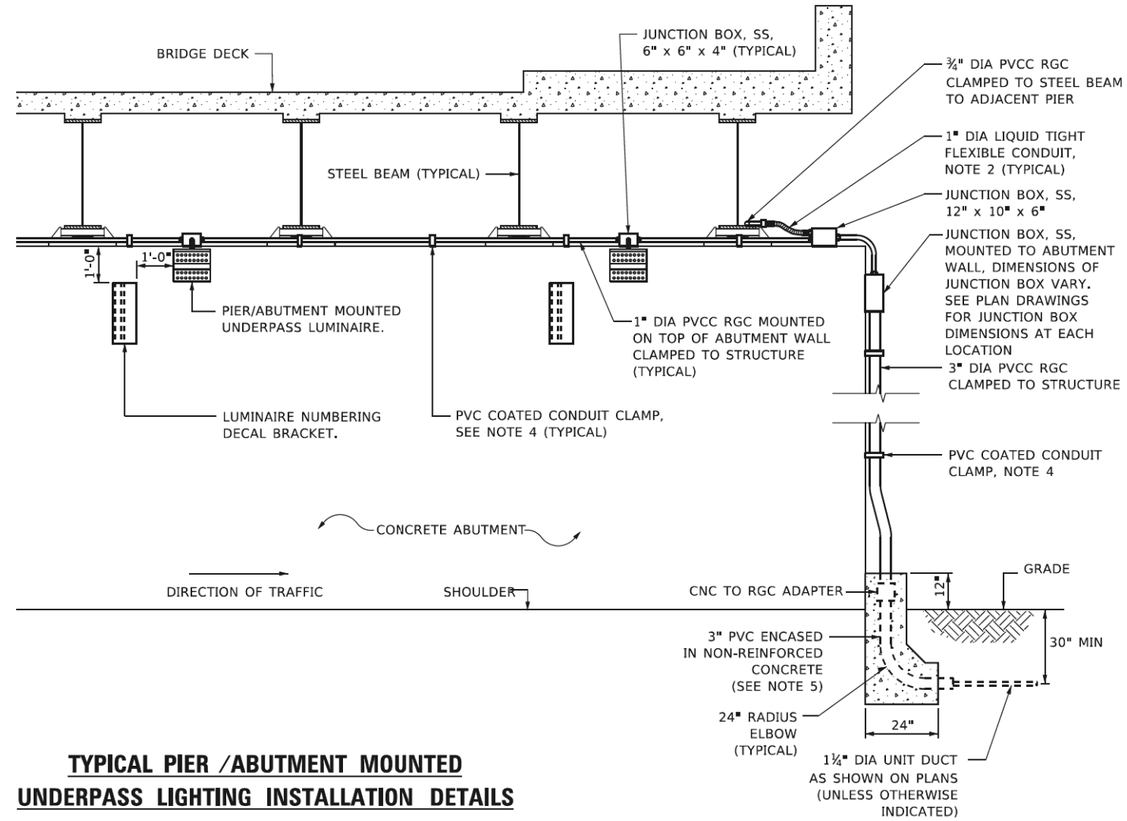


## TYPICAL PIER /ABUTMENT MOUNTED UNDERPASS LIGHTING INSTALLATION DETAILS

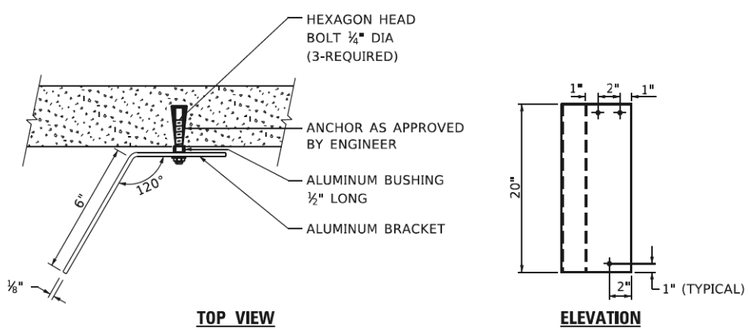


TOP VIEW

ELEVATION

## LUMINAIRE NUMBERING DECAL BRACKET

NOT TO SCALE

**PVC COATED CONDUIT BEAM CLAMP**

NOT TO SCALE

**PVC COATED CONDUIT CLAMP**

NOT TO SCALE

NOTES:

1. LIQUID TIGHT FLEXIBLE METAL CONDUIT, MAXIMUM LENGTH 6'-0", TYPICAL FOR EACH INSTANCE AS SHOWN. PROVIDE PVC COATED RIGID GALVANIZED STEEL CONDUIT AS REQUIRED NOT TO EXCEED 6'-0" OF FLEXIBLE LIQUID TIGHT METAL CONDUIT. LIQUID TIGHT FLEXIBLE METAL CONDUIT WILL BE INCLUDED IN THE COST OF THE CONDUIT ATTACHED TO STRUCTURE, OF THE CORRESPONDING DIA., GALVANIZED STEEL, PVC COATED PAY ITEM EXCEPT THAT THE COST OF THE " DIA. RIGID STEEL CONDUIT AND " DIA. FLEXIBLE CONDUIT SHALL BE INCLUDED IN THE LUMINAIRE INSTALLATION.
2. SEE UNDERPASS LIGHTING PLANS FOR INSTALLATION LOCATION OF UNDERPASS LIGHTING LUMINAIRES.
3. UNDERPASS LUMINAIRE MOUNTED TO FACE OF PIER OR ABUTMENT WALL WITH ½" ALUMINUM SPACERS. MOUNTING HEIGHT OF 1" BELOW THE TOP OF PIER OR ABUTMENT WALL TYPICAL FOR ALL PIER/ABUTMENT MOUNTED UNDERPASS LUMINAIRES UNLESS OTHERWISE NOTED.
4. EXPANSION ANCHOR, POWDER ACTUATED FASTENERS WILL NOT BE ALLOWED. EXPANSION ANCHOR MUST BE SIZED IN ACCORDANCE WITH MANUFACTURERS REQUIREMENTS.
5. SECURE THE CONDUIT WITH PVC COATED CONDUIT CLAMPS OR CONDUIT BEAM CLAMPS AS SHOWN AT 5'-0" INTERVALS FOR LATERALS AND WITHIN 2'-0" MAXIMUM FROM ANY JUNCTION BOX, FLEXIBLE CONDUIT, OR CHANGE IN DIRECTION. ALL PVC COATED CONDUIT CLAMPS OR BEAM CLAMPS SHALL BE INCLUDED WITH THE COST OF THE "CONDUIT ATTACHED TO STRUCTURE, OF THE CORRESPONDING DIA., GALVANIZED STEEL, PVC COATED" PAY ITEM.
6. THE CONCRETE ENCASED CONDUIT TRANSITION SHALL BE INCLUDED IN THE COST OF THE GALVANIZED RIGID STEEL CONDUIT PAY ITEMS.
7. ALL CONDUIT ATTACHED TO STRUCTURE SHALL BE PVC COATED RIGID STEEL CONDUIT (PVCC RGC) TYPICAL.

| PLAN | | BY | DATE |
|---|---|---|---|
| NOTE BOOK NO. ____ | SURVEYED / PLOTTED / ALIGNMENT CHECKED / RT. OF WAY CHECKED / CADD FILE NAME | | |

| PROFILE | | BY | DATE |
|---|---|---|---|
| NOTE BOOK NO. ____ | SURVEYED / PLOTTED / GRADES CHECKED / B.M. NOTED / STRUCTURE NOTAT'NS CHKD | | |

FILE NAME = 060092-sht-LTDETAILS

TranSmart
100 S. Wacker Drive Suite 400
Chicago, Illinois 60606

| | | | |
|---|---|---|---|
| USER NAME = brvanderwal | DESIGNED - SMF | REVISED - | |
| | DRAWN - SMF | REVISED - | |
| PLOT SCALE = 40.0000 ' / in. | CHECKED - MR | REVISED - | |
| PLOT DATE = 1/25/2025 | DATE - 1/25/2025 | REVISED - | |

STATE OF ILLINOIS
DEPARTMENT OF TRANSPORTATION

NORTH AURORA ROAD – PENNSBURY LANE TO FRONTENAC ROAD
PIER/ABUTMENT MOUNTED UNDERPASS LUMINAIRE INSTALL DETAILS

SCALE: | SHEET 10 OF 12 SHEETS | STA. TO STA.

| F.A.U. RTE. | SECTION | COUNTY | TOTAL SHEETS | SHEET NO. |
|---|---|---|---|---|
| 1509 | 06-00133-00-BR | DuPAGE | 426 | 147 |
| | | CONTRACT NO. 61G79 | | |
| | | ILLINOIS FED. AID PROJECT | | |

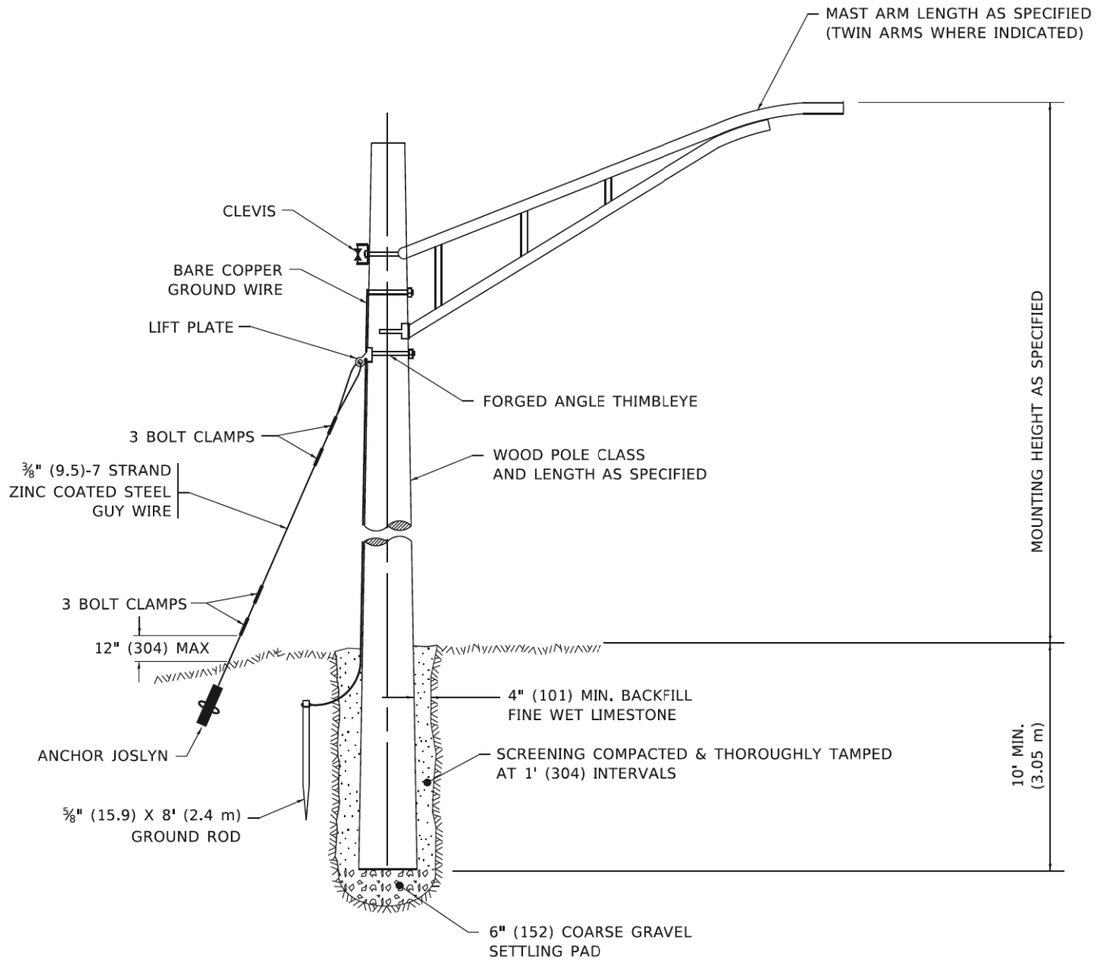


# TEMPORARY LIGHT POLE DETAIL

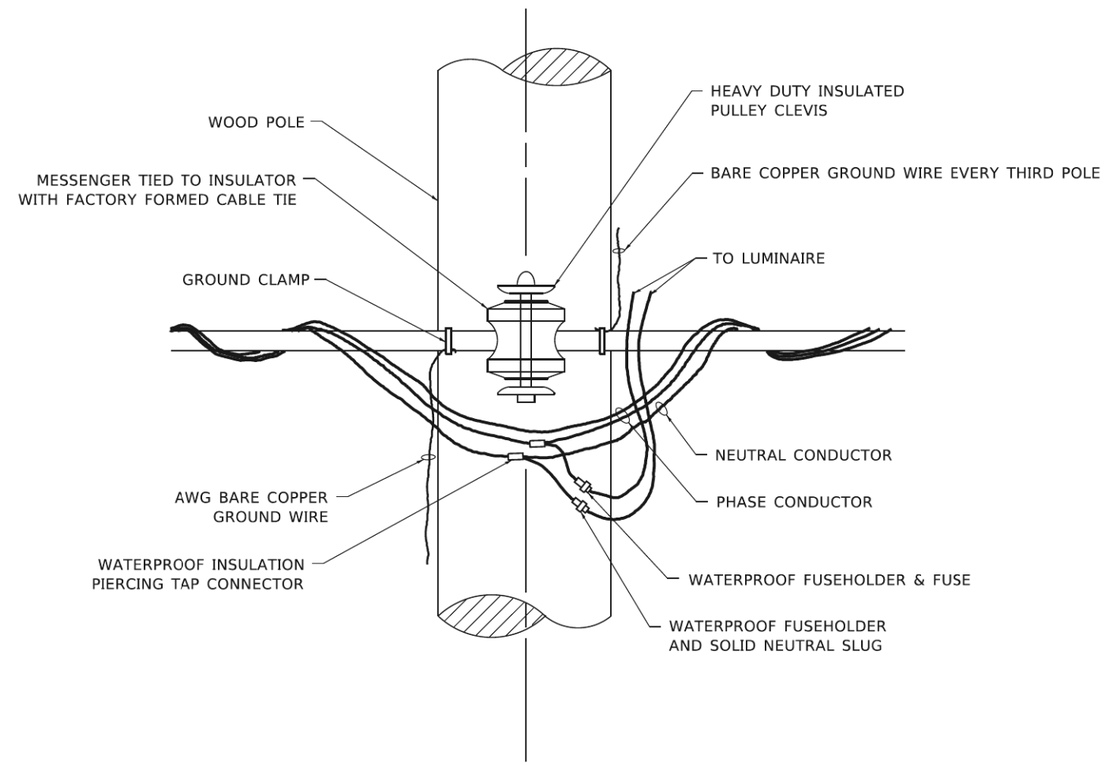


# TEMPORARY LIGHT POLE ATTACHMENT DETAIL

NOTE:

1. ALL DIMENSIONS IN INCHES (MILLIMETERS) UNLESS OTHERWISE INDICATED.
2. MAST ARM SHALL BE RATED FOR THE SPECIFIED MOUNTING HEIGHT.

| PLAN | BY | DATE |
|---|---|---|
| SURVEYED | | |
| PLOTTED | | |
| ALIGNMENT CHECKED | | |
| RT. OF WAY CHECKED | | |
| CADD FILE NAME | | |
| NOTE BOOK NO. | | |

| PROFILE | BY | DATE |
|---|---|---|
| SURVEYED | | |
| PLOTTED | | |
| GRADES CHECKED | | |
| BLM. NOTED | | |
| STRUCTURE NOTATNS CHKD | | |
| NOTE BOOK NO. | | |

FILE NAME = 060092-ant-LTDETAILS

TranSmart
100 S. Wacker Drive Suite 400
Chicago, Illinois 60606

| | | | |
|---|---|---|---|
| USER NAME = brvanderwal | DESIGNED - SMF | REVISED - | |
| | DRAWN - SMF | REVISED - | |
| PLOT SCALE = 40.0000 ' / in. | CHECKED - MR | REVISED - | |
| PLOT DATE = 1/25/2025 | DATE - 1/25/2025 | REVISED - | |

STATE OF ILLINOIS
DEPARTMENT OF TRANSPORTATION

NORTH AURORA ROAD – PENNSBURY LANE TO FRONTENAC ROAD
TEMPORARY LIGHT POLE DETAILS

SCALE: | SHEET 11 OF 12 SHEETS | STA. TO STA.

| F.A.U. RTE. | SECTION | COUNTY | TOTAL SHEETS | SHEET NO. |
|---|---|---|---|---|
| 1509 | 06-00133-00-BR | DuPAGE | 426 | 148 |

CONTRACT NO. 61G79

ILLINOIS FED. AID PROJECT

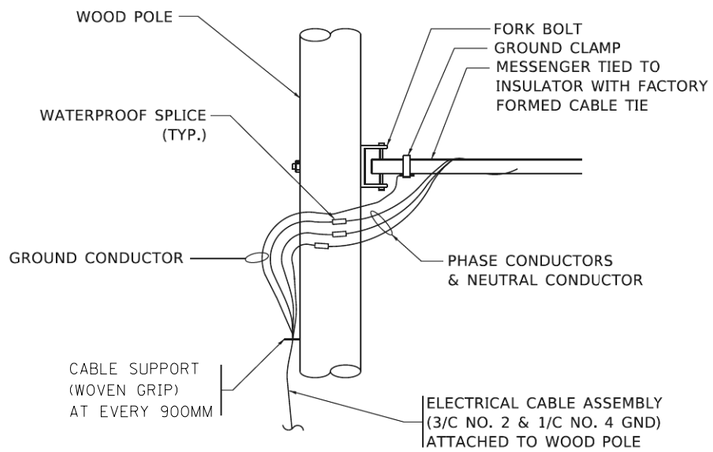


**AERIAL CABLE CONNECTION DETAIL**

N.T.S.

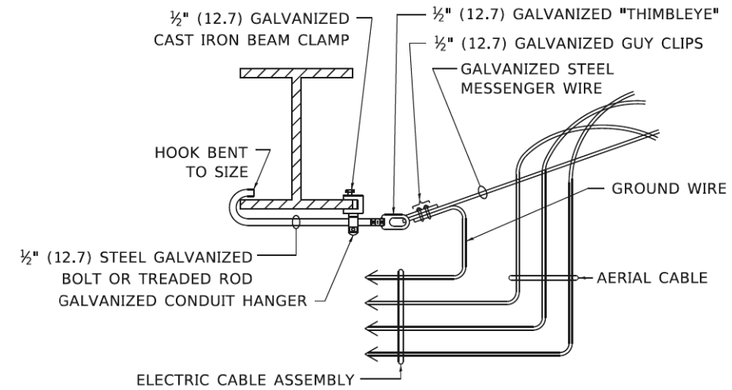


**AERIAL CABLE ATTACHED TO STRUCTURE**

NOT TO SCALE

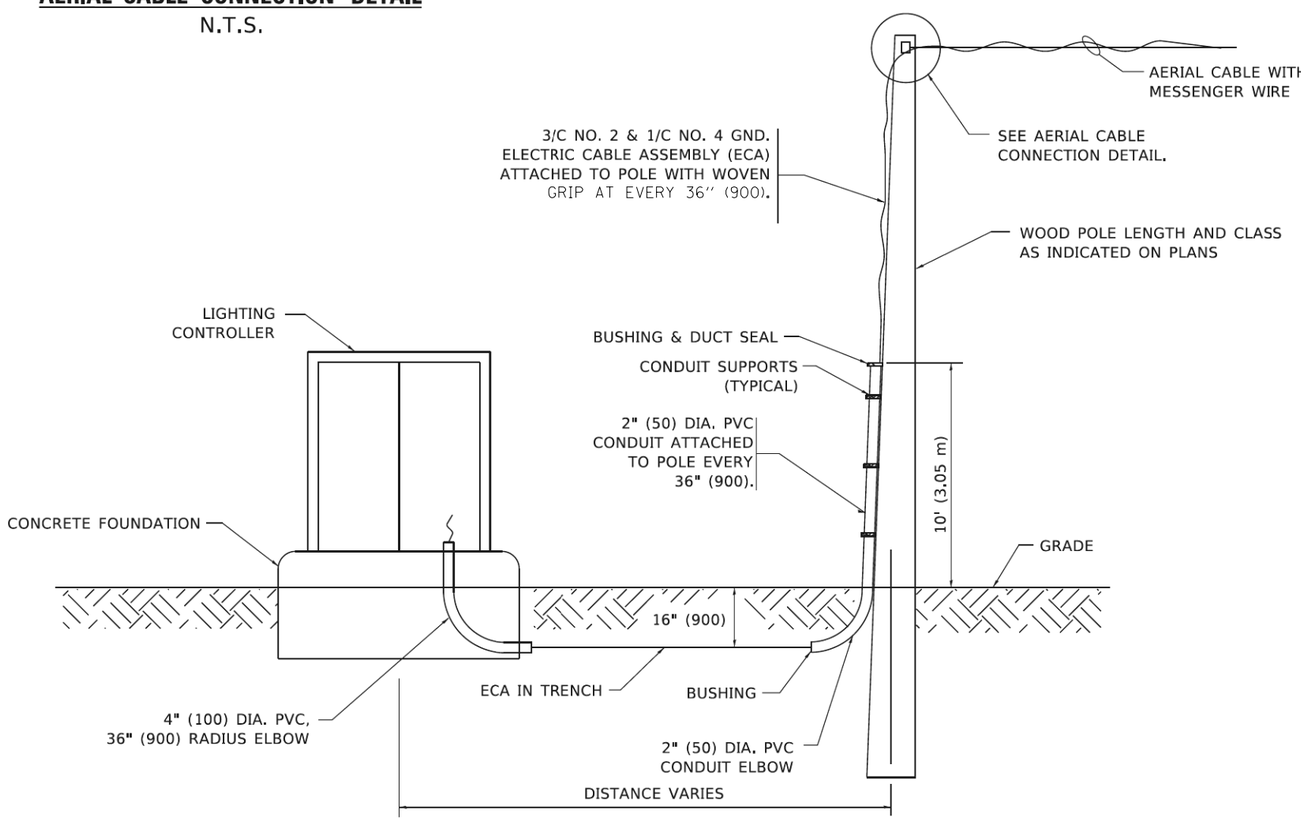


**WOOD POLE TO LIGHTING CONTROLLER WIRING CONNECTION DETAIL**

N.T.S.

NOTES:

1. ALL DIMENSIONS IN INCHES (MILLIMETERS) UNLESS OTHERWISE INDICATED.
2. SEE PROPOSED LIGHTING PLAN FOR CONDUIT, CABLE AND ROUTING.
3. THE CONTRACTOR SHALL PROVIDE INTERMEDIATE SUPPORTS TO MAINTAIN MINIMUM CLEARANCES. REFER TO AERIAL AERIAL CABLE ATTACHED TO STRUCTURE DETAIL.
4. COST OF SPLICES AND MOUNTING HARDWARE SHALL BE INCLUDED IN THE UNIT PRICE FOR AERIAL CABLE.

| PLAN | BY | DATE |
|---|---|---|
| SURVEYED | | |
| PLOTTED | | |
| ALIGNMENT CHECKED | | |
| RT. OF WAY CHECKED | | |
| CADD FILE NAME | | |
| NOTE BOOK NO. | | |

| PROFILE | BY | DATE |
|---|---|---|
| SURVEYED | | |
| PLOTTED | | |
| GRADES CHECKED | | |
| BM. NOTED | | |
| STRUCTURE NOTAT'NS CHK'D | | |
| NOTE BOOK NO. | | |

FILE NAME = 060092-aht-LTDETAILS

TranSmart
100 S. Wacker Drive Suite 400
Chicago, Illinois 60606

| | | | |
|---|---|---|---|
| USER NAME = brvanderwal | DESIGNED - SMF | REVISED - | |
| | DRAWN - SMF | REVISED - | |
| PLOT SCALE = 40.0000 ' / in. | CHECKED - MR | REVISED - | |
| PLOT DATE = 1/25/2025 | DATE - 1/25/2025 | REVISED - | |

**STATE OF ILLINOIS**
**DEPARTMENT OF TRANSPORTATION**

**NORTH AURORA ROAD – PENNSBURY LANE TO FRONTENAC ROAD**
**TEMPORARY AERIAL CABLE INSTALLATION DETAILS**

SCALE: SHEET 12 OF 12 SHEETS STA. TO STA.

| F.A.U. RTE. | SECTION | COUNTY | TOTAL SHEETS | SHEET NO. |
|---|---|---|---|---|
| 1509 | 06-00133-00-BR | DuPAGE | 426 | 149 |

CONTRACT NO. 61G79

ILLINOIS FED. AID PROJECT

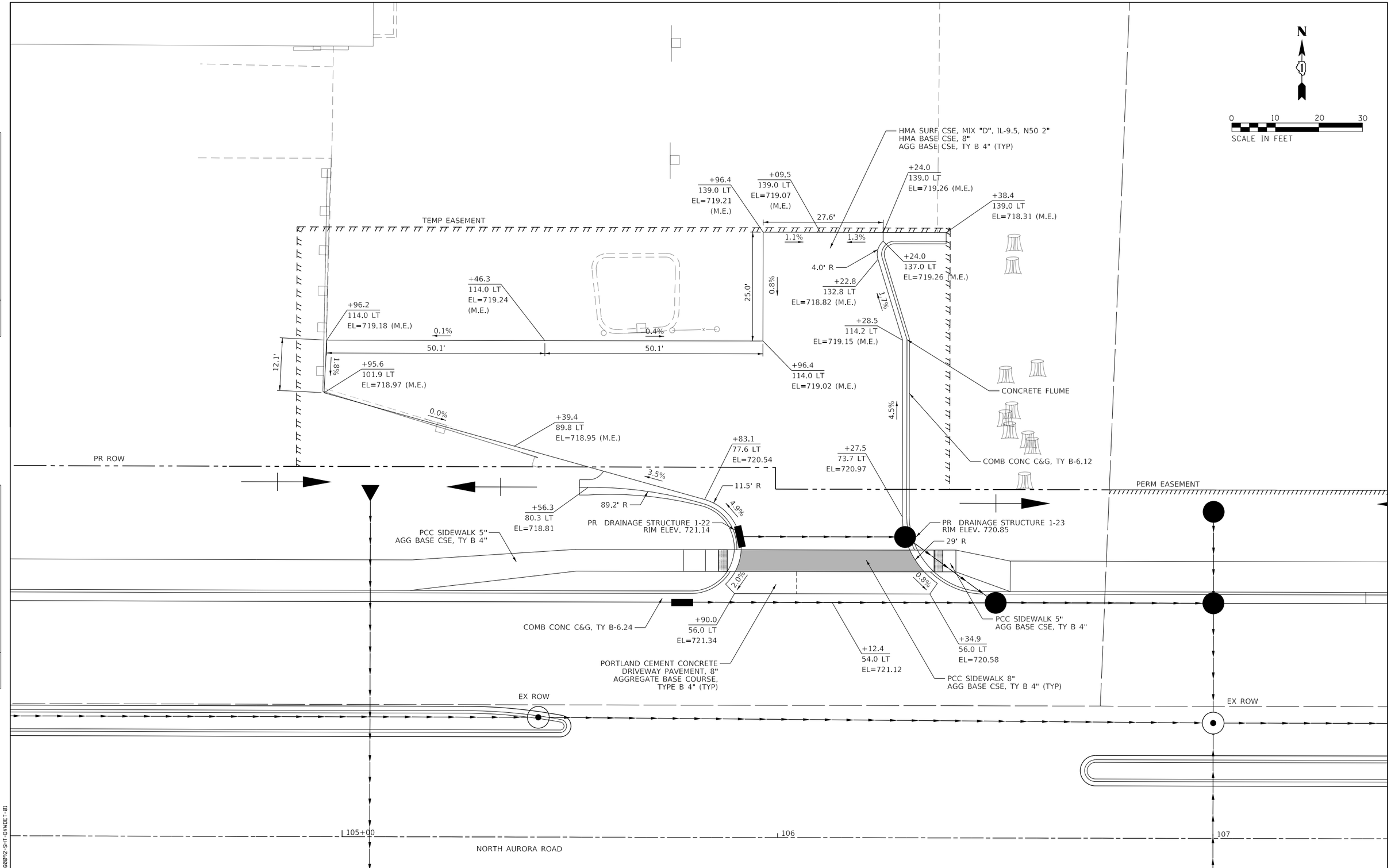


| PLAN | | | BY | DATE |
|---|---|---|---|---|
| NOTE BOOK NO. ____ | SURVEYED | | | |
| | PLOTTED | | | |
| | ALIGNMENT CHECKED | | | |
| | RT. OF WAY CHECKED | | | |
| | CADD FILE NAME | | | |

| PROFILE | | | BY | DATE |
|---|---|---|---|---|
| NOTE BOOK NO. ____ | SURVEYED | | | |
| | PLOTTED | | | |
| | GRADES CHECKED | | | |
| | BM. NOTED | | | |
| | STRUCTURE NOTATNS CHKD | | | |

FILE NAME = 060092-SHT-DVWDET-01

TRANSYSTEMS

| | | |
|---|---|---|
| USER NAME = brvanderwal | DESIGNED - MKW | REVISED - |
| | DRAWN - BMS | REVISED - |
| PLOT SCALE = 20.0000 ' / in. | CHECKED - BVW | REVISED - |
| PLOT DATE = 1/25/2025 | DATE - 1/25/2025 | REVISED - |

**STATE OF ILLINOIS**
**DEPARTMENT OF TRANSPORTATION**

**PROPOSED DRIVEWAY DETAILS**

SCALE: 1"=20' | SHEET 1 OF 3 SHEETS | STA. TO STA.

| F.A.U. RTE. | SECTION | COUNTY | TOTAL SHEETS | SHEET NO. |
|---|---|---|---|---|
| 1509 | 06-00133-00-BR | DuPAGE | 426 | 150 |

CONTRACT NO. 61G79

ILLINOIS FED. AID PROJECT

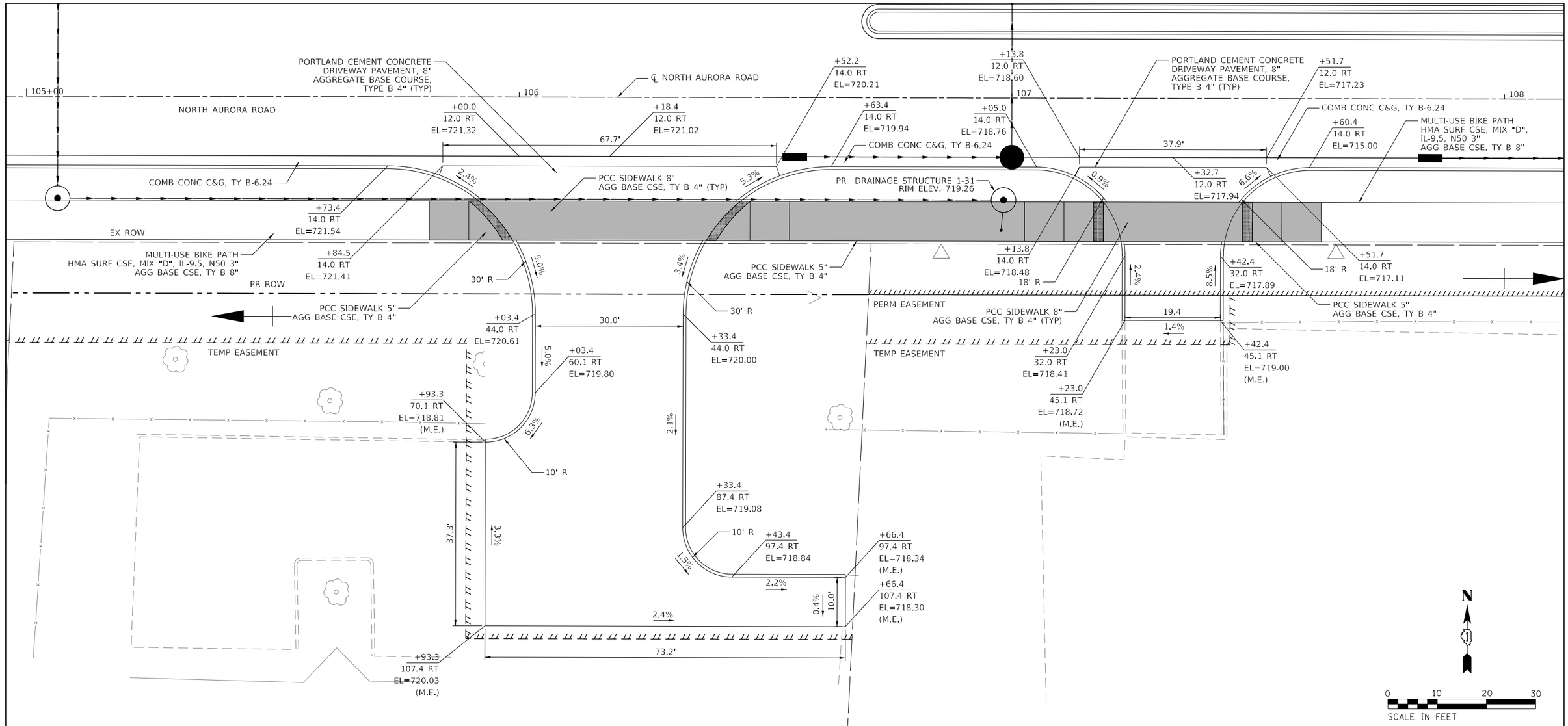


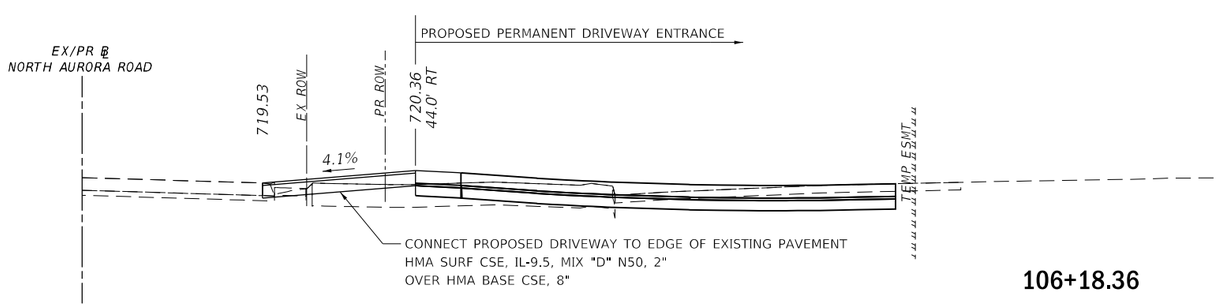


106+18.36

**PRESTAGE CONNECTION TO EXISTING PAVEMENT FROM PROPOSED NAPERVILLE TOWNSHIP HIGHWAY DEPARTMENT DRIVEWAY**

PLAN — NOTE BOOK NO. ____ — SURVEYED / PLOTTED / ALIGNMENT CHECKED / RT. OF WAY CHECKED / CADD FILE NAME — BY — DATE

PROFILE — NOTE BOOK NO. ____ — SURVEYED / PLOTTED / GRADES CHECKED / BM. NOTED / STRUCTURE NOTATNS CHKD — BY — DATE

FILE NAME = 060092-SHT-DIVWDET-02

| | | | |
|---|---|---|---|
| TRANSYSTEMS | USER NAME = brvanderwal | DESIGNED - MKW | REVISED - |
| | | DRAWN - BMS | REVISED - |
| | PLOT SCALE = 20.0000 ' / in. | CHECKED - BVW | REVISED - |
| | PLOT DATE = 1/25/2025 | DATE - 1/25/2025 | REVISED - |

**STATE OF ILLINOIS**
**DEPARTMENT OF TRANSPORTATION**

**PROPOSED DRIVEWAY DETAILS**

SCALE: 1"=20' | SHEET 2 OF 3 SHEETS | STA. TO STA.

| F.A.U. RTE. | SECTION | COUNTY | TOTAL SHEETS | SHEET NO. |
|---|---|---|---|---|
| 1509 | 06-00133-00-BR | DuPAGE | 426 | 151 |

CONTRACT NO. 61G79

ILLINOIS FED. AID PROJECT

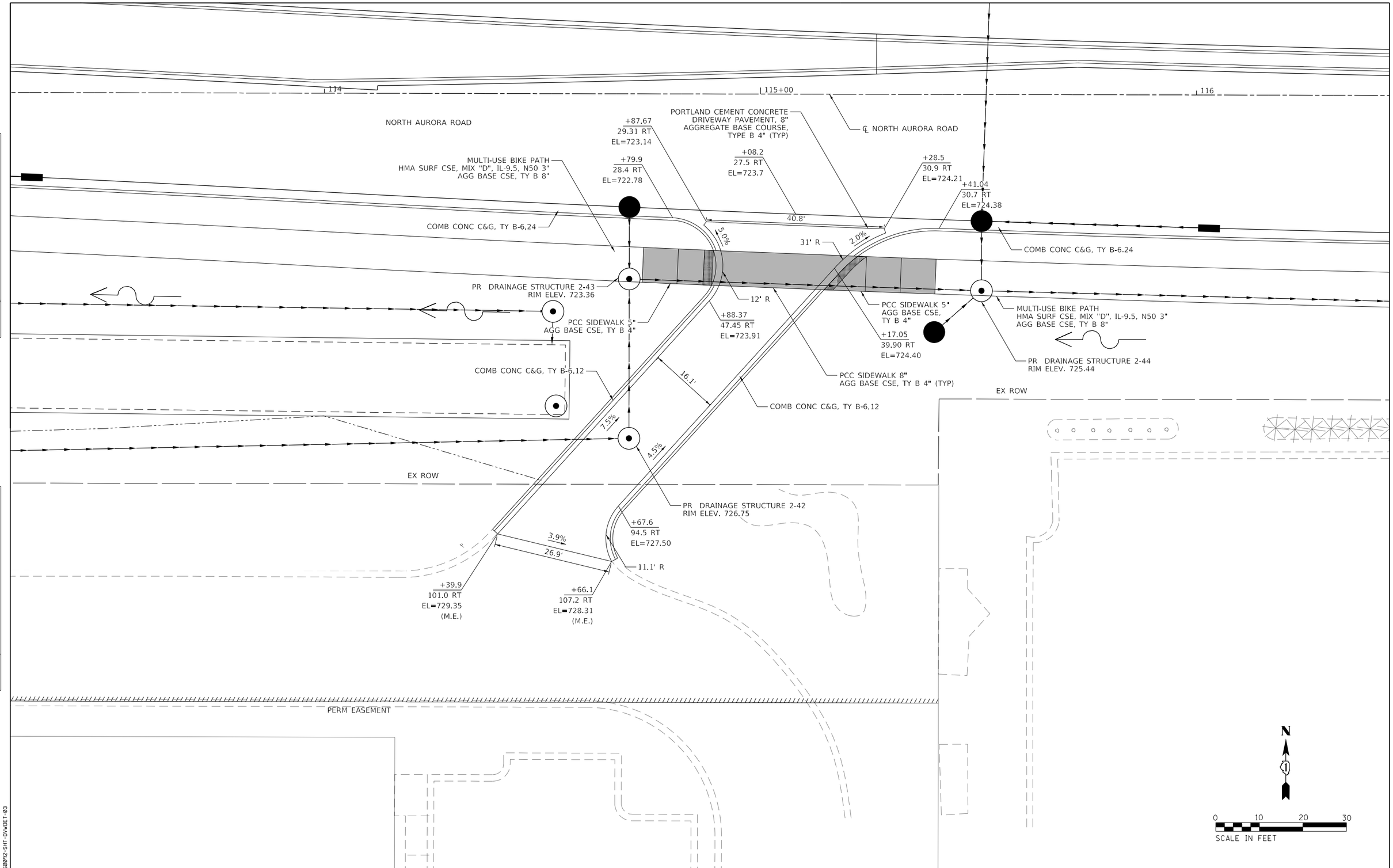


PLAN
NOTE BOOK NO. ____
SURVEYED
PLOTTED
ALIGNMENT CHECKED
RT. OF WAY CHECKED
CADD FILE NAME
BY
DATE

PROFILE
NOTE BOOK NO. ____
SURVEYED
PLOTTED
GRADES CHECKED
B.M. NOTED
STRUCTURE NOTAT'NS CHK'D
BY
DATE

FILE NAME = 060092-SHT-DVWDET-03

TRANSYSTEMS

| | | | |
|---|---|---|---|
| USER NAME = brvanderwal | DESIGNED - MKW | REVISED - | |
| | DRAWN - BMS | REVISED - | |
| PLOT SCALE = 20.0000 ' / in. | CHECKED - BVW | REVISED - | |
| PLOT DATE = 1/25/2025 | DATE - 1/25/2025 | REVISED - | |

**STATE OF ILLINOIS**
**DEPARTMENT OF TRANSPORTATION**

**PROPOSED DRIVEWAY DETAILS**

SCALE: 1"=20' | SHEET 3 OF 3 SHEETS | STA. TO STA.

| F.A.U. RTE. | SECTION | COUNTY | TOTAL SHEETS | SHEET NO. |
|---|---|---|---|---|
| 1509 | 06-00133-00-BR | DuPAGE | 426 | 152 |

CONTRACT NO. 61G79

ILLINOIS FED. AID PROJECT

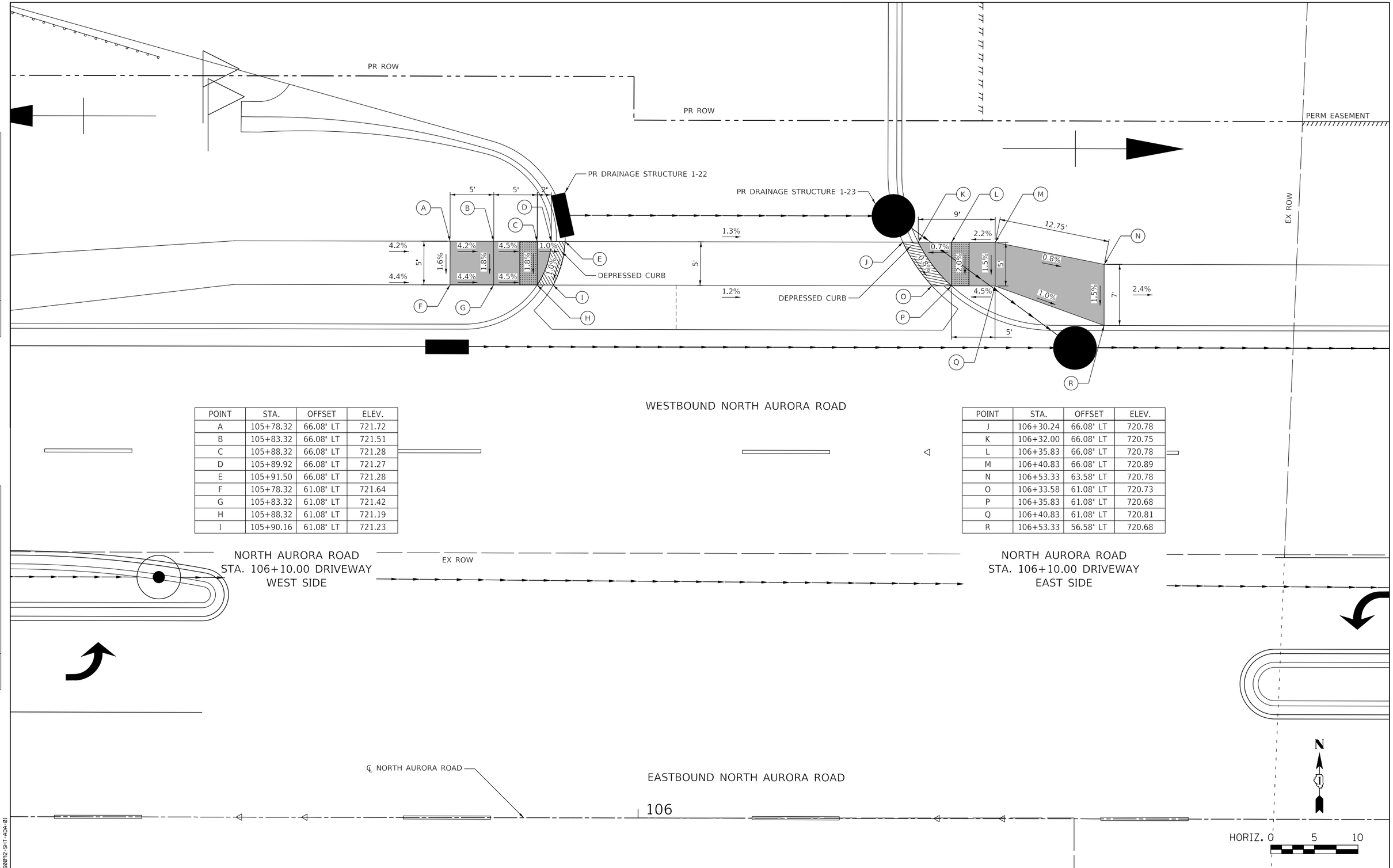


| POINT | STA. | OFFSET | ELEV. |
|---|---|---|---|
| A | 105+78.32 | 66.08' LT | 721.72 |
| B | 105+83.32 | 66.08' LT | 721.51 |
| C | 105+88.32 | 66.08' LT | 721.28 |
| D | 105+89.92 | 66.08' LT | 721.27 |
| E | 105+91.50 | 66.08' LT | 721.28 |
| F | 105+78.32 | 61.08' LT | 721.64 |
| G | 105+83.32 | 61.08' LT | 721.42 |
| H | 105+88.32 | 61.08' LT | 721.19 |
| I | 105+90.16 | 61.08' LT | 721.23 |

| POINT | STA. | OFFSET | ELEV. |
|---|---|---|---|
| J | 106+30.24 | 66.08' LT | 720.78 |
| K | 106+32.00 | 66.08' LT | 720.75 |
| L | 106+35.83 | 66.08' LT | 720.78 |
| M | 106+40.83 | 66.08' LT | 720.89 |
| N | 106+53.33 | 63.58' LT | 720.78 |
| O | 106+33.58 | 61.08' LT | 720.73 |
| P | 106+35.83 | 61.08' LT | 720.68 |
| Q | 106+40.83 | 61.08' LT | 720.81 |
| R | 106+53.33 | 56.58' LT | 720.68 |

PLAN
NOTE BOOK NO. ____
SURVEYED
PLOTTED
ALIGNMENT CHECKED
RT. OF WAY CHECKED
CADD FILE NAME
BY
DATE

PROFILE
NOTE BOOK NO. ____
SURVEYED
PLOTTED
GRADES CHECKED
B.M. NOTED
STRUCTURE NOTATNS CHKD
BY
DATE

FILE NAME = 060092-SHT-ADA-01

TRANSYSTEMS

| | | |
|---|---|---|
| USER NAME = brvanderwal | DESIGNED - MKW | REVISED - |
| | DRAWN - BMS | REVISED - |
| PLOT SCALE = 10.0000 ' / in. | CHECKED - BVW | REVISED - |
| PLOT DATE = 1/25/2025 | DATE - 1/25/2025 | REVISED - |

**STATE OF ILLINOIS**
**DEPARTMENT OF TRANSPORTATION**

**NORTH AURORA ROAD**
**PENNSBURY LANE TO FRONTENAC ROAD**
**ADA DETAILS – DRIVEWAY STA. 106+10.00**

SCALE: 1"=10' | SHEET 1 OF 5 SHEETS | STA. TO STA.

| F.A.U. RTE. | SECTION | COUNTY | TOTAL SHEETS | SHEET NO. |
|---|---|---|---|---|
| 1509 | 06-00133-00-BR | DuPAGE | 426 | 153 |

CONTRACT NO. 61G79

ILLINOIS FED. AID PROJECT

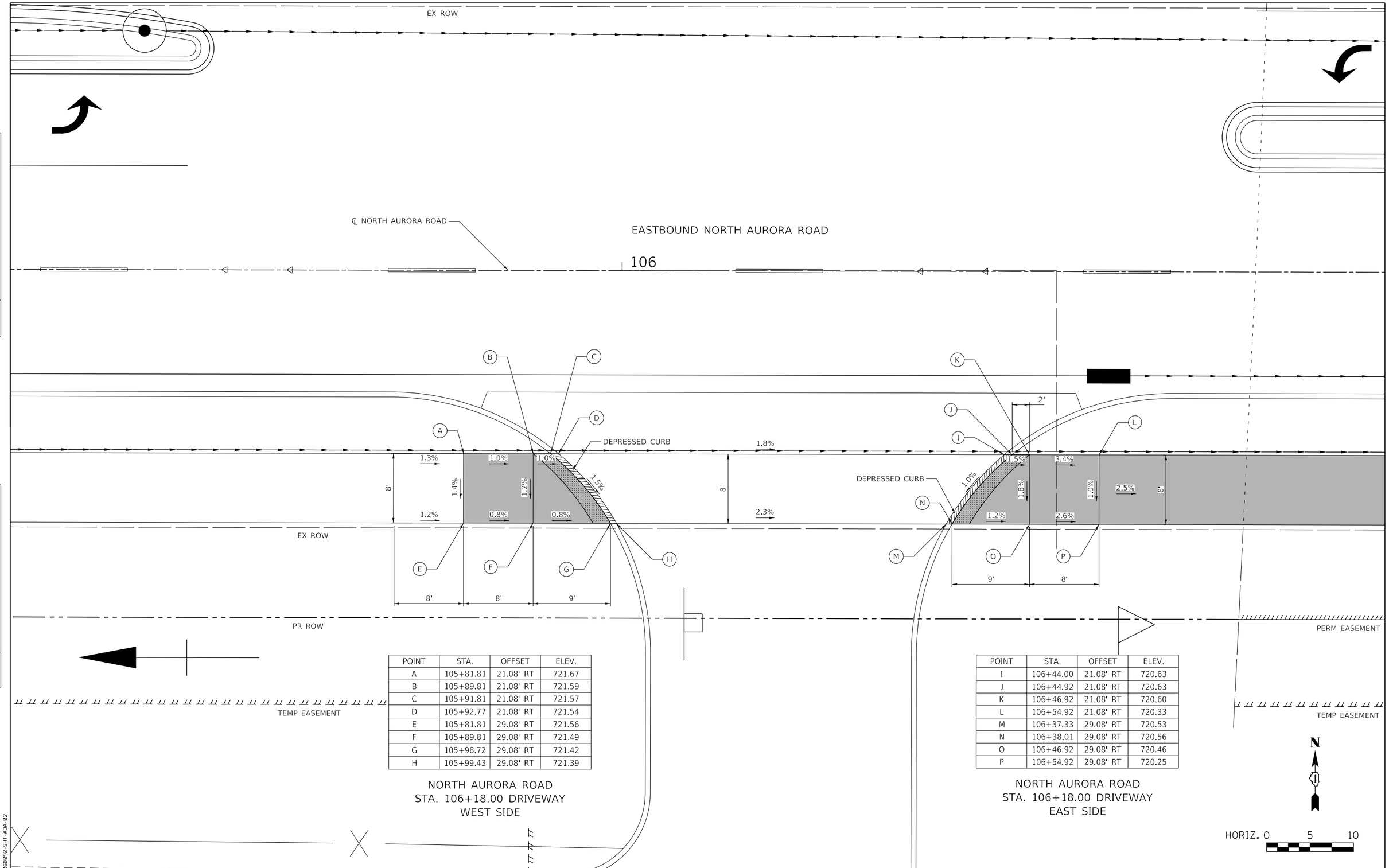


| POINT | STA. | OFFSET | ELEV. |
|---|---|---|---|
| A | 105+81.81 | 21.08' RT | 721.67 |
| B | 105+89.81 | 21.08' RT | 721.59 |
| C | 105+91.81 | 21.08' RT | 721.57 |
| D | 105+92.77 | 21.08' RT | 721.54 |
| E | 105+81.81 | 29.08' RT | 721.56 |
| F | 105+89.81 | 29.08' RT | 721.49 |
| G | 105+98.72 | 29.08' RT | 721.42 |
| H | 105+99.43 | 29.08' RT | 721.39 |

NORTH AURORA ROAD
STA. 106+18.00 DRIVEWAY
WEST SIDE

| POINT | STA. | OFFSET | ELEV. |
|---|---|---|---|
| I | 106+44.00 | 21.08' RT | 720.63 |
| J | 106+44.92 | 21.08' RT | 720.63 |
| K | 106+46.92 | 21.08' RT | 720.60 |
| L | 106+54.92 | 21.08' RT | 720.33 |
| M | 106+37.33 | 29.08' RT | 720.53 |
| N | 106+38.01 | 29.08' RT | 720.56 |
| O | 106+46.92 | 29.08' RT | 720.46 |
| P | 106+54.92 | 29.08' RT | 720.25 |

NORTH AURORA ROAD
STA. 106+18.00 DRIVEWAY
EAST SIDE

PLAN
NOTE BOOK NO. ____
SURVEYED
PLOTTED
ALIGNMENT CHECKED
RT. OF WAY CHECKED
CADD FILE NAME
BY
DATE

PROFILE
NOTE BOOK NO. ____
SURVEYED
PLOTTED
GRADES CHECKED
B.M. NOTED
STRUCTURE NOTATNS CHK'D
BY
DATE

FILE NAME = 060092-SHT-ADA-02

TRANSYSTEMS

| | | |
|---|---|---|
| USER NAME = brvanderwal | DESIGNED - MKW | REVISED - |
| | DRAWN - BMS | REVISED - |
| PLOT SCALE = 10.0000 ' / in. | CHECKED - BVW | REVISED - |
| PLOT DATE = 1/25/2025 | DATE - 1/25/2025 | REVISED - |

**STATE OF ILLINOIS**
**DEPARTMENT OF TRANSPORTATION**

**NORTH AURORA ROAD**
**PENNSBURY LANE TO FRONTENAC ROAD**
**ADA DETAILS – DRIVEWAY STA. 106+18.00**

SCALE: 1"=10' | SHEET 2 OF 5 SHEETS | STA. TO STA.

| F.A.U. RTE. | SECTION | COUNTY | TOTAL SHEETS | SHEET NO. |
|---|---|---|---|---|
| 1509 | 06-00133-00-BR | DuPAGE | 426 | 154 |

CONTRACT NO. 61G79

ILLINOIS FED. AID PROJECT

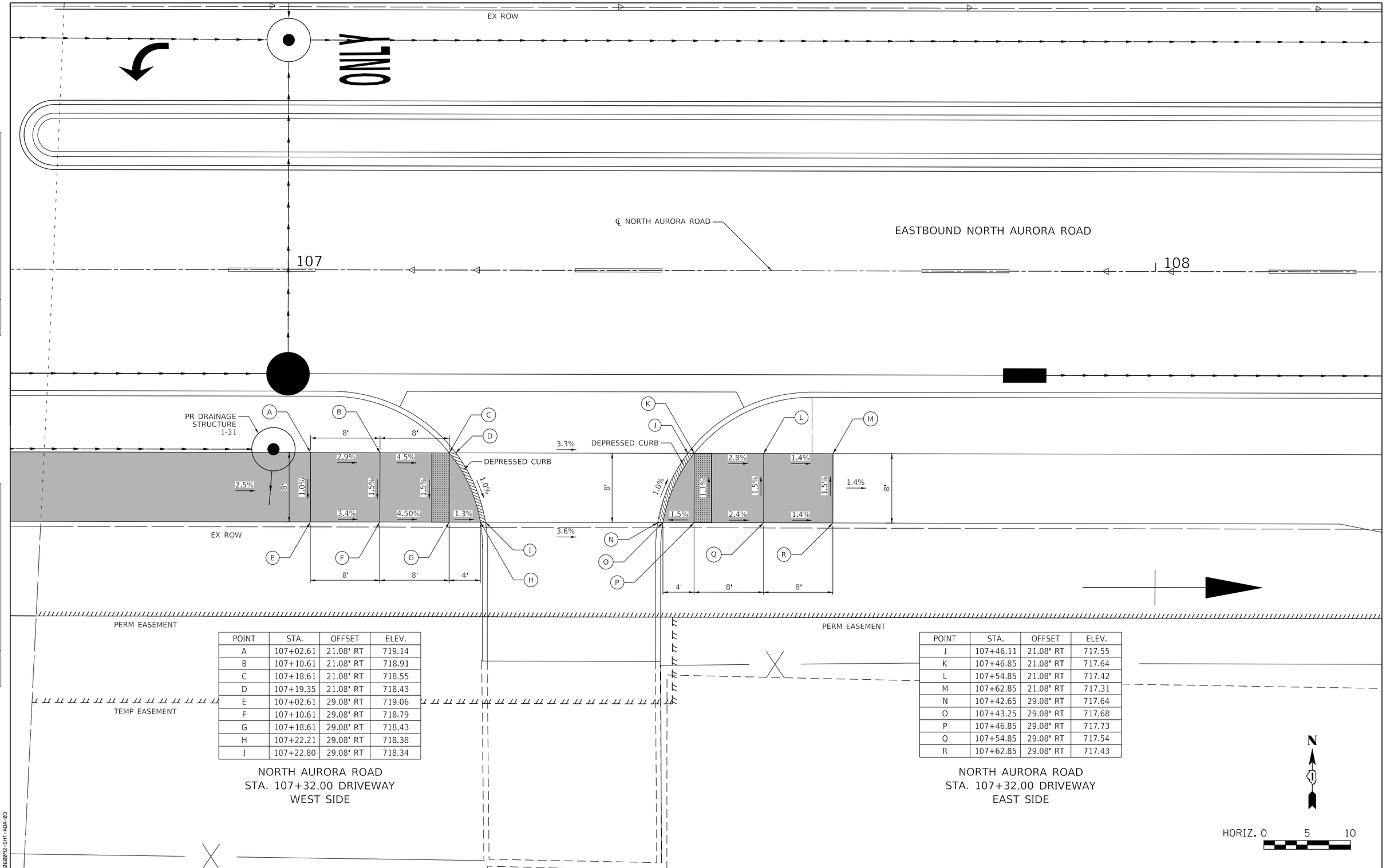


| POINT | STA. | OFFSET | ELEV. |
|---|---|---|---|
| A | 107+02.61 | 21.08' RT | 719.14 |
| B | 107+10.61 | 21.08' RT | 718.91 |
| C | 107+18.61 | 21.08' RT | 718.55 |
| D | 107+19.35 | 21.08' RT | 718.43 |
| E | 107+02.61 | 29.08' RT | 719.06 |
| F | 107+10.61 | 29.08' RT | 718.79 |
| G | 107+18.61 | 29.08' RT | 718.43 |
| H | 107+22.21 | 29.08' RT | 718.38 |
| I | 107+22.80 | 29.08' RT | 718.34 |

NORTH AURORA ROAD
STA. 107+32.00 DRIVEWAY
WEST SIDE

| POINT | STA. | OFFSET | ELEV. |
|---|---|---|---|
| J | 107+46.11 | 21.08' RT | 717.55 |
| K | 107+46.85 | 21.08' RT | 717.64 |
| L | 107+54.85 | 21.08' RT | 717.42 |
| M | 107+62.85 | 21.08' RT | 717.31 |
| N | 107+42.65 | 29.08' RT | 717.64 |
| O | 107+43.25 | 29.08' RT | 717.68 |
| P | 107+46.85 | 29.08' RT | 717.73 |
| Q | 107+54.85 | 29.08' RT | 717.54 |
| R | 107+62.85 | 29.08' RT | 717.43 |

NORTH AURORA ROAD
STA. 107+32.00 DRIVEWAY
EAST SIDE

PLAN
NOTE BOOK NO. ____
SURVEYED
PLOTTED
ALIGNMENT CHECKED
RT. OF WAY CHECKED
CADD FILE NAME
BY
DATE

PROFILE
NOTE BOOK NO. ____
SURVEYED
PLOTTED
GRADES CHECKED
BM. NOTED
STRUCTURE NOTATNS CHKD
BY
DATE

FILE NAME = 060092-SHT-ADA-03

TRANSYSTEMS

| | | |
|---|---|---|
| USER NAME = brvanderwal | DESIGNED - MKW | REVISED - |
| | DRAWN - BMS | REVISED - |
| PLOT SCALE = 10.0000 ' / in. | CHECKED - BVW | REVISED - |
| PLOT DATE = 1/25/2025 | DATE - 1/25/2025 | REVISED - |

**STATE OF ILLINOIS**
**DEPARTMENT OF TRANSPORTATION**

**NORTH AURORA ROAD**
**PENNSBURY LANE TO FRONTENAC ROAD**
**ADA DETAILS – DRIVEWAY STA. 107+32.00**

SCALE: 1"=10' | SHEET 3 OF 5 SHEETS | STA. TO STA.

| F.A.U. RTE. | SECTION | COUNTY | TOTAL SHEETS | SHEET NO. |
|---|---|---|---|---|
| 1509 | 06-00133-00-BR | DuPAGE | 426 | 155 |

CONTRACT NO. 61G79

ILLINOIS FED. AID PROJECT

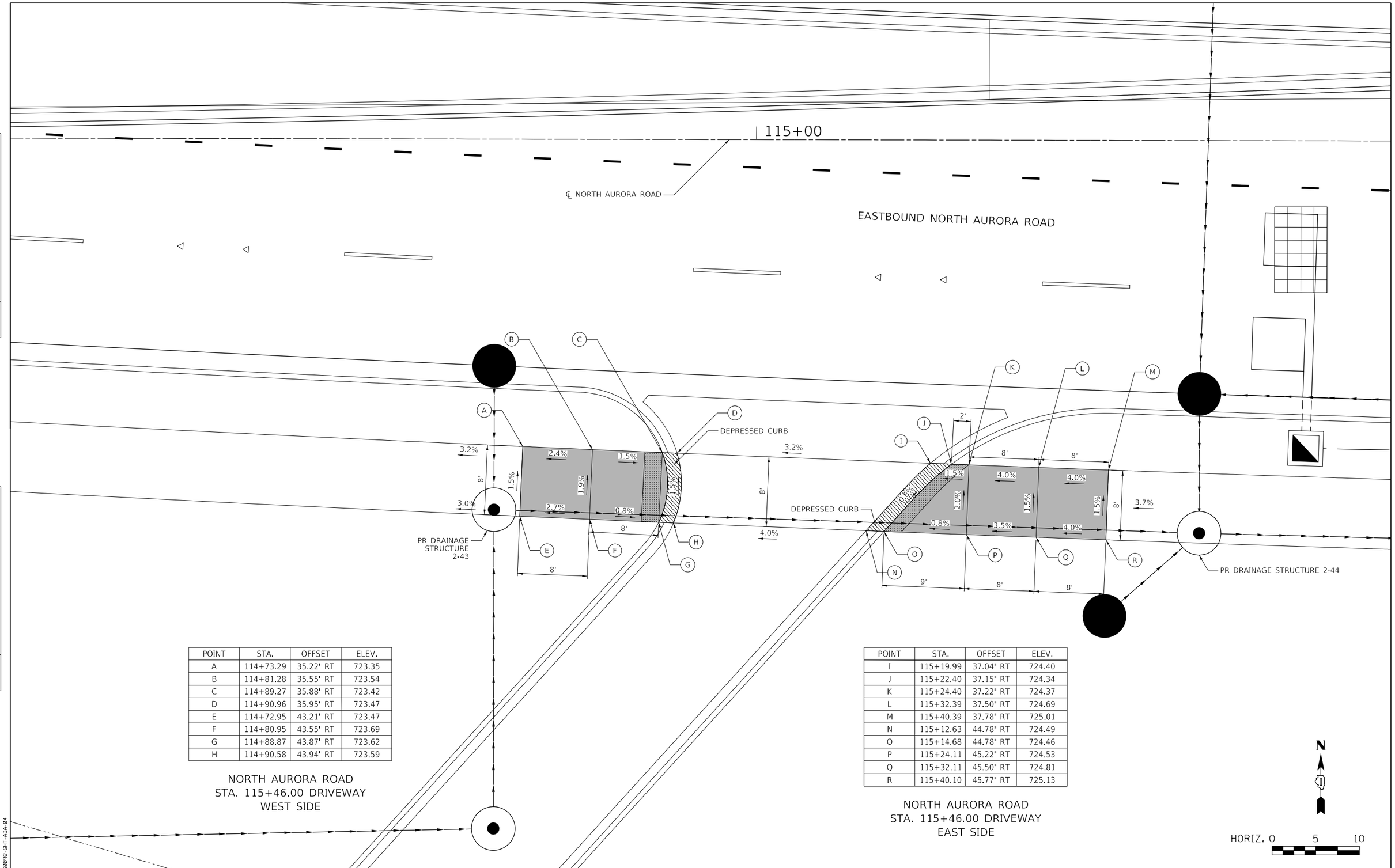


| POINT | STA. | OFFSET | ELEV. |
|---|---|---|---|
| A | 114+73.29 | 35.22' RT | 723.35 |
| B | 114+81.28 | 35.55' RT | 723.54 |
| C | 114+89.27 | 35.88' RT | 723.42 |
| D | 114+90.96 | 35.95' RT | 723.47 |
| E | 114+72.95 | 43.21' RT | 723.47 |
| F | 114+80.95 | 43.55' RT | 723.69 |
| G | 114+88.87 | 43.87' RT | 723.62 |
| H | 114+90.58 | 43.94' RT | 723.59 |

NORTH AURORA ROAD
STA. 115+46.00 DRIVEWAY
WEST SIDE

| POINT | STA. | OFFSET | ELEV. |
|---|---|---|---|
| I | 115+19.99 | 37.04' RT | 724.40 |
| J | 115+22.40 | 37.15' RT | 724.34 |
| K | 115+24.40 | 37.22' RT | 724.37 |
| L | 115+32.39 | 37.50' RT | 724.69 |
| M | 115+40.39 | 37.78' RT | 725.01 |
| N | 115+12.63 | 44.78' RT | 724.49 |
| O | 115+14.68 | 44.78' RT | 724.46 |
| P | 115+24.11 | 45.22' RT | 724.53 |
| Q | 115+32.11 | 45.50' RT | 724.81 |
| R | 115+40.10 | 45.77' RT | 725.13 |

NORTH AURORA ROAD
STA. 115+46.00 DRIVEWAY
EAST SIDE

PLAN
NOTE BOOK NO. ____
SURVEYED
PLOTTED
ALIGNMENT CHECKED
RT. OF WAY CHECKED
CADD FILE NAME
BY
DATE

PROFILE
NOTE BOOK NO. ____
SURVEYED
PLOTTED
GRADES CHECKED
B.M. NOTED
STRUCTURE NOTATNS CHKD
BY
DATE

FILE NAME = 060092-SHT-ADA-04

TRANSYSTEMS

| | | |
|---|---|---|
| USER NAME = brvanderwal | DESIGNED - MKW | REVISED - |
| | DRAWN - BMS | REVISED - |
| PLOT SCALE = 10.0000 ' / in. | CHECKED - BVW | REVISED - |
| PLOT DATE = 1/25/2025 | DATE - 1/25/2025 | REVISED - |

**STATE OF ILLINOIS**
**DEPARTMENT OF TRANSPORTATION**

**NORTH AURORA ROAD**
**PENNSBURY LANE TO FRONTENAC ROAD**
**ADA DETAILS – DRIVEWAY STA. 115+46.00**

SCALE: 1"=10' | SHEET 4 OF 5 SHEETS | STA. TO STA.

| F.A.U. RTE. | SECTION | COUNTY | TOTAL SHEETS | SHEET NO. |
|---|---|---|---|---|
| 1509 | 06-00133-00-BR | DuPAGE | 426 | 156 |

CONTRACT NO. 61G79

ILLINOIS FED. AID PROJECT

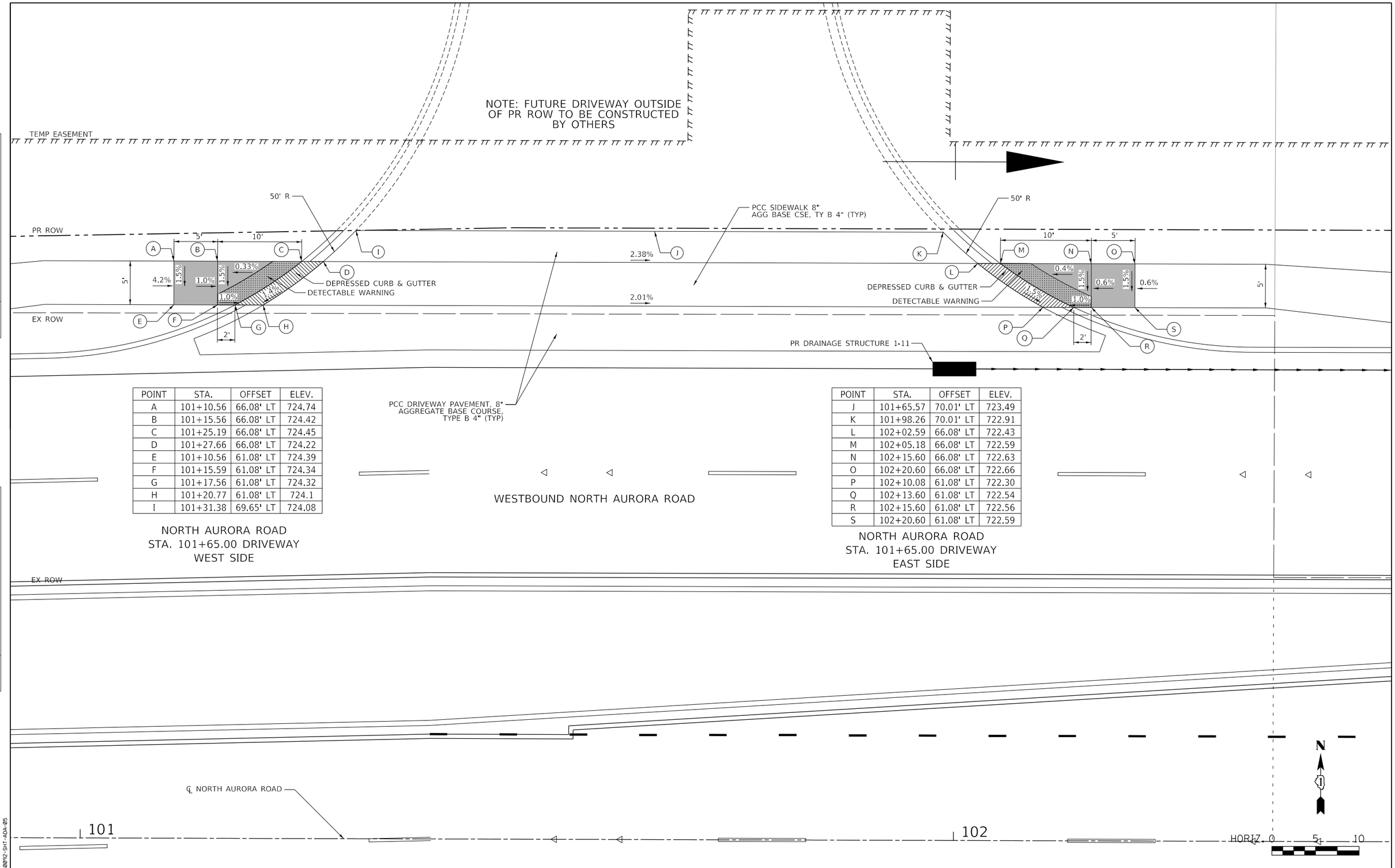


| POINT | STA. | OFFSET | ELEV. |
|---|---|---|---|
| A | 101+10.56 | 66.08' LT | 724.74 |
| B | 101+15.56 | 66.08' LT | 724.42 |
| C | 101+25.19 | 66.08' LT | 724.45 |
| D | 101+27.66 | 66.08' LT | 724.22 |
| E | 101+10.56 | 61.08' LT | 724.39 |
| F | 101+15.59 | 61.08' LT | 724.34 |
| G | 101+17.56 | 61.08' LT | 724.32 |
| H | 101+20.77 | 61.08' LT | 724.1 |
| I | 101+31.38 | 69.65' LT | 724.08 |

NORTH AURORA ROAD
STA. 101+65.00 DRIVEWAY
WEST SIDE

| POINT | STA. | OFFSET | ELEV. |
|---|---|---|---|
| J | 101+65.57 | 70.01' LT | 723.49 |
| K | 101+98.26 | 70.01' LT | 722.91 |
| L | 102+02.59 | 66.08' LT | 722.43 |
| M | 102+05.18 | 66.08' LT | 722.59 |
| N | 102+15.60 | 66.08' LT | 722.63 |
| O | 102+20.60 | 66.08' LT | 722.66 |
| P | 102+10.08 | 61.08' LT | 722.30 |
| Q | 102+13.60 | 61.08' LT | 722.54 |
| R | 102+15.60 | 61.08' LT | 722.56 |
| S | 102+20.60 | 61.08' LT | 722.59 |

NORTH AURORA ROAD
STA. 101+65.00 DRIVEWAY
EAST SIDE

PLAN
SURVEYED
PLOTTED
ALIGNMENT CHECKED
RT. OF WAY CHECKED
CADD FILE NAME
NOTE BOOK
NO.
BY
DATE

PROFILE
SURVEYED
PLOTTED
GRADES CHECKED
B.M. NOTED
STRUCTURE NOTAT'NS CHK'D
NOTE BOOK
NO.
BY
DATE

FILE NAME = 060092-SHT-ADA-05

TRANSYSTEMS

| | | |
|---|---|---|
| USER NAME = brvanderwal | DESIGNED - MKW | REVISED - |
| | DRAWN - BMS | REVISED - |
| PLOT SCALE = 10.0000 ' / in. | CHECKED - BVW | REVISED - |
| PLOT DATE = 1/25/2025 | DATE - 1/25/2025 | REVISED - |

**STATE OF ILLINOIS**
**DEPARTMENT OF TRANSPORTATION**

**NORTH AURORA ROAD**
**PENNSBURY LANE TO FRONTENAC ROAD**
**ADA DETAILS – DRIVEWAY STA. 101+65.00**

SCALE: 1"=10' | SHEET 5 OF 5 SHEETS | STA. TO STA.

| F.A.U. RTE. | SECTION | COUNTY | TOTAL SHEETS | SHEET NO. |
|---|---|---|---|---|
| 1509 | 06-00133-00-BR | DuPAGE | 426 | 157 |

CONTRACT NO. 61G79

ILLINOIS FED. AID PROJECT

Benchmark: CP#4. Set Mag nail, ℄ North Aurora Rd at fence line W. of Field Entrance. Elev. 725.39.

Existing Structure: S.N. 022-9950 was constructed in 1912 for the EJ&E Railway as Bridge No. 158. The existing structure is a single-span, two-bay through girder bridge supported on concrete gravity abutment walls with spread footing foundations. The bridge length is 38'-7" centerline-to-centerline of bearings and the girders are on 15'-0" centers. The existing structure is to be removed and replaced.

Traffic on North Aurora Road to be temporarily closed and maintained with stage construction.

No salvage.

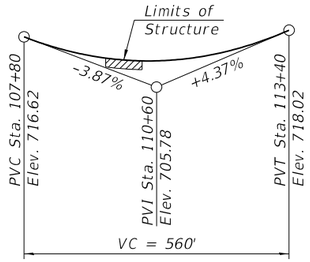


PROFILE GRADE

(Along Proposed ℄ N. Aurora Rd.)

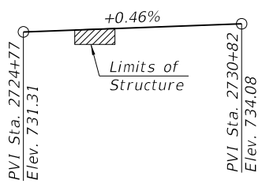


TOP OF RAIL ELEVATIONS

(Along ℄ Proposed WCL Main Track)

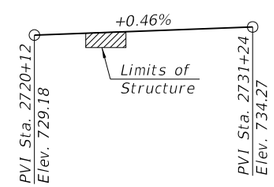


TOP OF RAIL ELEVATIONS

(Along ℄ Proposed WCL Siding Track)

LEGEND

Soil Boring

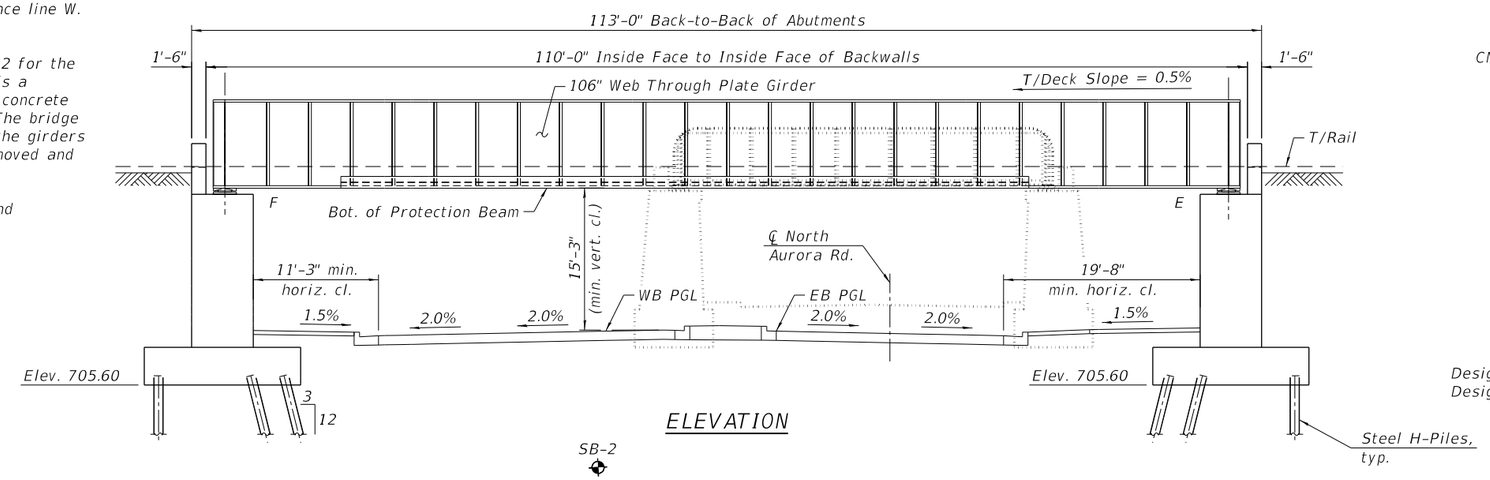


ELEVATION

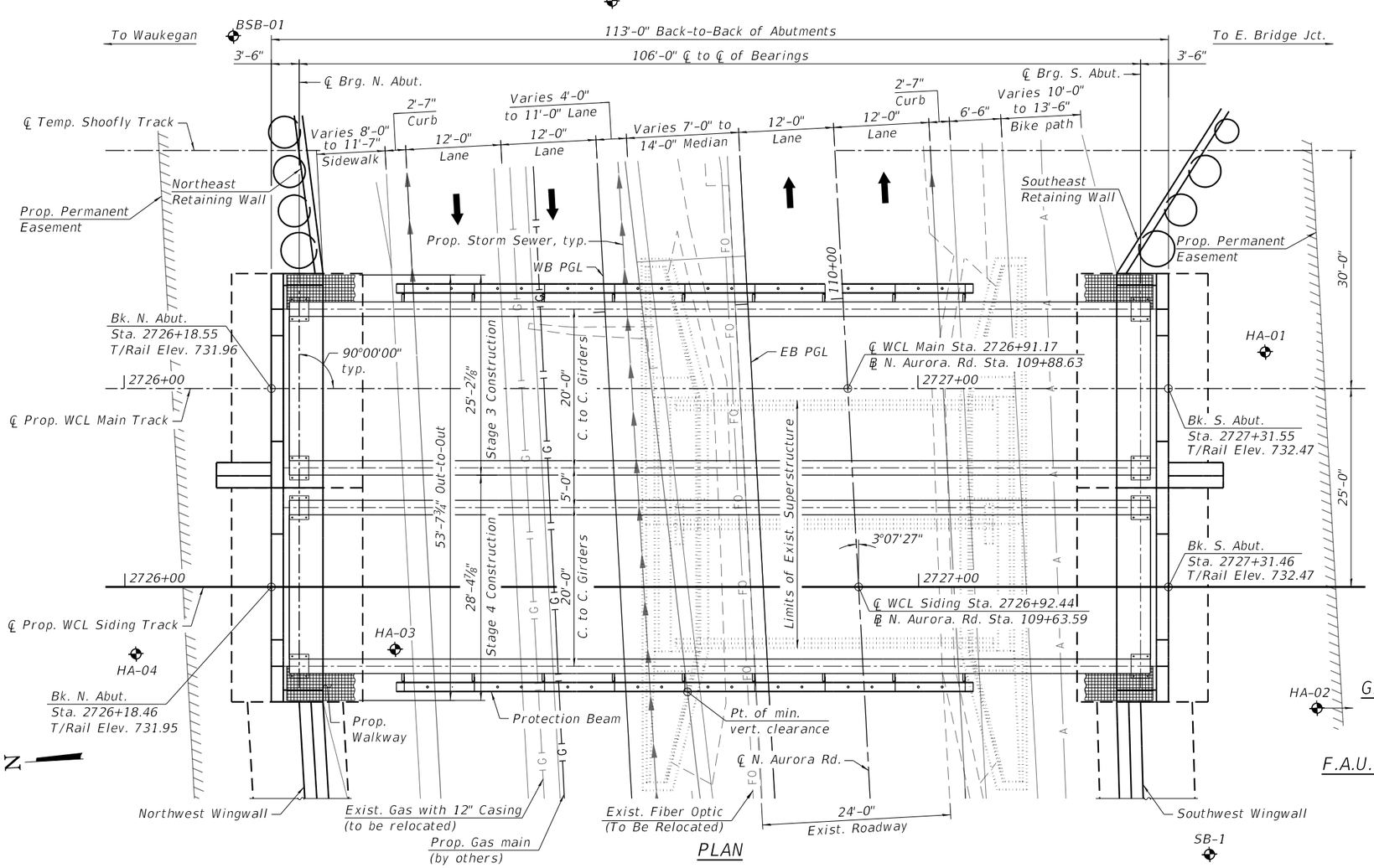


PLAN

## DESIGN SPECIFICATIONS

2019 AREMA Manual for Railway Engineering
CN Guidelines for Design of Railway Structures, January 2006

## LOADING COOPER E-90

Cooper E-90 or Alternate Load plus
Diesel Impact without hammer blow
Allow imposed dead load of 28" of ballast

## DESIGN STRESSES

FIELD UNITS

f'c = 5,000 psi
fy = 60,000 psi (Reinforcement)
fy = 50,000 psi (ASTM A709 Gr. 50W)

## SEISMIC DATA

Seismic Performance Zone (SPZ) = 1
Design Spectral Acceleration at 1.0 sec ($S_{D1}$) = 0.064g
Design Spectral Acceleration at 0.2 sec ($S_{DS}$) = 0.123g
Soil Site Class = C

LICENSED STRUCTURAL ENGINEER
JOSEPH R. MICKOW
081.007816
STATE OF ILLINOIS

JOSEPH R. MICKOW, P.E., S.E.
NO. 081-007816
EXP. DATE 11/30/2024

"I certify that to the best of my knowledge, information and belief, this bridge design is structurally adequate for the design loading shown on the plans. The design is an economical one for the style of structure and complies with the requirements of the 2019 AREMA Manual for Railway Engineering."

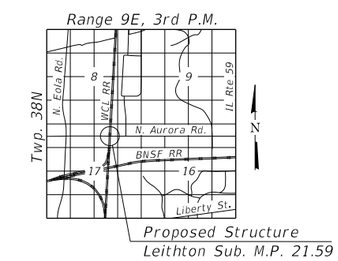


LOCATION SKETCH

# GENERAL PLAN AND ELEVATION
# WISCONSIN CENTRAL LTD
# OVER NORTH AURORA ROAD
# F.A.U. RT. 1509 - SEC. 06-00133-00-BR
# DUPAGE COUNTY
# STATION 109+88.63
# STRUCTURE NO. 022-9948

6:06:09 PM
FILE NAME: General Plan and Elevation

| | | | | | |
|---|---|---|---|---|---|
| TRANSYSTEMS | USER NAME = brvanderwal | DESIGNED - JRM | REVISED - | STATE OF ILLINOIS DEPARTMENT OF TRANSPORTATION | GENERAL PLAN AND ELEVATION STRUCTURE NO. 022-9948 |
| | | CHECKED - MDS | REVISED - | | |
| | PLOT SCALE = 16:0.0000 ':" / in. | DRAWN - JM | REVISED - | | |
| | PLOT DATE = 1/25/2025 | CHECKED - JRM | REVISED - | | SHEET 1 OF 45 SHEETS |

| F.A.U. RTE. | SECTION | COUNTY | TOTAL SHEETS | SHEET NO. |
|---|---|---|---|---|
| 1509 | 06-00133-00-BR | DUPAGE | 426 | 158 |
| | | CONTRACT NO. 61G79 | | |
| | | ILLINOIS | FED. AID PROJECT | |

## GENERAL NOTES

### SPECIFICATIONS

1. Design is in accordance with the American Railway Engineering and Maintenance-of-Way Association (AREMA) Manual for Railway Engineering, 2019 edition as modified by CN Railway Guidelines for Design of Railway Structures, January 2006 revision. Steel and bearing design is in accordance with AREMA Chapter 15, Steel Structures. Concrete and foundation design is in accordance with AREMA Chapter 8, Concrete Structures and Foundations.

2. Workmanship and Materials shall be in accordance with the Standard Specifications for Road and Bridge Construction, Illinois Department of Transportation, adopted Jan. 1, 2022, and the Supplemental Specifications and Recurring Special Provisions, adopted Jan. 1, 2024. Steel fabrication shall be in accordance with the AREMA Specifications as modified by CN Railway's Specification HC05121 Structural Steel Fabrication for Railway Bridges (Modified).

3. All railroad related work of the contract shall be completed to the satisfaction of the Railroad Engineer. The decision of the Railroad Engineer shall be final on all questions which may arise regarding, including but not limited to, the quality and acceptability of materials and work; the manner of performance; acceptable rates of progress on the work; the interpretation of the contract plans and specifications; and the fulfillment of the contract.

### STRUCTURAL STEEL

1. All structural steel shall be ASTM A709, Grade 50W, unless otherwise noted.

2. Fabrication of structural steel shall be performed by a fabricator certified under the AISC Certification Program, Category ABR, Advanced Bridges, with Fracture Critical Endorsement.

3. The webs and tension flanges of the through plate girders and end floor beams of the bridge are designated as "Fracture Critical Members" and shall conform to the fracture control plan for fracture critical members in the AREMA Specifications, Chapter 15 for Zone 3. These members are designated "F.C.M." on the plans.

4. The main load carrying components subjected to tensile stress, other than fracture critical members, shall conform to the supplemental requirements for Notch Toughness, Zone 3. These components are designated "N.T.R." on the plans.

5. Material noted on the plans to be corrosion-resistant (C.R.) steel shall conform to ASTM A709 Grade 50W.

6. The upper floor plate must have raised pattern conforming to the requirements of ASTM A786 and be corrosion resistant steel according to ASTM A709 Grade 50W.

7. Calculated weight of Structural Steel = 884,655 lbs. (ASTM A709 Grade 50W)

8. Furnishing and Erecting Structural Steel, Special shall include all steel components of the proposed through plate girder spans including bearings, anchor bolts, walkway bracketss, protection beams, all bolts and connections. See Special Provisions.

9. All bolted connections shall be made with high-strength bolts conforming to ASTM F3125 Grade A325, Type 3. Bolts shall be 7/8" diameter in 15/16" diameter holes, unless otherwise noted. Holes for shop fasteners shall be subpunched or subdrilled and reamed through a template in accordance with the Special Provisions. Bolts shall be tightened by the "turn-of-the-nut" method as described in the AREMA Specifications.

10. All bolted surfaces are designed for F3125 Grade A325 Class B (Slip Coefficient = 0.5) requiring all surfaces to be blast cleaned to a min. standard of SPSC 6.

### WELDING

1. All welding shall be in accordance with the requirements of the current Bridge Welding Code, AWS D1.5 and the applicable provisions of Chapter 15 of the AREMA Specifications.

2. All welding must be done with shielded metal-arc (SMAW) or submerged arc processes (SAW). All flange-to-web "T-Joint" welds and shop welded splices in flanges or webs shall be by approved continuous automatic feed and travel submerged arc welds. Electro-slag, electro-gas and gas metal-arc processes will not be permitted.

3. Preheating is required prior to flame cutting or welding:

| Material Thickness | Temperature |
|---|---|
| >1 1/2" to 2 3/8" | 150 °F |
| >2 3/8" | 225 °F |

4. Welding procedures shall be submitted for the Engineer's review and approval prior to commencing any fabrication work. Welding procedures shall be prepared in accordance with the applicable requirements of Section 5 of the Bridge Welding Code AWS D1.5 and the AREMA Specifications.

5. No field welding is permitted except as specified in the contract documents.

## TOTAL BILL OF MATERIAL

| Item | Unit | Super | Sub | Total |
|---|---|---|---|---|
| Porous Granular Embankment | Cu. Yd. | | 386 | 386 |
| Removal Of Existing Structures | Each | | | 1 |
| Structure Excavation | Cu. Yd. | | 2,848 | 2,848 |
| Form Liner Textured Surface | Sq. Ft. | | 2,493 | 2,493 |
| Reinforcement Bars, Epoxy Coated | Pound | | 71,110 | 71,110 |
| Bar Splicers | Each | | 178 | 178 |
| Pipe Handrail | Foot | | 10 | 10 |
| Furnishing Steel Piles HP14x89 | Foot | | 9,090 | 9,090 |
| Driving Piles | Foot | | 9,090 | 9,090 |
| Test Pile Steel HP14x89 | Each | | 2 | 2 |
| Pile Shoes | Each | | 106 | 106 |
| Name Plates | Each | | 1 | 1 |
| Drainage System for Structures | L Sum | | 1 | 1 |
| Geocomposite Wall Drain | Sq. Yd. | | 304 | 304 |
| Pipe Underdrains For Structures 4" | Foot | | 84 | 84 |
| Concrete Gutter, Type B | Foot | | 44 | 44 |
| Conduit Attached to Structure, 4" Dia., Galvanized Steel | Foot | 226 | | 226 |
| Concrete Structures (Special) | Cu. Yd. | | 900.5 | 900.5 |
| Furnishing And Erecting Structural Steel, Special | L. Sum. | 1 | | 1 |
| Temporary Soil Retention System (Special) | Sq. Ft. | | 7,011 | 7,011 |
| Membrane Waterproofing (Special) | Sq. Ft. | 4,064 | | 4,064 |
| Chain Link Fence, 4' Attached To Structure | Foot | | 44 | 44 |
| Furnish and Install Walkway | Foot | 227 | | 227 |
| Anti-Graffiti Protection System | Sq. Ft. | | 3,215 | 3,215 |
| Structural Repair of Concrete (Depth Greater Than 5 Inches) | Sq. Ft. | | 25 | 25 |

## GENERAL NOTES (cont.)

1. Plan dimensions and details relative to the existing structure have been taken from existing plans are subject to nominal construction variations. The Contractor shall field verify existing dimensions and details affecting new construction and make necessary approved adjustments prior to construction or ordering of materials. Such variations shall not be cause for additional compensation for a change in scope of the work, however, the Contractor will be paid for the quantity actually furnished at the unit price bid for the work.

### CAST-IN-PLACE CONCRETE

1. Concrete shall have a minimum compressive strength of 5,000 psi in 28 days.

2. Reinforcement bars designated (E) shall be epoxy coated in accordance with ASTM A775.

3. All exposed corners shall be chamfered 3/4", unless otherwise noted.

4. Anti-Graffiti Protection System shall be applied to the exposed areas of the abutments and wingwalls.

## INDEX OF SHEETS


1 General Plan and Elevation
2 General Data
3 Foundation Layout Plan
4 Stage Construction Details
5 Construction Staging Plan - Stage 3
6 Construction Staging Plan - Stage 4
7 Temporary Soil Retention System General Notes
8 Temporary Soil Retention System Plan - Stage 3
9 Temporary Soil Retention System Plan - Stage 4
10 Temporary Soil Retention System Elev. - N. Abut. Stage 3
11 Temporary Soil Retention System Elev. - S. Abut. Stage 3
12 Temporary Soil Retention System Elev. - N. Abut. Stage 4
13 Temporary Soil Retention System Elev. - S. Abut. Stage 4
14 Temporary Soil Retention System Details
15 Existing Structure Removal Details 1
16 Existing Structure Removal Details 2
17 North Abutment Plan and Elevation
18 North Abutment Footing Plan
19 North Abutment Details 1
20 North Abutment Details 2
21 South Abutment Plan and Elevation
22 South Abutment Footing Plan
23 South Abutment Details 1
24 South Abutment Details 2
25 Deck Cross Section
26 Framing Plan
27 Girder Details 1
28 Girder Details 2
29 Design Data
30 End Floorbeam Details
31 Lateral Bracing Details
32 Floor Plate Plan
33 Ballast Stop Plate Details
34 Upper Floor Plate Details
35 Fixed Bearing Details
36 Expansion Bearing Details
37 Walkway Details
38 Protection Beam Details
39 Drainage Details
40 Bar Splicer Assembly and Mechanical Splicer Details
41 Boring Logs 1
42 Boring Logs 2
43 Boring Logs 3
44 Boring Logs 4
45 Boring Logs 5


WISCONSIN CENTRAL R.R.
BUILT BY
CITY OF NAPERVILLE
F.A.U. RTE. 1509
SEC. 06-00133-00-BR
STA. 109+88.63 LOADING E90
STRUCTURE NO. 022-9948

### NAME PLATE

See Std. 515001

6:06:13 PM
FILE NAME: General Data

TRANSYSTEMS

| | | | |
|---|---|---|---|
| USER NAME = brvanderwal | DESIGNED - JRM | REVISED - | |
| | CHECKED - MDS | REVISED - | |
| PLOT SCALE = 5:4.000000 ':" / in. | DRAWN - MDG | REVISED - | |
| PLOT DATE = 1/25/2025 | CHECKED - JRM | REVISED - | |

STATE OF ILLINOIS
DEPARTMENT OF TRANSPORTATION

GENERAL DATA
STRUCTURE NO. 022-9948

SHEET 2 OF 45 SHEETS

| F.A.U. RTE. | SECTION | COUNTY | TOTAL SHEETS | SHEET NO. |
|---|---|---|---|---|
| 1509 | 06-00133-00-BR | DUPAGE | 426 | 159 |
| | | CONTRACT NO. 61G79 | | |
| | ILLINOIS | FED. AID PROJECT | | |

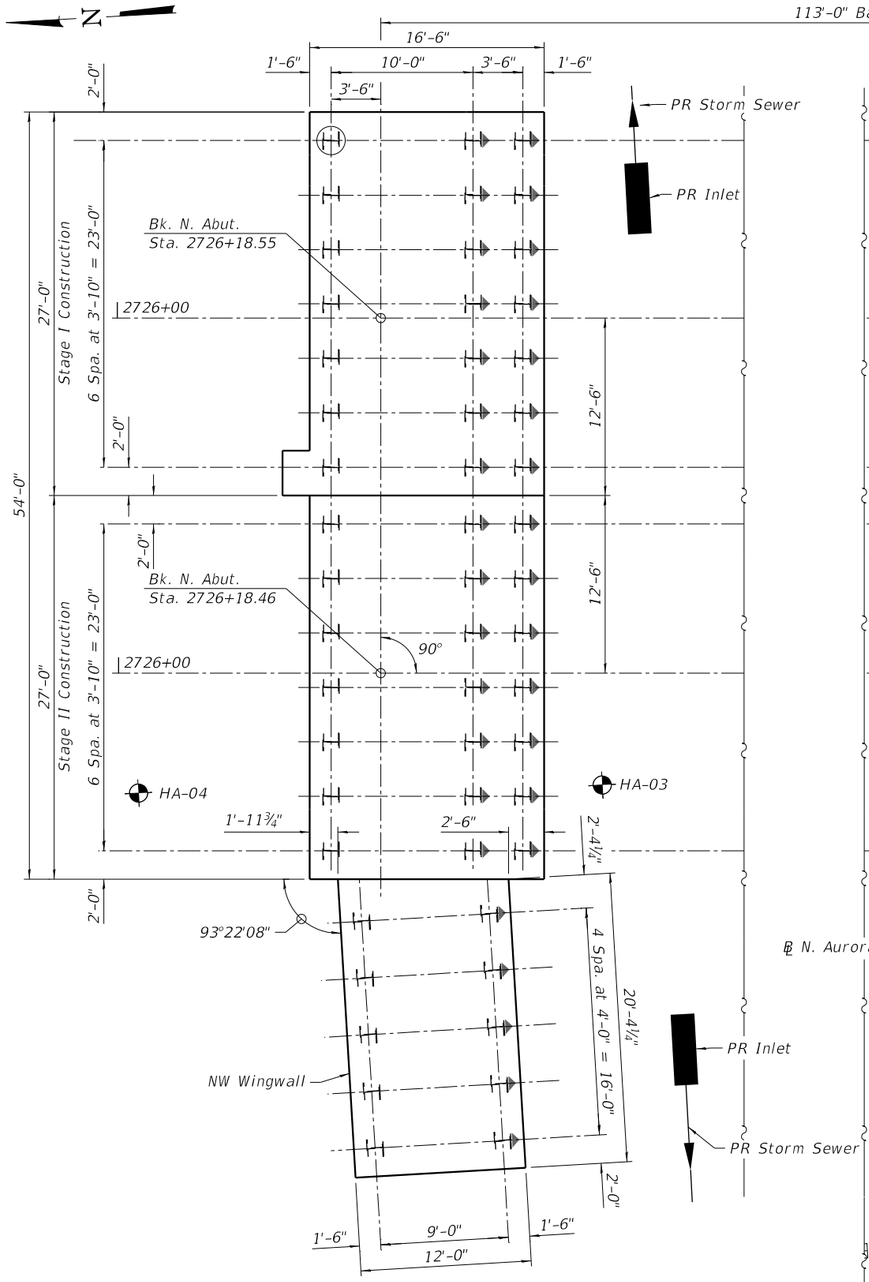


NORTH ABUTMENT PILE LAYOUT

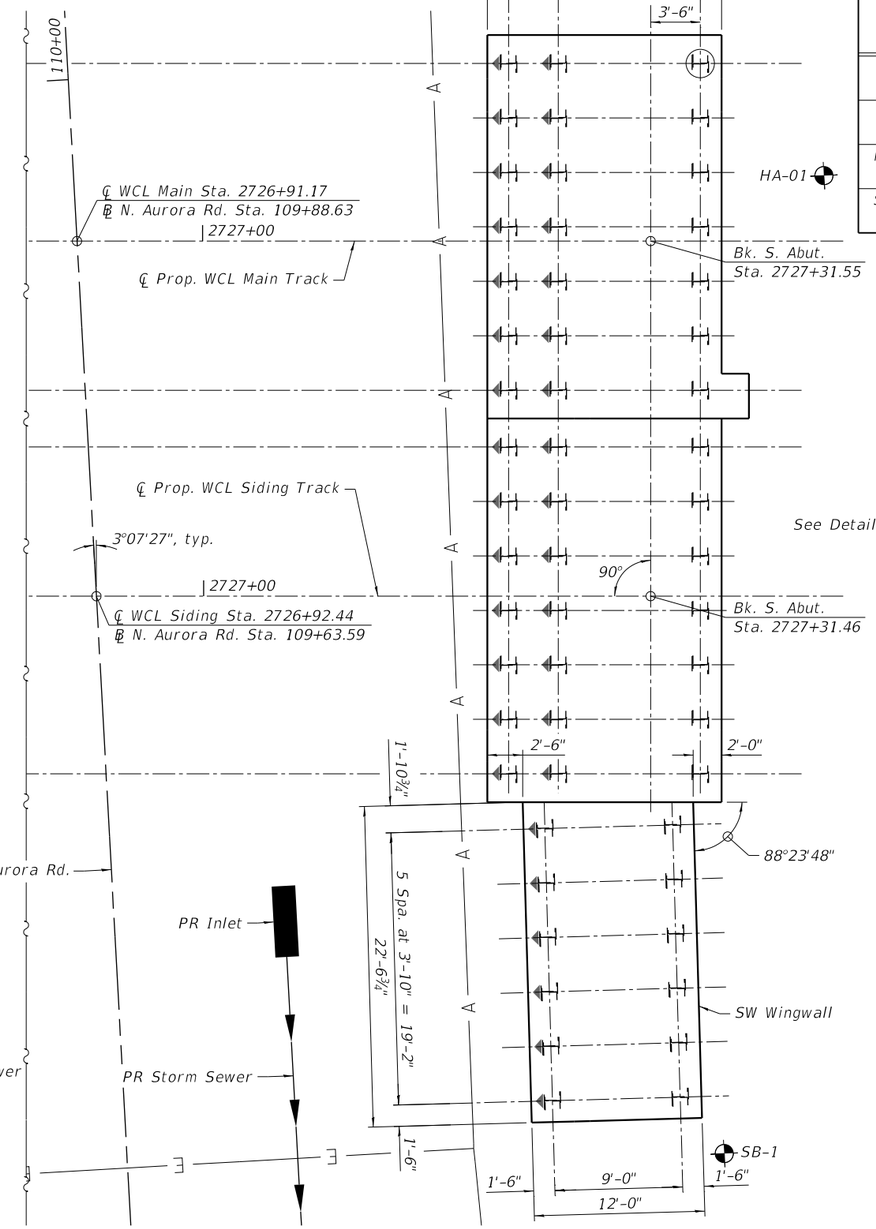


SOUTH ABUTMENT PILE LAYOUT

| HP14x89 Piles *(Excludes Test Piles) | | | | | | |
|---|---|---|---|---|---|---|
| Location | Type | No. | Estimated Length (Feet) | | Allowable Resistance Available (Tons) | Cut-Off Elevation |
| | | | Each Lin. Ft. | Total Lin. Ft. | | |
| North Abutment | *Vertical | 13 | 87 | 1,131 | 164 | 706.60 |
| | Battered | 28 | 90 | 2,520 | 164 | 706.60 |
| South Abutment | *Vertical | 13 | 84 | 1,092 | 164 | 706.60 |
| | Battered | 28 | 87 | 2,436 | 164 | 706.60 |
| Northwest Wingwall | Vertical | 5 | 87 | 435 | 164 | 706.60 |
| | Battered | 5 | 90 | 450 | 164 | 706.60 |
| Southwest Wingwall | Vertical | 6 | 84 | 504 | 164 | 706.60 |
| | Battered | 6 | 87 | 522 | 164 | 706.60 |

PILE DATA:

All Piles shall be HP14x89 with pile shoes.

Estimated Pile Tip Elev. = 620.00 (N. Abut.); 623.00 (S. Abut.)

Nominal Required Bearing = 329 tons.

*Test pile length furnished shall be at least 10' greater than estimated production pile lengths shown.

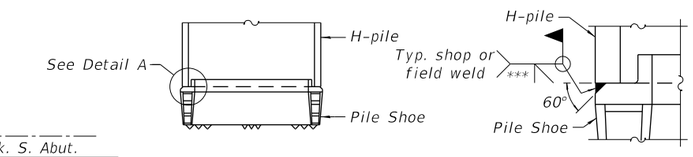


PILE SHOE ELEVATION

DETAIL A

*** Weld size per pile shoe manufacturer (5/16" min.)

PILE SHOE DETAILS

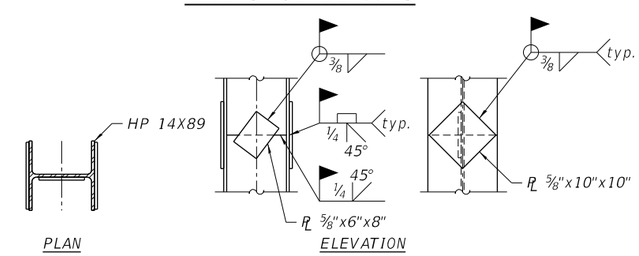


PILE SPLICE DETAILS

LEGEND

- Denotes Vertical Pile
- Denotes 3:12 Battered Pile
- Denotes Test Pile with Pile Shoe
- A — Existing Electric - Aerial
- E — Existing Electric - Underground
- Soil Boring

Notes:

1. The Steel H-Piles shall be according to ASTM A572 Grade 50.
2. All piles shall be driven to 329 ton capacity or practical refusal. If any pile cannot be driven to this capacity, the Engineer shall be notified.

6:06:17 PM
FILE NAME: Foundation Layout Plan

TRANSYSTEMS

| | | | |
|---|---|---|---|
| USER NAME = brvanderwal | DESIGNED - TJA | REVISED - | |
| | CHECKED - JRM | REVISED - | |
| PLOT SCALE = 10:8.0000 ':' / in. | DRAWN - MDG | REVISED - | |
| PLOT DATE = 1/25/2025 | CHECKED - JRM | REVISED - | |

STATE OF ILLINOIS
DEPARTMENT OF TRANSPORTATION

FOUNDATION LAYOUT PLAN
STRUCTURE NO. 022-9948

SHEET 3 OF 45 SHEETS

| F.A.U. RTE. | SECTION | COUNTY | TOTAL SHEETS | SHEET NO. |
|---|---|---|---|---|
| 1509 | 06-00133-00-BR | DUPAGE | 426 | 160 |

CONTRACT NO. 61G79

ILLINOIS FED. AID PROJECT

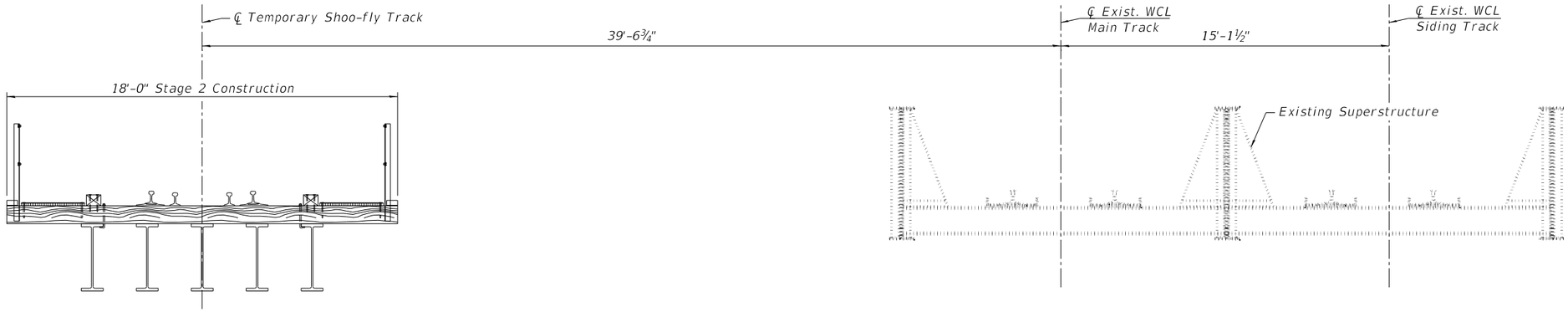


STAGE 2 CONSTRUCTION
(Looking South)

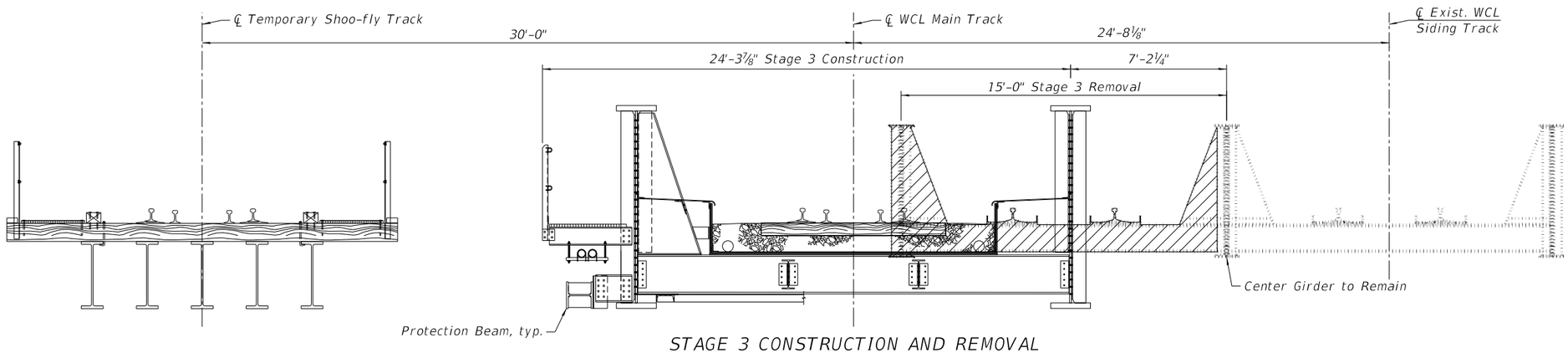


STAGE 3 CONSTRUCTION AND REMOVAL
(Looking South)

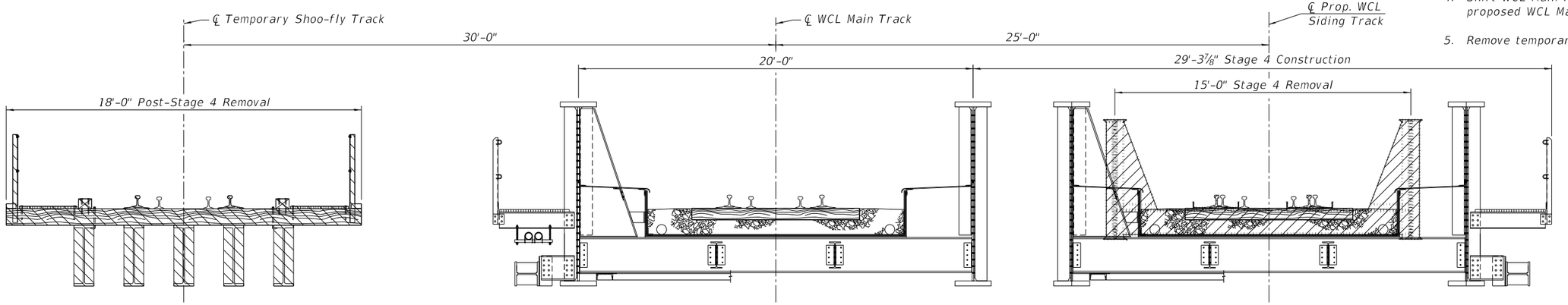


STAGE 4 CONSTRUCTION AND REMOVAL
(Looking South)

## STAGE 2 CONSTRUCTION

1. Construct temporary shoo-fly bridge.
2. Shift WCL Main railroad traffic to temporary shoofly tracks once completed.

## STAGE 3 CONSTRUCTION

1. Remove eastern bay of the existing bridge (exist. WCL Main track). The center girder and stiffeners are to remain.
2. Construct proposed WCL Main Track bridge.
3. Shift exist. WCL Siding railroad traffic to proposed WCL main track once completed.

## STAGE 4 CONSTRUCTION

1. Remove western bay of the existing bridge (exist. WCL Siding track).
2. Construct proposed WCL Siding Track bridge.
3. Shift WCL Siding railroad traffic to proposed WCL Siding track once completed.
4. Shift WCL Main railroad traffic to proposed WCL Main track once completed.
5. Remove temporary shoo-fly bridge.

6:06:22 PM
FILE NAME: Stage Construction Details

TRANSYSTEMS

| | | | |
|---|---|---|---|
| USER NAME = brvanderwal | DESIGNED - JRM | REVISED - | |
| | CHECKED - MDS | REVISED - | |
| PLOT SCALE = 5:10.0000 ':" / in. | DRAWN - MDG | REVISED - | |
| PLOT DATE = 1/25/2025 | CHECKED - JRM | REVISED - | |

STATE OF ILLINOIS
DEPARTMENT OF TRANSPORTATION

STAGE CONSTRUCTION DETAILS
STRUCTURE NO. 022-9948

SHEET 4 OF 45 SHEETS

| F.A.U. RTE. | SECTION | COUNTY | TOTAL SHEETS | SHEET NO. |
|---|---|---|---|---|
| 1509 | 06-00133-00-BR | DUPAGE | 426 | 161 |
| | | CONTRACT NO. 61G79 | | |
| | | ILLINOIS | FED. AID PROJECT | |

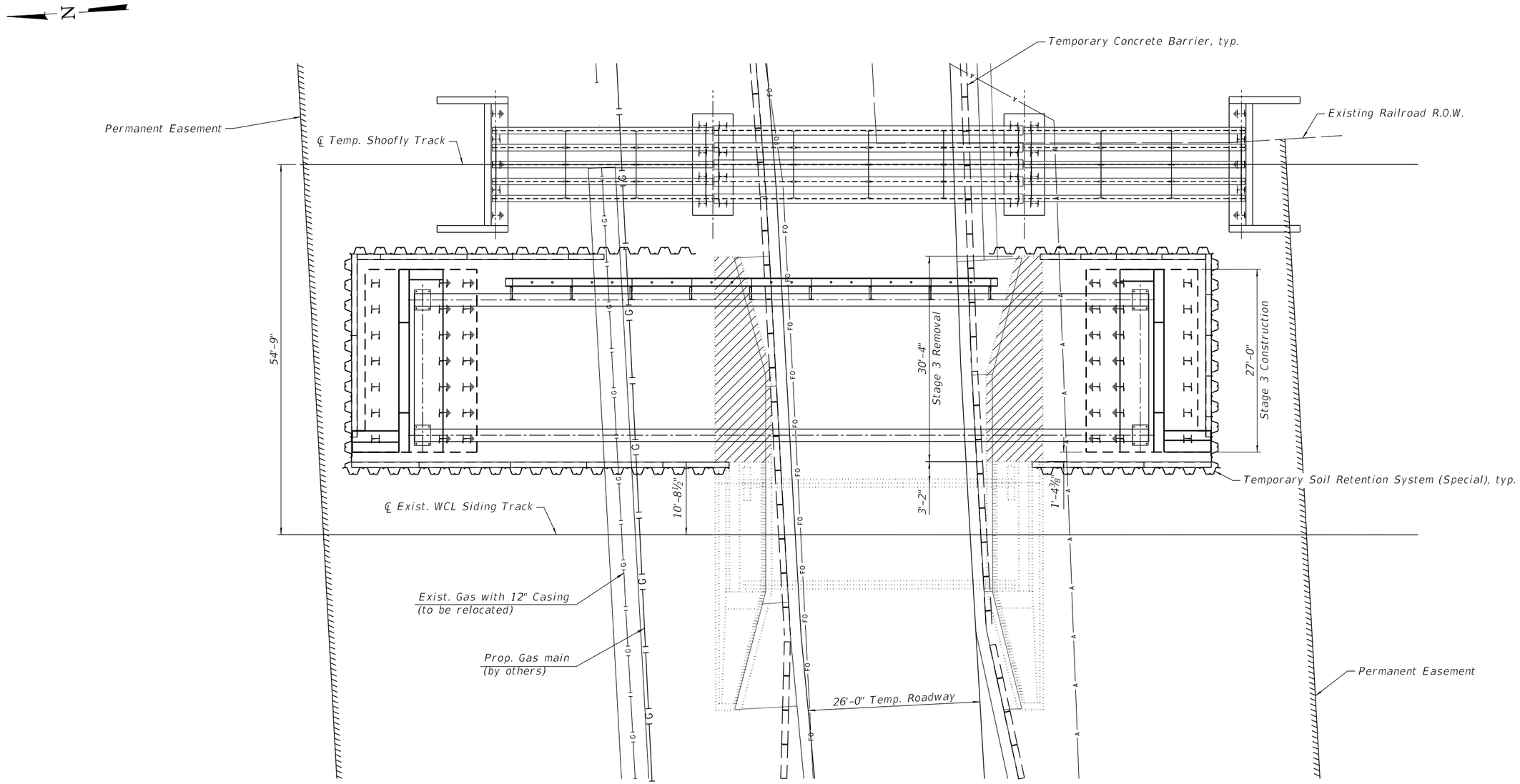


PLAN - STAGE 3

## PROPOSED CONSTRUCTION SEQUENCE

1. Remove the existing main track bridge superstructure (center girder remains).
2. Construct the temporary retention systems.
3. Remove the Stage 3 portion of the existing substructure.
4. Excavate for each abutment.
5. Construct the main track bridge abutments and superstructure.
6. Install temporary closure plates according to Details on sheet 9 of 45.
7. Remove the temporary retention systems with sections to remain as shown on sheets 8 through 13.
8. Shift exist. WCL Siding railroad traffic to prop. WCL Main track.

Notes:
For Temporary Soil Retention System (Special) Details, see Sheets 7 through 14 of 45.

6:06:27 PM
FILE NAME: Construction Staging Plan - Stage 3

TRANSYSTEMS

| | | | |
|---|---|---|---|
| USER NAME = brvanderwal | DESIGNED - WJC | REVISED - | |
| | CHECKED - JRM | REVISED - | |
| PLOT SCALE = 16:0.0000 ':" / in. | DRAWN - WJC | REVISED - | |
| PLOT DATE = 1/25/2025 | CHECKED - JRM | REVISED - | |

STATE OF ILLINOIS
DEPARTMENT OF TRANSPORTATION

CONSTRUCTION STAGING PLAN - STAGE 3
STRUCTURE NO. 022-9948

SHEET 5 OF 45 SHEETS

| F.A.U. RTE. | SECTION | COUNTY | TOTAL SHEETS | SHEET NO. |
|---|---|---|---|---|
| 1509 | 06-00133-00-BR | DUPAGE | 426 | 162 |
| | | CONTRACT NO. 61G79 | | |
| | | ILLINOIS | FED. AID PROJECT | |

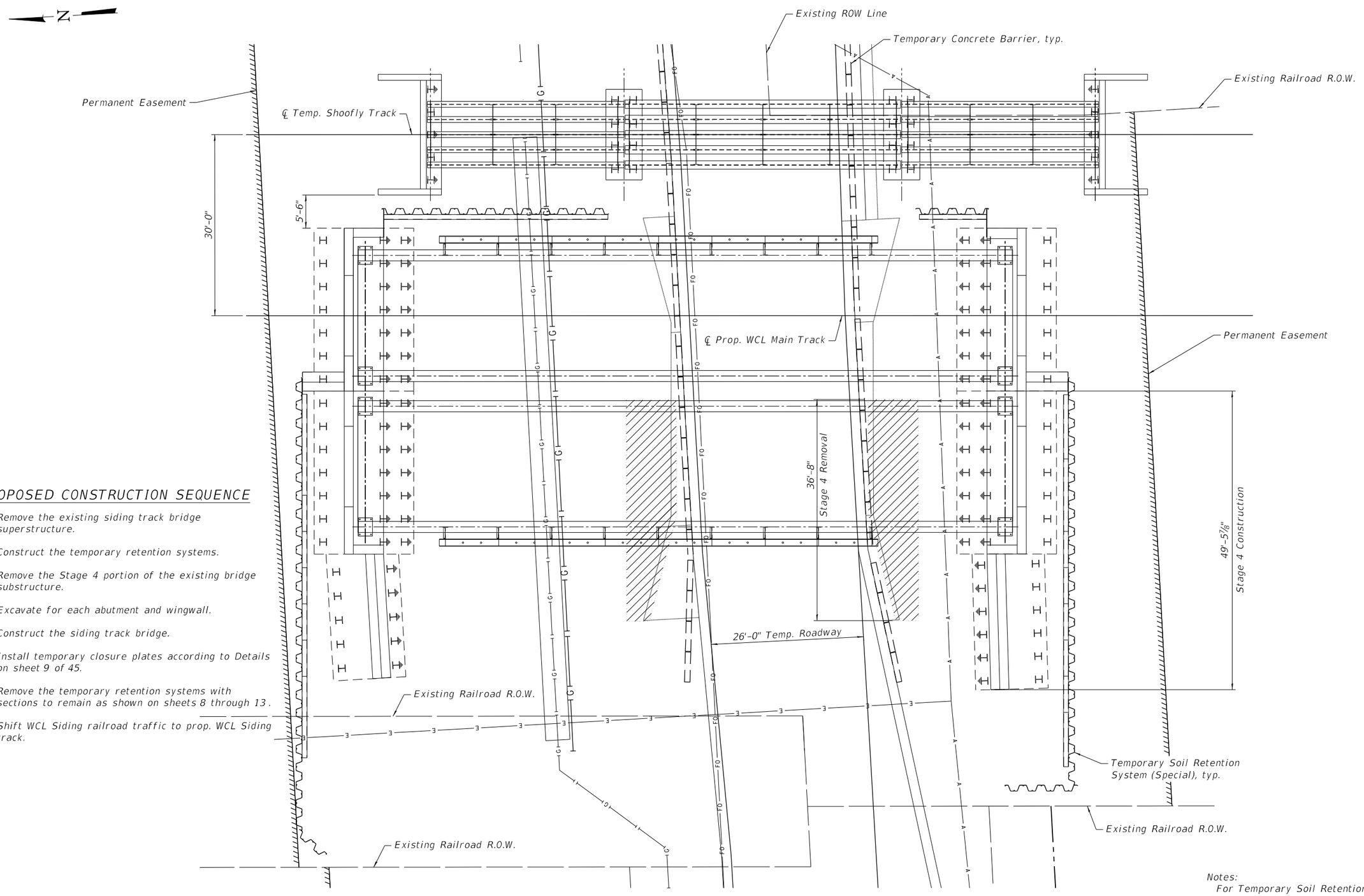


## PROPOSED CONSTRUCTION SEQUENCE

1. Remove the existing siding track bridge superstructure.
2. Construct the temporary retention systems.
3. Remove the Stage 4 portion of the existing bridge substructure.
4. Excavate for each abutment and wingwall.
5. Construct the siding track bridge.
6. Install temporary closure plates according to Details on sheet 9 of 45.
7. Remove the temporary retention systems with sections to remain as shown on sheets 8 through 13.
8. Shift WCL Siding railroad traffic to prop. WCL Siding track.

## PLAN - STAGE 4

Notes:
For Temporary Soil Retention System (Special) Details, see Sheets 7 through 14 of 45.

6:06:32 PM
FILE NAME: Construction Staging Plan - Stage 4

TRANSYSTEMS

| | | | |
|---|---|---|---|
| USER NAME = brvanderwal | DESIGNED - WJC | REVISED - | |
| | CHECKED - JRM | REVISED - | |
| PLOT SCALE = 16:0.0000 ':" / in. | DRAWN - WJC | REVISED - | |
| PLOT DATE = 1/25/2025 | CHECKED - JRM | REVISED - | |

STATE OF ILLINOIS
DEPARTMENT OF TRANSPORTATION

CONSTRUCTION STAGING PLAN - STAGE 4
STRUCTURE NO. 022-9948

SHEET 6 OF 45 SHEETS

| F.A.U. RTE. | SECTION | COUNTY | TOTAL SHEETS | SHEET NO. |
|---|---|---|---|---|
| 1509 | 06-00133-00-BR | DUPAGE | 426 | 163 |
| | | CONTRACT NO. 61G79 | | |
| | | ILLINOIS | FED. AID PROJECT | |

## GENERAL NOTES - TEMPORARY SOIL RETENTION SYSTEM

PRE-CONSTRUCTION REQUIREMENTS:

1. The Contractor shall be responsible for confirming or establishing the existence of all utility facilities relevant to their exact locations, and schedule all necessary utility relocations.
2. Contractor must coordinate all sheet pile and pile driving activities with Nicor for the construction of the temporary soil retention system.
3. All elevations and dimensions must be verified in the field.

REGROUTABLE GROUND ANCHORS:

1. Drill approximately a minimum 8-inch diameter hole to the lengths shown on the Anchor Schedule. Anchor locations and elevations are shown on plan and elevations. Tremie grout the anchor hole. Insert tendon after the anchor hole is filled with grout.
2. Regrout the bond length as necessary to develop the required anchor capacity.
3. Allow grout to harden a minimum of five (5) days. Then tension each anchor in accordance with the anchor testing procedures.
4. All anchors within the Railroad R.O.W. shall be fully removed.

MATERIALS:

Steel: ASTM A 572, Grade 50 for steel sheet piles
ASTM A 572, Grade 50 for steel walers and bearing plates

Anchor: 1¼" diameter, 150 ksi Grade, conforming to AASHTO M275 (ASTM A722), with Class I corrosion protection (double).

Grout: Neat cement grout having a 28-day compressive strength of 3,000 psi, consisting of portland cement Type I, II or III, and conforming to Section 1001 of the Standard Specifications. Testing of grout is not required since grout will be tested with anchor stressing as part of system performance.

Welds: E70XX weld strength level, low hydrogen electrode. Testing of welds is not required since welds will be tested with anchor stressing as part of system performance.

Misc: Bolts, nuts and washers shall conform to the requirements of ASTM F3125 Grade A325, A563 and F436, respectively. Pipe spacers shall conform to the requirements of ASTM A53.

Loads: Anchor Types 1, 3, and 4 were design to withstand E80 loading, while Anchor Types 2, 5, and 6 were designed for a construction load of 300 psf.

Equivalent members may be substituted for those shown. If alternate members are used, the Contractor must submit a re-design of the wall for approval.

For more information, see the Special Provisions for Temporary Soil Retention System (Special), Ground Anchors, and Helical Ground Anchors.

Lateral live load deflection shall be limited to ⅜" for shoring located within 18'-0" of centerline of track and ½" for shoring located outside 18'-0". The maximum allowable vertical or horizontal displacement of rail shall be ¼".

See sheet 14 of 45 for Ground Anchor Schedule.

## ANCHOR TESTING PROCEDURES

PERFORMANCE TEST

Five percent of the ground anchors or a minimum of three ground anchors, whichever is greater, shall be performance-tested according to the following procedures. The Engineer shall select the ground anchors to be performance tested. The remaining anchors shall be tested according to the proof test procedures.

The performance test shall be made by incrementally loading and unloading the ground anchors in accordance with the following schedule:

PERFORMANCE TEST SCHEDULE

| LOAD | LOAD | LOAD |
|---|---|---|
| AL | AL | 1.00DL |
| 0.25DL* | 0.25DL | 1.20DL* |
| AL | 0.50DL | AL |
| 0.25DL | 0.75DL | 0.25DL |
| 0.50DL* | 1.00DL* | 0.50DL |
| AL | AL | 0.75DL |
| 0.25DL | 0.25DL | 1.00DL |
| 0.50DL | 0.50DL | 1.20DL |
| 0.75DL* | 0.75DL | 1.33DL* (Max test load) |
| | | Reduce to lock-off load (1.00DL) |

Where: AL = Alignment Load
DL = Design Load

*Graph Required

The load shall be raised from one increment to another immediately after recording the ground anchor movement.

The ground anchor movement, on either side of the jack, shall be measured and recorded to the nearest 0.001 inch with respect to the independant fixed reference points at the alignment load and at each load increment.

The load shall be monitored with a presure gauge.

The reference pressure gauge shall be placed in series with the pressure gauge during each performance test.

The maximum test load in a performance test shall be held for 10 minutes. The jack shall be repumped as necessary in order to maintain a constant load. The load-hold period shall start as soon as the maximum test load is applied and the ground anchor movement shall be measured and recorded at 1 minute, 2, 3, 4, 5, 6, and 10 minutes. If the ground anchor movements between 1 minute and 10 minutes exceeds 0.04 inch, the maximum test load shall be held for an additional 50 minutes. If the load-hold is extended, the ground anchor movement shall be recorded at 15 minutes, 20, 25, 30, 45 and 60 minutes.

A graph shall be constructed showing a plot of ground anchor movement versus load for each load increment marked with the asterisk (*) in the performance test schedule and a plot of the residual ground anchor movement of the tendon at each alignment load versus the highest previously applied load. Graph shall be approved by the Engineer prior to use.

PROOF TEST

The proof test shall be performed by incrementally loading the ground anchors in accordance with the following schedule:

PROOF TEST SCHEDULE

| LOAD | LOAD |
|---|---|
| AL | 1.00DL |
| 0.25DL | 1.20DL |
| 0.50DL | 1.33DL (Max test load) |
| 0.75DL | Reduce to lock-off load (1.0DL) |

Where: AL = Alignment Load
DL = Design Load

The load shall be raised from one increment to another immediately after recording the ground anchor movement.

The ground anchor movement, on either side of the jack, shall be measured and recorded to the nearest 0.001 inch with respect to the independant fixed reference points at the alignment load and at each load increment.

The load shall be monitored with a presure gauge.

At load increments other than the maximum test load, the load shall be held just long enough to obtain the movement reading.

The maximum test load in a proof test shall be held for 10 minutes. The load-hold period shall start as soon as the maximum test load is applied and the ground anchor movement shall be measured and recorded at 1 minute, 2, 3, 4, 5, 6, and 10 minutes. If the ground anchor movements between 1 minute and 10 minutes exceeds 0.04 inch, the maximum test load shall be held for an additional 50 minutes. If the load-hold is extended, the ground anchor movement shall be recorded at 15 minutes, 20, 25, 30, 45 and 60 minutes.

A graph shall be constructed showing a plot of ground anchor movement versus load for each load increment in the proof test. Graph shall be approved by the Engineer prior to use.

## ANCHOR LOAD TEST ACCEPTANCE CRITERIA

A tested ground anchor with a 10 minute load-hold is acceptable if:

A. The ground anchor will carry the maximum test load with less than 0.04 inches of movement between 1 minute and 10 minutes, and

B. The total movement at the maximum test load exceeds 80% of the theoretical elongation of the unbonded length.

A tested ground anchor with a 60 minute load-hold is acceptable if:

A. The anchor will carry the maximum test load with a creep rate that does not exceed 0.08 inches in the last log cycle of time, and

B. The total movement at the maximum test load exceeds 80% of the theoretical elongation of the unbonded length.

A ground anchor which has a creep rate greater than 0.08 inch per log cycle of time can be incorporated into the structure at a design load equal to one-half of its failure load. The failure load is the load resisted by the ground anchor after the load has been allowed to stabilize for 10 minutes.

When a ground anchor fails, the Contractor shall modify the design and/or the installation procedures. These modifications may include, but are not limited to, installing a replacement ground anchor, reducing the design load by increasing the number of ground anchors, modifying the installation methods, increasing the bond length or changing the ground anchor type.

Lock-Off: Upon completion of the anchor test, the load must be reduced to the lock-off load indicated on the performance and proof test schedules and transferred to the anchorage device. The anchor may be completely unloaded prior to lock-off. After transferring the load, and prior to removing the jack, a lift-off reading shall be taken. The lift-off reading shall be within 10 percent of the specified lock-off load, the anchorage shall be reset and another lift-off reading shall be made.

### PERFORMANCE TEST DATA

| % DL | LOAD | PRESS. | DIAL | % DL | LOAD | PRESS. | DIAL |
|---|---|---|---|---|---|---|---|
| AL | | | | AL | | | |
| 25* | | | | 25 | | | |
| AL | | | | 50 | | | |
| 25 | | | | 75 | | | |
| 50* | | | | 100 | | | |
| AL | | | | 120* | | | |
| 25 | | | | AL | | | |
| 50 | | | | 25 | | | |
| 75* | | | | 50 | | | |
| AL | | | | 75 | | | |
| 25 | | | | 100 | | | |
| 50 | | | | 120* | | | |
| 75 | | | | 133* | | | |
| 100* | | | | L.O. | | | |

Performance Test Remarks: _____

Anchor No. _____ Design Load: _____

### PROOF TEST DATA

| % DL | LOAD | PRESS. | DIAL | DEFL. | REMARKS |
|---|---|---|---|---|---|
| AL | | | | | |
| 25 | | | | | |
| 50 | | | | | |
| 75 | | | | | |
| 100 | | | | | |
| 120 | | | | | |
| 133 | | | | | |
| L.O. | | | | | |

Performance Test Remarks: _____

Anchor No. _____ Design Load: _____

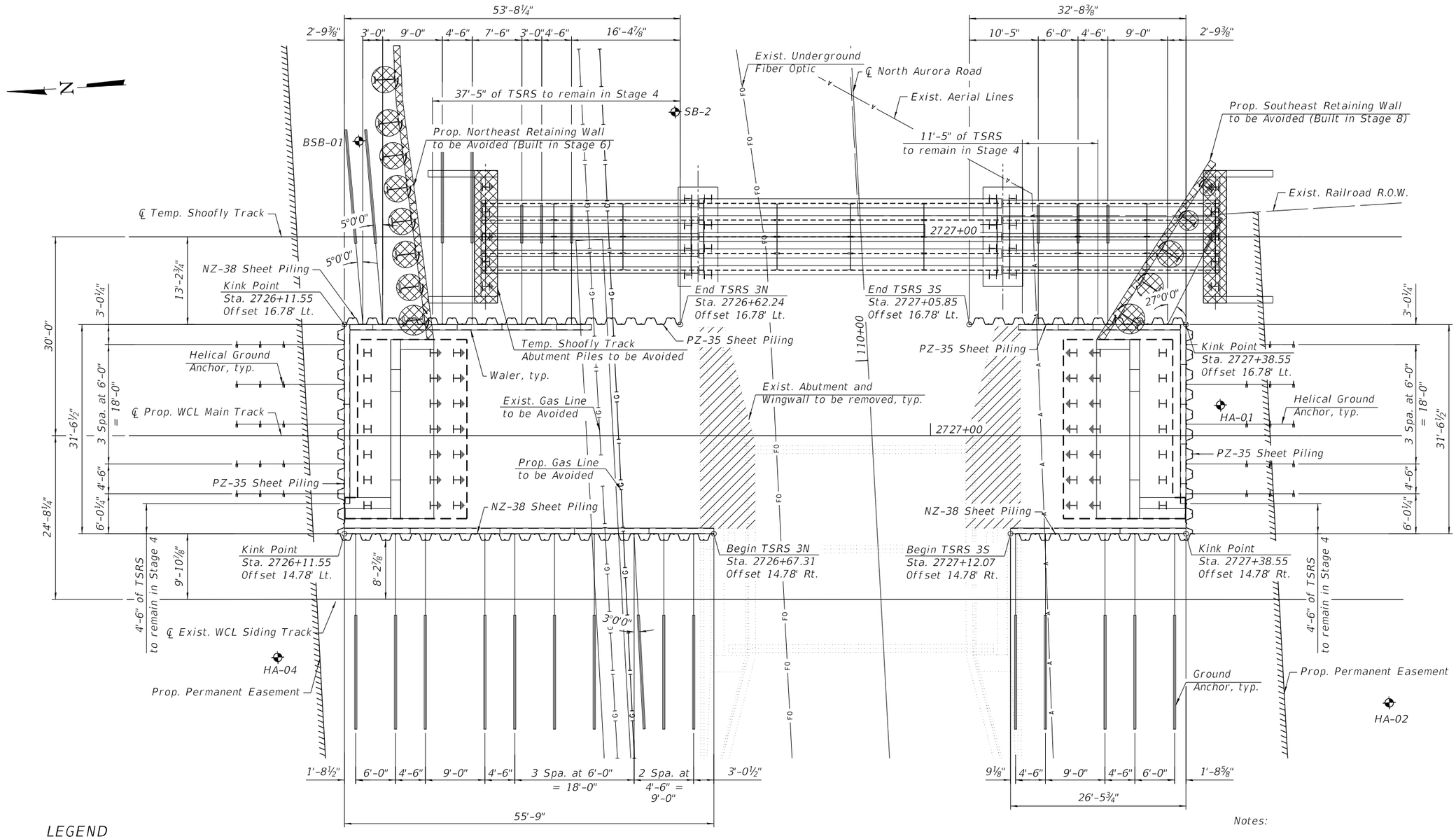


## LEGEND

- Elements to be Avoided
- Limits of Removal
- Exist. Aerial Lines
- Exist. Fiber Optic
- Prop. Underground Gas Line
- Sheet Piling
- Soil Boring

## PLAN - STAGE 3

Notes:

1. All sheeting shall be PZ 32 and ASTM A572 Grade 50.
2. See Sheets 10 thru 13 for Temporary Soil Retention System and Cross Sections.
3. See Sheet 14 for Temporary Soil Retention System Details.
4. Stations and offsets are measured from the ℄ Prop. WCL Main Track to the front face of the TSRS.
5. See Sheet 11 for General Notes and Proposed Construction Sequence.
6. Contractor is responsible for avoiding gas lines during ground anchor installation.

6:06:40 PM
FILE NAME: TSRS Stage 3 Plan

TRANSYSTEMS

| | | | |
|---|---|---|---|
| USER NAME = brvanderwal | DESIGNED - IS | REVISED - | |
| | CHECKED - WJC | REVISED - | |
| PLOT SCALE = 16.0034 ' / in. | DRAWN - IS | REVISED - | |
| PLOT DATE = 1/25/2025 | CHECKED - WJC | REVISED - | |

STATE OF ILLINOIS
DEPARTMENT OF TRANSPORTATION

TEMPORARY SOIL RETENTION SYSTEM PLAN - STAGE 3
STRUCTURE NO. 022-9948

SHEET 8 OF 45 SHEETS

| F.A.U. RTE. | SECTION | COUNTY | TOTAL SHEETS | SHEET NO. |
|---|---|---|---|---|
| 1509 | 06-00133-00-BR | DUPAGE | 426 | 165 |

CONTRACT NO. 61G79

ILLINOIS FED. AID PROJECT

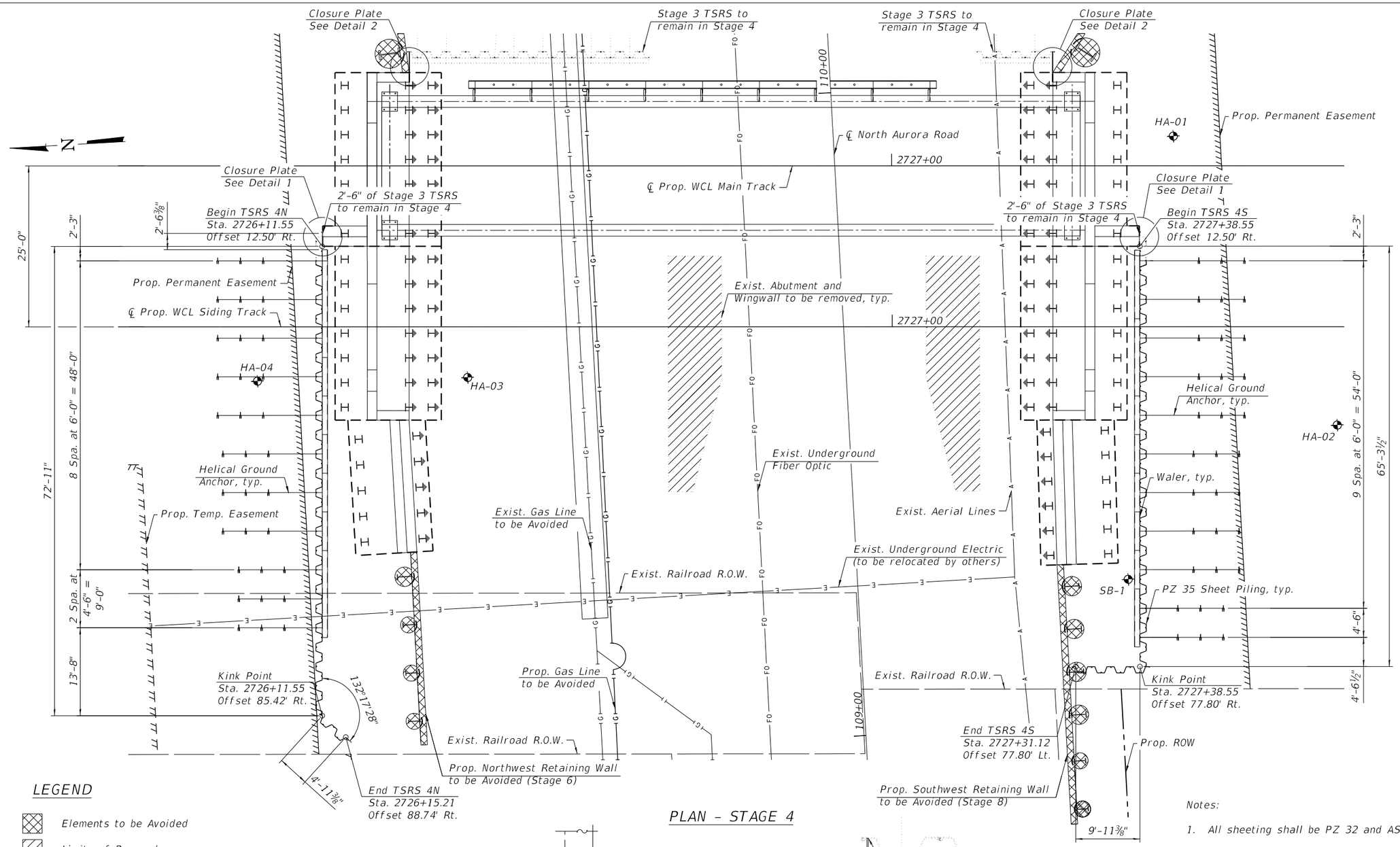


PLAN – STAGE 4

## LEGEND

- Elements to be Avoided
- Limits of Removal
- Exist. Aerial Lines
- Exist. Electric
- Exist. Fiber Optic
- Prop. Underground Gas Line
- Sheet Piling
- Soil Boring

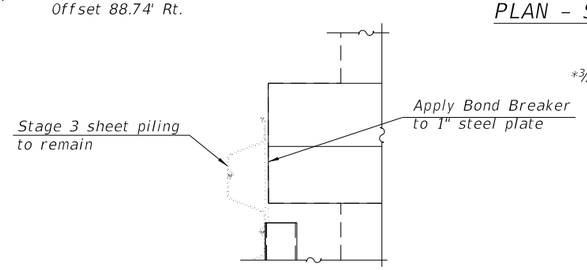


DETAIL 1

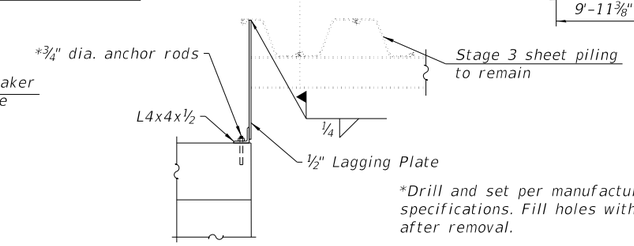


*Drill and set per manufacturer's specifications. Fill holes with grout after removal.

DETAIL 2

Notes:

1. All sheeting shall be PZ 32 and ASTM A572 Grade 50.
2. See Sheets 10 thru 13 for Temporary Soil Retention System and Cross Sections.
3. See Sheet 14 for Temporary Soil Retention System Details.
4. Stations and offsets are measured from the ℄ Prop. WCL Main Track to the front face of the TSRS.
5. See Sheet 11 for General Notes and Proposed Construction Sequence.
6. Contractor is responsible for avoiding gas lines during ground anchor installation.

6:06:43 PM
FILE NAME: TSRS Stage 4 Plan

TRANSYSTEMS

| | | | |
|---|---|---|---|
| USER NAME = brvanderwal | DESIGNED - IS | REVISED - | |
| | CHECKED - WJC | REVISED - | |
| PLOT SCALE = 16.0000 ' / in. | DRAWN - IS | REVISED - | |
| PLOT DATE = 1/25/2025 | CHECKED - WJC | REVISED - | |

STATE OF ILLINOIS
DEPARTMENT OF TRANSPORTATION

TEMPORARY SOIL RENTENTION SYSTEM PLAN - STAGE 4
STRUCTURE NO. 022-9948

SHEET 9 OF 45 SHEETS

| F.A.U. RTE. | SECTION | COUNTY | TOTAL SHEETS | SHEET NO. |
|---|---|---|---|---|
| 1509 | 06-00133-00-BR | DUPAGE | 426 | 166 |

CONTRACT NO. 61G79

ILLINOIS | FED. AID PROJECT

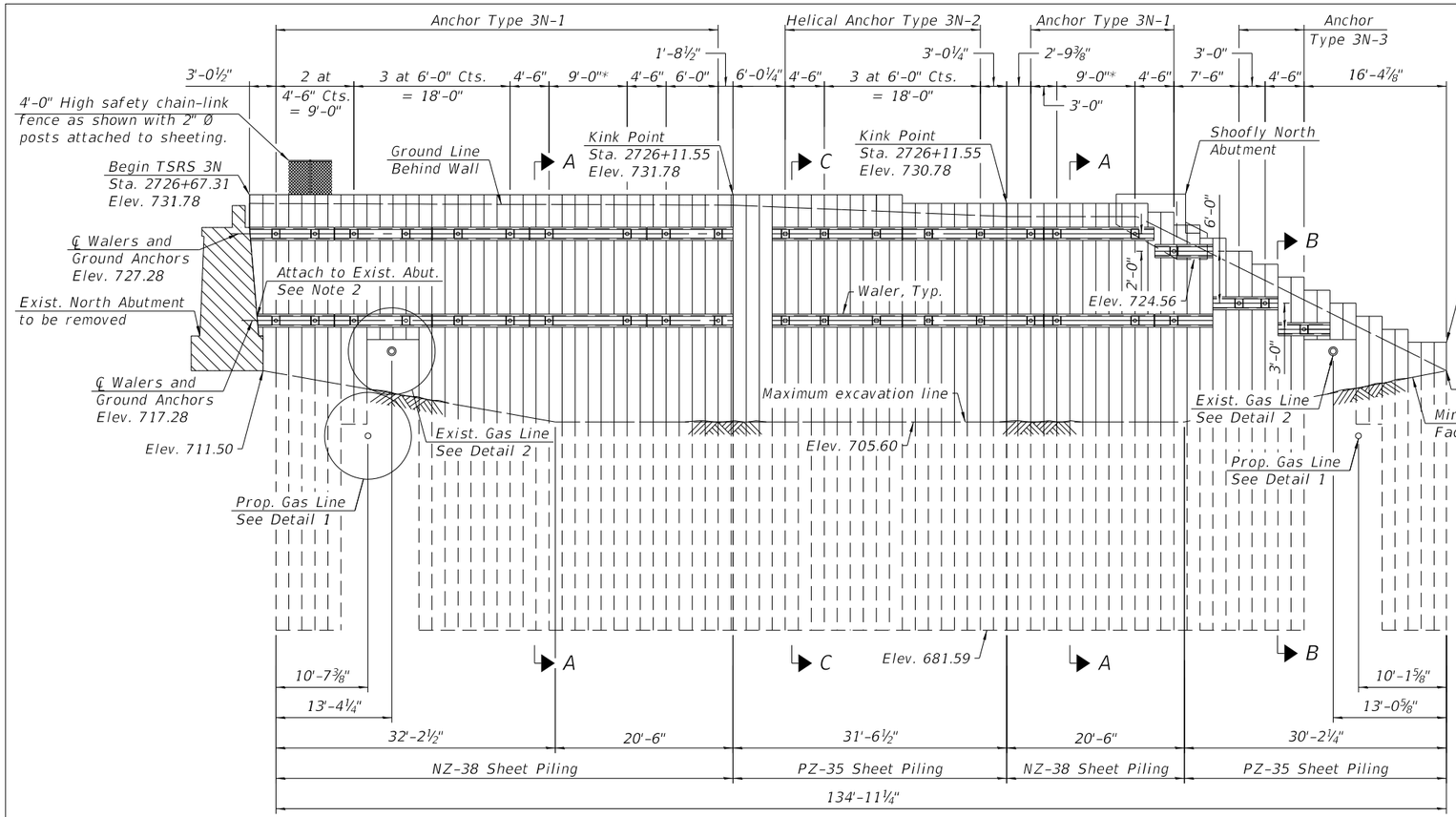


## TEMPORARY SOIL RETENTION SYSTEM - ELEVATION
## NORTH ABUTMENT - STAGE 3

(Looking North, Unfolded View, Measured along F.F. of Wall)

* These anchors are specially designed due to a wider spacing and denoted as SP on the Ground Anchor Schedule on Sheet 14. Waler must be continuous between the two anchors as shown on the Elevation View.

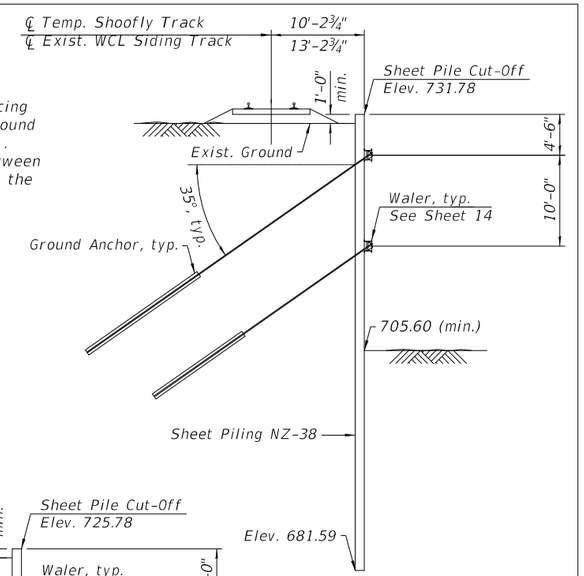


## SECTION A-A

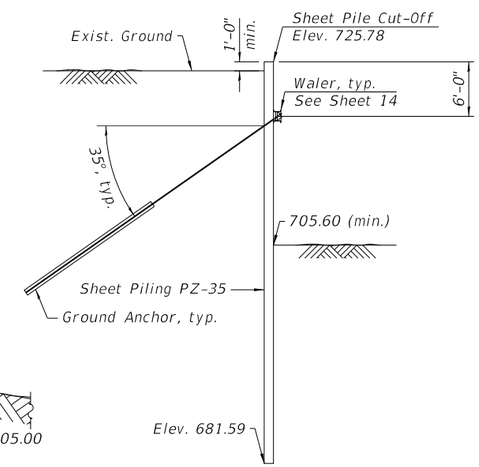


## SECTION B-B

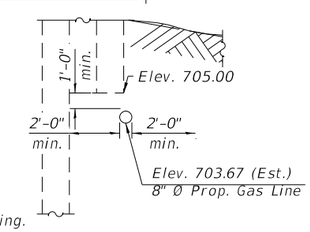


## DETAIL 1

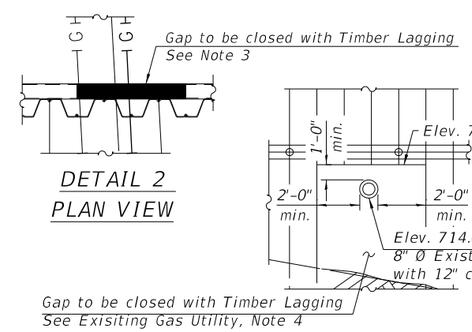


## DETAIL 2
## PLAN VIEW

## DETAIL 2

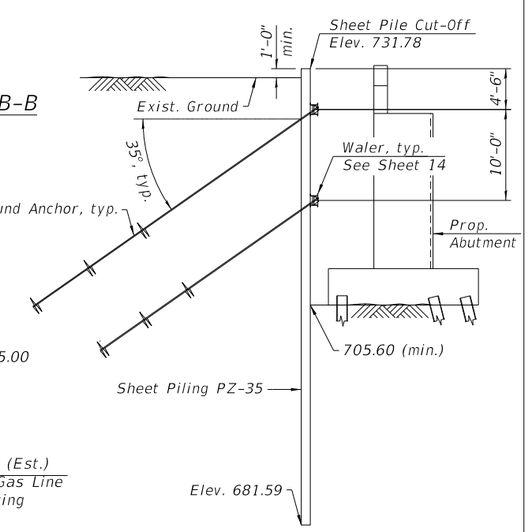


## SECTION C-C

### EXISTING GAS UTILITY

1. Temporary Soil Retention System shall be constructed to avoid the exisitng gas line. After installation and excavation of the Temporary Soil Retention System, the portion of the exisiting gas line within the limits of the Temporary Soil Retention System shall be removed.
2. Before driving sheet piling over the existing utility structure, the Contractor shall verify the location and depth of the structure by probing.
3. Sheet piling shall not be driven to embedment depth shown on plans at the location of the existing gas line as shown on Sheet 8.
4. Once the existing gas main is removed, the gap within the Temporary Soil Retention System will then be covered with Timber Lagging.

### PROPOSED 8" GAS UTILITY:

1. The proposed gas line will be installed by utility company before the installation of TSRS. Service shall be maintained through the proposed gas line throughout the duration of the project.
2. Before driving sheet piling over the proposed utility structure, the Contractor shall verify the location and depth of the structure by probing.
3. Sheet piling shall not be driven to embedment depth shown on plans at the location of the proposed gas line as shown on Sheet 8.
4. Prior to driving sheet piling, the Contractor shall submit to the Engineer a contingency plan in the event the gas line is damaged or becomes unserviceable during construction. Any disruptions to the proposed gas line utility service shall be repaired at the expense of the Contractor.

## TSRS 3N BILL OF MATERIAL

| Item | Unit | Total |
|---|---|---|
| Temporary Soil Retention System (Special) | Sq. Ft. | 2,856 |
| *Walers | Pound | 19,730 |
| *Ground Anchors | Each | 31 |
| *Helical Ground Anchors | Each | 10 |

*For information only. Cost included with Temporary Soil Retention System (Special).

(Walers include weight of all structural steel related to waler system.)

Note:
1. See Sheet 11 for General Notes and Proposed Construction Sequence.
2. See Sheet 14 for Backwall to Sheet Pile Connection Detail and Fence Connection Detail.
4. Timber lagging shall be Sourthern Pine, No. 2 with a minimum allowable bending stress of 1000 psi and no less than a 3 in. nominal rough-sawn thickness.

6:06:47 PM
FILE NAME: TSRS Stage 3N Elevation and Cross Sections

TRANSYSTEMS

| | | | |
|---|---|---|---|
| USER NAME = brvanderwal | DESIGNED - IS | REVISED - | |
| | CHECKED - WJC | REVISED - | |
| PLOT SCALE = 0.1667 ' / in. | DRAWN - IS | REVISED - | |
| PLOT DATE = 1/25/2025 | CHECKED - WJC | REVISED - | |

STATE OF ILLINOIS
DEPARTMENT OF TRANSPORTATION

TEMPORARY SOIL RETENTION SYSTEM ELEV. - N. ABUT - STAGE 3
STRUCTURE NO. 022-9948

SHEET 10 OF 45 SHEETS

| F.A.U. RTE. | SECTION | COUNTY | TOTAL SHEETS | SHEET NO. |
|---|---|---|---|---|
| 1509 | 06-00133-00-BR | DUPAGE | 426 | 167 |

CONTRACT NO. 61G79

ILLINOIS | FED. AID PROJECT

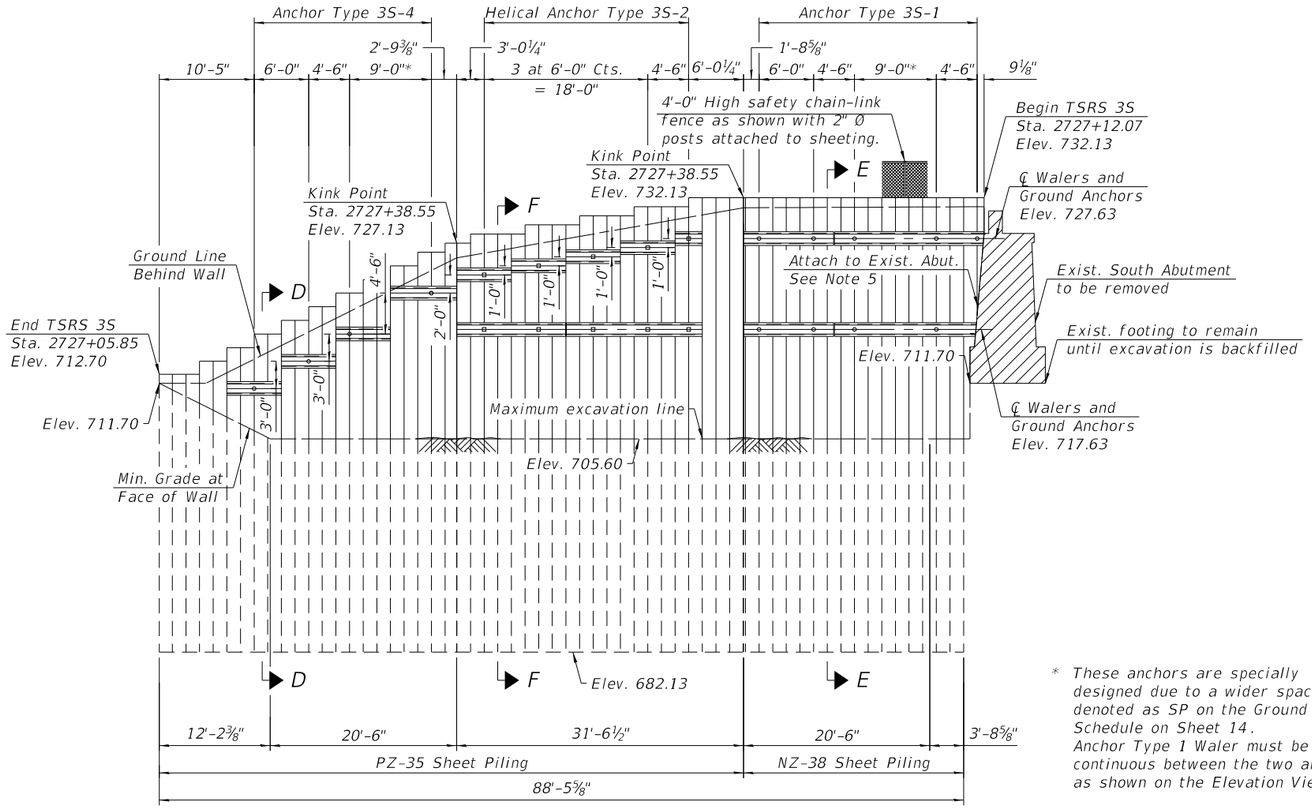


* These anchors are specially designed due to a wider spacing and denoted as SP on the Ground Anchor Schedule on Sheet 14. Anchor Type 1 Waler must be continuous between the two anchors as shown on the Elevation View.

## TEMPORARY SOIL RETENTION SYSTEM - ELEVATION SOUTH ABUTMENT - STAGE 3

(Looking South, Unfolded View, Measured along F.F. of Wall)

### GENERAL NOTES:

1. Contractor shall verify location of all existing utility structures to be discontinued and confirm they have been discontinued prior to installation of sheet piling and anchors.
2. Contractor shall cease installation operations prior to impacting the discontinued utilities. Prior to commencing activities, Contractor shall determine a method of severing or penetrating the existing utility structures without damaging sheet pile toes. All mitigation actions shall be approved by the Engineer.
3. Any sheet piling or anchor modifications required to avoid interference with existing or proposed utility structures shall be approved by the Engineer.
4. Cost to repair any sheet piling or ground anchors damaged by impacting existing utility structures shall be at the expense of the Contractor.
5. See Sheet 14 for Backwall to Sheet Pile Connection Detail and Fence Connection Detail.
6. The Contractor shall connect the first sheet to the existing abutment wall to ensure stability of sheets driven to the top of existing footing. This connection shall be reviewed and accepted by the Engineer and included in the cost for Temporary Soil Retention System (Special).

### PROPOSED CONSTRUCTION SEQUENCE (PER STAGE):

1. Construction of TSRS 3N and 3S shall begin at the start of Stage 3 ahead of all excavation for proposed railroad bridge substructure. Construction of TSRS 4N and 4S shall begin at the start of Stage 4 ahead of all excavation for proposed railroad bridge substructure.
2. Drive sheet piles to toe elevations shown. All modifications required to avoid existing utilities shall be approved by the Engineer.
3. Excavate approximately 1'-0" below elevation of top row of ground anchors. Drill and install anchors. Do not further excavate below anchor elevations until all anchors are stressed and load locked in. See sheet 7 of 45 for details on anchor installation requirements.
4. Repeat operation 3 for each level of ground anchors.
5. Excavate to final stage ground elevation shown.
6. Construct abutment. Install temporary closure plates.
7. Backfill to approximately 1'-0" below elevation of bottom row of ground anchors. Remove bottom row of anchors.
8. Repeat operation 7 for each level of ground anchors. Backfill to finished grade.
9. Remove all remaining elements of the Temporary Soil Retention System with portions to remain as indicated.

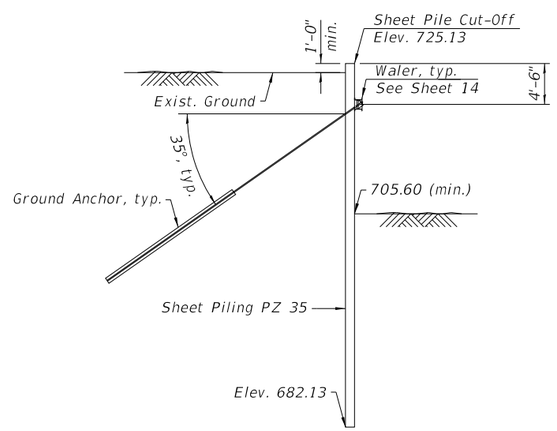


## SECTION D-D

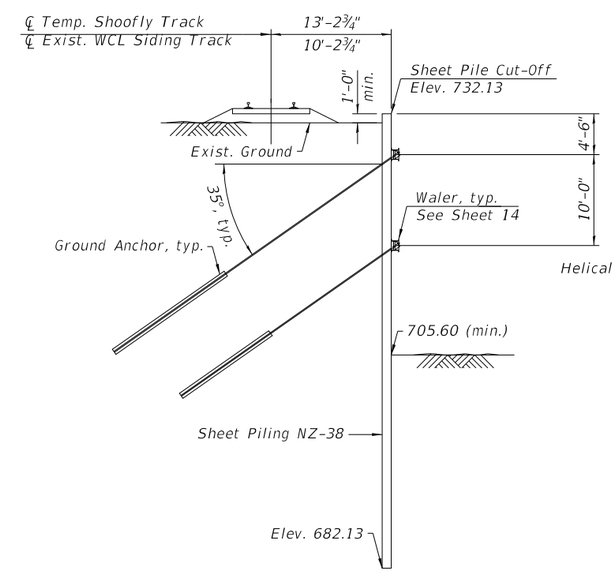


## SECTION E-E

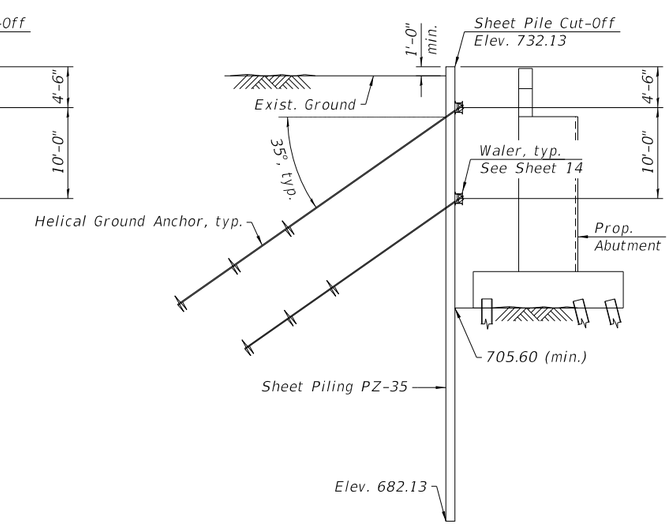


## SECTION F-F

## TSRS 3S BILL OF MATERIAL

| Item | Unit | Total |
|---|---|---|
| Temporary Soil Retention System (Special) | Sq. Ft. | 1,723 |
| *Walers | Pound | 11,780 |
| *Ground Anchors | Each | 13 |
| *Helical Ground Anchors | Each | 10 |

*For information only. Cost included with Temporary Soil Retention System (Special).

(Walers include weight of all structural steel related to waler system.)

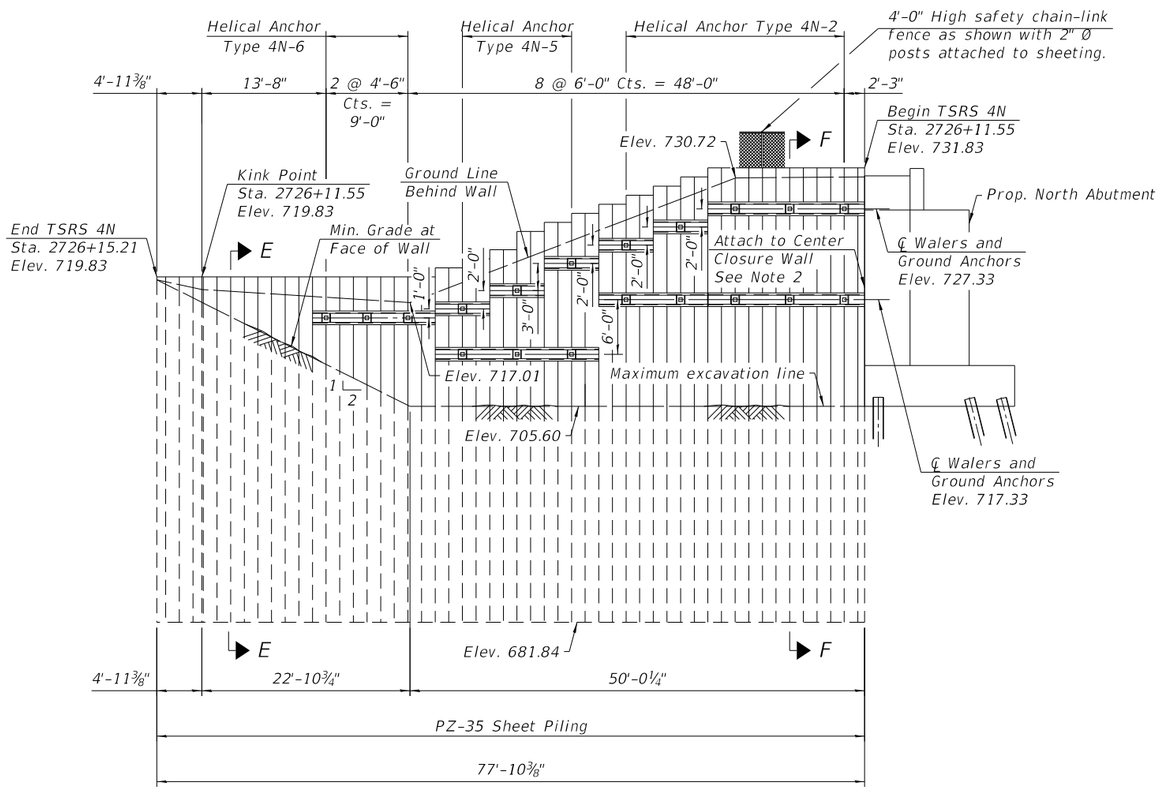


## TEMPORARY SOIL RETENTION SYSTEM - ELEVATION
## NORTH ABUTMENT - STAGE 4

(Looking North, Unfolded View, Measured along F.F. of Wall)

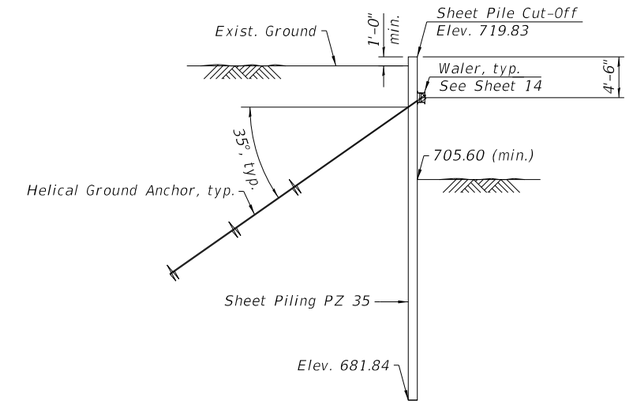


## SECTION E-E

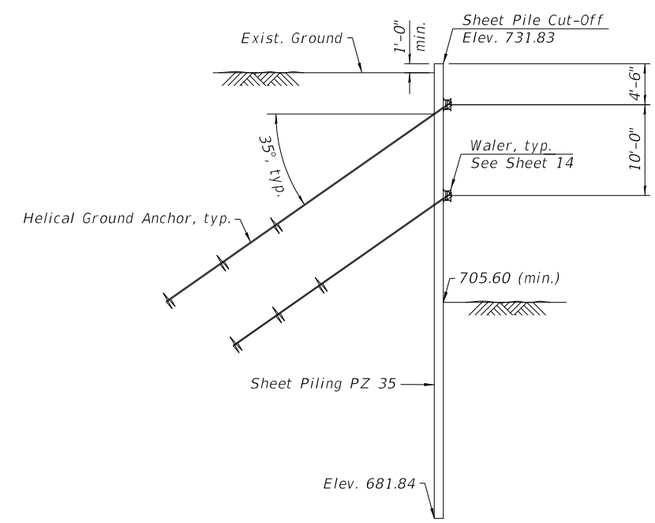


## SECTION F-F

## TSRS 4N BILL OF MATERIAL

| Item | Unit | Total |
|---|---|---|
| Temporary Soil Retention System (Special) | Sq. Ft. | 1,163 |
| *Walers | Pound | 9,190 |
| *Helical Ground Anchors | Each | 19 |

*For information only. Cost included with Temporary Soil Retention System (Special).

(Walers include weight of all structural steel related to waler system.)

Note:
1. See Sheet 11 for General Notes and Proposed Construction Sequence.
2. See Sheet 9 for Bond Breaker Details.
3. See Sheet 14 for Fence Connection Detail.

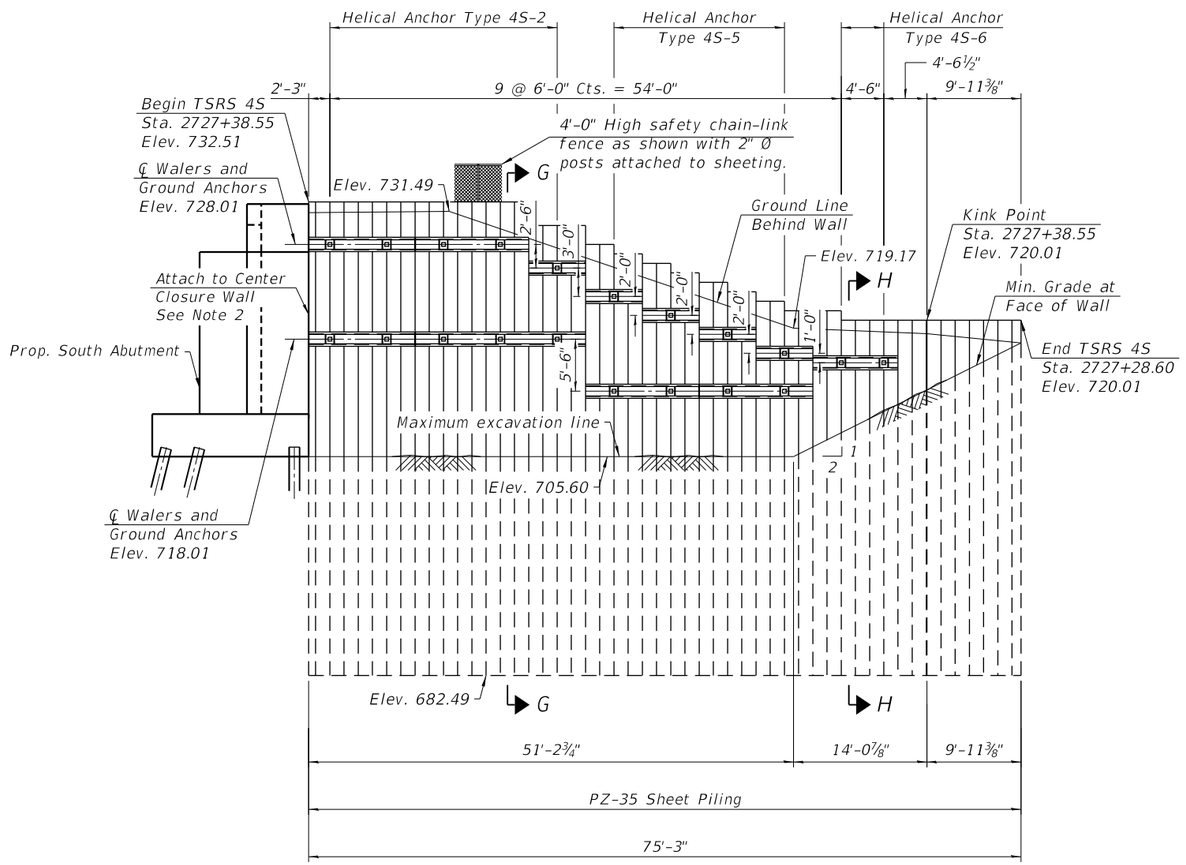


## TEMPORARY SOIL RETENTION SYSTEM - ELEVATION
## SOUTH ABUTMENT - STAGE 4

(Looking South, Unfolded View, Measured along F.F. of Wall)

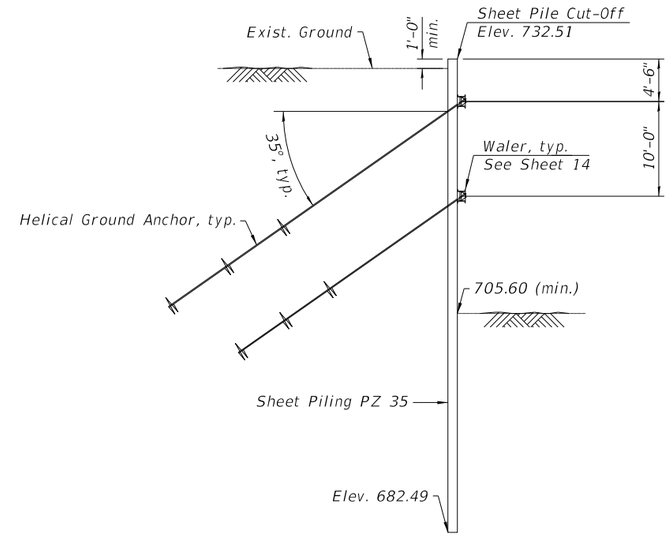


## SECTION G-G

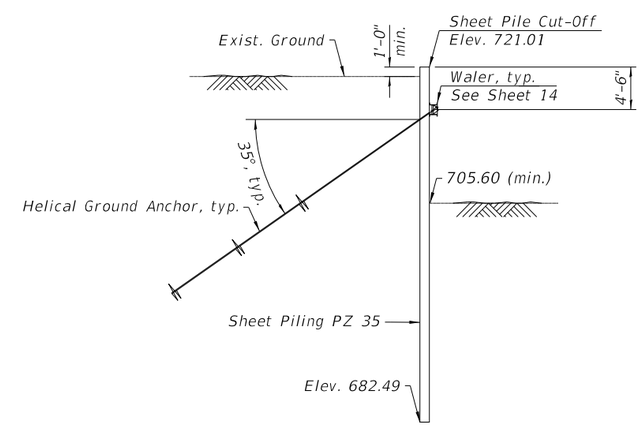


## SECTION H-H

## TSRS 4S BILL OF MATERIAL

| Item | Unit | Total |
|---|---|---|
| Temporary Soil Retention System (Special) | Sq. Ft. | 1,269 |
| *Walers | Pound | 9,780 |
| *Helical Ground Anchors | Each | 20 |

*For information only. Cost included with Temporary Soil Retention System (Special).

(Walers include weight of all structural steel related to waler system.)

Note:
1. See Sheet 11 for General Notes and Proposed Construction Sequence.
2. See Sheet 9 for Bond Breaker Details.
3. See Sheet 14 for Fence Connection Detail.

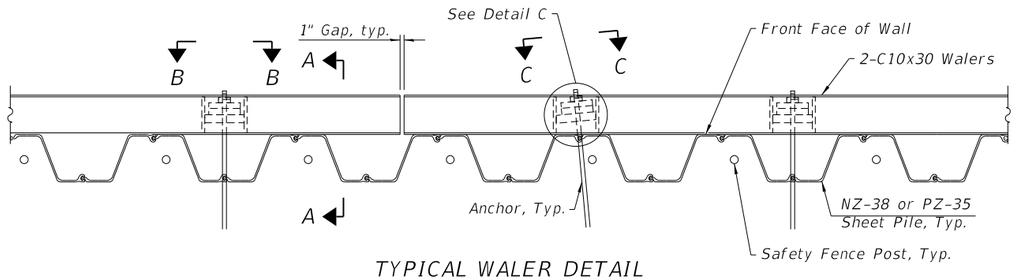


TYPICAL WALER DETAIL

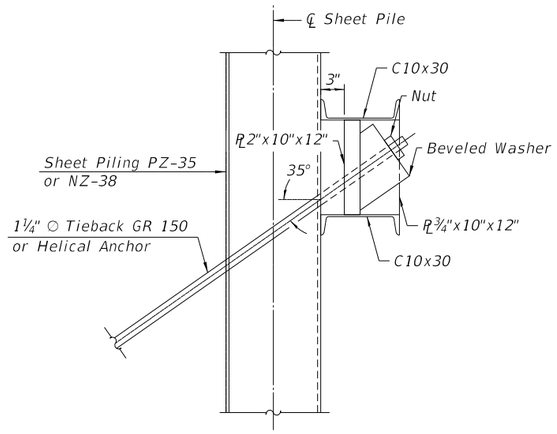


SECTION A-A

(Vertically Angled Anchors)

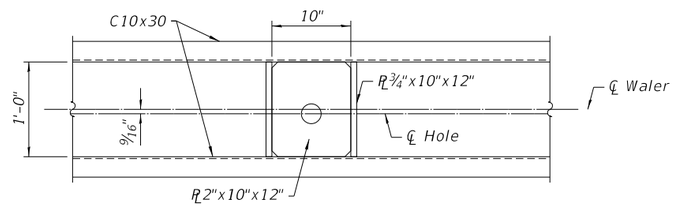


VIEW B-B

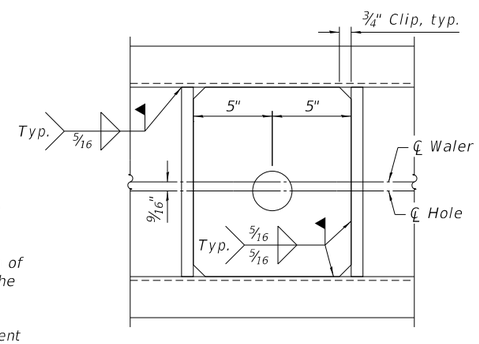


VIEW C-C

Notes:

1. All structural steel shall meet the requirements of ASTM A572 Grade 50.
2. All bolts, nuts and washers shall meet the requirements of ASTM F3125 Grade A325, ASTM A563 and ASTM F436, respectively.
3. Anchors and walers must be installed when bottom of excavation is a maximum of 1'-0" below the level of walers. The removal process shall be the reverse of the installation process.
4. Sheeting is to be removed after backfilling is complete or temporary embankment is removed. Walers and ground anchor system must be removed during backfilling.
5. All sheet piling, walers, ground anchors, miscellaneous steel shapes, and connecting hardware required for temporary sheet piling will be paid for under the "Temporary Soil Retention System (Special)" item.
6. All elevations and dimensions must be verified in the field.
7. Contractor shall verify that each ground anchor does not interfere with existing or proposed utility structures prior to installation. Any anchor modifications required to avoid interference with existing or proposed utility structures shall be approved by the Engineer.
8. Any excavation beyond limits shown must be approved by the Engineer.
9. If the temporary soil retention system outlined in these plans is not used, the Contractor must provide design calcuations and working drawings of the soil retention system stamped by a licensed Illinois Structural Engineer.
10. See Special Provision "Ground Anchors" and "Helical Ground Anchors" for information regarding ground anchors for "Temporary Soil Retention System (Special)".
11. Safety fence shall be according to Article 664 in the Standard Specifications. Cost included with "Temporary Soil Retention System (Special)". See Hwy. Std. 664001.

## GROUND ANCHOR SCHEDULE

| Type | Design Load (kips) | Elevation (feet) | Angle (degrees) | Min. Unbonded Length (feet) | Est. Bonded Length (feet) | Total Length (feet) |
|---|---|---|---|---|---|---|
| 3N-1T | 48.13 | 727.28 | 35 | 15 | 22 | 37 |
| 3N-1T-SP | 53.63 | 727.28 | 35 | 15 | 24 | 39 |
| 3N-1T-2 | 48.13 | 725.28 | 35 | 15 | 22 | 37 |
| 3N-1B | 48.41 | 717.28 | 35 | 15 | 22 | 37 |
| 3N-1B-SP | 53.11 | 717.28 | 35 | 15 | 24 | 39 |
| 3N-2T | 28.14 | 727.28 | 35 | 11 | 9 | 20 |
| 3N-2B | 31.60 | 717.28 | 35 | 13 | 9 | 22 |
| 3N-3T | 27.14 | 719.28 | 35 | 15 | 12 | 27 |
| 3N-3T-2 | 27.14 | 719.28 | 35 | 15 | 12 | 27 |
| 3S-1T | 48.13 | 727.63 | 35 | 15 | 22 | 37 |
| 3S-1T-SP | 53.63 | 727.63 | 35 | 15 | 24 | 39 |
| 3S-1B | 48.41 | 717.63 | 35 | 15 | 22 | 37 |
| 3S-1B-SP | 53.11 | 717.63 | 35 | 15 | 24 | 39 |
| 3S-2T | 28.14 | 727.63 | 35 | 11 | 9 | 20 |
| 3S-2T-2 | 28.14 | 726.63 | 35 | 11 | 9 | 20 |
| 3S-2T-3 | 28.14 | 725.63 | 35 | 11 | 9 | 20 |
| 3S-2T-4 | 28.14 | 724.63 | 35 | 11 | 9 | 20 |
| 3S-2T-5 | 28.14 | 723.63 | 35 | 11 | 9 | 20 |
| 3S-2B | 31.60 | 717.63 | 35 | 13 | 9 | 22 |
| 3S-4T-SP | 17.39 | 721.63 | 35 | 15 | 8 | 23 |
| 3S-4T-2-SP | 17.39 | 717.13 | 35 | 15 | 8 | 23 |
| 3S-4T-3 | 15.55 | 714.13 | 35 | 15 | 7 | 22 |
| 3S-4T-4 | 15.55 | 711.13 | 35 | 15 | 7 | 22 |
| 4N-2T | 28.14 | 727.33 | 35 | 11 | 9 | 20 |
| 4N-2T-2 | 28.14 | 725.33 | 35 | 11 | 9 | 20 |
| 4N-2T-3 | 28.14 | 723.33 | 35 | 11 | 9 | 20 |
| 4N-2B | 31.60 | 717.33 | 35 | 13 | 9 | 22 |
| 4N-5T | 24.88 | 721.33 | 35 | 10 | 9 | 19 |
| 4N-5T-2 | 24.88 | 718.33 | 35 | 10 | 9 | 19 |
| 4N-5T-3 | 24.88 | 716.33 | 35 | 10 | 9 | 19 |
| 4N-5B | 22.20 | 711.33 | 35 | 10 | 9 | 19 |
| 4N-6T | 17.97 | 715.33 | 35 | 7 | 9 | 16 |
| 4S-2T | 28.14 | 728.01 | 35 | 11 | 9 | 20 |
| 4S-2T-2 | 28.14 | 725.51 | 35 | 11 | 9 | 20 |
| 4S-2B | 31.60 | 718.01 | 35 | 13 | 9 | 22 |
| 4S-5T | 24.88 | 722.51 | 35 | 10 | 9 | 19 |
| 4S-5T-2 | 24.88 | 720.51 | 35 | 10 | 9 | 19 |
| 4S-5T-3 | 24.88 | 718.51 | 35 | 10 | 9 | 19 |
| 4S-5T-4 | 24.88 | 716.51 | 35 | 10 | 9 | 19 |
| 4S-5B | 22.20 | 712.51 | 35 | 10 | 9 | 19 |
| 4S-6T | 17.97 | 715.51 | 35 | 7 | 9 | 16 |

T = Top Anchor

B = Bottom Anchor

SP = Special Anchor

Note:
Estimated bonded and unbonded lengths are specified in the ground anchor schedule; actual length and depth required to develop the design load specified shall be determined by the anchor supplier. Minimum ultimate load capacity shall be 2 x design load. Changes in bonded and unbonded length shall be approved by the Engineer.

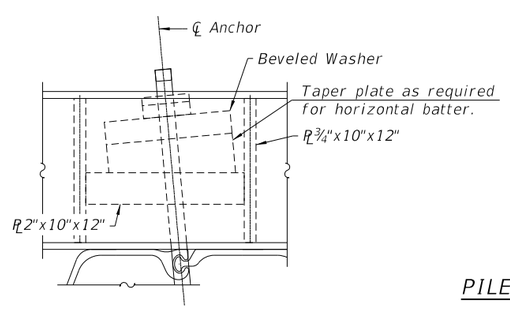


DETAIL C

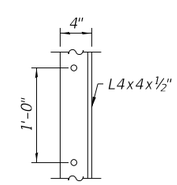


BACKWALL SHEET PILE CONNECTION BRACKET

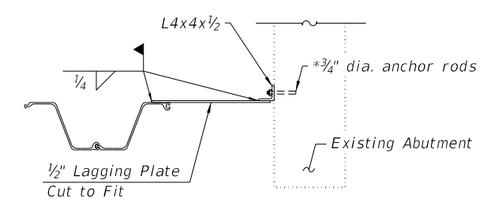


BACKWALL TO SHEET PILE CONNECTION DETAIL

*Drill and set per manufacturer's specifications

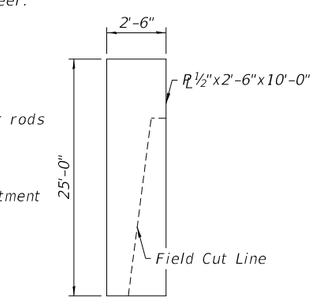


CONNECTION PLATE

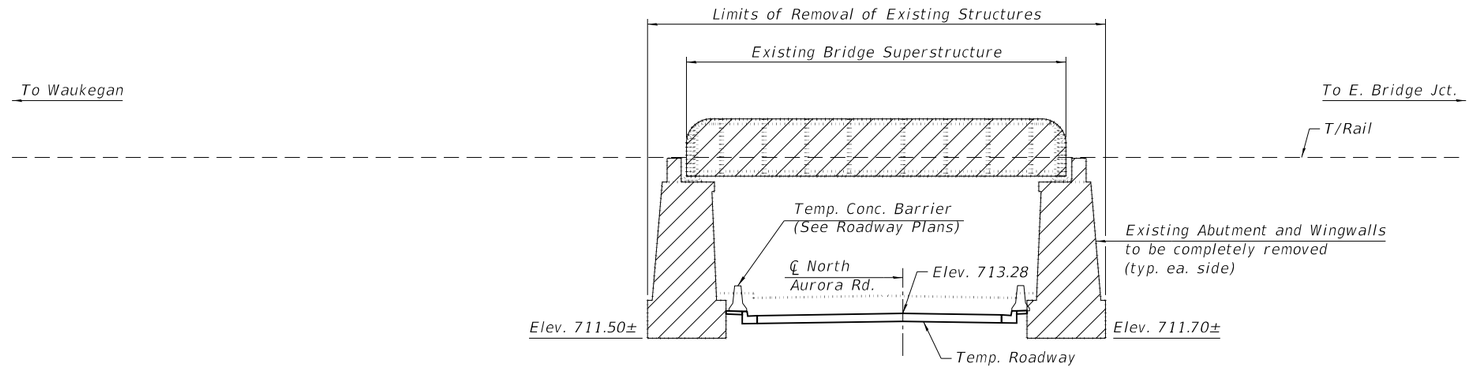


ELEVATION

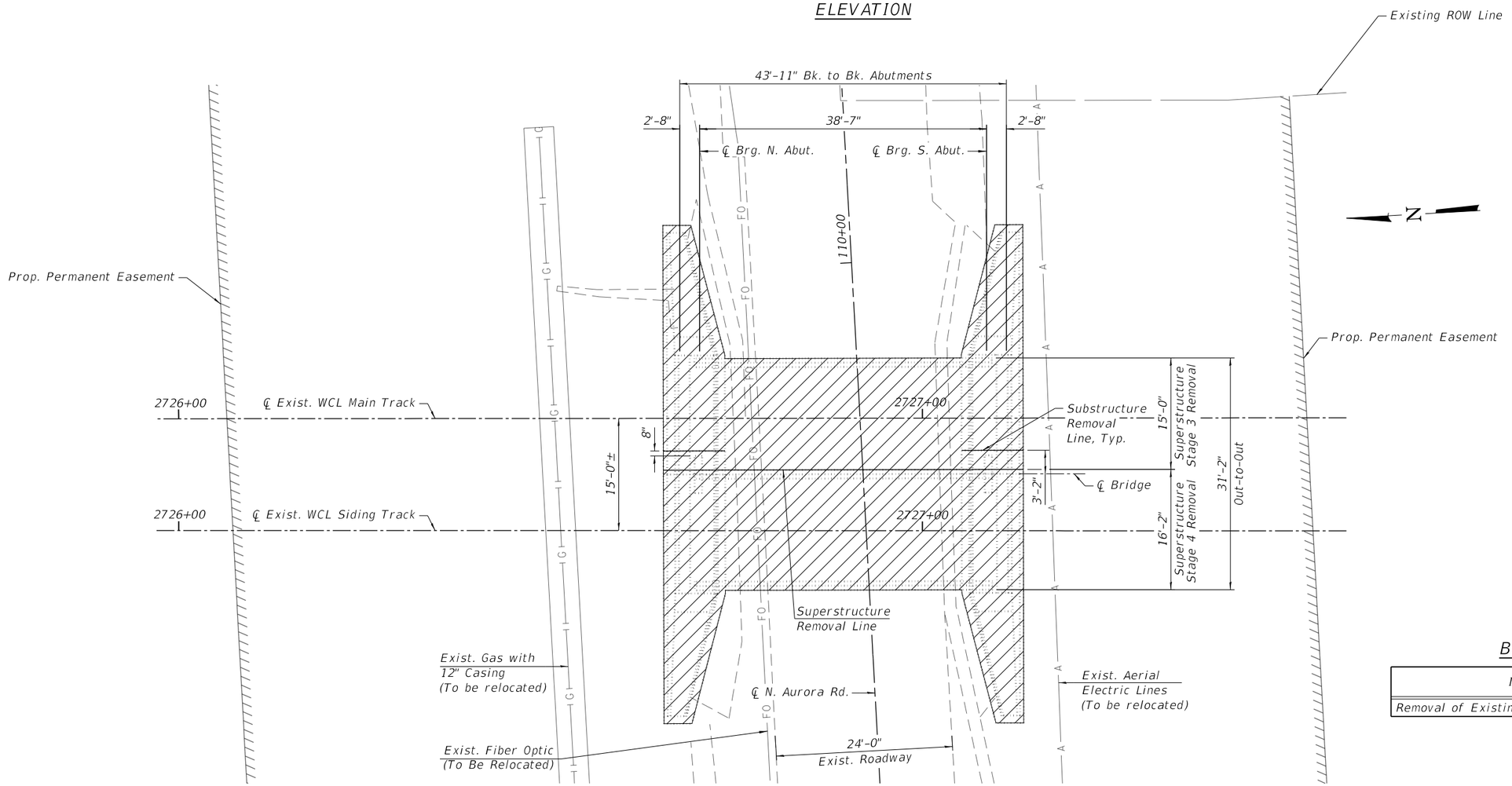


PLAN

LEGEND:

Removal of Existing Structures

BILL OF MATERIAL

| Item | Unit | Total |
|---|---|---|
| Removal of Existing Structures | Each | 1 |

Note:
For substructure removal limits, see sheet 16 of 45.

607:03 PM
FILE NAME: Existing Structure Removal Details 1

TRANSYSTEMS

| | | | |
|---|---|---|---|
| USER NAME = brvanderwal | DESIGNED - JRM | REVISED - | |
| | CHECKED - MDS | REVISED - | |
| PLOT SCALE = 16.0000 ' / in. | DRAWN - GJZ | REVISED - | |
| PLOT DATE = 1/25/2025 | CHECKED - MDS | REVISED - | |

STATE OF ILLINOIS
DEPARTMENT OF TRANSPORTATION

EXISTING STRUCTURE REMOVAL DETAILS 1
STRUCTURE NO. 022-9948

SHEET 15 OF 45 SHEETS

| F.A.U. RTE. | SECTION | COUNTY | TOTAL SHEETS | SHEET NO. |
|---|---|---|---|---|
| 1509 | 06-00133-00-BR | DUPAGE | 426 | 172 |
| | | CONTRACT NO. 61G79 | | |
| | | ILLINOIS | FED. AID PROJECT | |

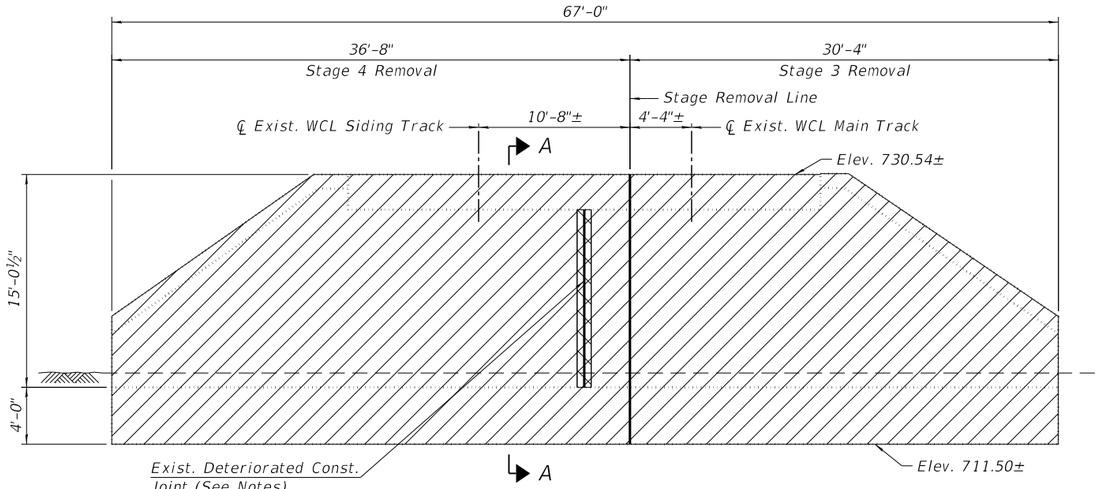


NORTH ABUTMENT ELEVATION

(Looking North)

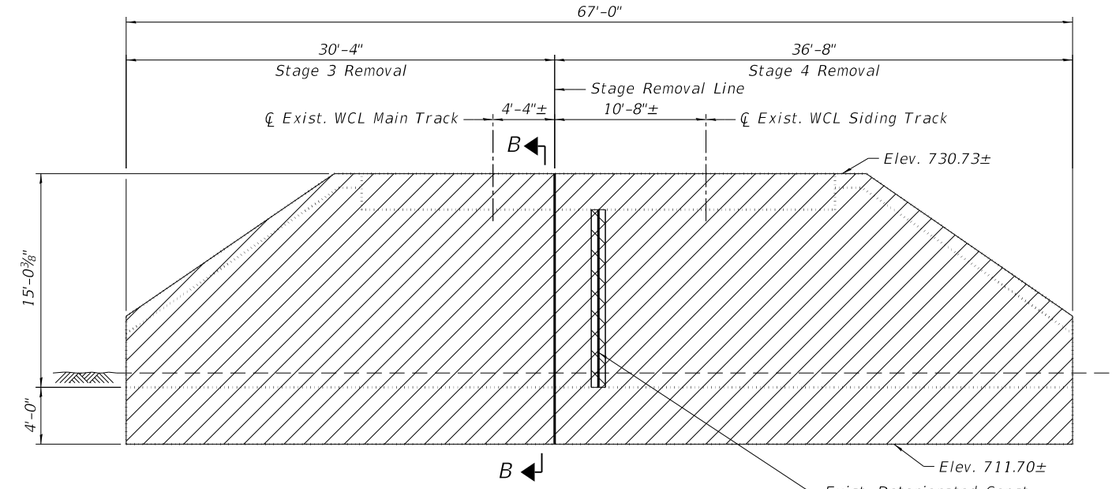


SOUTH ABUTMENT ELEVATION

(Looking South)

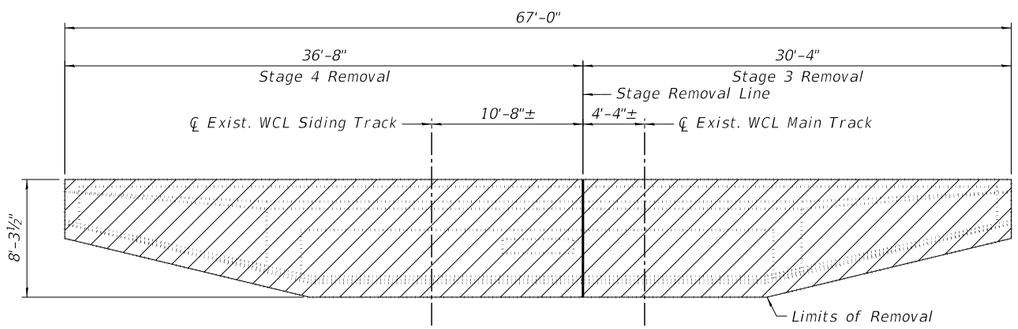


NORTH ABUTMENT FOUNDATION PLAN

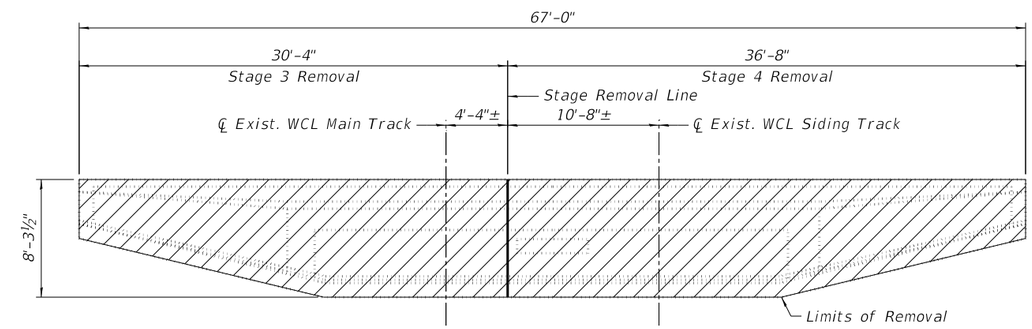


SOUTH ABUTMENT FOUNDATION PLAN

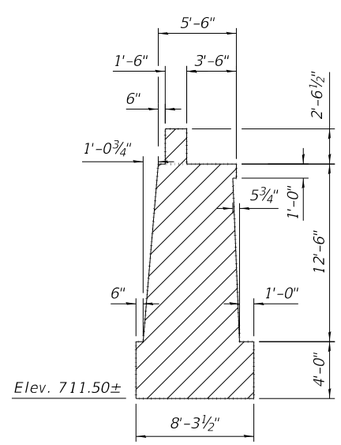


SECTION A-A

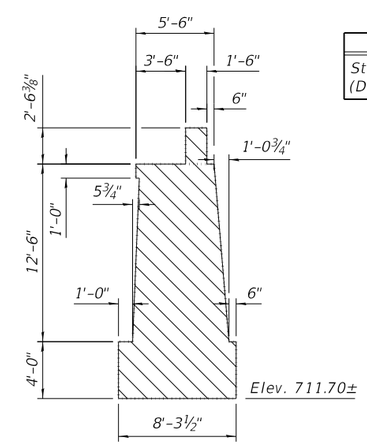


SECTION B-B

## BILL OF MATERIAL

| Item | Unit | Total |
|---|---|---|
| Structural Repair of Concrete (Depth Greater Than 5 Inches) | Sq. Ft. | 25 |

## LEGEND:

Removal of Existing Structures

Structural Repair of Concrete (Depth > 5 Inches)

Notes:
Exist. deteriorated construction joint to be formed and completely filled up to exist. bearing seat with pourable non-shrink grout prior to Stage 3 removal. Grout material to be approved by the Engineer.

6:07:05 PM
FILE NAME: Existing Structure Removal Details 2

TRANSYSTEMS

| | | | |
|---|---|---|---|
| USER NAME = brvanderwal | DESIGNED - JRM | REVISED - | |
| | CHECKED - MDS | REVISED - | |
| PLOT SCALE = 10.6667 ' / in. | DRAWN - GJZ | REVISED - | |
| PLOT DATE = 1/25/2025 | CHECKED - MDS | REVISED - | |

STATE OF ILLINOIS
DEPARTMENT OF TRANSPORTATION

EXISTING STRUCTURE REMOVAL DETAILS 2
STRUCTURE NO. 022-9948

SHEET 16 OF 45 SHEETS

| F.A.U. RTE. | SECTION | COUNTY | TOTAL SHEETS | SHEET NO. |
|---|---|---|---|---|
| 1509 | 06-00133-00-BR | DUPAGE | 426 | 173 |
| | | CONTRACT NO. 61G79 | | |
| | ILLINOIS | FED. AID PROJECT | | |

Notes:
For Detail A, see sheet 18 of 45 .
For Sections E-E and F-F, see sheet 20 of 45 .
Space h100(E) and u101(E) bars to miss anchor bolts.

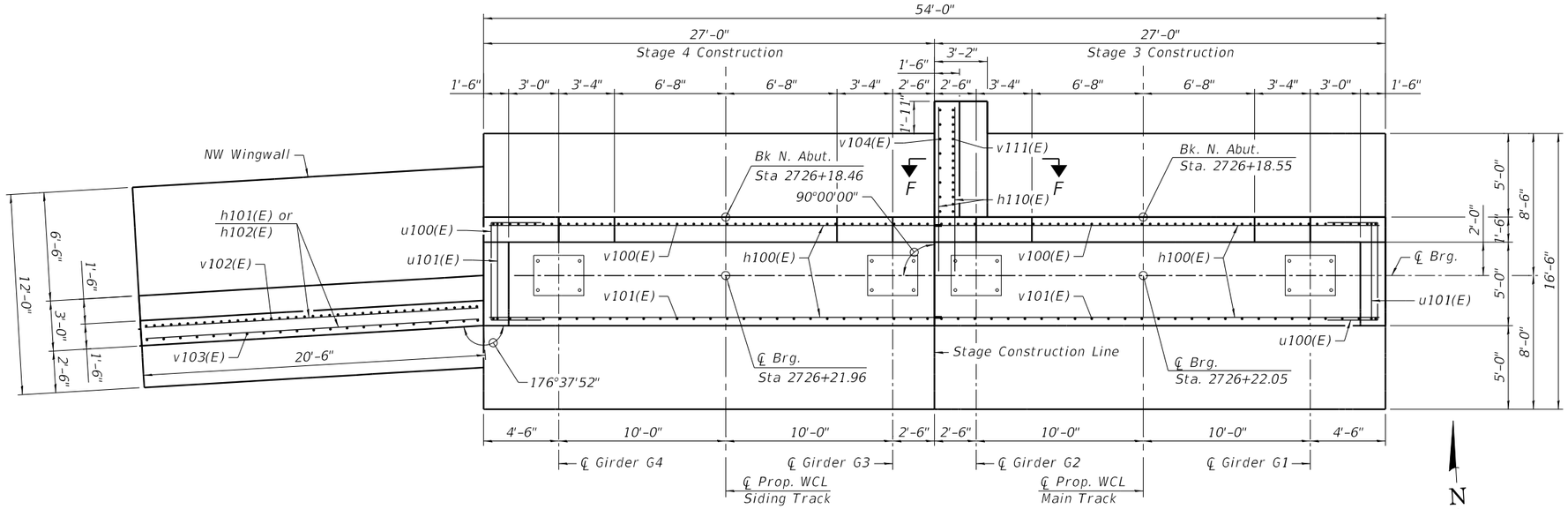


PLAN

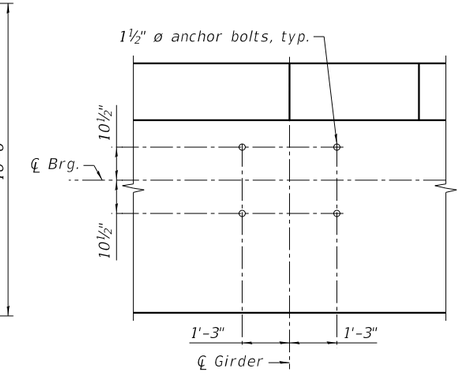


ANCHOR BOLT LAYOUT
(Typ. at Bearing Location - 4 Locations)

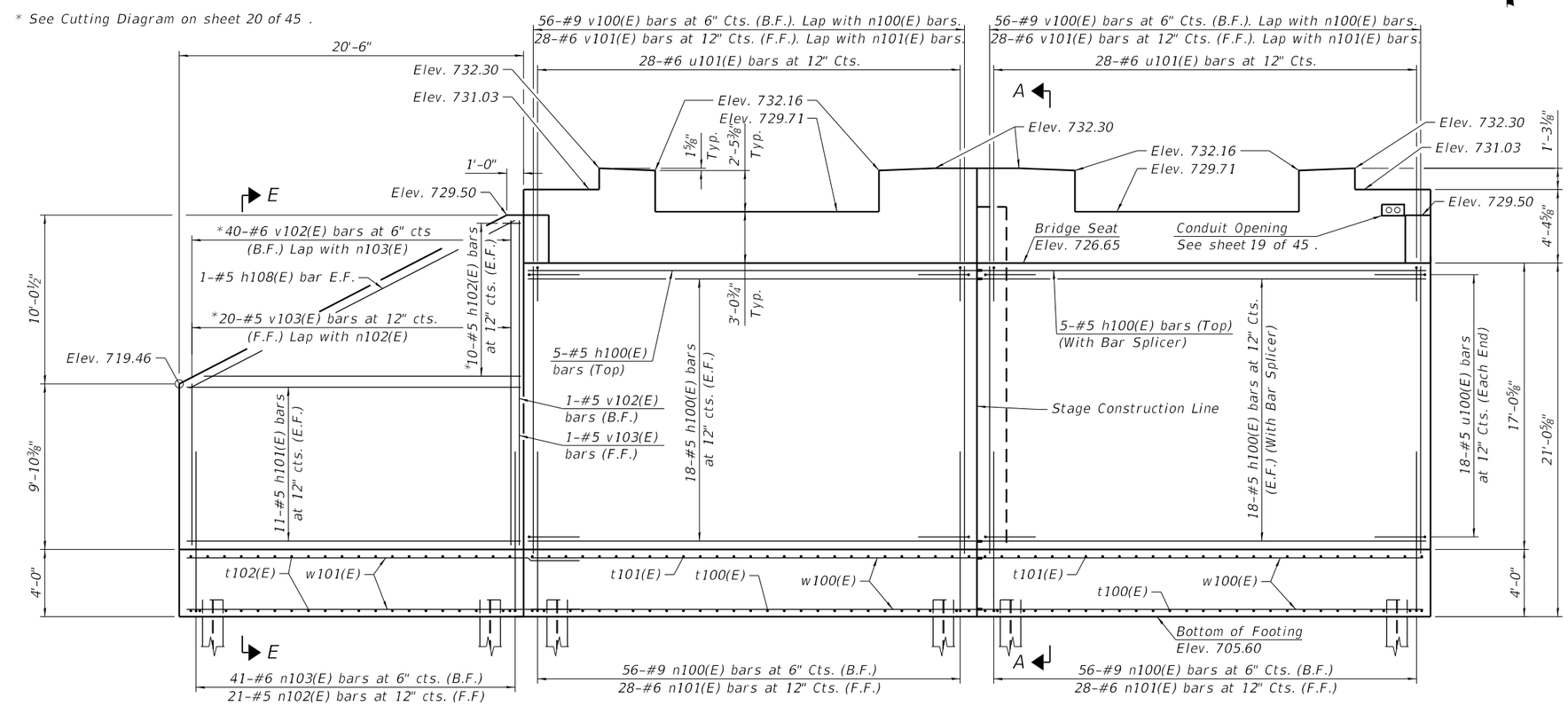


ELEVATION
(Looking North)

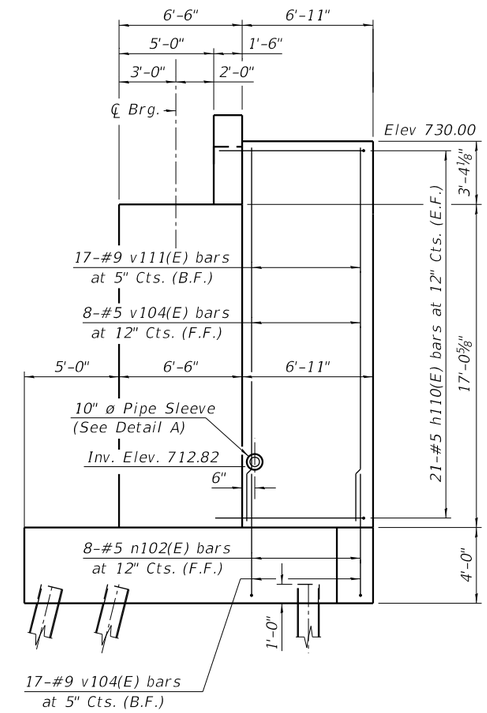


SECTION A-A

| | | | |
|---|---|---|---|
| USER NAME = brvanderwal | DESIGNED - TJA | REVISED - | |
| | CHECKED - JRM | REVISED - | |
| PLOT SCALE = 8.00 ' / in. | DRAWN - TJA | REVISED - | |
| PLOT DATE = 1/25/2025 | CHECKED - JRM | REVISED - | |

TRANSYSTEMS

STATE OF ILLINOIS
DEPARTMENT OF TRANSPORTATION

NORTH ABUTMENT PLAN & ELEVATION
STRUCTURE NO. 022-9948

SHEET 17 OF 45 SHEETS

| F.A.U. RTE. | SECTION | COUNTY | TOTAL SHEETS | SHEET NO. |
|---|---|---|---|---|
| 1509 | 06-00133-00-BR | DUPAGE | 426 | 174 |

CONTRACT NO. 61G79

ILLINOIS | FED. AID PROJECT

6:07:10 PM
FILE NAME: North Abutment Plan and Elevation

Notes:
For pile data, see sheet 3 of 45.
For drainage details, see sheet 39 of 45.

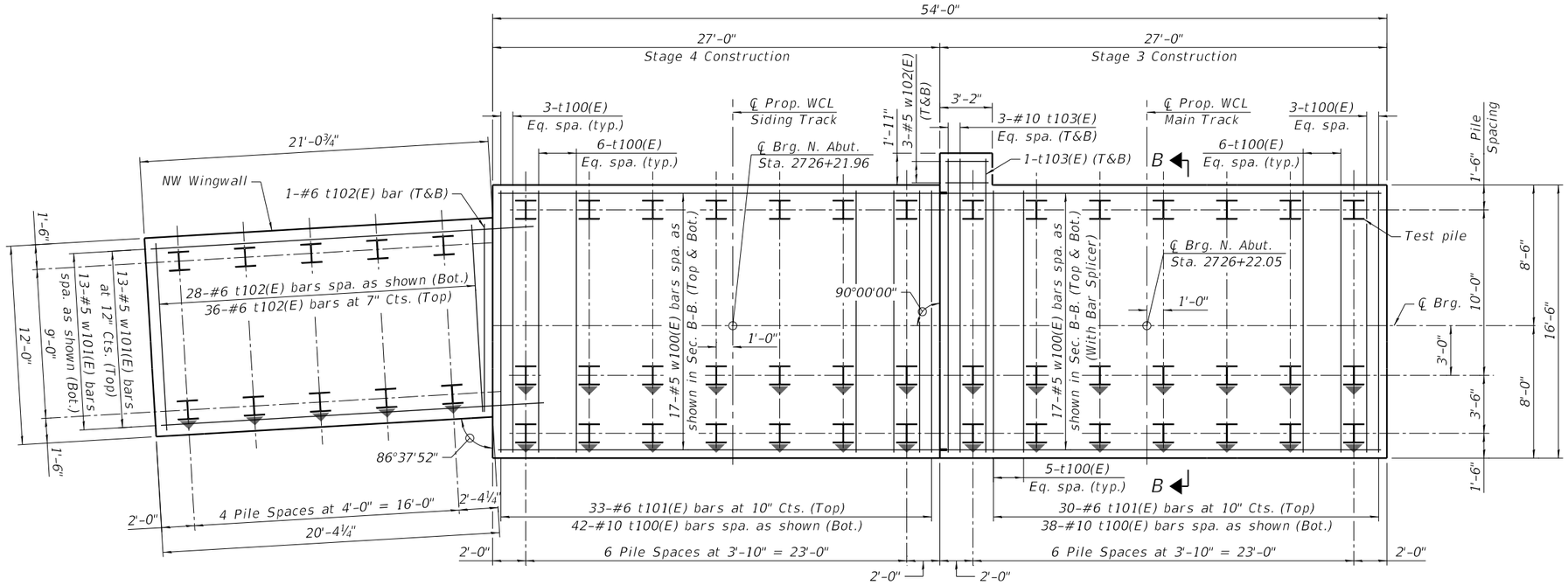


FOOTING PLAN

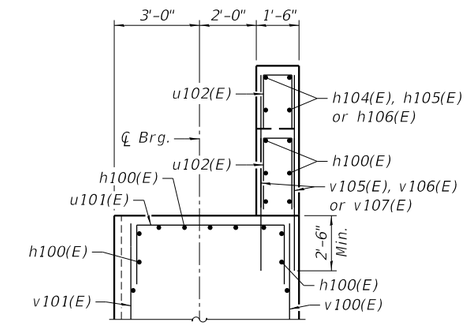


DETAIL B

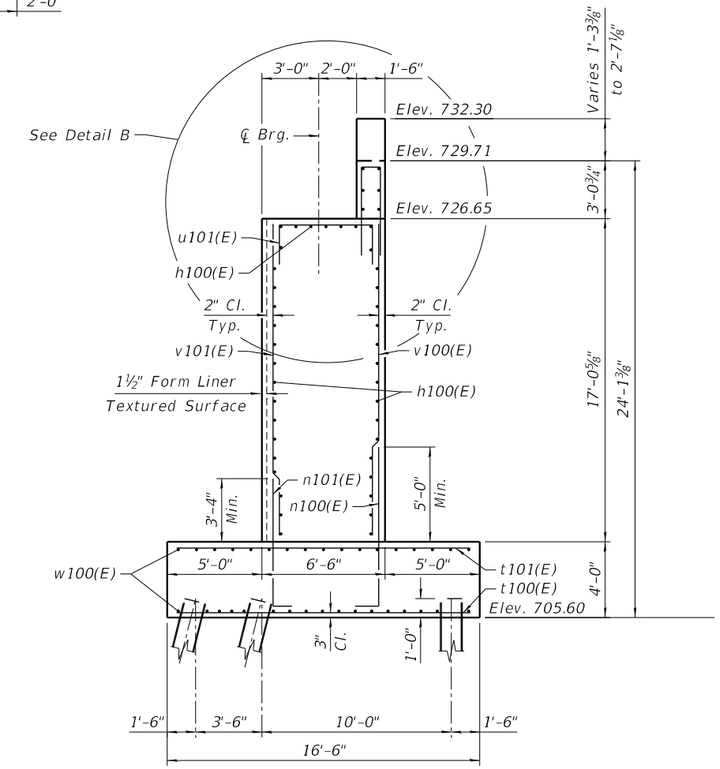


SECTION B-B

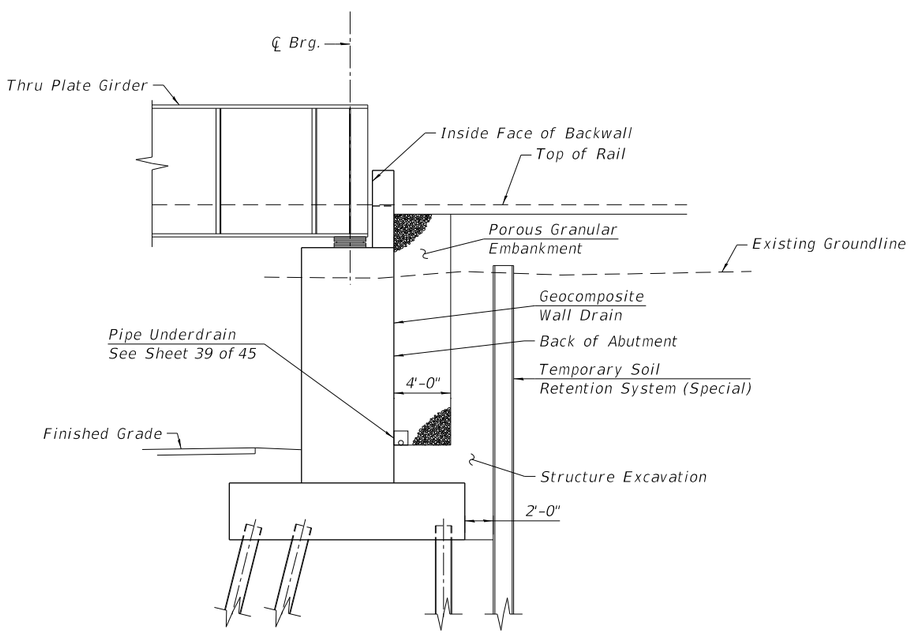


SECTION THRU ABUTMENT

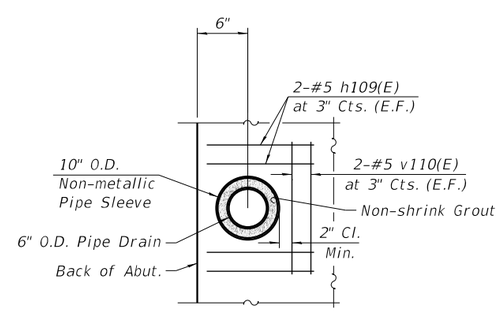


DETAIL A

(Cost of non-metallic sleeve and non-shrink grout included in Drainage System for Structures.)

| | | | | | | | | | |
|---|---|---|---|---|---|---|---|---|---|
| TRANSYSTEMS | USER NAME = brvanderwal | DESIGNED - TJA | REVISED - | STATE OF ILLINOIS DEPARTMENT OF TRANSPORTATION | NORTH ABUTMENT FOOTING PLAN STRUCTURE NO. 022-9948 | F.A.U. RTE. | SECTION | COUNTY | TOTAL SHEETS / SHEET NO. |
| | | CHECKED - JRM | REVISED - | | | 1509 | 06-00133-00-BR | DUPAGE | 426 / 175 |
| | PLOT SCALE = 8:0.0000 ':" / in. | DRAWN - TJA | REVISED - | | | | | CONTRACT NO. 61G79 | |
| | PLOT DATE = 1/25/2025 | CHECKED - JRM | REVISED - | | SHEET 18 OF 45 SHEETS | | ILLINOIS | FED. AID PROJECT | |

6:07:15 PM
FILE NAME: North Abutment Footing Plan

Notes:
All steel rail elements, base plates, and bolts shall be galvanized.
Fill backwall opening with non-shrink grout. Cost included with Concrete Structures (Special).

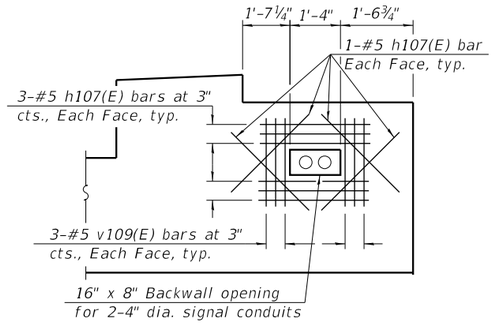


DETAIL C

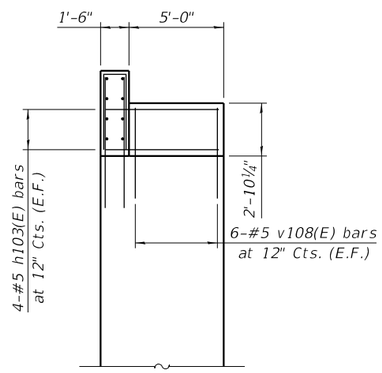


SECTION C-C

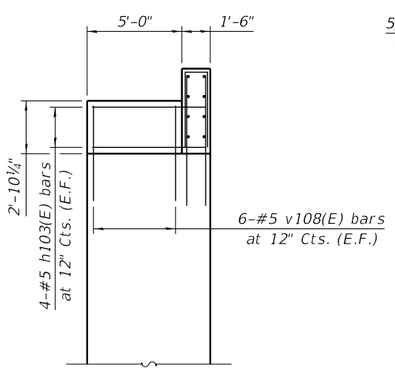


SECTION D-D

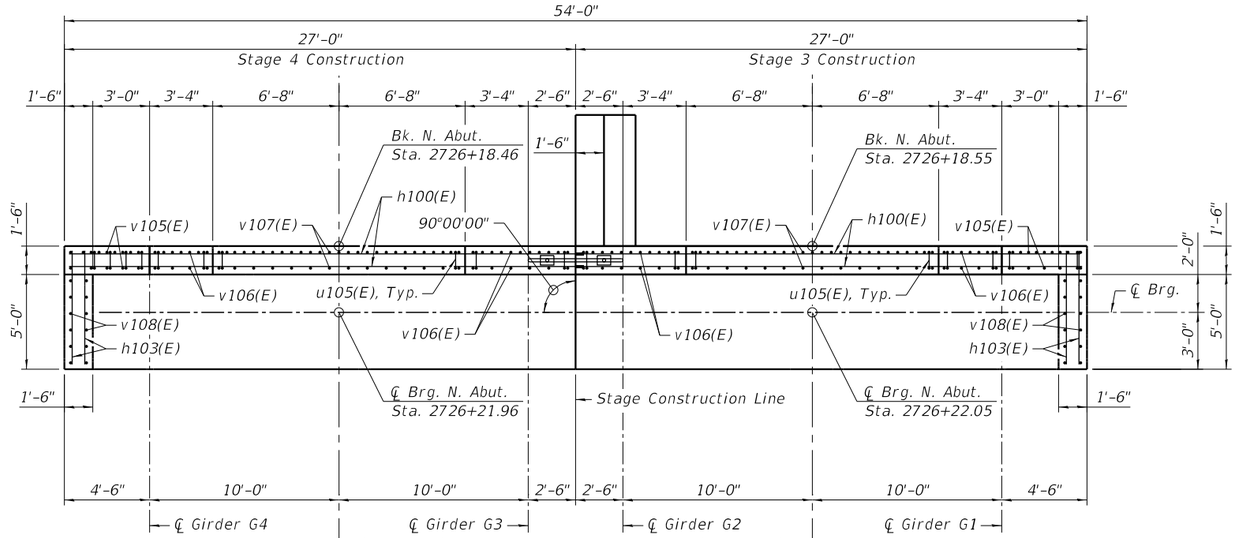


BACKWALL PLAN

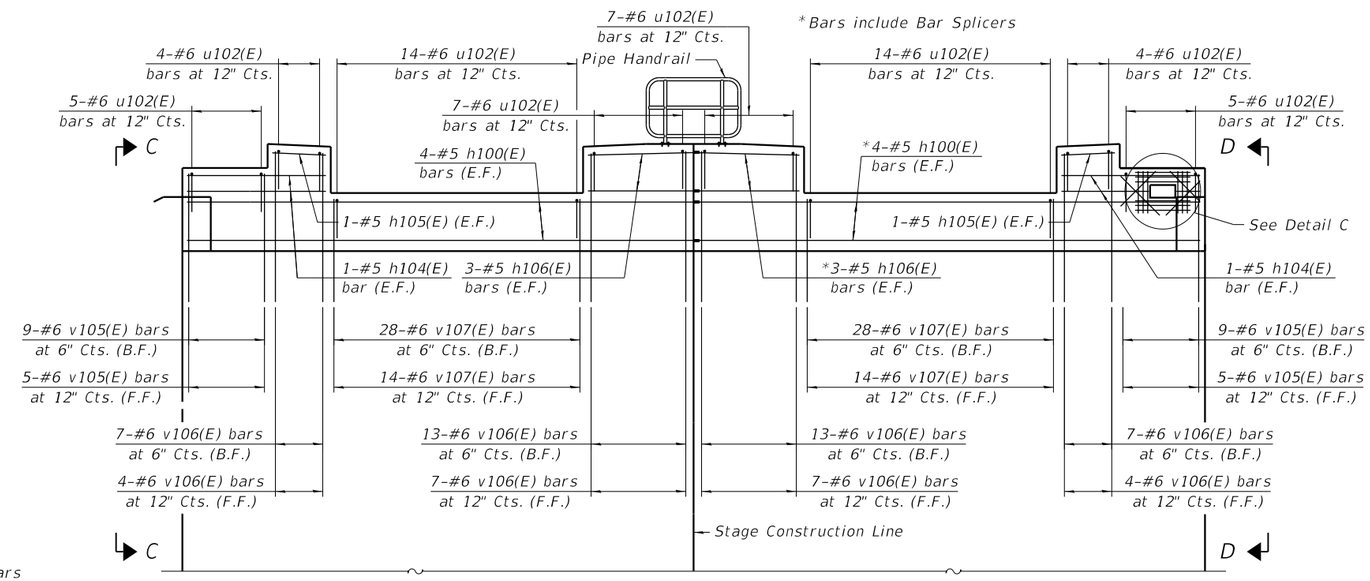


BACKWALL ELEVATION
(Looking North)

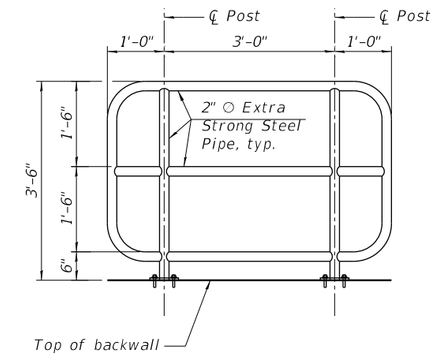


PIPE HANDRAIL DETAILS

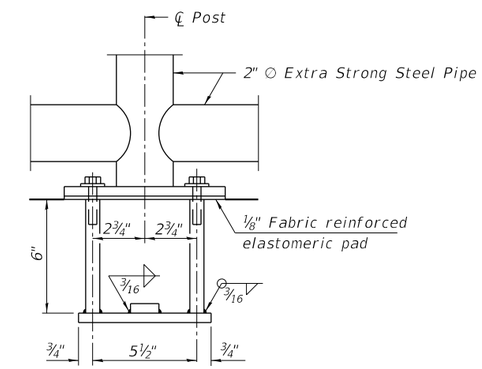


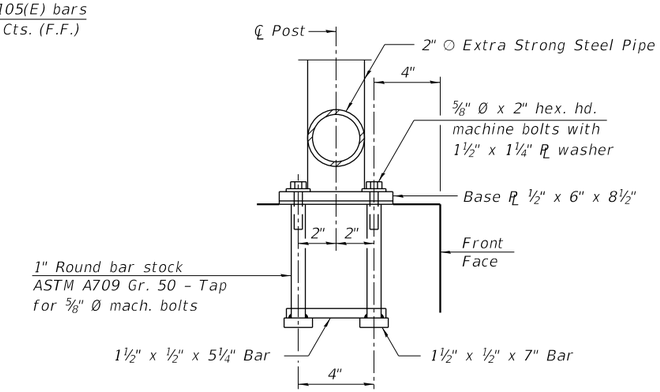


ANCHOR BOLT DETAILS

In lieu of the cast-in-place anchor device shown, the Contractor has the option of drilling and setting ⅝" Ø anchor rods according to Article 509.06 of the Standard Specifications. Embedment shall be according to the manufacturer's specifications.

6:07:19 PM
FILE NAME: North Abutment Details 1

TRANSYSTEMS

| | | | |
|---|---|---|---|
| USER NAME = brvanderwal | DESIGNED - TJA | REVISED - | |
| | CHECKED - JRM | REVISED - | |
| PLOT SCALE = 8:0.0000 ':' / in. | DRAWN - TJA | REVISED - | |
| PLOT DATE = 1/25/2025 | CHECKED - JRM | REVISED - | |

STATE OF ILLINOIS
DEPARTMENT OF TRANSPORTATION

NORTH ABUTMENT DETAILS 1
STRUCTURE NO. 022-9948

SHEET 19 OF 45 SHEETS

| F.A.U. RTE. | SECTION | COUNTY | TOTAL SHEETS | SHEET NO. |
|---|---|---|---|---|
| 1509 | 06-00133-00-BR | DUPAGE | 426 | 176 |
| | | CONTRACT NO. 61G79 | | |
| | | ILLINOIS | FED. AID PROJECT | |

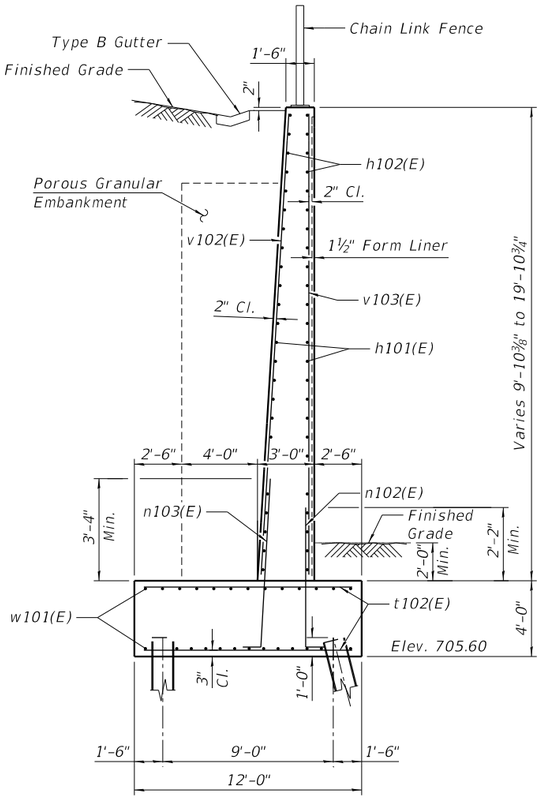


## SECTION E-E

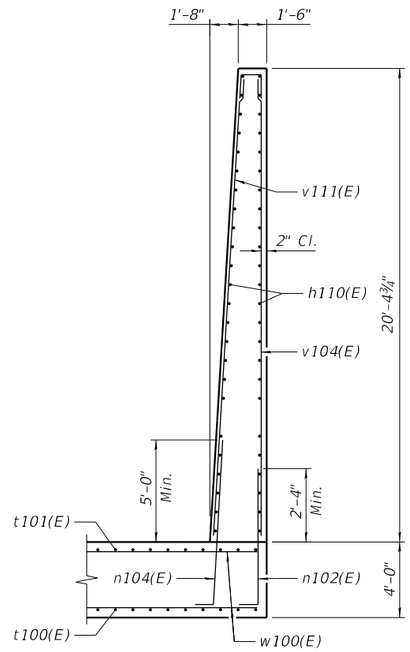


## SECTION F-F

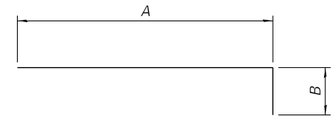


## BARS n100(E), n101(E), AND n102(E)

| Bar | A | B |
|---|---|---|
| n100(E) | 8'-9" | 1'-7" |
| n101(E) | 7'-1" | 1'-0" |
| n102(E) | 6'-1" | 10" |

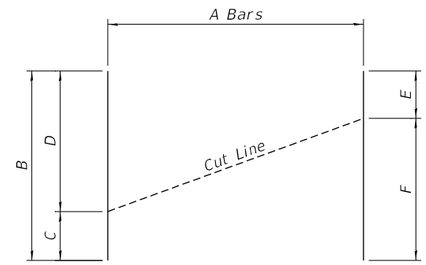


## FIELD CUTTING DIAGRAM

Order bars in table below full length. Cut as shown and use remainder of bars in opposite face (h bars) or opposite end (v bars).

| Bar | A | B | C | D | E | F |
|---|---|---|---|---|---|---|
| h102(E) | 10 | 19'-10" | 1'-1" | 18'-9" | 1'-1" | 18'-9" |
| v102(E) | 20 | 29'-0" | 9'-6" | 19'-6" | 14'-3" | 14'-9" |
| v103(E) | 10 | 29'-0" | 9'-6" | 19'-6" | 14'-3" | 14'-9" |

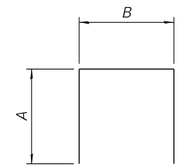


## BARS u100(E), u101(E), AND u102(E)

| Bar | A | B |
|---|---|---|
| u100(E) | 2'-4" | 6'-0" |
| u101(E) | 2'-9" | 6'-0" |
| u102(E) | 2'-9" | 1'-2" |

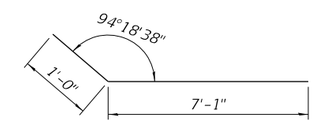


## BAR n103(E)

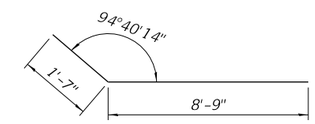


## BAR n104(E)

## MINIMUM BAR LAP

#5 bar = 2'-2"
#6 bar = 3'-2"
#9 bar = 4'-9"

## BILL OF MATERIAL

| Bar | No. | Size | Length | Shape |
|---|---|---|---|---|
| h100(E) | 98 | #5 | 26'-8" | |
| h101(E) | 22 | #5 | 20'-2" | |
| h102(E) | 10 | #5 | 19'-10" | |
| h103(E) | 16 | #5 | 6'-2" | |
| h104(E) | 8 | #5 | 7'-6" | |
| h105(E) | 4 | #5 | 3'-0" | |
| h106(E) | 12 | #5 | 5'-6" | |
| h107(E) | 20 | #5 | 2'-11" | |
| h108(E) | 2 | #5 | 21'-8" | |
| h109(E) | 8 | #5 | 1'-5" | |
| h110(E) | 42 | #5 | 8'-1" | |
| | | | | |
| n100(E) | 112 | #9 | 10'-4" | |
| n101(E) | 56 | #6 | 8'-1" | |
| n102(E) | 29 | #5 | 6'-11" | |
| n103(E) | 41 | #6 | 8'-1" | |
| n104(E) | 17 | #9 | 10'-4" | |
| | | | | |
| t100(E) | 80 | #10 | 16'-2" | |
| t101(E) | 63 | #6 | 16'-2" | |
| t102(E) | 68 | #6 | 11'-8" | |
| t103(E) | 8 | #6 | 18'-1" | |
| | | | | |
| u100(E) | 36 | #5 | 10'-8" | |
| u101(E) | 56 | #6 | 11'-6" | |
| u102(E) | 60 | #6 | 6'-8" | |
| | | | | |
| v100(E) | 112 | #9 | 16'-9" | |
| v101(E) | 56 | #6 | 16'-9" | |
| v102(E) | 21 | #6 | 29'-0" | |
| v103(E) | 11 | #5 | 29'-0" | |
| v104(E) | 8 | #5 | 20'-1" | |
| v105(E) | 28 | #6 | 6'-8" | |
| v106(E) | 62 | #6 | 7'-8" | |
| v107(E) | 84 | #6 | 5'-4" | |
| v108(E) | 24 | #6 | 3'-4" | |
| v109(E) | 12 | #5 | 2'-4" | |
| v110(E) | 4 | #5 | 1'-9" | |
| v111(E) | 17 | #9 | 20'-1" | |
| | | | | |
| w100(E) | 68 | #5 | 26'-8" | |
| w101(E) | 26 | #5 | 22'-10" | |
| | | | | |
| Porous Granular Embankment | | | Cu. Yd. | 173 |
| Structure Excavation | | | Cu. Yd. | 1,550 |
| Form Liner Textured Surface | | | Sq. Ft. | 1,216 |
| Reinforcement Bars, Epoxy Coated | | | Pound | 35,210 |
| Bar Splicers | | | Each | 89 |
| Pipe Handrail | | | Foot | 5 |
| Furnishing Steel Piles, HP14x89 | | | Foot | 4,536 |
| Driving Piles | | | Foot | 4,536 |
| Test Pile Steel HP14x89 | | | Each | 1 |
| Pile Shoes | | | Each | 52 |
| Geocomposite Wall Drain | | | Sq. Yd. | 137 |
| Concrete Gutter, Type B | | | Foot | 21 |
| Concrete Structures (Special) | | | Cu. Yd. | 443.2 |
| Chain Link Fence, 4' Attached to Structure | | | Foot | 21 |
| Anti-Graffiti Protection System | | | Sq. Ft. | 1,605 |

Notes:
For drainage details, see sheet 39 of 45.

## SECTION E-E

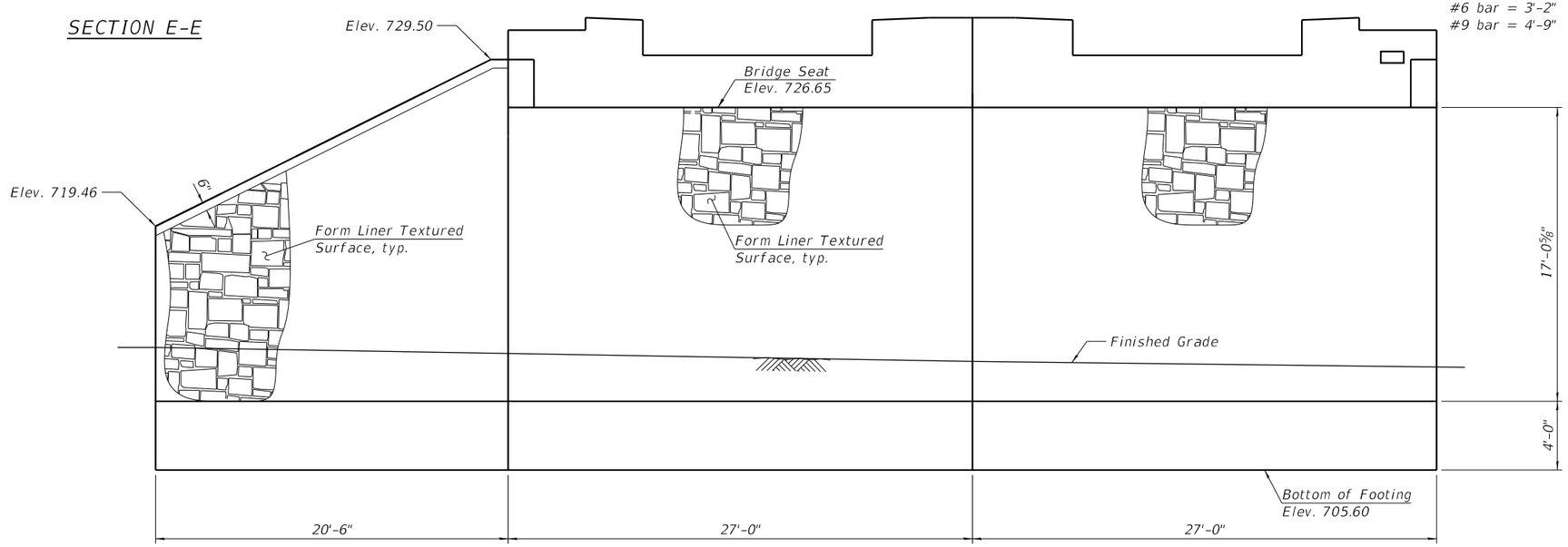


## NORTH ABUTMENT ARCHITECTURAL DETAILS

(Looking North at Front Face)

6:07:24 PM
FILE NAME: North Abutment Details 2

TRANSYSTEMS

| | | | |
|---|---|---|---|
| USER NAME = brvanderwal | DESIGNED - TJA | REVISED - | |
| | CHECKED - JRM | REVISED - | |
| PLOT SCALE = 8:0.0000 ':" / in. | DRAWN - MDG | REVISED - | |
| PLOT DATE = 1/25/2025 | CHECKED - JRM | REVISED - | |

STATE OF ILLINOIS
DEPARTMENT OF TRANSPORTATION

NORTH ABUTMENT DETAILS 2
STRUCTURE NO. 022-9948

SHEET 20 OF 45 SHEETS

| F.A.U. RTE. | SECTION | COUNTY | TOTAL SHEETS | SHEET NO. |
|---|---|---|---|---|
| 1509 | 06-00133-00-BR | DUPAGE | 426 | 177 |

CONTRACT NO. 61G79

ILLINOIS FED. AID PROJECT

Notes:
For Detail A, see sheet 22 of 45.
For Sections E-E and F-F, see sheet 24 of 45.
Space h200(E) and u201(E) bars to miss anchor bolts.

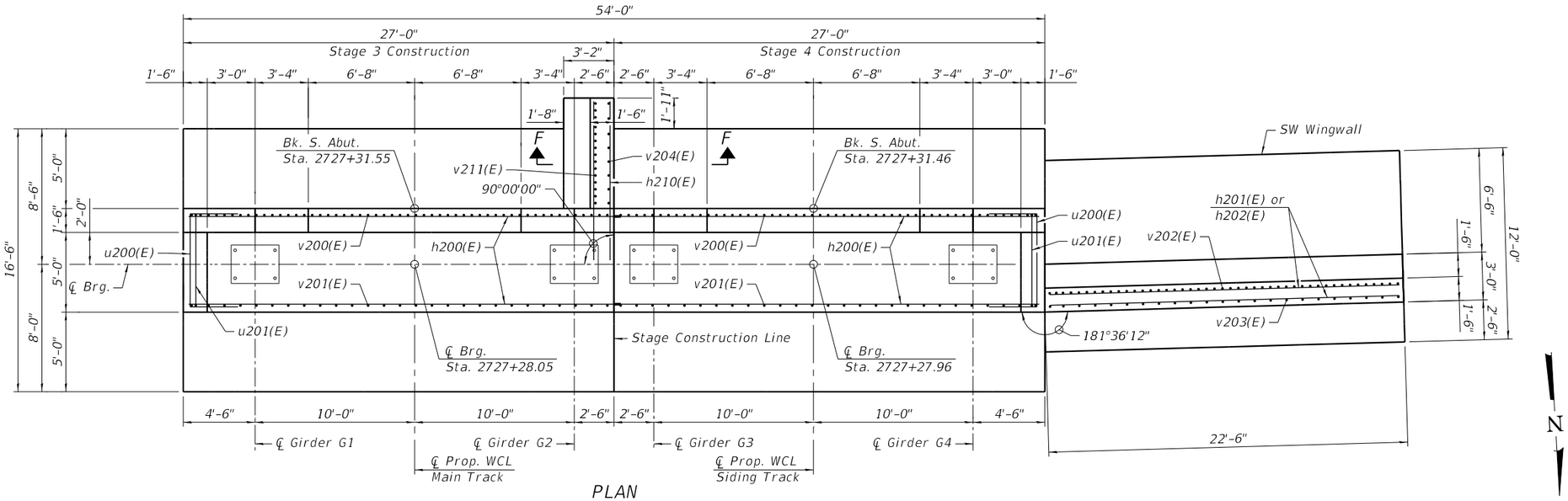


PLAN

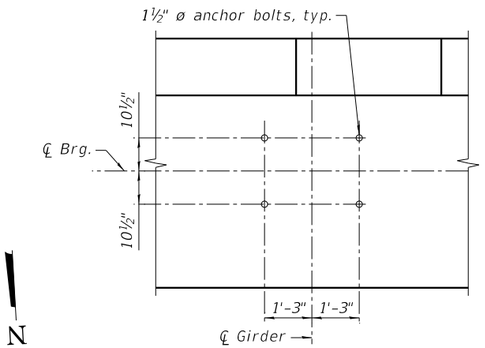


ANCHOR BOLT LAYOUT
(Typ. at Bearing Location - 4 Locations)

* See Cutting Diagram on sheet 24 of 45.

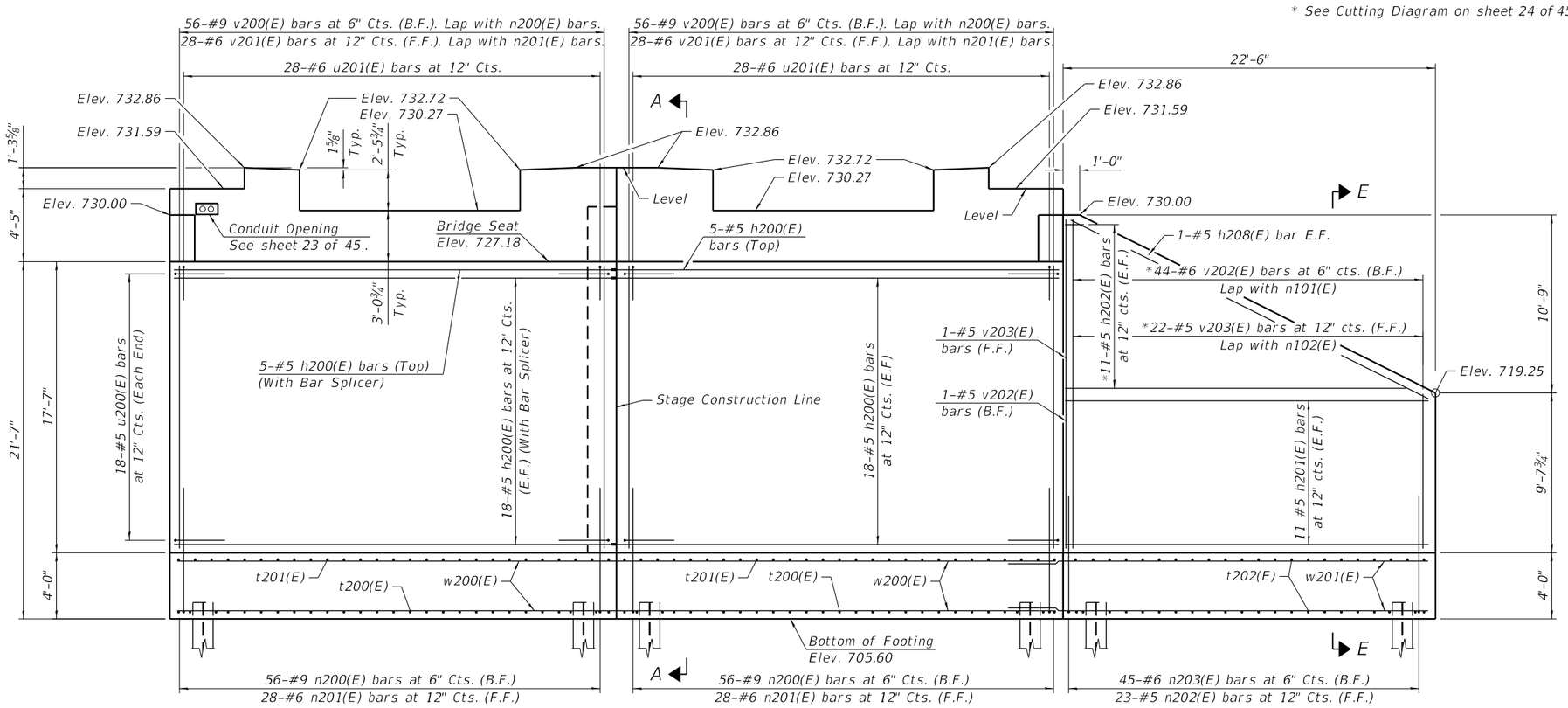


ELEVATION
(Looking South)

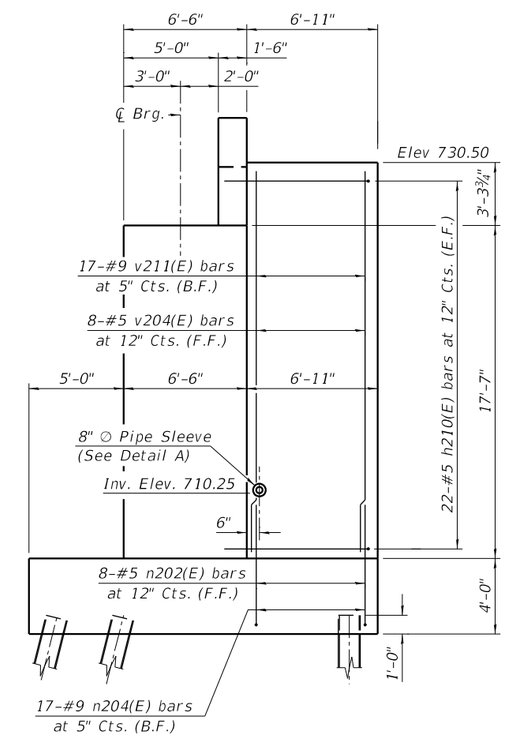


SECTION A-A

| | | | | | | | | | |
|---|---|---|---|---|---|---|---|---|---|
| TRANSYSTEMS | USER NAME = brvanderwal | DESIGNED - TJA | REVISED - | STATE OF ILLINOIS DEPARTMENT OF TRANSPORTATION | SOUTH ABUTMENT PLAN & ELEVATION STRUCTURE NO. 022-9948 | F.A.U. RTE. | SECTION | COUNTY | TOTAL SHEETS / SHEET NO. |
| | | CHECKED - JRM | REVISED - | | | 1509 | 06-00133-00-BR | DUPAGE | 426 / 178 |
| | PLOT SCALE = 8.00 ' / in. | DRAWN - TJA | REVISED - | | | | | CONTRACT NO. 61G79 | |
| | PLOT DATE = 1/25/2025 | CHECKED - JRM | REVISED - | | SHEET 21 OF 45 SHEETS | | | ILLINOIS FED. AID PROJECT | |

6:07:29 PM
FILE NAME: South Abutment Plan and Elevation

Notes:
For pile data, see sheet 3 of 45.
For drainage details, see sheet 39 of 45.

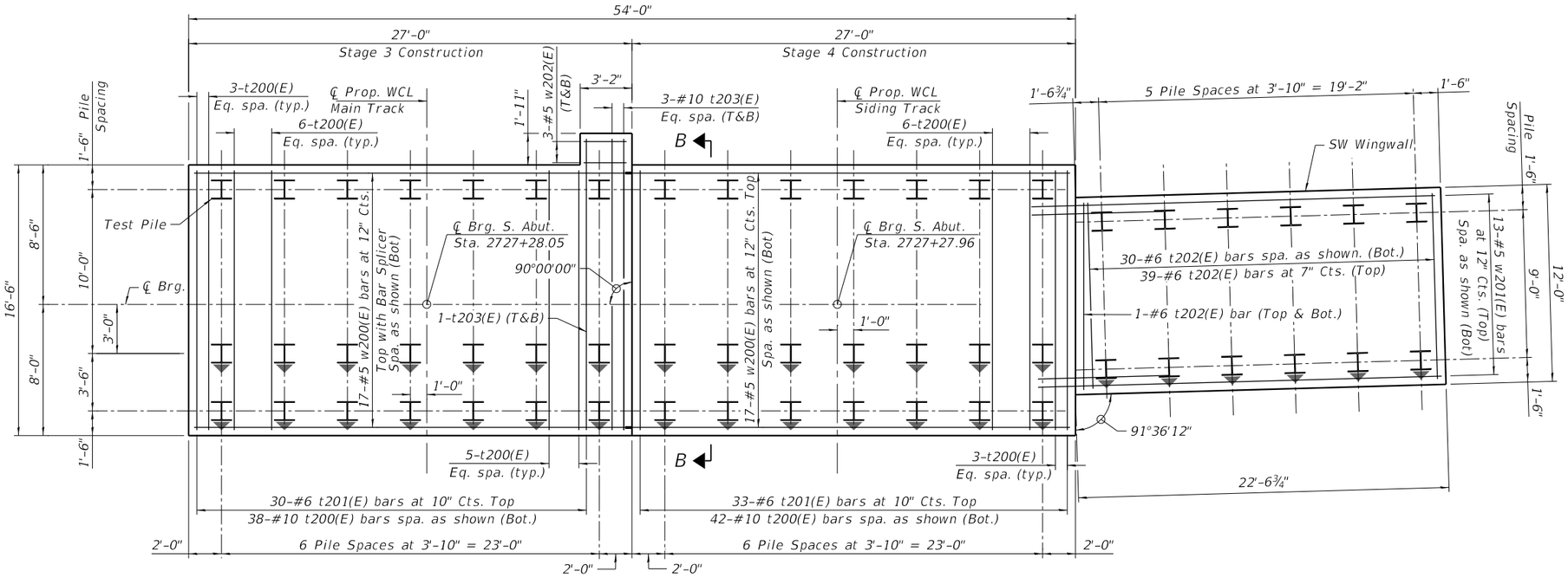


FOOTING PLAN

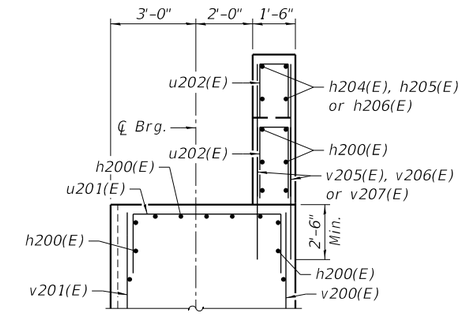


DETAIL B

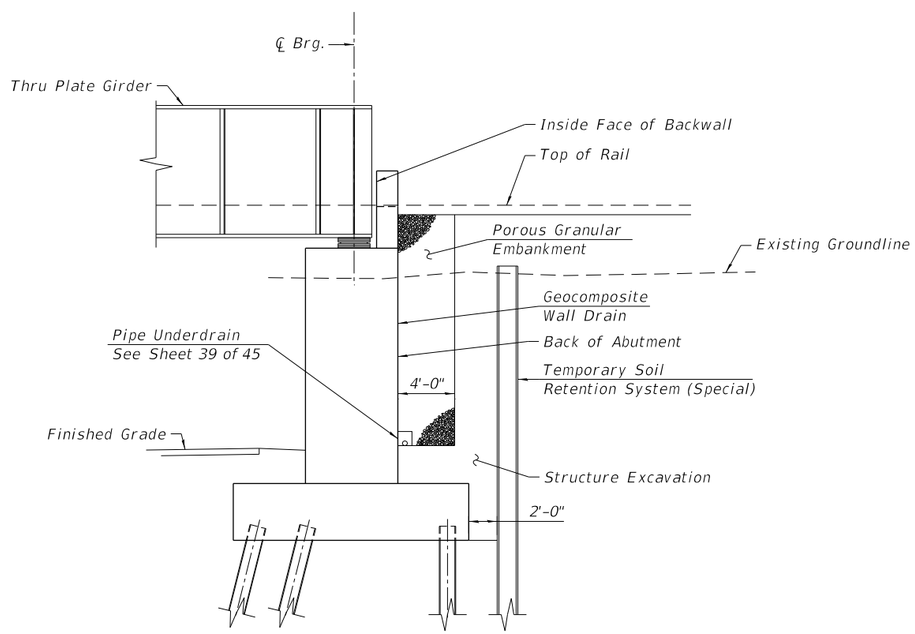


SECTION THRU ABUTMENT

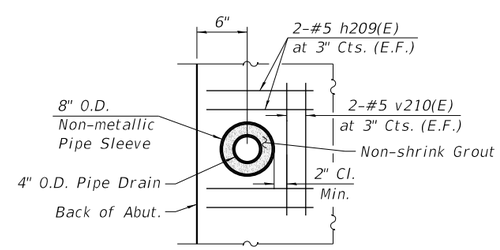


DETAIL A

(Cost of non-metallic sleeve and non-shrink grout included in Pipe Underdrains for Structures, 4")

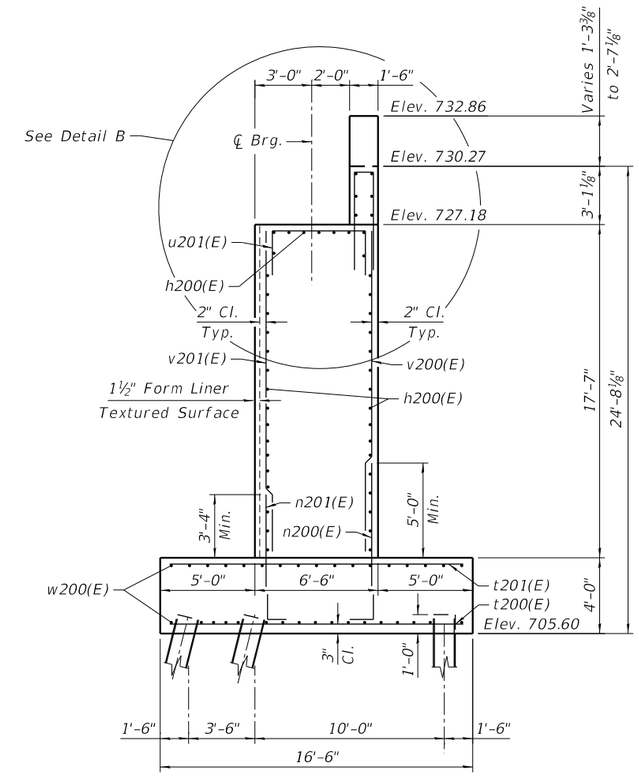


SECTION B-B

| | | | | | |
|---|---|---|---|---|---|
| TRANSYSTEMS | USER NAME = brvanderwal | DESIGNED - TJA | REVISED - | STATE OF ILLINOIS DEPARTMENT OF TRANSPORTATION | SOUTH ABUTMENT FOOTING PLAN STRUCTURE NO. 022-9948 |
| | | CHECKED - JRM | REVISED - | | |
| | PLOT SCALE = 8:0.0000 ':" / in. | DRAWN - TJA | REVISED - | | |
| | PLOT DATE = 1/25/2025 | CHECKED - JRM | REVISED - | | SHEET 22 OF 45 SHEETS |

| F.A.U. RTE. | SECTION | COUNTY | TOTAL SHEETS | SHEET NO. |
|---|---|---|---|---|
| 1509 | 06-00133-00-BR | DUPAGE | 426 | 179 |
| | | CONTRACT NO. 61G79 | | |
| | | ILLINOIS | FED. AID PROJECT | |

6:07:34 PM
FILE NAME: South Abutment Footing Plan

Notes:
All steel rail elements, base plates, and bolts shall be galvanized.
Fill backwall opening with non-shrink grout. Cost included with Concrete Structures (Special).

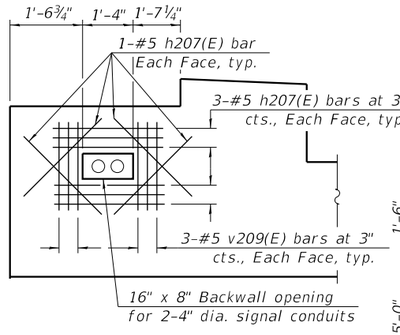


DETAIL C

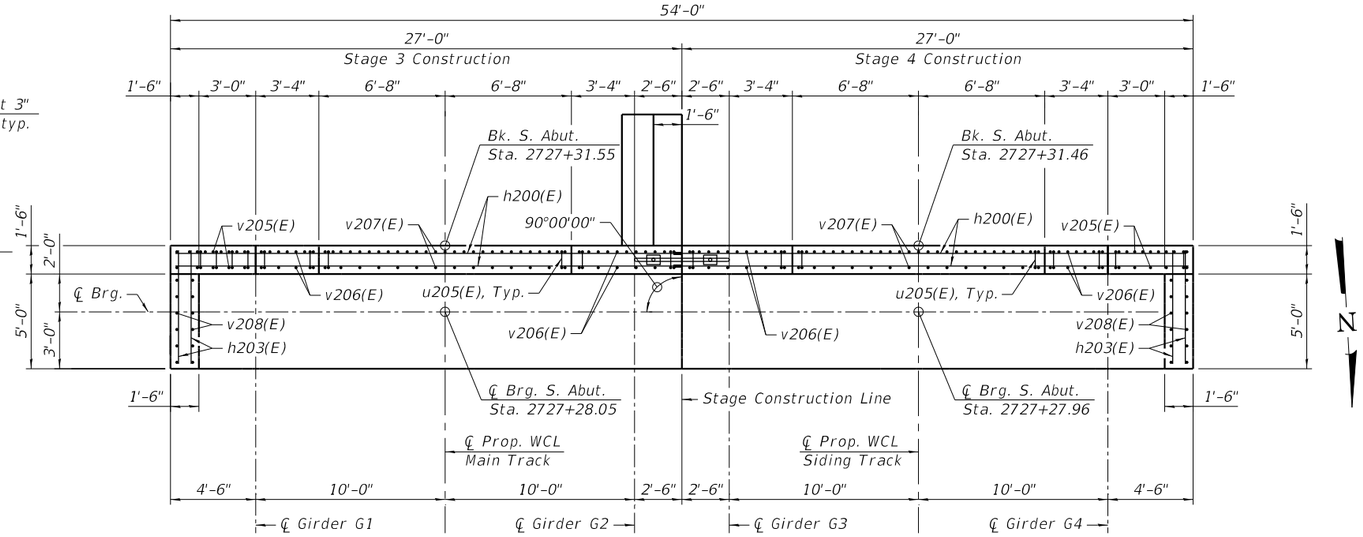


BACKWALL PLAN

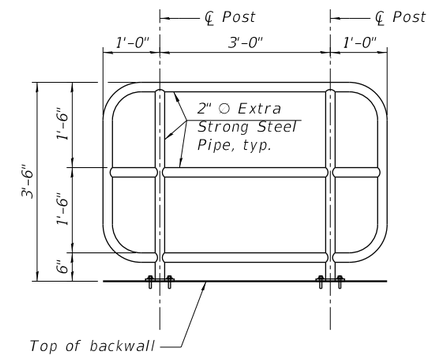


PIPE HANDRAIL DETAILS

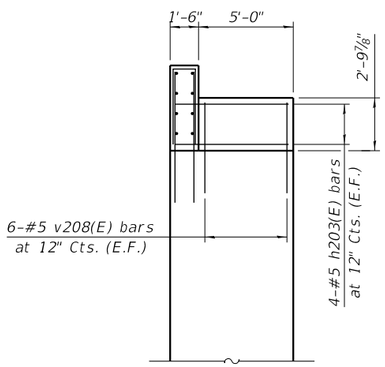


SECTION C-C

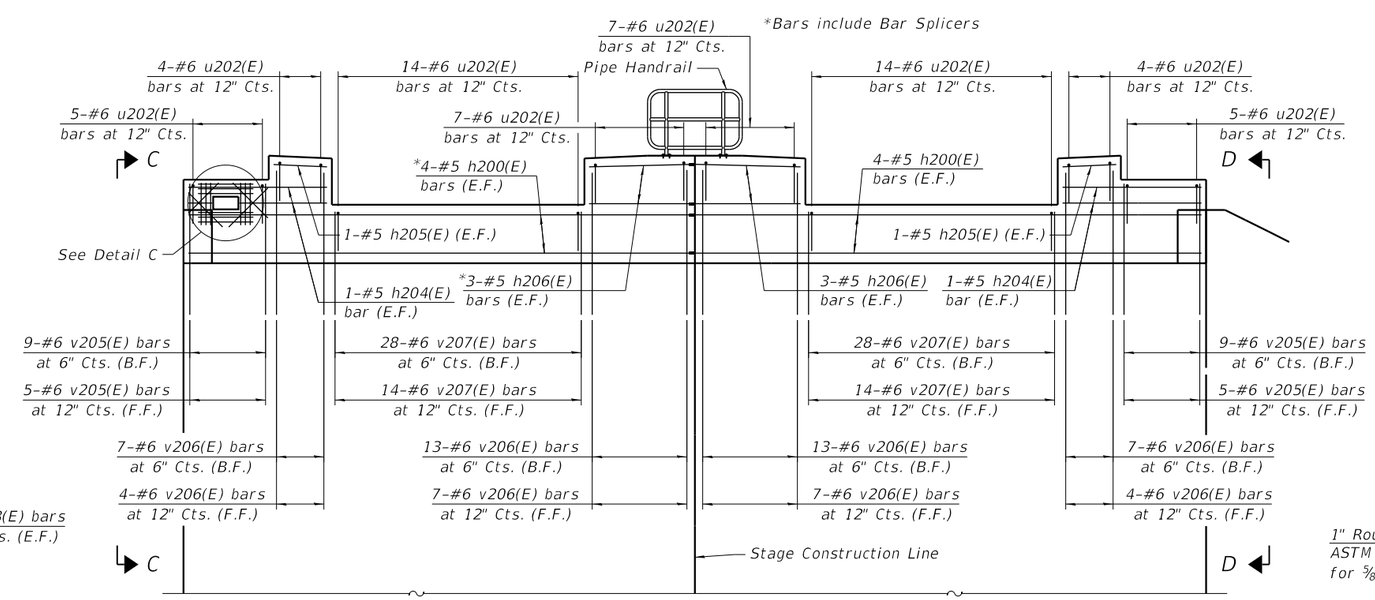


BACKWALL ELEVATION
(Looking South)

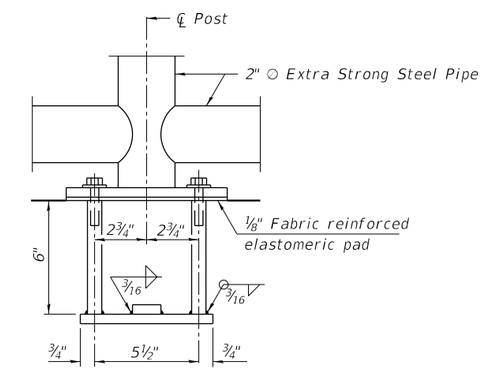


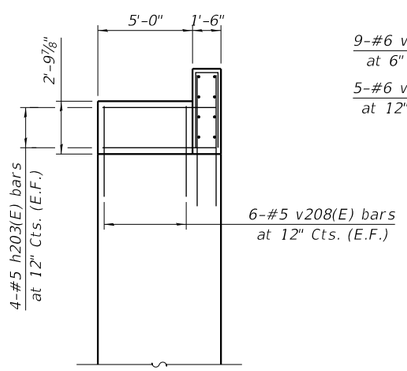


SECTION D-D

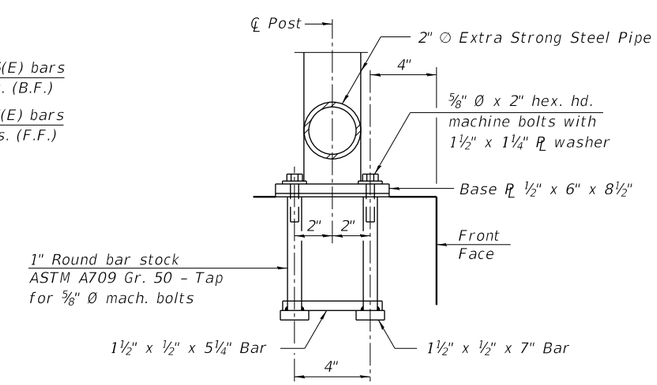


ANCHOR BOLT DETAILS

In lieu of the cast-in-place anchor device shown, the Contractor has the option of drilling and setting ⅝" Ø anchor rods according to Article 509.06 of the Standard Specifications. Embedment shall be according to the manufacturer's specifications.

6:07:38 PM
FILE NAME: South Abutment Details 1

TRANSYSTEMS

| | | | |
|---|---|---|---|
| USER NAME = brvanderwal | DESIGNED - TJA | REVISED - | |
| | CHECKED - JRM | REVISED - | |
| PLOT SCALE = 8:0.0000 ':" / in. | DRAWN - TJA | REVISED - | |
| PLOT DATE = 1/25/2025 | CHECKED - JRM | REVISED - | |

STATE OF ILLINOIS
DEPARTMENT OF TRANSPORTATION

SOUTH ABUTMENT DETAILS 1
STRUCTURE NO. 022-9948

SHEET 23 OF 45 SHEETS

| F.A.U. RTE. | SECTION | COUNTY | TOTAL SHEETS | SHEET NO. |
|---|---|---|---|---|
| 1509 | 06-00133-00-BR | DUPAGE | 426 | 180 |
| | | CONTRACT NO. 61G79 | | |
| | | ILLINOIS | FED. AID PROJECT | |

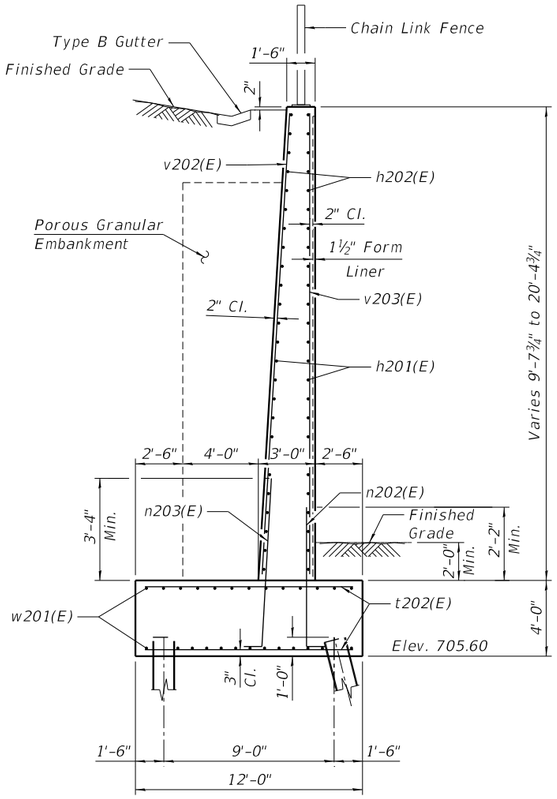


SECTION E-E

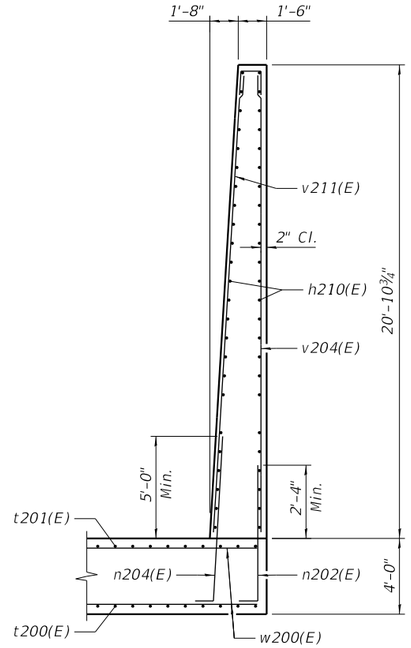


SECTION F-F

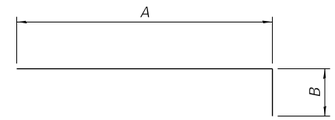


BARS n200(E), n201(E), AND n202(E)

| Bar | A | B |
|---|---|---|
| n200(E) | 8'-9" | 1'-7" |
| n201(E) | 7'-1" | 1'-0" |
| n202(E) | 6'-1" | 10" |

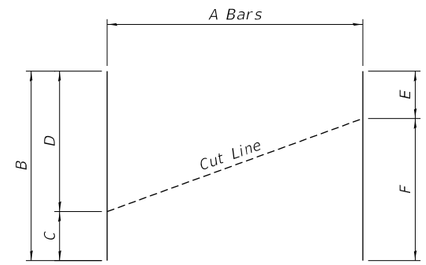


FIELD CUTTING DIAGRAM

Order bars in table below full length. Cut as shown and use remainder of bars in opposite face (h bars) or opposite end (v bars).

| Bar | A | B | C | D | E | F |
|---|---|---|---|---|---|---|
| h202(E) | 11 | 21'-7" | 1'-1" | 20'-6" | 1'-1" | 20'-6" |
| v202(E) | 22 | 29'-5" | 9'-4" | 20'-1" | 14'-7" | 14'-10" |
| v203(E) | 11 | 29'-5" | 9'-4" | 20'-1" | 14'-7" | 14'-10" |

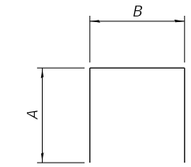


BARS u200(E), u201(E), AND u202(E)

| Bar | A | B |
|---|---|---|
| u200(E) | 2'-4" | 6'-0" |
| u201(E) | 2'-9" | 6'-0" |
| u202(E) | 2'-9" | 1'-2" |

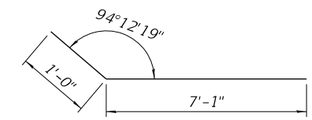


BAR n203(E)

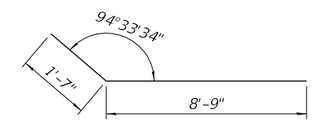


BAR n204(E)

MINIMUM BAR LAP

#5 bar = 2'-2"
#6 bar = 3'-2"
#9 bar = 4'-9"

BILL OF MATERIAL

| Bar | No. | Size | Length | Shape |
|---|---|---|---|---|
| h200(E) | 98 | #5 | 26'-8" | |
| h201(E) | 22 | #5 | 22'-2" | |
| h202(E) | 11 | #5 | 21'-7" | |
| h203(E) | 16 | #5 | 6'-2" | |
| h204(E) | 8 | #5 | 7'-6" | |
| h205(E) | 4 | #5 | 3'-0" | |
| h206(E) | 12 | #5 | 5'-6" | |
| h207(E) | 20 | #5 | 2'-11" | |
| h208(E) | 2 | #5 | 23'-7" | |
| h209(E) | 8 | #5 | 1'-5" | |
| h210(E) | 44 | #5 | 8'-1" | |
| | | | | |
| n200(E) | 112 | #9 | 10'-4" | |
| n201(E) | 56 | #6 | 8'-1" | |
| n202(E) | 31 | #5 | 6'-11" | |
| n203(E) | 45 | #6 | 8'-1" | |
| n204(E) | 17 | #9 | 10'-4" | |
| | | | | |
| t200(E) | 80 | #10 | 16'-2" | |
| t201(E) | 63 | #6 | 16'-2" | |
| t202(E) | 71 | #6 | 11'-8" | |
| t203(E) | 8 | #6 | 18'-1" | |
| | | | | |
| u200(E) | 36 | #5 | 10'-8" | |
| u201(E) | 56 | #6 | 11'-6" | |
| u202(E) | 60 | #6 | 6'-8" | |
| | | | | |
| v200(E) | 112 | #9 | 17'-3" | |
| v201(E) | 56 | #6 | 17'-3" | |
| v202(E) | 23 | #6 | 29'-5" | |
| v203(E) | 12 | #5 | 29'-5" | |
| v204(E) | 8 | #5 | 20'-7" | |
| v205(E) | 28 | #6 | 6'-9" | |
| v206(E) | 62 | #6 | 7'-9" | |
| v207(E) | 84 | #6 | 5'-5" | |
| v208(E) | 24 | #6 | 3'-4" | |
| v209(E) | 12 | #5 | 2'-4" | |
| v210(E) | 4 | #5 | 1'-9" | |
| v211(E) | 17 | #9 | 20'-7" | |
| | | | | |
| w200(E) | 68 | #5 | 26'-8" | |
| w201(E) | 26 | #5 | 24'-4" | |
| | | | | |
| Porous Granular Embankment | | | Cu. Yd. | 213 |
| Structure Excavation | | | Cu. Yd. | 1,298 |
| Form Liner Textured Surface | | | Sq. Ft. | 1,277 |
| Reinforcement Bars, Epoxy Coated | | | Pound | 35,900 |
| Bar Splicers | | | Each | 89 |
| Pipe Handrail | | | Foot | 5 |
| Furnishing Steel Piles, HP14x89 | | | Foot | 4,554 |
| Driving Piles | | | Foot | 4,554 |
| Test Pile Steel HP14x89 | | | Each | 1 |
| Pile Shoes | | | Each | 54 |
| Geocomposite Wall Drain | | | Sq. Yd. | 167 |
| Concrete Gutter, Type B | | | Foot | 23 |
| Concrete Structures (Special) | | | Cu. Yd. | 457.3 |
| Chain Link Fence, 4' Attached to Structure | | | Foot | 23 |
| Anti-Graffiti Protection System | | | Sq. Ft. | 1,610 |

Notes:
For drainage details, see sheet 39 of 45.

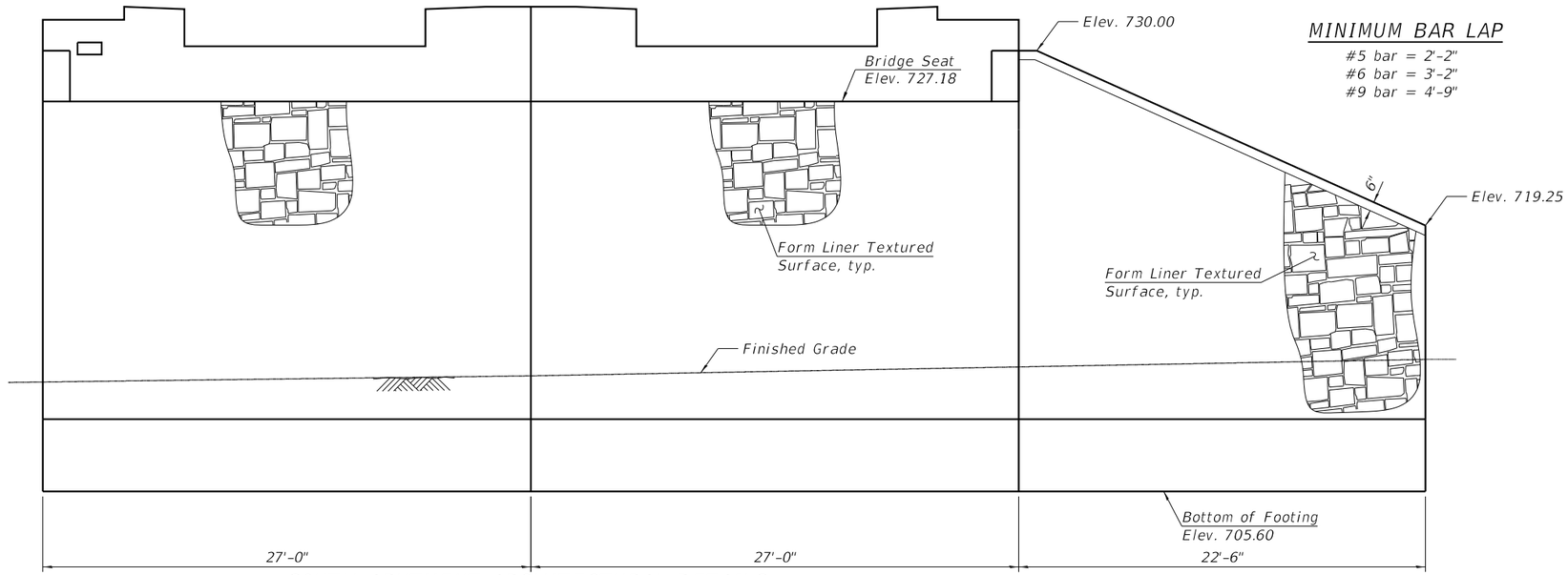


SOUTH ABUTMENT ARCHITECTURAL DETAILS

(Looking South at Front Face)

6:07:42 PM
FILE NAME: South Abutment Details 2

TRANSYSTEMS

| | | | |
|---|---|---|---|
| USER NAME = brvanderwal | DESIGNED - TJA | REVISED - | |
| | CHECKED - JRM | REVISED - | |
| PLOT SCALE = 8:0.0000 ':" / in. | DRAWN - MDG | REVISED - | |
| PLOT DATE = 1/25/2025 | CHECKED - JRM | REVISED - | |

STATE OF ILLINOIS
DEPARTMENT OF TRANSPORTATION

SOUTH ABUTMENT DETAILS 2
STRUCTURE NO. 022-9948

SHEET 24 OF 45 SHEETS

| F.A.U. RTE. | SECTION | COUNTY | TOTAL SHEETS | SHEET NO. |
|---|---|---|---|---|
| 1509 | 06-00133-00-BR | DUPAGE | 426 | 181 |
| | | CONTRACT NO. 61G79 | | |
| | ILLINOIS | FED. AID PROJECT | | |

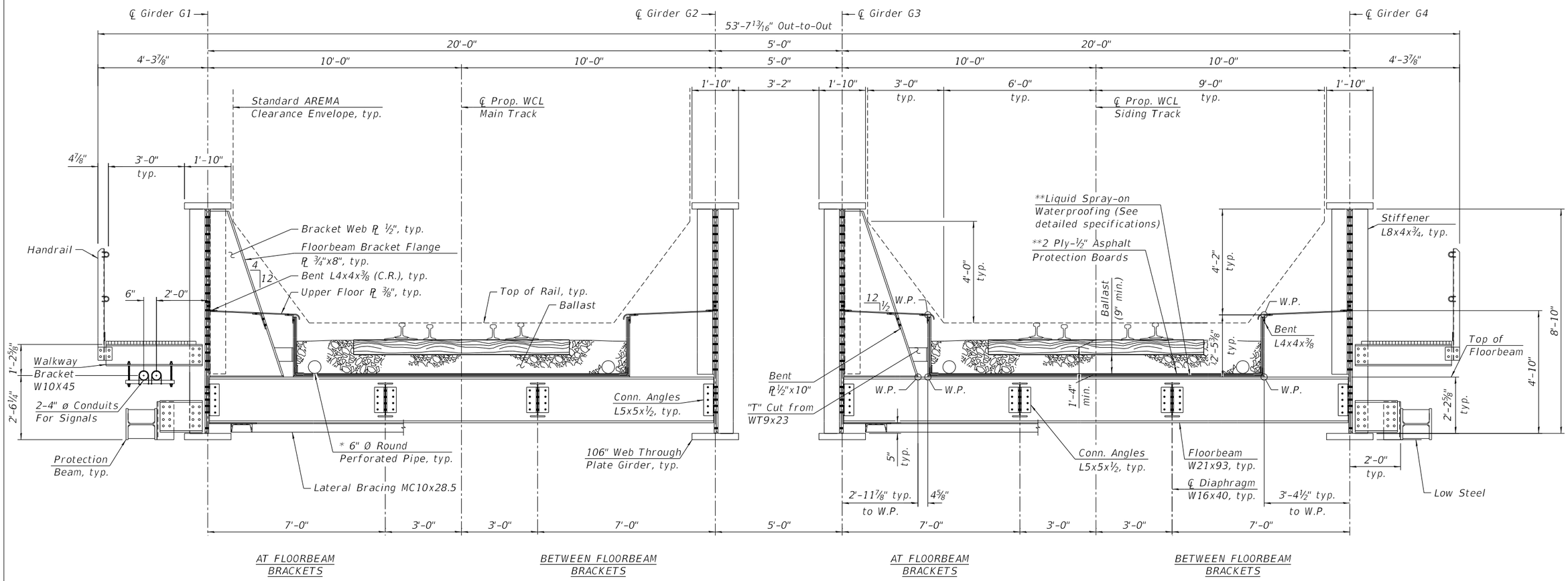


## PROPOSED CROSS SECTION

(Looking South)

CONSTRUCTION DEPTH: 4'-7 3/8" MIN.

8 1/16" - Rail & Tie Plate

7" - Tie

9" - Ballast (min.)

1" - Asphalt Protection Boards

1/16" - Waterproofing

5/8" - Floor Plate

21 5/8" - Floorbeam

5" - Top of Girder Bottom Flange to bottom of Floorbeam

3" - Girder Flange

Notes:

1. T/Rail to T/Tie = 8 1/16". Dimension includes height of 136 lb. rail at 7 5/16", and thickness of 13" tie plate of 3/4".

* Cost included with Drainage System for Structures.
** Cost Included with Membrane Waterproofing (Special).

6:07:44 PM
FILE NAME: Deck Cross Section

TRANSYSTEMS

| | | | |
|---|---|---|---|
| USER NAME = brvanderwal | DESIGNED - JRM | REVISED - | |
| | CHECKED - RNW | REVISED - | |
| PLOT SCALE = 4:0.0000 ':" / in. | DRAWN - MDG | REVISED - | |
| PLOT DATE = 1/25/2025 | CHECKED - JRM | REVISED - | |

STATE OF ILLINOIS
DEPARTMENT OF TRANSPORTATION

DECK CROSS SECTION
STRUCTURE NO. 022-9948

SHEET 25 OF 45 SHEETS

| F.A.U. RTE. | SECTION | COUNTY | TOTAL SHEETS | SHEET NO. |
|---|---|---|---|---|
| 1509 | 06-00133-00-BR | DUPAGE | 426 | 182 |

CONTRACT NO. 61G79

ILLINOIS FED. AID PROJECT

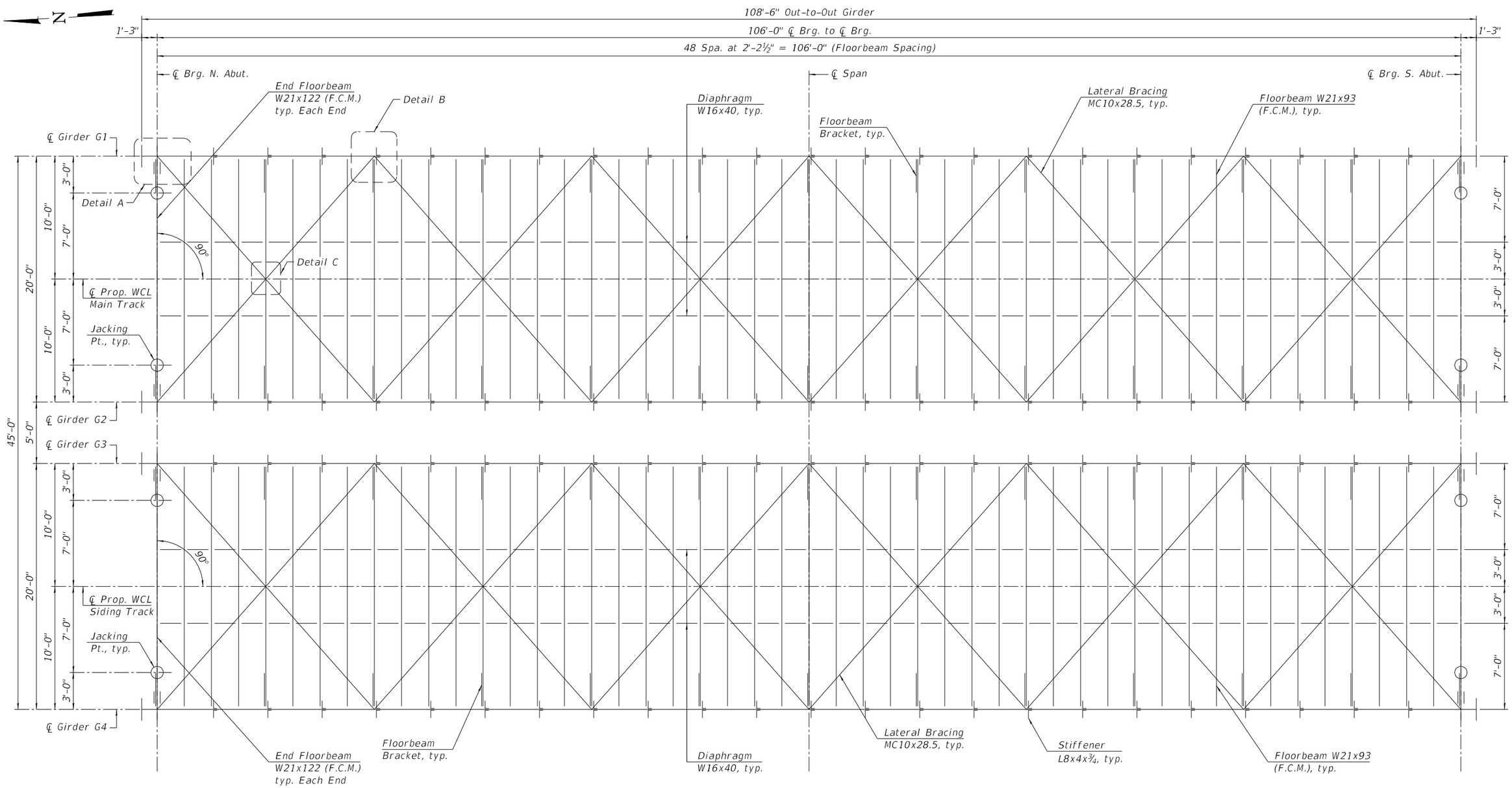


## FRAMING PLAN

Notes:

1. (F.C.M.) indicates Fracture Critical Member.
2. For Details A, B, and C, see sheet 31 of 45.
3. For Protection Beam Details, see sheet 38 of 45.

6:07:46 PM
FILE NAME: Framing Plan

TRANSYSTEMS

| | | | |
|---|---|---|---|
| USER NAME = brvanderwal | DESIGNED - JRM | REVISED - | |
| | CHECKED - RNW | REVISED - | |
| PLOT SCALE = 8:0.0000 ':" / in. | DRAWN - MDG | REVISED - | |
| PLOT DATE = 1/25/2025 | CHECKED - JRM | REVISED - | |

**STATE OF ILLINOIS**
**DEPARTMENT OF TRANSPORTATION**

**FRAMING PLAN**
**STRUCTURE NO. 022-9948**

SHEET 26 OF 45 SHEETS

| F.A.U. RTE. | SECTION | COUNTY | TOTAL SHEETS | SHEET NO. |
|---|---|---|---|---|
| 1509 | 06-00133-00-BR | DUPAGE | 426 | 183 |
| | | CONTRACT NO. 61G79 | | |
| | | ILLINOIS | FED. AID PROJECT | |

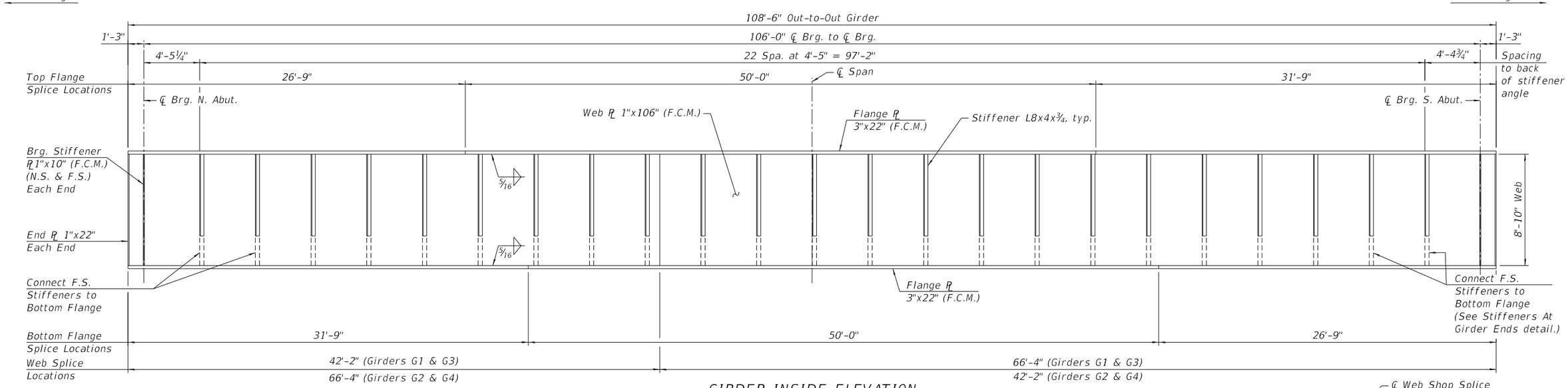


GIRDER INSIDE ELEVATION

(Girders G1 & G3 Shown. Girders G2 & G4 Similar)

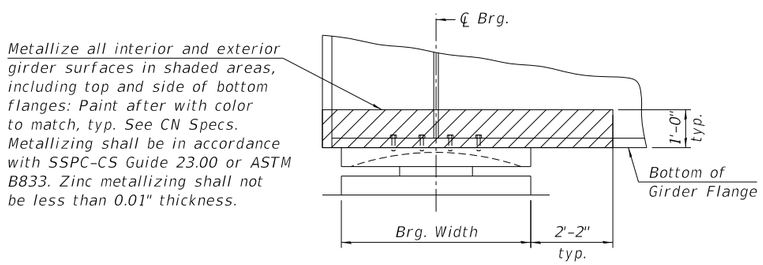


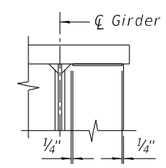


DETAIL 1

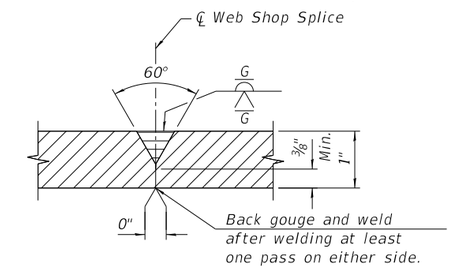


WEB SPLICE

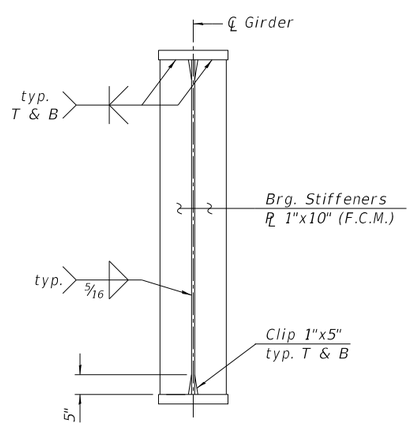


BEARING STIFFENERS

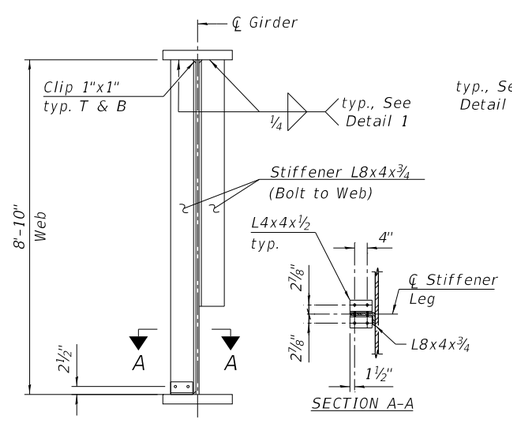


STIFFENERS AT GIRDER ENDS

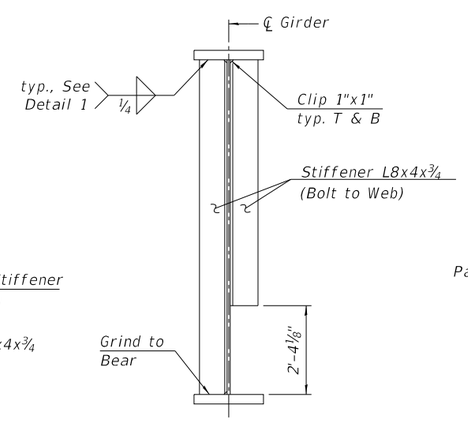


INTERMEDIATE STIFFENERS

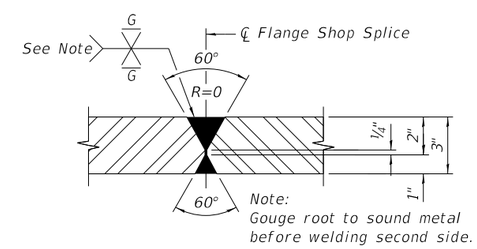


FLANGE SPLICE

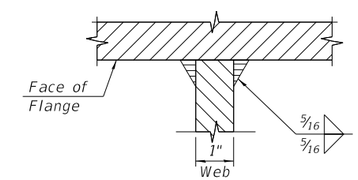


FLANGE TO WEB WELD

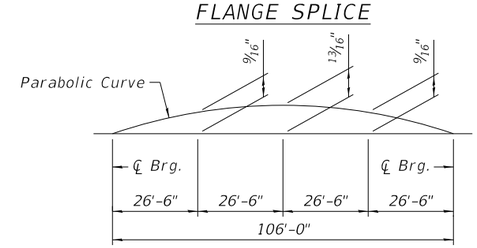


CAMBER DIAGRAM

(All Girders)

Notes:

1. (F.C.M.) indicates Fracture Critical Member.
2. Flange and Web Shop Splices are optional and shall be confirmed by the Fabricator.
3. Deviation from straightness of main girders shall not exceed ¼".
4. Deviation resulting in negative camber shall not be permitted.
5. N.S. denotes Near Side, F.S. denotes Far Side.

6:07:49 PM
FILE NAME: Girder Details 1

TRANSYSTEMS

| | | | |
|---|---|---|---|
| USER NAME = brvanderwal | DESIGNED - JRM | REVISED - | |
| | CHECKED - RNW | REVISED - | |
| PLOT SCALE = 8:0.0000 ':" / in. | DRAWN - MDG | REVISED - | |
| PLOT DATE = 1/25/2025 | CHECKED - JRM | REVISED - | |

STATE OF ILLINOIS
DEPARTMENT OF TRANSPORTATION

GIRDER DETAILS 1
STRUCTURE NO. 022-9948

SHEET 27 OF 45 SHEETS

| F.A.U. RTE. | SECTION | COUNTY | TOTAL SHEETS | SHEET NO. |
|---|---|---|---|---|
| 1509 | 06-00133-00-BR | DUPAGE | 426 | 184 |
| | | CONTRACT NO. 61G79 | | |
| | | ILLINOIS | FED. AID PROJECT | |

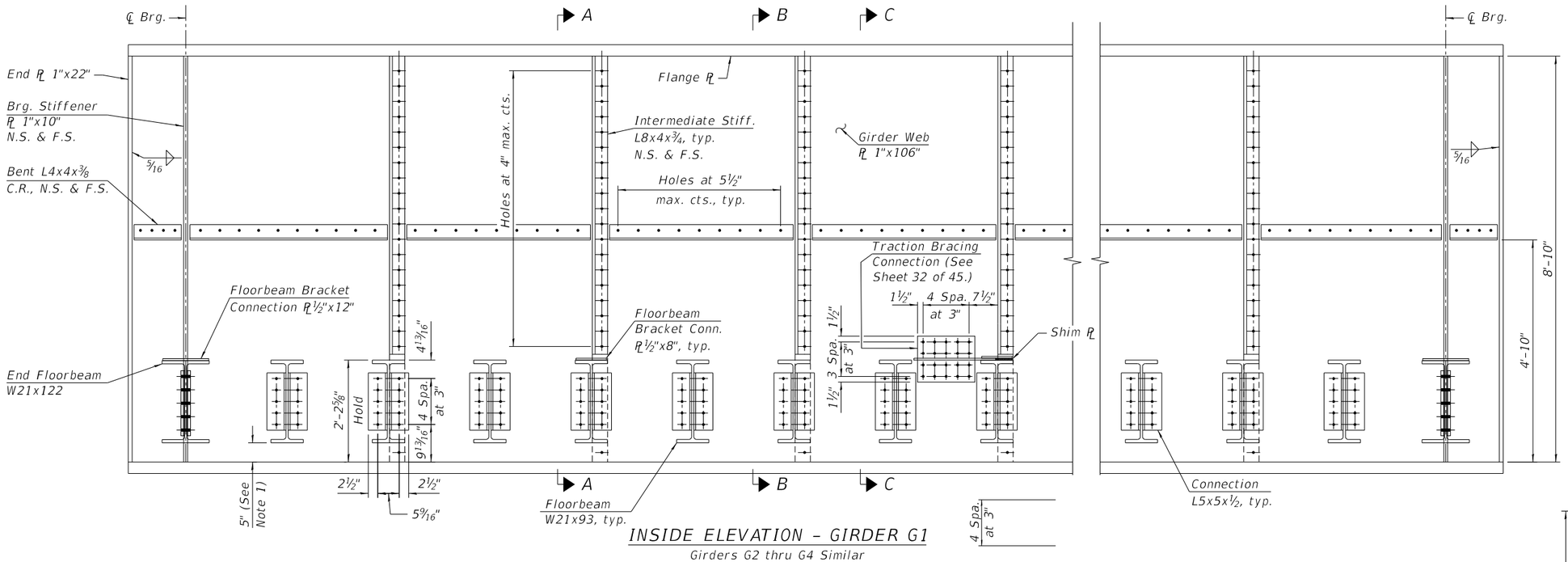


## INSIDE ELEVATION - GIRDER G1

Girders G2 thru G4 Similar

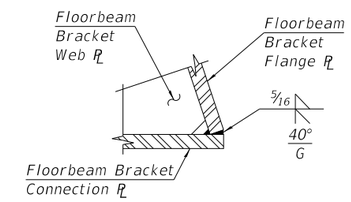


## DETAIL 1

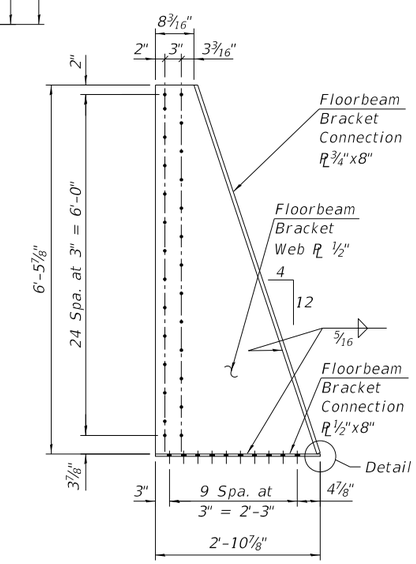


## FLOORBEAM BRACKET DETAIL

Floorbeam Bracket flange plates shall be flat and at right angles to the Bracket web plate after welding has been completed.

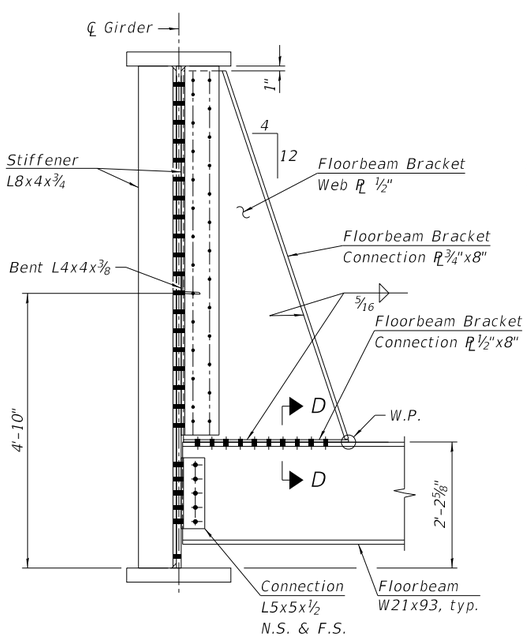


## SECTION A-A

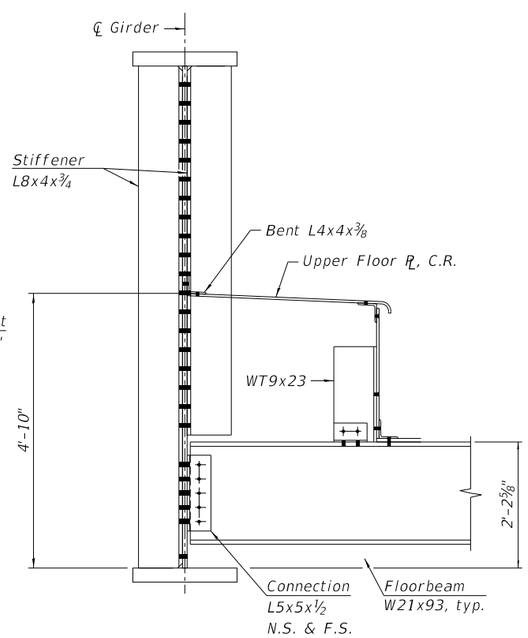


## SECTION B-B

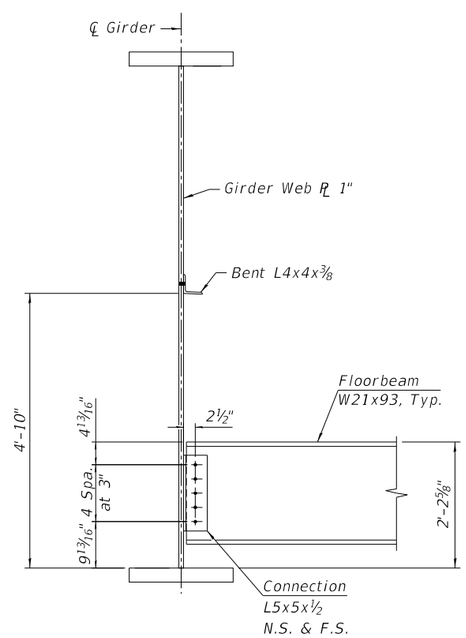


## SECTION C-C

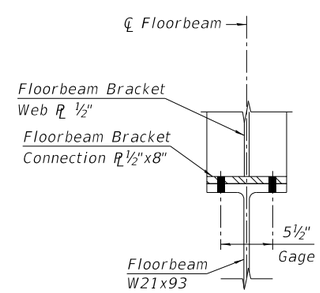


## SECTION D-D

Notes:

1. Top flange of all floorbeams to be in the same plane. Dimensions from bottom of floorbeam flange to bottom of girder web will vary to compensate for the natural camber of the floorbeams.

6:07:52 PM
FILE NAME: Girder Details 2

TRANSYSTEMS

| | | | |
|---|---|---|---|
| USER NAME = brvanderwal | DESIGNED - JRM | REVISED - | |
| | CHECKED - RNW | REVISED - | |
| PLOT SCALE = 2.666667 ' / in. | DRAWN - MDG | REVISED - | |
| PLOT DATE = 1/25/2025 | CHECKED - JRM | REVISED - | |

STATE OF ILLINOIS
DEPARTMENT OF TRANSPORTATION

GIRDER DETAILS 2
STRUCTURE NO. 022-9948

SHEET 28 OF 45 SHEETS

| F.A.U. RTE. | SECTION | COUNTY | TOTAL SHEETS | SHEET NO. |
|---|---|---|---|---|
| 1509 | 06-00133-00-BR | DUPAGE | 426 | 185 |
| | | CONTRACT NO. 61G79 | | |
| | | ILLINOIS | FED. AID PROJECT | |

## MOMENT AND SHEAR PER GIRDER

Girders G1 Thru G4

| DESCRIPTION | | | AT 0.5L |
|---|---|---|---|
| MOMENT | | | |
| Dead Load | | ('k) | 5,685 |
| Live Load (E90) | | ('k) | 8,088 |
| Impact | | ('k) | 2,103 |
| Total | | ('k) | 15,876 |
| Section | Web | | 1"x106" |
| | Flanges | | 3"x22" |
| Gross I Furnished | | ($in^4$) | 491,423 |
| Net I Furnished | | ($in^4$) | 491,423 |
| Net Section Modulus | | ($in^3$) | 8,775 |
| Allow Max. Compressive Stress in Flange | | (ksi) | 27.5 |
| Actual Max. Compressive Stress in Flange | | (ksi) | 21.7 |
| Allow Max. Tensile Stress in Flange | | (ksi) | 27.5 |
| Actual Max. Tensile Stress in Flange | | (ksi) | 21.7 |
| Allow Max. Deflection Live Load + Impact | | (in) | 1.70 |
| Actual Max. Deflection Live Load + Impact | | (in) | 1.46 |
| SHEAR | | | |
| Dead Load | | (k) | 214.5 |
| Live Load (E90) | | (k) | 353.8 |
| Impact | | (k) | 92.0 |
| Total | | (k) | 660.3 |
| Allow Max. Web Shear Stress | | (ksi) | 17.5 |
| Actual Max. Web Shear Stress | | (ksi) | 6.2 |
| End Stiffener Column Area Req'd | | ($in^2$) | 27.7 |
| Section (2 Plates) | | | 1"x10" |
| End Stiffener Column Area Furn. | | ($in^2$) | 32.0 |
| FATIGUE | | | |
| Allowable Stress Range Fatigue $S_{RFAT}$ (Cat. B) | | (ksi) | 16.0 |
| Actual Stress Range Fatigue $S_{RFAT}$ | | (ksi) | 12.1 |

## MOMENT AND SHEAR PER GIRDER

Girders G1 Thru G4

| DESCRIPTION | | FLOORBEAM | END FLOORBEAM | |
|---|---|---|---|---|
| | | | BRIDGE | JACKING |
| MOMENT | | | | |
| Dead Load | ('k) | 39.1 | 54.6 | 653.7 |
| Live Load (E90) | ('k) | 190.5 | 267.7 | -- |
| Impact | ('k) | 76.8 | 108.0 | -- |
| Total | ('k) | 306.4 | 430.3 | 653.7 |
| Section | ('k) | W21x93 | W21x122 | |
| Gross I Furnished | ($in^4$) | 2,070 | 2,960 | |
| Net I Furnished | ($in^4$) | 2,070 | 2,745 | |
| Net Section Modulus | ($in^3$) | 192 | 267 | |
| Allow Max. Compressive Stress in Flange | (ksi) | 27.5 | 27.5 | 41.3 |
| Actual Max. Compressive Stress in Flange | (ksi) | 19.2 | 18.9 | 28.7 |
| Allow Max. Tensile Stress in Flange | (ksi) | 27.5 | 27.5 | 41.3 |
| Actual Max. Tensile Stress in Flange | (ksi) | 19.2 | 19.4 | 32.6 |
| Allow Max. Deflection Live Load + Impact | (in) | 0.32 | 0.32 | -- |
| Actual Max. Deflection Live Load + Impact | (in) | 0.30 | 0.30 | -- |
| SHEAR | | | | |
| Dead Load | (k) | 8.3 | 11.6 | 227.8 |
| Live Load (E90) | (k) | 25.4 | 35.7 | -- |
| Impact | (k) | 10.3 | 14.4 | -- |
| Total | (k) | 44.0 | 61.7 | 227.8 |
| Allow Max. Web Shear Stress | (ksi) | 17.5 | 17.5 | 26.3 |
| Actual Max. Web Shear Stress | (ksi) | 3.8 | 5.2 | 19.2 |
| FATIGUE | | | | |
| Allowable Stress Range Fatigue $S_{RFAT}$ (Cat. B) | (ksi) | 16.0 | 16.0 | -- |
| Actual Stress Range Fatigue $S_{RFAT}$ | (ksi) | 14.0 | 14.1 | -- |

## BEARING ON CONCRETE

| DESCRIPTION | Girders G1 Thru G4 |
|---|---|
| Total Reaction | 661 k |
| Net Bearing Area Furnished | 1,044 $in^2$ |
| Average Bearing Pressure | 632 psi |

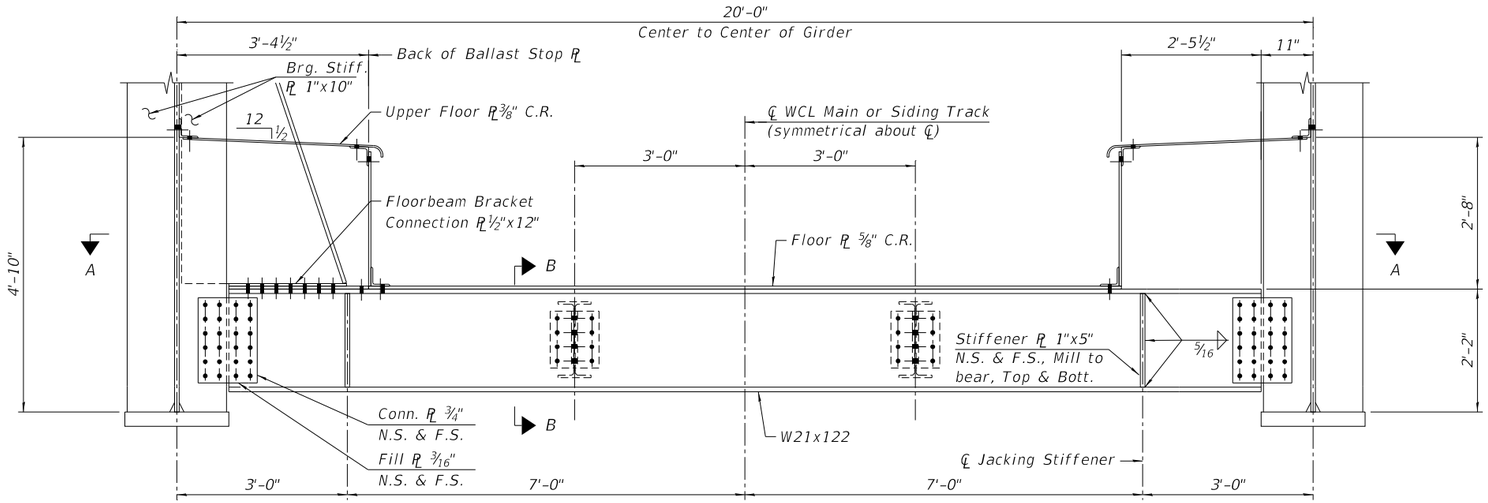


SECTION AT END FLOORBEAM

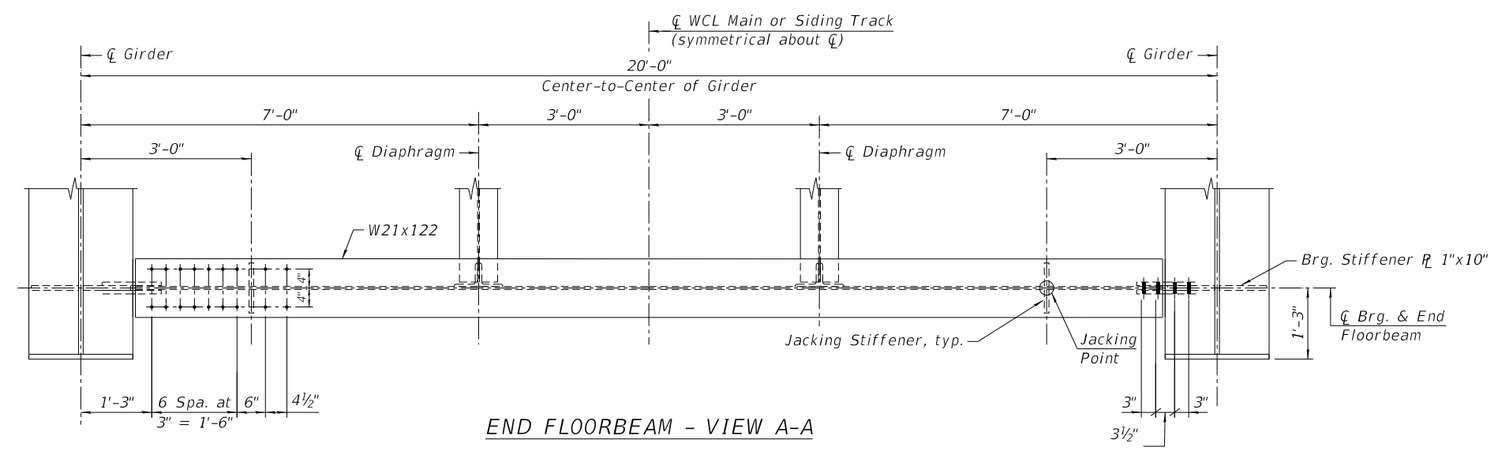


END FLOORBEAM - VIEW A-A

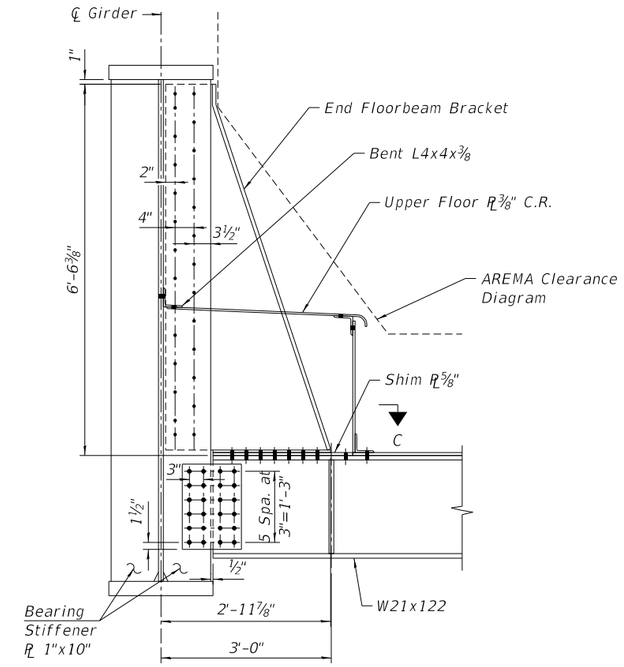


END FLOORBEAM BRACKET DETAIL

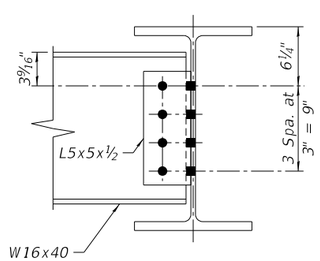


SECTION B-B

Connection typical for all diaphragms

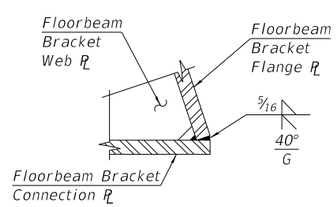


DETAIL 1

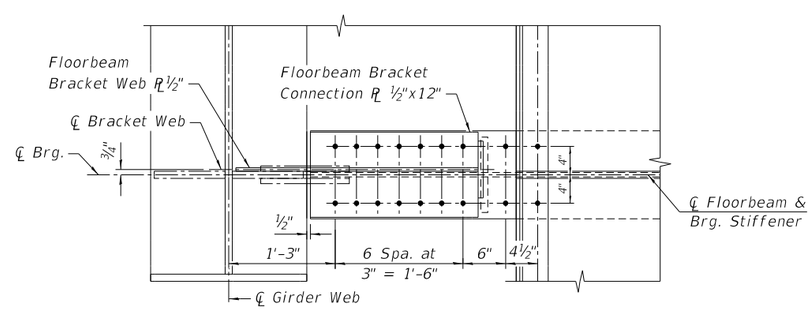


SECTION C-C

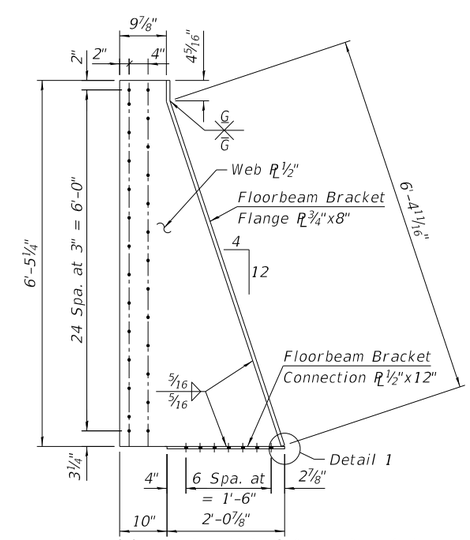


END FLOORBEAM BRACKET DETAIL

Note:
For location of countersunk bolts connecting the floor plate to the floorbeams, see sheet 32 of 45 .

6:07:56 PM
FILE NAME: End Floorbeam Details

TRANSYSTEMS

| | | | |
|---|---|---|---|
| USER NAME = brvanderwal | DESIGNED - JRM | REVISED - | |
| | CHECKED - RNW | REVISED - | |
| PLOT SCALE = 2:8.0000 ':" / in. | DRAWN - MDG | REVISED - | |
| PLOT DATE = 1/25/2025 | CHECKED - JRM | REVISED - | |

STATE OF ILLINOIS
DEPARTMENT OF TRANSPORTATION

END FLOORBEAM DETAILS
STRUCTURE NO. 022-9948

SHEET 30 OF 45 SHEETS

| F.A.U. RTE. | SECTION | COUNTY | TOTAL SHEETS | SHEET NO. |
|---|---|---|---|---|
| 1509 | 06-00133-00-BR | DUPAGE | 426 | 187 |
| | | CONTRACT NO. 61G79 | | |
| | | ILLINOIS | FED. AID PROJECT | |

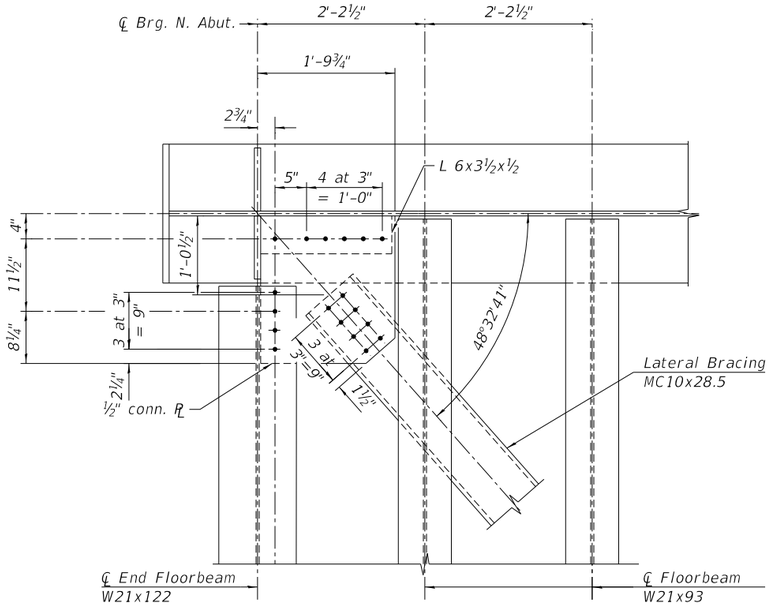


DETAIL A

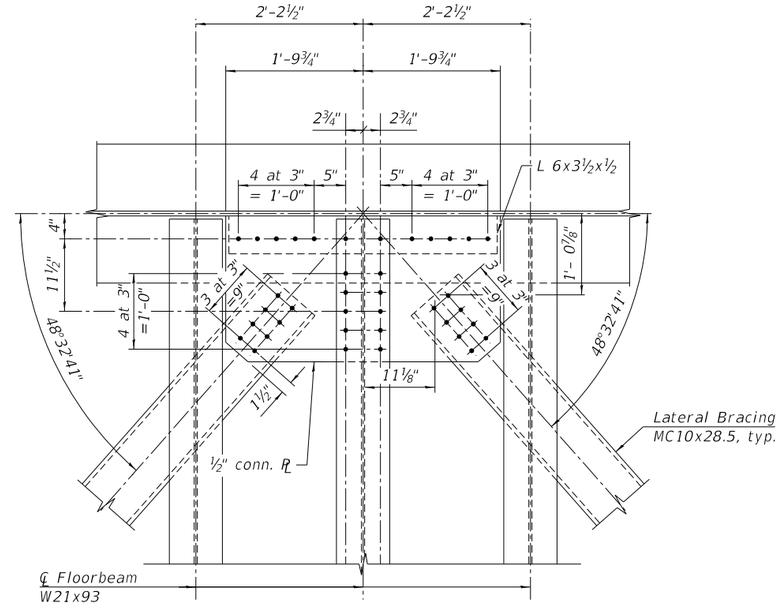


DETAIL B

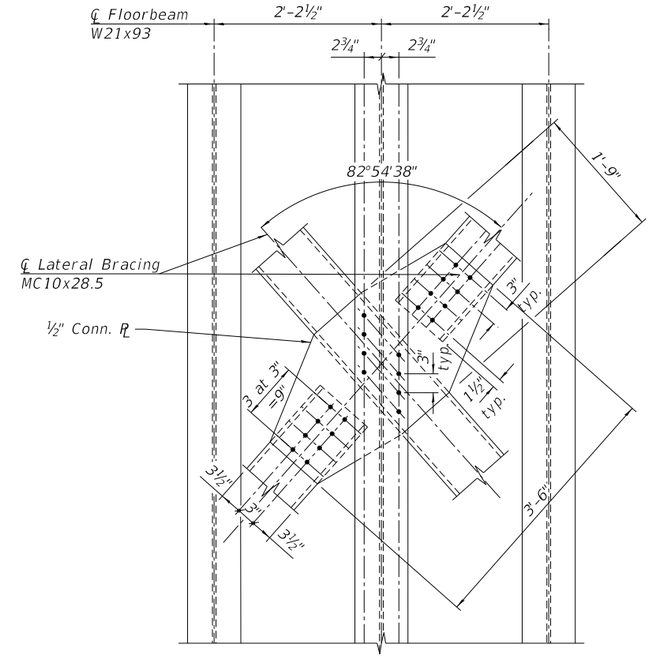


DETAIL C

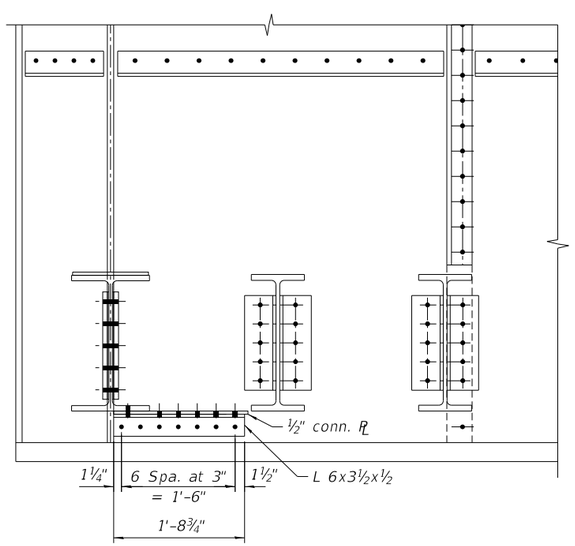


DETAIL A ELEVATION

(Lateral bracing not shown for clarity.)

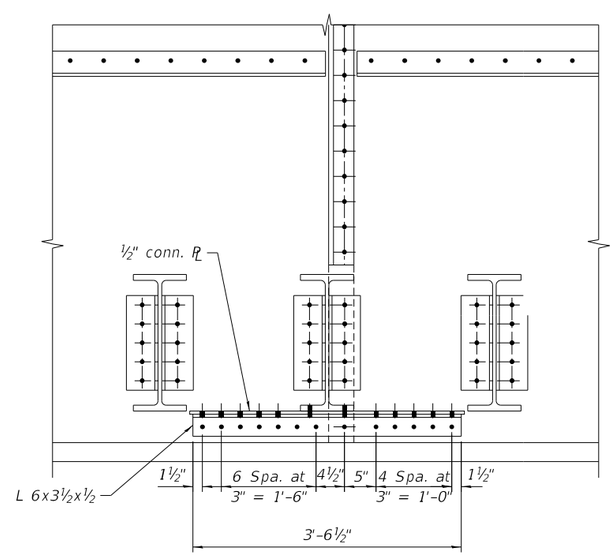


DETAIL B ELEVATION

(Lateral bracing not shown for clarity.)

Notes:
1. All holes shall be 15/16" Ø for 7/8" Ø A325 bolts.

6:08:00 PM
FILE NAME: Lateral Bracing Details

TRANSYSTEMS

| | | | |
|---|---|---|---|
| USER NAME = brvanderwal | DESIGNED - JRM | REVISED - | |
| | CHECKED - RNW | REVISED - | |
| PLOT SCALE = 2:0.0000 ':" / in. | DRAWN - MDG | REVISED - | |
| PLOT DATE = 1/25/2025 | CHECKED - JRM | REVISED - | |

STATE OF ILLINOIS
DEPARTMENT OF TRANSPORTATION

LATERAL BRACING DETAILS
STRUCTURE NO. 022-9948

SHEET 31 OF 45 SHEETS

| F.A.U. RTE. | SECTION | COUNTY | TOTAL SHEETS | SHEET NO. |
|---|---|---|---|---|
| 1509 | 06-00133-00-BR | DUPAGE | 426 | 188 |
| | | CONTRACT NO. 61G79 | | |
| | | ILLINOIS | FED. AID PROJECT | |

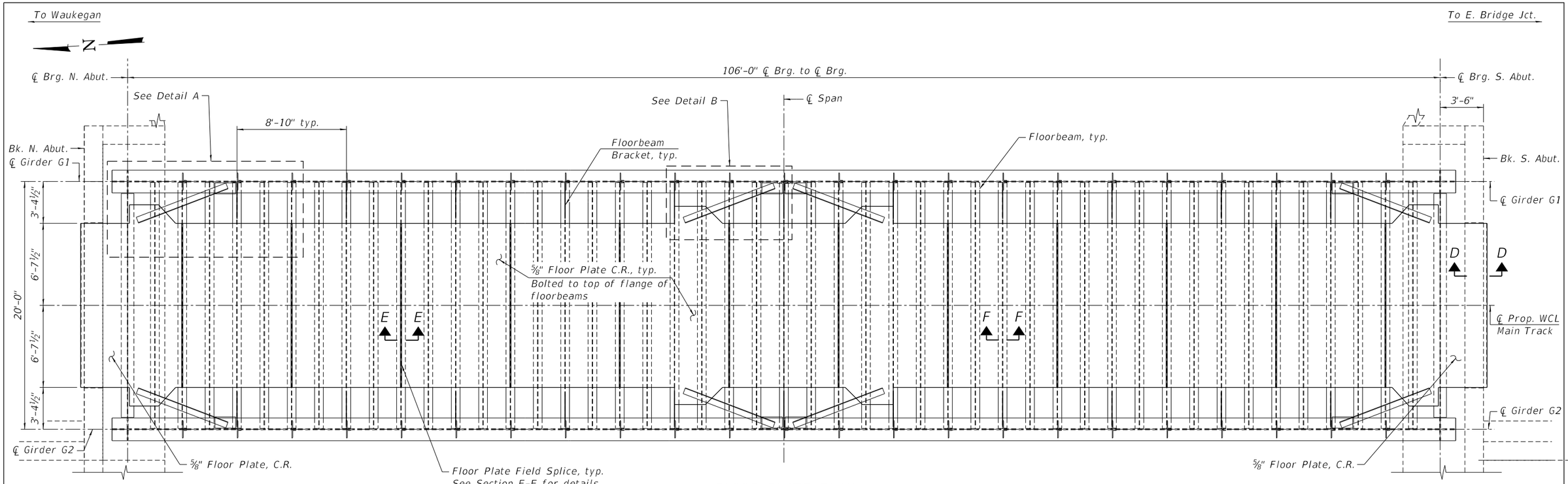


FLOOR PLATE PLAN

(East Span Shown, West Span Similar)

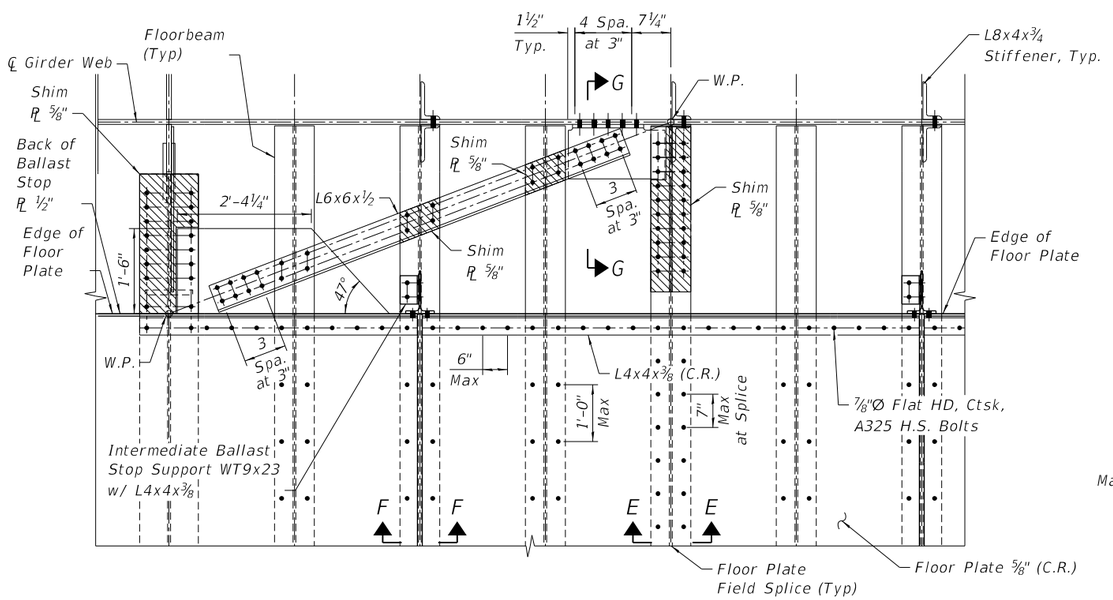


DETAIL A

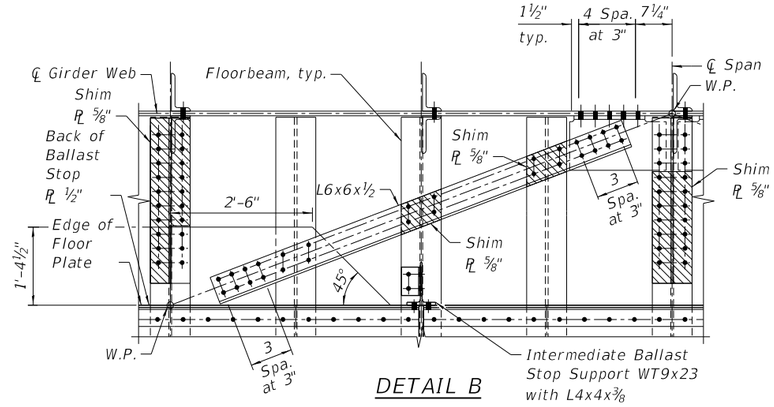


DETAIL B

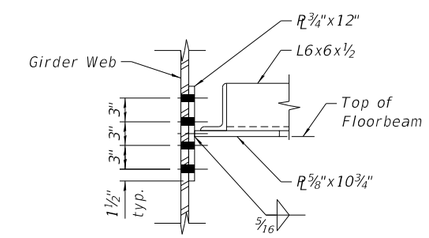


SECTION G-G

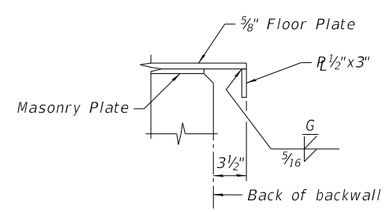


SECTION D-D

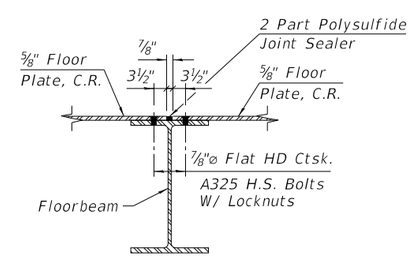


SECTION E-E

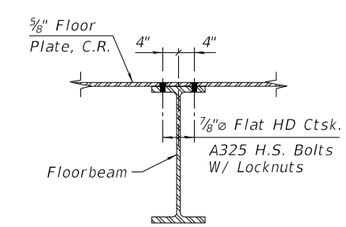


SECTION F-F

6:08:02 PM
FILE NAME: Floor Plate Plan

TRANSYSTEMS

| | | | |
|---|---|---|---|
| USER NAME = brvanderwal | DESIGNED - JRM | REVISED - | |
| | CHECKED - RNW | REVISED - | |
| PLOT SCALE = 8:0.0000 ':" / in. | DRAWN - MDG | REVISED - | |
| PLOT DATE = 1/25/2025 | CHECKED - JRM | REVISED - | |

STATE OF ILLINOIS
DEPARTMENT OF TRANSPORTATION

FLOOR PLATE PLAN
STRUCTURE NO. 022-9948

SHEET 32 OF 45 SHEETS

| F.A.U. RTE. | SECTION | COUNTY | TOTAL SHEETS | SHEET NO. |
|---|---|---|---|---|
| 1509 | 06-00133-00-BR | DUPAGE | 426 | 189 |
| | | CONTRACT NO. 61G79 | | |
| | ILLINOIS | FED. AID PROJECT | | |

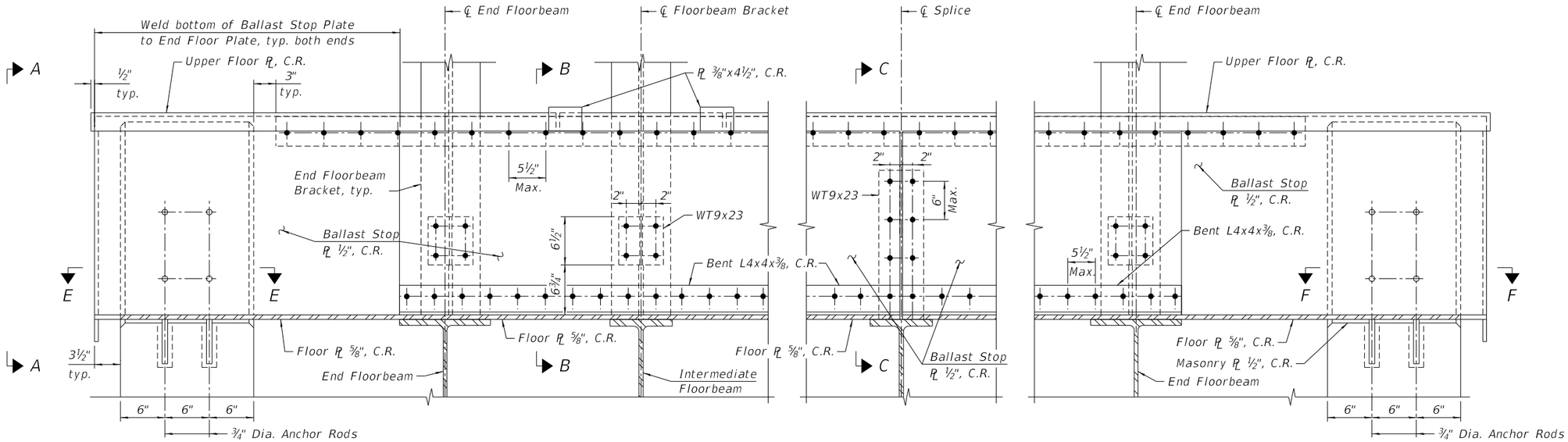


BALLAST STOP PLATE AT NORTH ABUTMENT

BALLAST STOP PLATE SPLICE

BALLAST STOP PLATE AT SOUTH ABUTMENT

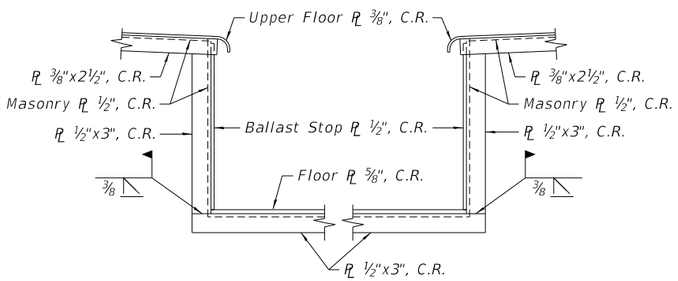


VIEW A-A

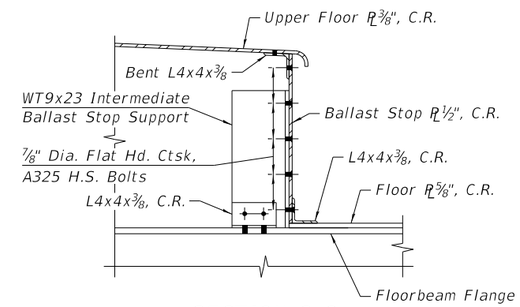


SECTION C-C

Intermediate Ballast Stop Supports are to be located midway between Floorbeam Brackets

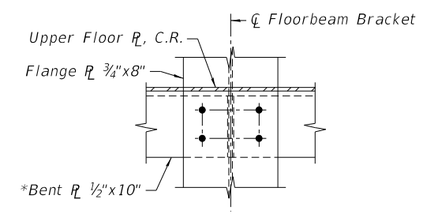


SECTION D-D

*Continuous between brackets

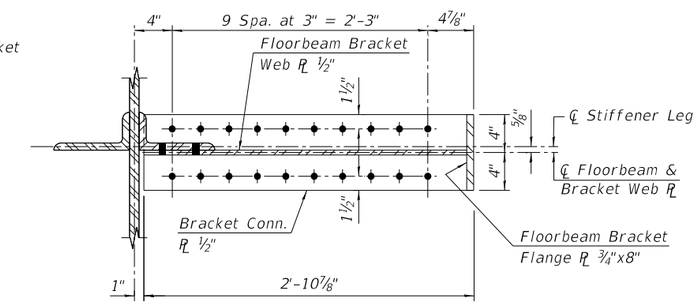


SECTION G-G

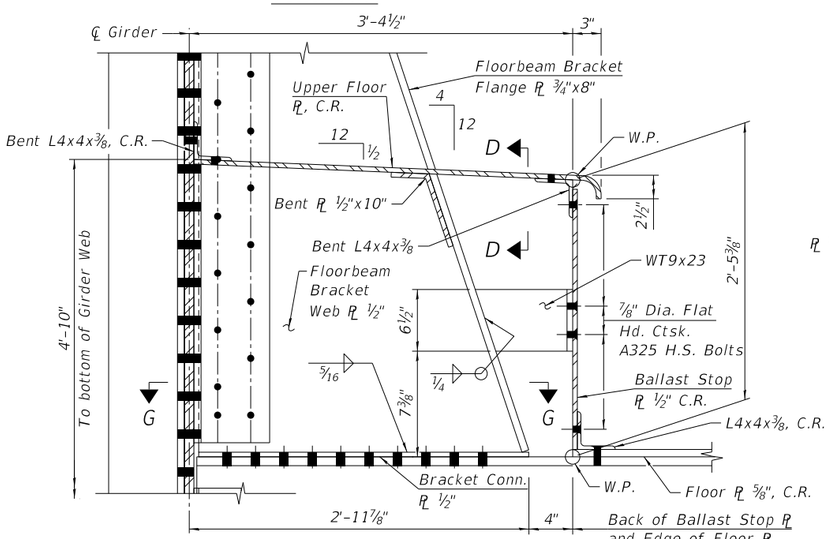


SECTION B-B

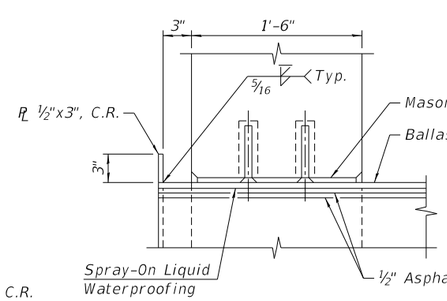


SECTION E-E

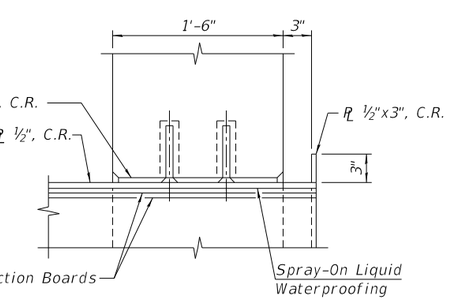


SECTION F-F

Notes:
All bolts where heads will be in contact with asphalt protection boards shall be ⅞" dia. Flat Head Ctsk. H.S. Bolts.

6:08:06 PM
FILE NAME: Ballast Stop Plate Details

| | | | | | |
|---|---|---|---|---|---|
| TRANSYSTEMS | USER NAME = brvanderwal | DESIGNED - RNW | REVISED - | STATE OF ILLINOIS DEPARTMENT OF TRANSPORTATION | BALLAST STOP PLATE DETAILS STRUCTURE NO. 022-9948 |
| | | CHECKED - JRM | REVISED - | | |
| | PLOT SCALE = 2:0.0000 ':' / in. | DRAWN - MDG | REVISED - | | SHEET 33 OF 45 SHEETS |
| | PLOT DATE = 1/25/2025 | CHECKED - JRM | REVISED - | | |

| F.A.U. RTE. | SECTION | COUNTY | TOTAL SHEETS | SHEET NO. |
|---|---|---|---|---|
| 1509 | 06-00133-00-BR | DUPAGE | 426 | 190 |
| | | CONTRACT NO. 61G79 | | |
| | | ILLINOIS | FED. AID PROJECT | |

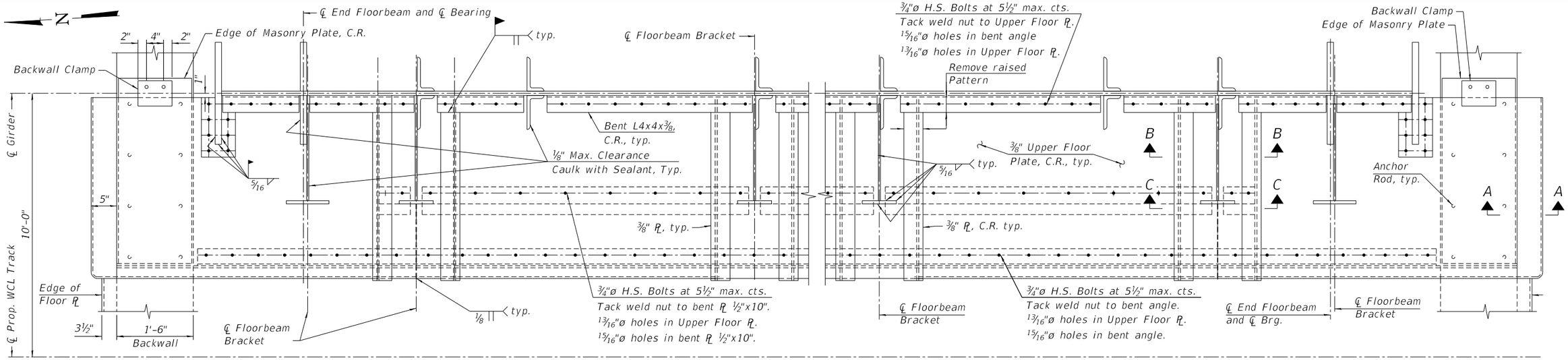


## UPPER FLOOR PLATE PLAN - GIRDERS G1 & G3

(Girders G2 & G4 similar)

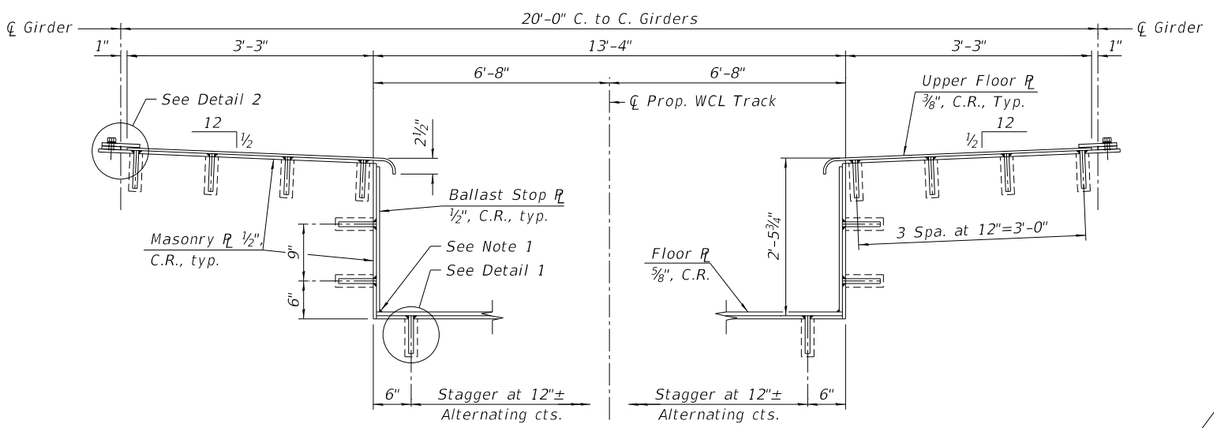


## UPPER FLOOR PLATE DETAIL AT BACKWALL

(Looking South)

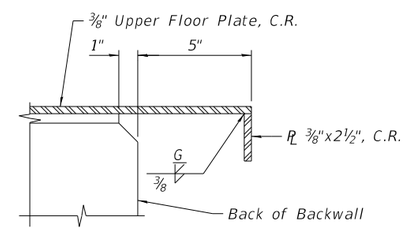


## SECTION A-A

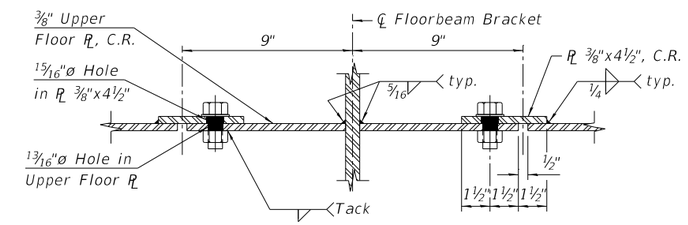


## SECTION B-B

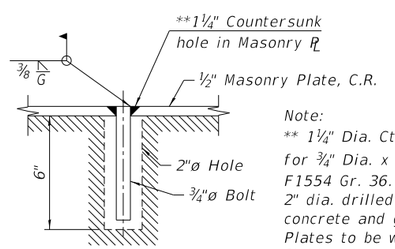


Note:
** 1¼" Dia. Ctsk. holes in Masonry Plates for ¾" Dia. x 0'-6" Anchor Bolts, ASTM F1554 Gr. 36. Anchor Bolts to be set in 2" dia. drilled or formed holes in the concrete and grouted into place. Masonry Plates to be welded to Anchor Bolts in field and ground smooth.

## DETAIL 1

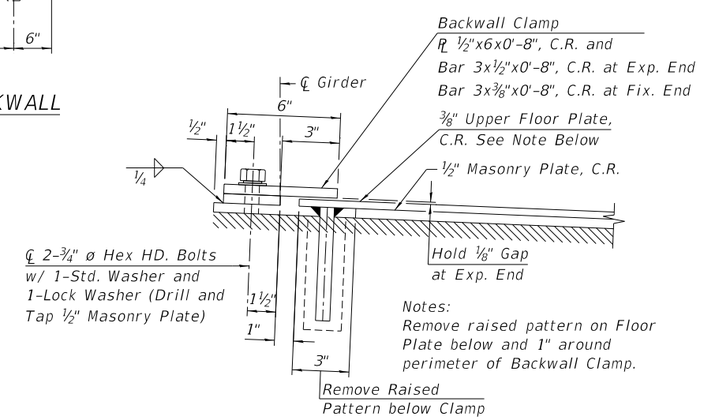


Notes:
Remove raised pattern on Floor Plate below and 1" around perimeter of Backwall Clamp.

## DETAIL 2

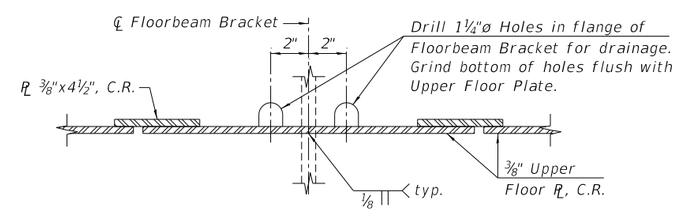


## SECTION C-C

NOTES:

1. Weld Ballast Stop PL to Floor PL over backwall, See Sheet 33 of 45.

6:08:11 PM
FILE NAME: Upper Floor plate Details

TRANSYSTEMS

| | | | |
|---|---|---|---|
| USER NAME = brvanderwal | DESIGNED - RNW | REVISED - | |
| | CHECKED - JRM | REVISED - | |
| PLOT SCALE = 2:0.0000 ':" / in. | DRAWN - MDG | REVISED - | |
| PLOT DATE = 1/25/2025 | CHECKED - JRM | REVISED - | |

STATE OF ILLINOIS
DEPARTMENT OF TRANSPORTATION

UPPER FLOOR PLATE DETAILS
STRUCTURE NO. 022-9948

SHEET 34 OF 45 SHEETS

| F.A.U. RTE. | SECTION | COUNTY | TOTAL SHEETS | SHEET NO. |
|---|---|---|---|---|
| 1509 | 06-00133-00-BR | DUPAGE | 426 | 191 |

CONTRACT NO. 61G79

ILLINOIS | FED. AID PROJECT

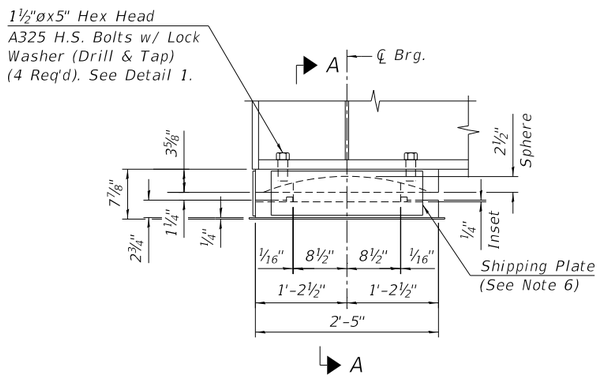


BEARING ELEVATION
(North Abutment)

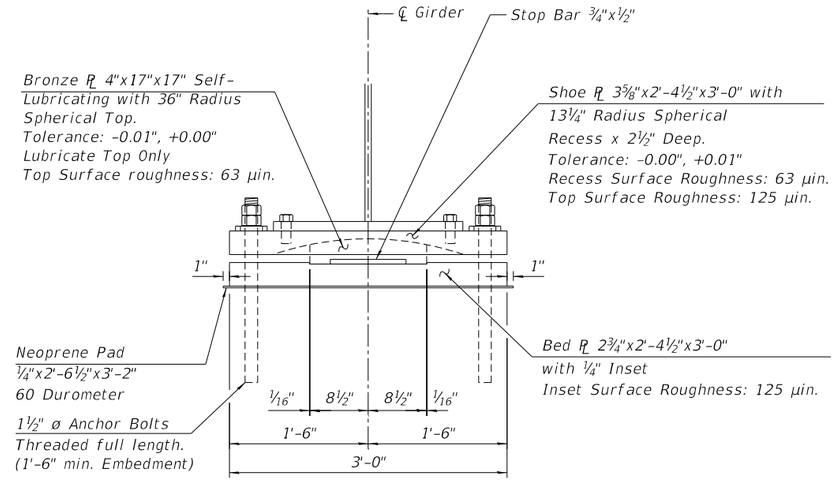


SECTION A-A

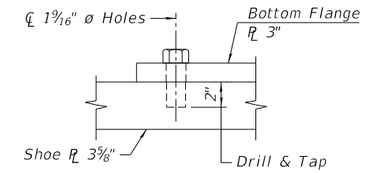


DETAIL 1

BEARING LOADS

| | APPLIED | ALLOWABLE |
|---|---|---|
| $V_{MIN}^{DL}$ | 149 kips | - |
| $V_{MAX}^{DL}$ | 215 kips | - |
| $V_{MIN}^{LL+IM}$ | 337 kips | - |
| $V_{MAX}^{LL+IM}$ | 446 kips | - |
| $V^{MIN}$ | 486 kips | - |
| $V^{MAX}$ | 661 kips | 865 kips |
| $H_{LONG}$ | 119 kips | 173 kips |
| $H_{LAT}$ | 20 kips | 173 kips |

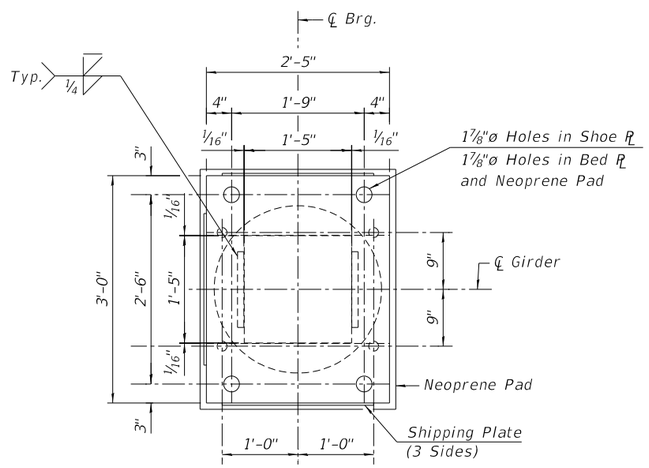


BEARING PLAN
(North Abutment)

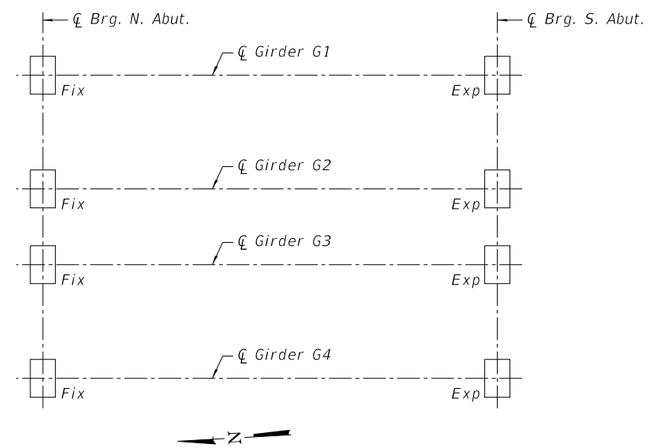


BEARING LOCATION PLAN

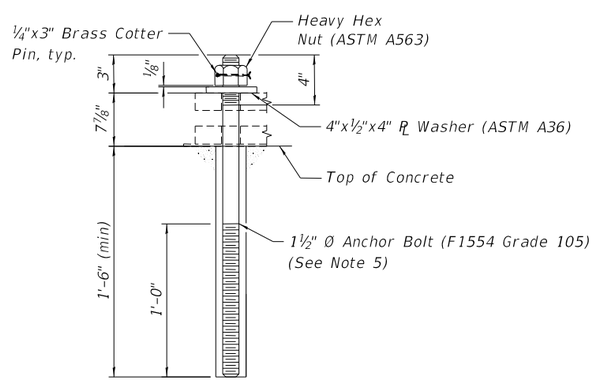


ANCHOR BOLT DETAIL

Notes:

1. Design and Workmanship shall be in accordance with the current AREMA Manual Chapter 15.

2. Material shall be in accordance with the following specifications:

   Structural Steel: ASTM A709 Grade 50W for Bed and Shoe Plates.

   Bronze Plates: ASTM B22-08 Copper Alloy UNS No. C86300.

   Welding: AWS D1.5.

   Anchor Bolts: ASTM F1554, Gr. 105

   High Strength Bolts: ASTM F3125 Grade A325 Type 1.

3. All holes shall be drilled or sub-punched and reamed.

4. All non-sliding surfaces of bearing plates shall be zinc-metallized in accordance with ASTM B833. Zinc coating shall not be less than 0.01".

5. All Anchor Bolts, nuts, and washers shall be galvanized in accordance with ASTM F2329. Concrete to be drilled after determining bolt location. Bolts to be grouted using non-shrink grout.

6. Bearings shall be shipped assembled with plates 5/16"x6½"x2'-0" and ⅝"ø Machine Bolts. Plates shall be removed after Anchor Bolts have been installed (3 Plates per Bearing).

7. Two ⅛" adjusting, galv. shim plates shall be provided for each bearing in addition to all other plates or shims and they shall be placed between the Bed Plate and the Neoprene Pad if required. Shim plates shall match the footprint of the Bed Plate.

8. Estimated weight of structural steel = 1,195 pounds per bearing. (2 req'd). Cost of fixed bearings and bronze plates included with Furnishing and Erecting Structural Steel, Special.

9. Surface roughness of sliding and rotational elements shall not exceed the limits indicated (RMS) in accordance with ANSI/ASME B46.1, Surface Texture.

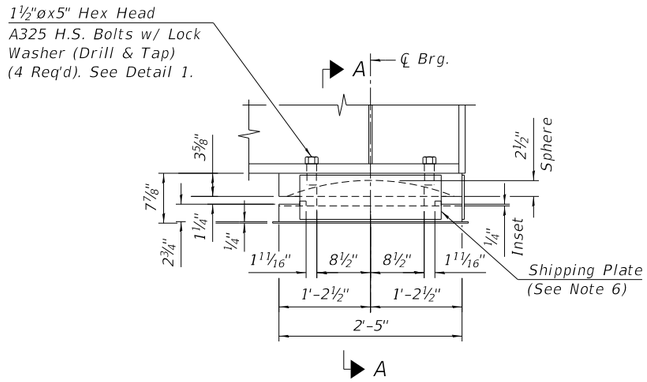


BEARING ELEVATION
(South Abutment)

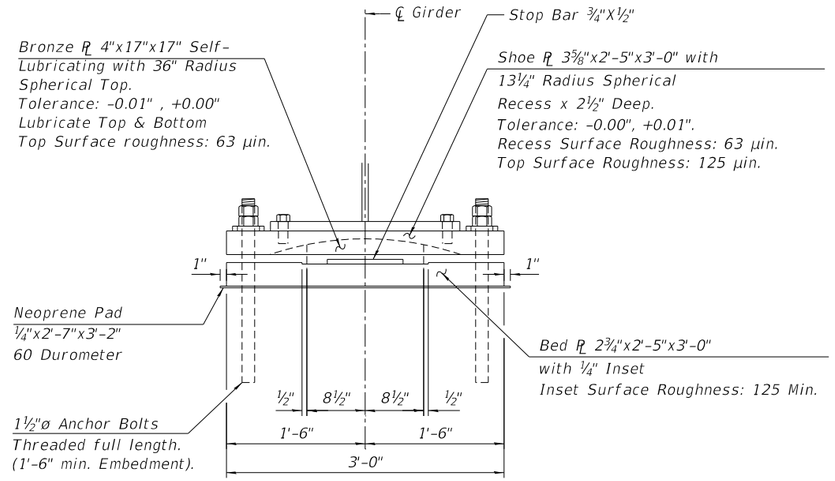


SECTION A-A

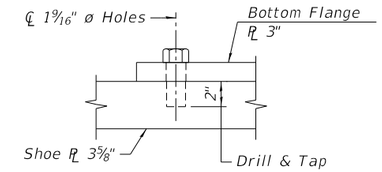


DETAIL 1

BEARING LOADS

| | APPLIED | ALLOWABLE |
|---|---|---|
| $V_{MIN}^{DL}$ | 149 kips | - |
| $V_{MAX}^{DL}$ | 215 kips | - |
| $V_{MIN}^{LL+IM}$ | 337 kips | - |
| $V_{MAX}^{LL+IM}$ | 446 kips | - |
| $V^{MIN}$ | 486 kips | - |
| $V^{MAX}$ | 661 kips | 865 kips |
| $H_{LONG}$ | 66 kips | 173 kips |
| $H_{LAT}$ | 20 kips | 173 kips |

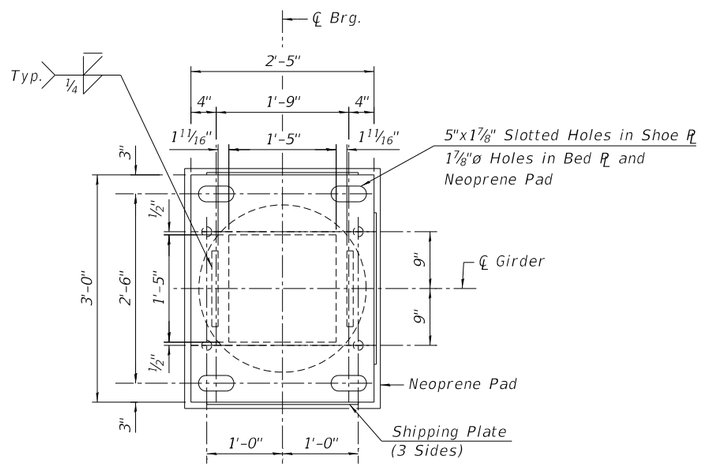


BEARING PLAN
(South Abutment)

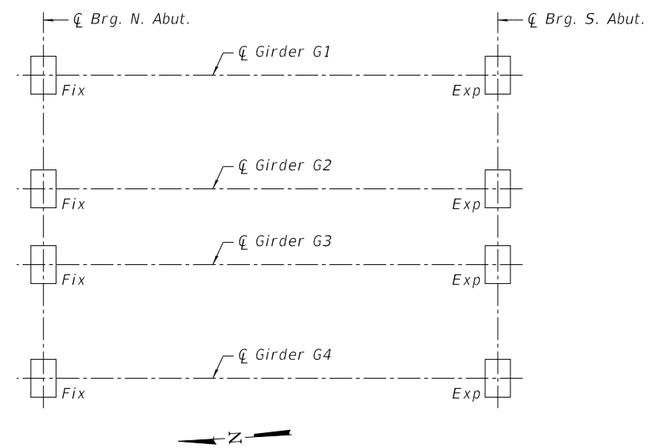


BEARING LOCATION PLAN

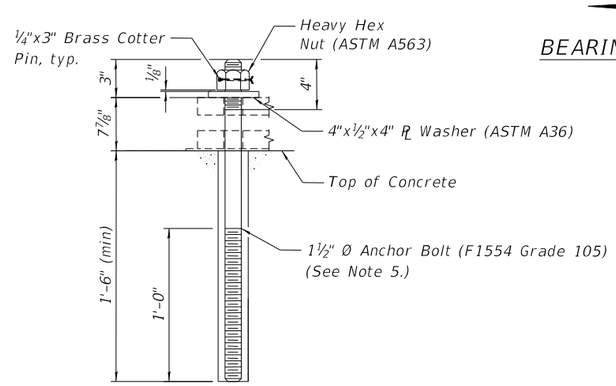


ANCHOR BOLT DETAIL

Notes:

1. Design and Workmanship shall be in accordance with the current AREMA Manual Chapter 15.

2. Material shall be in accordance with the following specifications:

   Structural Steel: ASTM A709 Grade 50W for Bed and Shoe Plates.

   Bronze Plates: ASTM B22-08 Copper Alloy UNS No. C86300.

   Welding: AWS D1.5

   Anchor Bolts: ASTM F1554, Grade 105

   High Strength Bolts: ASTM F3125 Grade A325 Type 1.

3. All holes shall be drilled or sub-punched and reamed.

4. All non-sliding surfaces of bearing plates shall be zinc-metallized in accordance with ASTM B833. Zinc coating shall not be less than 0.01".

5. All Anchor Bolts, nuts, and washers shall be galvanized in accordance with ASTM F2329. Concrete to be drilled after determining bolt location. Bolts to be grouted using non-shrink grout.

6. Bearings shall be shipped assembled with plates 5/16"x6½"x2'-0" and ⅝"ø Machine Bolts. Plates shall be removed after Anchor Bolts have been installed (3 Plates per Bearing).

7. Two ⅛" adjusting, galv. shim plates shall be provided for each bearing in addition to all other plates or shims and they shall be placed between the Bed Plate and the Neoprene Pad if required. Shim plates shall match the footprint of the Bed Plate.

8. Estimated weight of structural steel = 2,070 pounds per bearing. (2 req'd). Cost of expansion bearings and bronze plates included with Furnishing and Erecting Structural Steel, Special.

9. Surface roughness of sliding and rotational elements shall not exceed the limits indicated (RMS) in accordance with ANSI/ASME B46.1, Surface Texture.

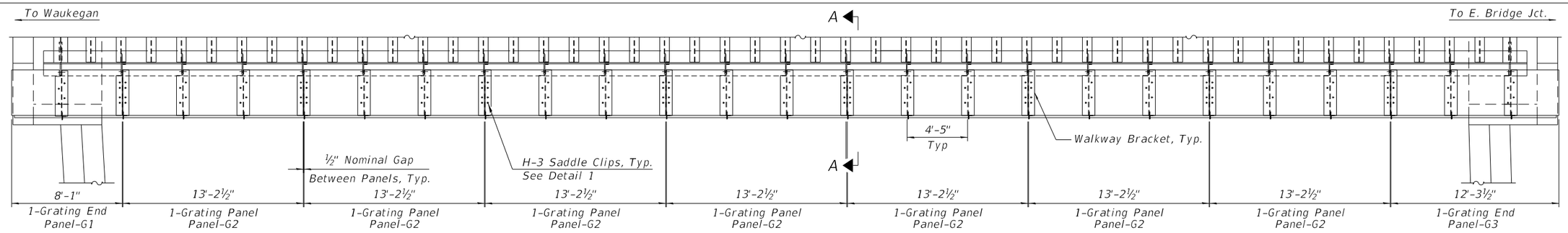


## WALKWAY PLAN

(West Walkway Shown, East Walkway Similar)

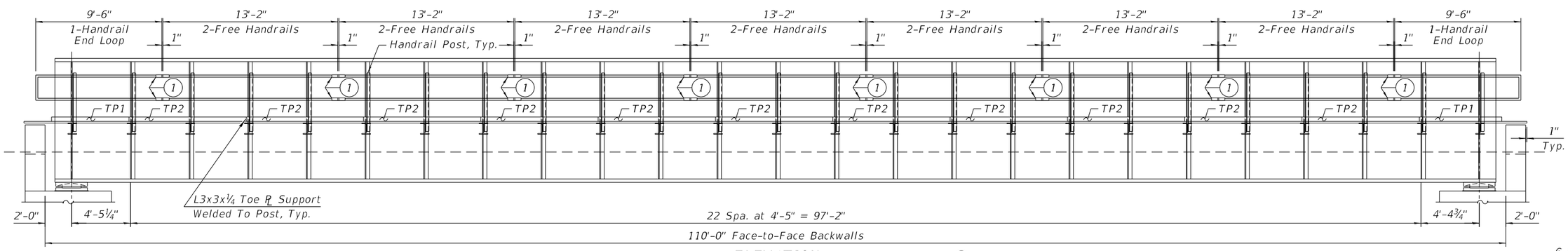


## ELEVATION

(West Elevation Shown, East Elevation Similar)

(1) 1-Handrail Splice Each Rail (1" Gap, typ.)

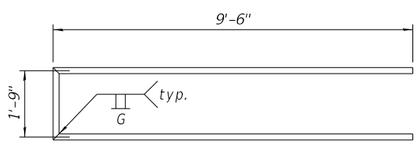


## HANDRAIL END LOOP

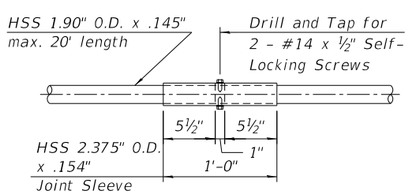


## HANDRAIL SPLICE

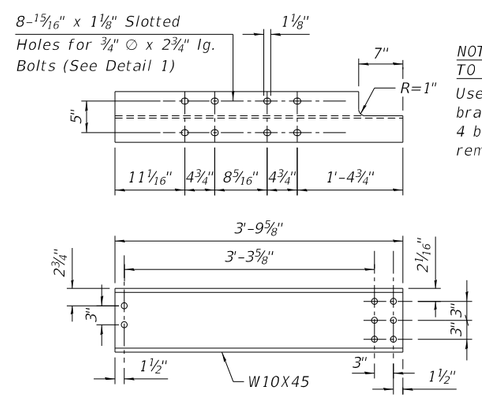


WALKWAY SUPPORT

NOTE: BOLTING GRATING TO BRACKETS

Use 8 Bolts in connection to brackets at panel ends and 4 bolts in connection to remaining brackets.

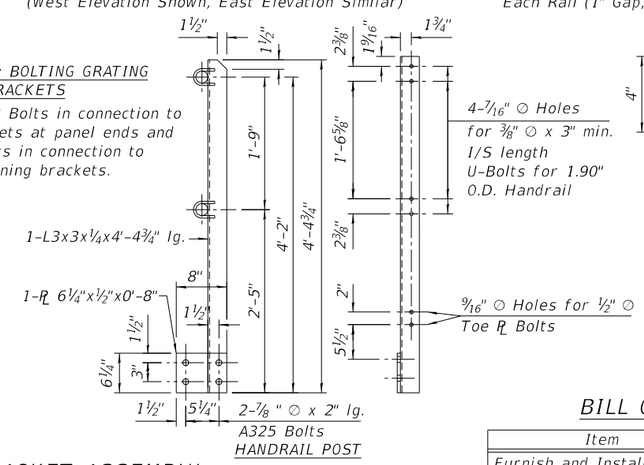


WALKWAY BRACKET ASSEMBLY

Scale: 1" = 1'-0"

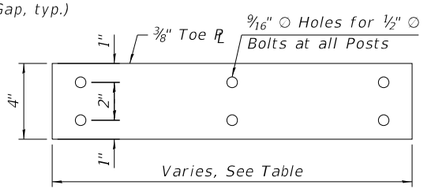


## TOE PL DETAIL

No Scale

| TOE PL LENGTHS | |
|---|---|
| TP1 | 6'-0" |
| TP2 | 8'-9½" |

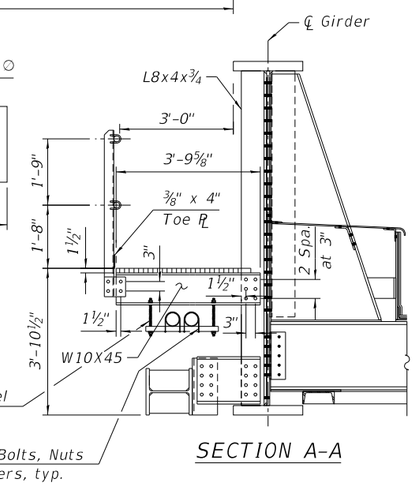


## SECTION A-A

## BILL OF MATERIAL

| Item | Unit | Total |
|---|---|---|
| Furnish and Install Walkway | Sq. Yd. | 84 |

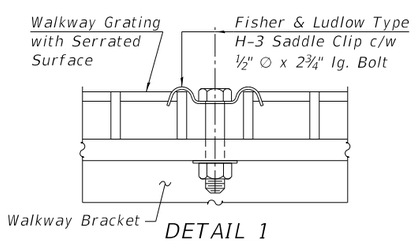


## DETAIL 1

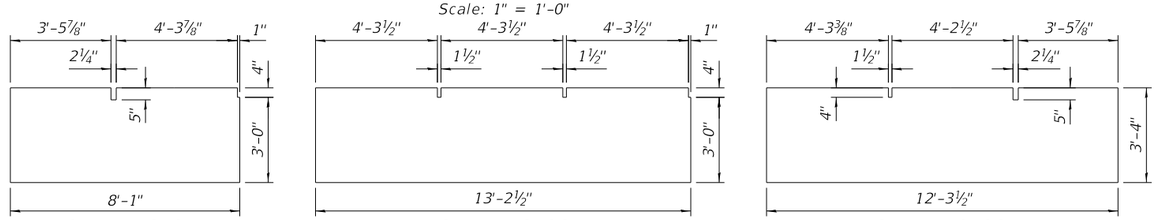


GRATING G1 GRATING G2 GRATING G3

Notes:

1. Serrated walkway grating shall be 1½" x ⅛" bearing bars at 1 3/16" c/c and cross bars at 4" c/c type 19-4, Fully banded, Galvavized (Estimated weight 7.59 lbs. per sq. ft.)
2. And saddle clips, Type H-3, By Fisher & Ludlow or equivalent.
3. All material to be hot-dip galvanized in accordance with ASTM A123.
4. Railing shall be HSS 1.90" O.D. x 0.145" Class C in accordance with ASTM A501, Hot-Dip Galvanized.

6:08:22 PM
FILE NAME: Walkway Details

TRANSYSTEMS

| | | | |
|---|---|---|---|
| USER NAME = brvanderwal | DESIGNED - RNW | REVISED - | |
| | CHECKED - JRM | REVISED - | |
| PLOT SCALE = 8.000000 ' / in. | DRAWN - GJZ | REVISED - | |
| PLOT DATE = 1/25/2025 | CHECKED - JRM | REVISED - | |

STATE OF ILLINOIS
DEPARTMENT OF TRANSPORTATION

WALKWAY DETAILS
STRUCTURE NO. 022-9948

SHEET 37 OF 45 SHEETS

| F.A.U. RTE. | SECTION | COUNTY | TOTAL SHEETS | SHEET NO. |
|---|---|---|---|---|
| 1509 | 06-00133-00-BR | DUPAGE | 426 | 194 |
| | | CONTRACT NO. 61G79 | | |
| | | ILLINOIS | FED. AID PROJECT | |

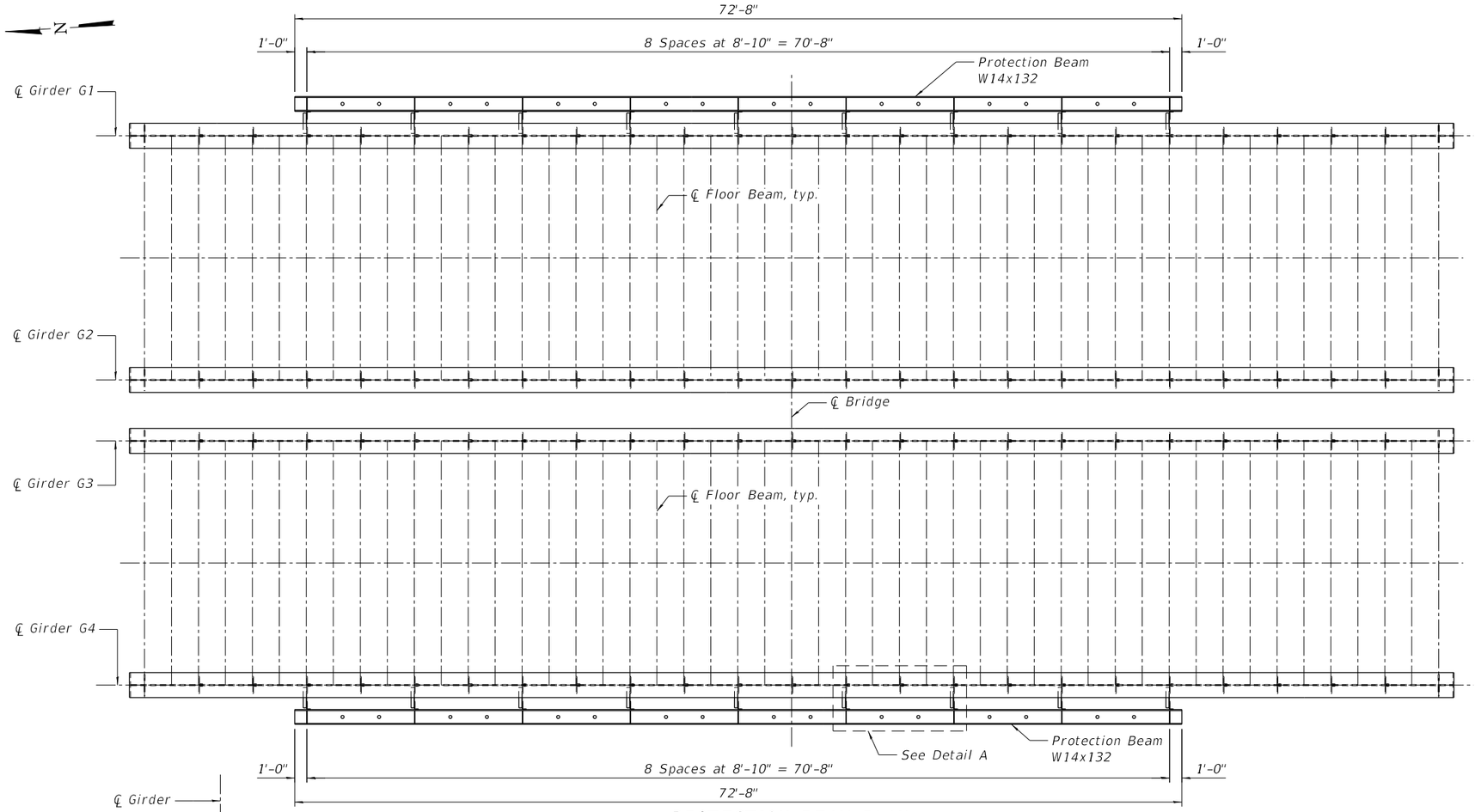


PROTECTION BEAM PLAN

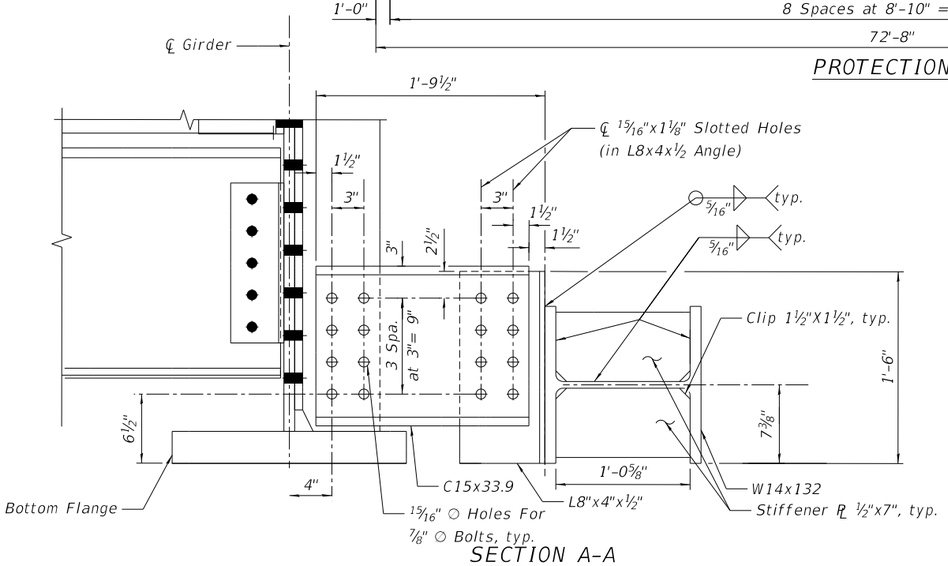


SECTION A-A

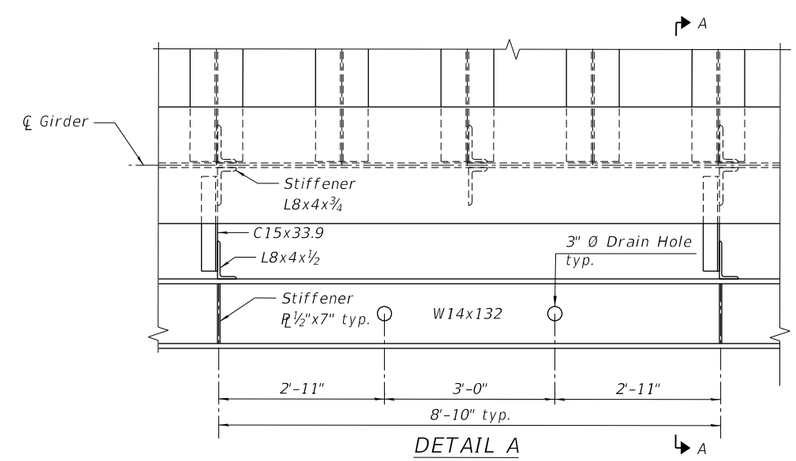


DETAIL A

6:08:32 PM
FILE NAME: Protection Beam Details

TRANSYSTEMS

| | | | |
|---|---|---|---|
| USER NAME = brvanderwal | DESIGNED - RNW | REVISED - | |
| | CHECKED - JRM | REVISED - | |
| PLOT SCALE = 10.6667 ' / in. | DRAWN - JE | REVISED - | |
| PLOT DATE = 1/25/2025 | CHECKED - JRM | REVISED - | |

STATE OF ILLINOIS
DEPARTMENT OF TRANSPORTATION

PROTECTION BEAM DETAILS
STRUCTURE NO. 022-9948

SHEET 38 OF 45 SHEETS

| F.A.U. RTE. | SECTION | COUNTY | TOTAL SHEETS | SHEET NO. |
|---|---|---|---|---|
| 1509 | 06-00133-00-BR | DUPAGE | 426 | 195 |
| | | CONTRACT NO. 61G79 | | |
| | | ILLINOIS | FED. AID PROJECT | |

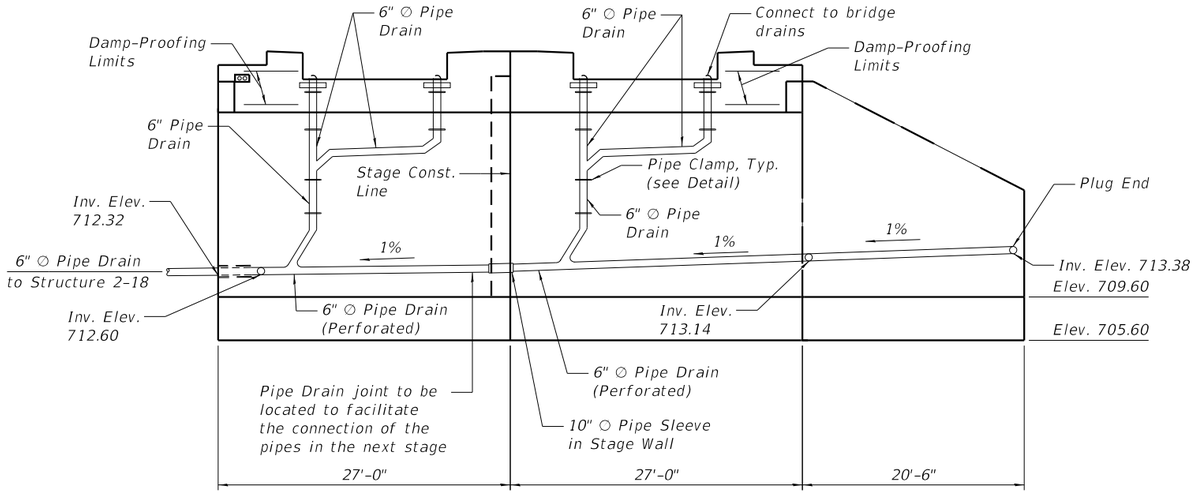


## NORTH ABUTMENT ELEVATION

(Looking South at Back Face)
(Pipes, Sleeves, Plugs, and Clamps included with Drainage System for Structures)

## BILL OF MATERIAL

| Item | Unit | Total |
|---|---|---|
| Drainage System for Structures | L. Sum | 1 |
| Pipe Underdrains for Structures, 4" | Foot | 84 |

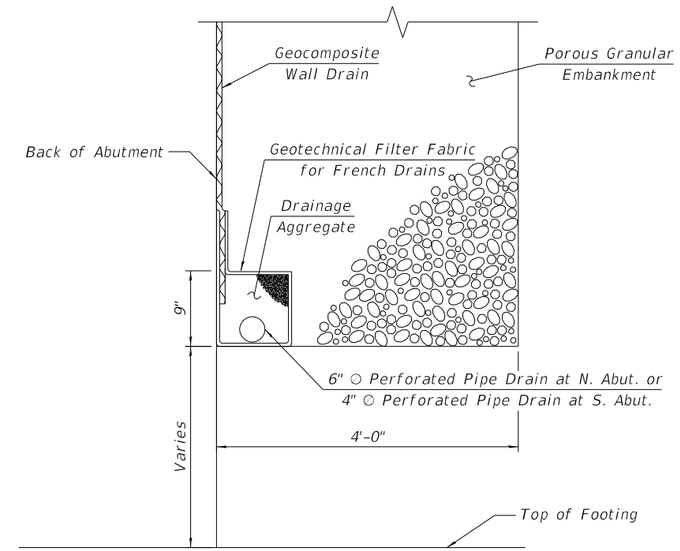


## PIPE UNDERDRAIN DETAIL

Included in the cost of Drainage System for Structures (N. Abut.) or Pipe Underdrains for Structures, 4" (S. Abut.).

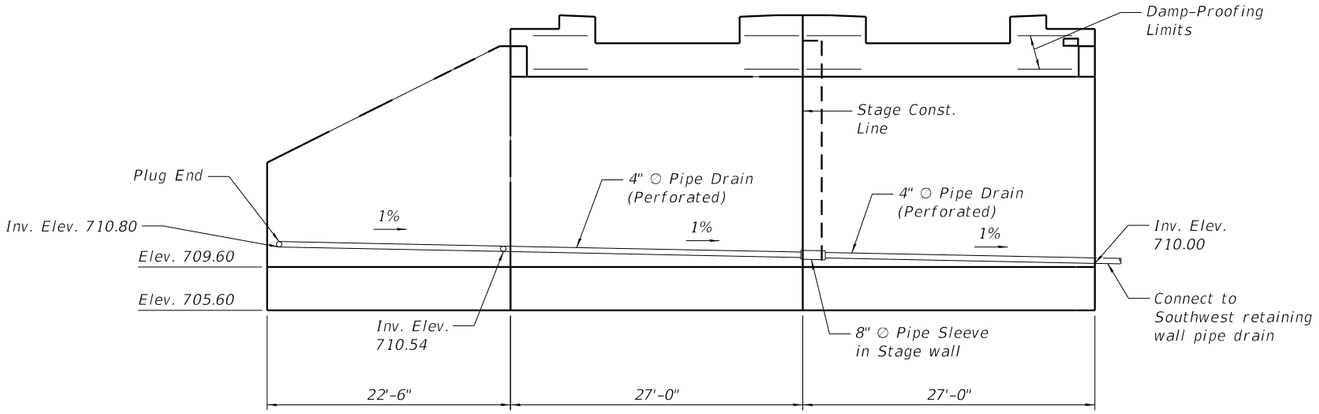


## SOUTH ABUTMENT ELEVATION

(Looking North at Back Face)
(Pipes, Sleeves, and Plugs included with Pipe Underdrains for Structures, 4")

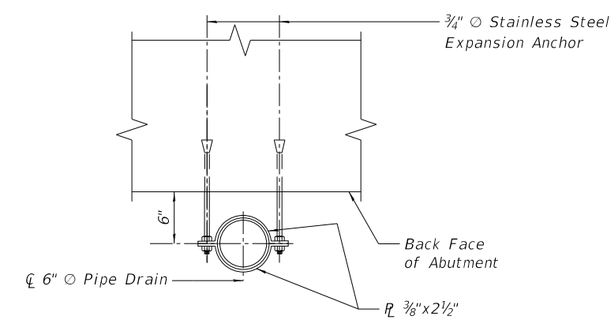


## PIPE CLAMP DETAIL

Notes:
1. See Drainage Plans for location of drainage structures.
2. All pipe drains shall consist of solid pipe, unless stated otherwise.

6:08:37 PM
FILE NAME: Drainage Details

TRANSYSTEMS

| | | | |
|---|---|---|---|
| USER NAME = brvanderwal | DESIGNED - JRM | REVISED - | |
| | CHECKED - MDS | REVISED - | |
| PLOT SCALE = 14:0.0000 ':' / in. | DRAWN - JE | REVISED - | |
| PLOT DATE = 1/25/2025 | CHECKED - JRM | REVISED - | |

STATE OF ILLINOIS
DEPARTMENT OF TRANSPORTATION

DRAINAGE DETAILS
STRUCTURE NO.022-9948

SHEET 39 OF 45 SHEETS

| F.A.U. RTE. | SECTION | COUNTY | TOTAL SHEETS | SHEET NO. |
|---|---|---|---|---|
| 1509 | 06-00133-00-BR | DUPAGE | 426 | 196 |
| | | CONTRACT NO. 61G79 | | |
| | | ILLINOIS | FED. AID PROJECT | |

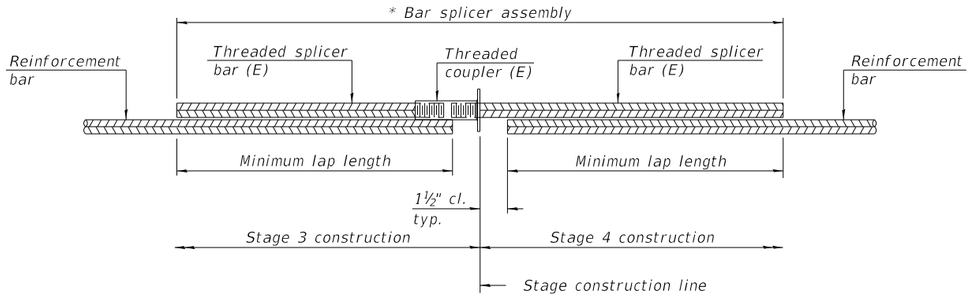


## STANDARD BAR SPLICER ASSEMBLY PLAN

(All components shall be provided from one supplier)

Threaded splicer bar length = min. lap length + 1½" + thread length

* Epoxy not required on Bar Splicer Assembly components used in conjunction with black bars.

| Location | Bar size | No. assemblies required | Minimum lap length |
|---|---|---|---|
| North Abutment Backwall | #5 | 14 | 2'-2" |
| North Abutment Stem | #5 | 36 | 2'-2" |
| North Abutment Stem Top | #5 | 5 | 3'-0" |
| North Abutment Footing | #5 | 34 | 3'-0" |
| South Abutment Backwall | #5 | 14 | 2'-2" |
| South Abutment Stem | #5 | 36 | 2'-2" |
| South Abutment Stem Top | #5 | 5 | 3'-0" |
| South Abutment Footing | #5 | 34 | 3'-0" |

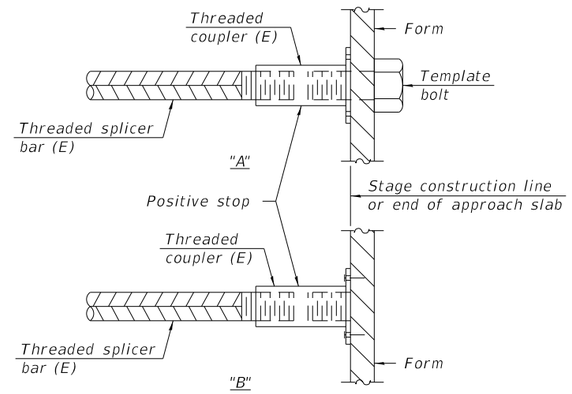


## INSTALLATION AND SETTING METHODS

"A" : Set bar splicer assembly by means of a template bolt.
"B" : Set bar splicer assembly by nailing to wood forms or cementing to steel forms.
(E) : Indicates epoxy coating.

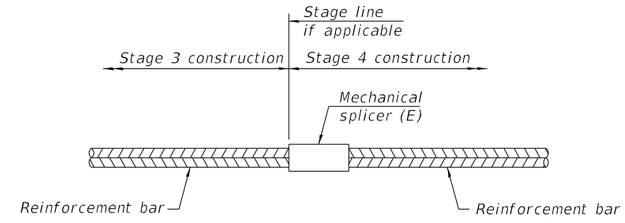


## STANDARD MECHANICAL SPLICER

| Location | Bar size | No. assemblies required |
|---|---|---|
| | | |
| | | |
| | | |
| | | |
| | | |

Notes:
Splicer bars shall be deformed with threaded ends and have a minimum 60 ksi yield strength.
All reinforcement shall be lapped and tied to the splicer bars.
Bar splicer assemblies shall be epoxy coated according to the requirements for reinforcement bars. See Section 508 of the Standard Specifications.
See approved list of bar splicer assemblies and mechanical splicers for alternatives.

Wang Engineering
wangeng@wangeng.com
1145 N Main Street
Lombard, IL 60148
Telephone: (630) 953-9928
Fax

# BORING LOG SB-1

**WEI Job No.: 790-96-01**

Client: TranSystems Corporation
Project: Wisconsin Central RR Bridge over N Aurora Road
Location: Naperville, DuPage County, IL

Datum: NGVD
Elevation: 719.20 ft
North: 1862931.22 ft
East: 1011923.11 ft
Station: 109+22
Offset: 42 RT

| Elevation (ft) | SOIL AND ROCK DESCRIPTION | Sample No. | SPT Values (blw/6 in) | Qu (tsf) | Moisture Content (%) |
|---|---|---|---|---|---|
| 718.94 | 4-inch thick, TOPSOIL --TOPSOIL-- | | | | |
| | Hard, dark brown CLAY --FILL-- --A-6-- | 1 | 4 5 7 | 4.25 P | 17 |
| 716.2 | Medium stiff to very stiff, brown and gray SILTY CLAY; wet --A-6-- | 2 | 2 3 3 | 1.00 P | 30 |
| | | 3 | 1 1 1 | 0.50 P | 30 |
| 711.2 | Hard, brown and gray CLAY --A-6-- | 4 | 4 5 7 | 4.00 B | 15 |
| | | 5 | 3 6 8 | 4.60 B | 18 |
| 706.2 | Very stiff to hard, gray CLAY --A-6-- | 6 | 3 5 7 | 4.20 B | 18 |
| | | 7 | 4 10 10 | 3.10 B | 16 |
| | | 8 | 6 9 10 | 6.00 P | 13 |
| | | 9 | 5 8 9 | NR | |
| | | 10 | 6 6 12 | 3.60 B | 9 |
| | | 11 | 5 8 9 | 3.50 B | 12 |
| | | 12 | 6 9 9 | 3.70 B | 11 |
| | | 13 | 3 7 9 | 5.50 B | 20 |
| | | 14 | 3 6 9 | 2.80 B | 22 |

**GENERAL NOTES**

Begin Drilling: 10-11-2017 Complete Drilling: 10-15-2017
Drilling Contractor: O'Brien & Associates, Inc. Drill Rig:
Driller: Logger: DR Checked by: DOB
Drilling Method: HSA to 10.0'; rotatory to completion, CME Automatic Hammer

**WATER LEVEL DATA**

While Drilling: NA
At Completion of Drilling: NA
Time After Drilling: NA
Depth to Water: NA

The stratification lines represent the approximate boundary between soil types; the actual transition may be gradual.

WANGENGINC 790960.GPJ WANGENG.GDT 1/14/19



Wang Engineering
wangeng@wangeng.com
1145 N Main Street
Lombard, IL 60148
Telephone: (630) 953-9928
Fax

# BORING LOG SB-1

**WEI Job No.: 790-96-01**

Client: TranSystems Corporation
Project: Wisconsin Central RR Bridge over N Aurora Road
Location: Naperville, DuPage County, IL

Datum: NGVD
Elevation: 719.20 ft
North: 1862931.22 ft
East: 1011923.11 ft
Station: 109+22
Offset: 42 RT

| Elevation (ft) | SOIL AND ROCK DESCRIPTION | Sample No. | SPT Values (blw/6 in) | Qu (tsf) | Moisture Content (%) |
|---|---|---|---|---|---|
| | gravel --A-6-- | | | | |
| 656.2 | Very dense, gray GRAVEL --A-1-a-- | 15 | 4 8 10 | 4.00 B | 20 |
| | | 16 | 4 7 12 | 3.50 B | 20 |
| 653.7 | Very dense, gray SAND, trace gravel --A-3-- | 17 | 4 7 12 | 3.30 B | 19 |
| 651.2 | BOULDER --driller's observation-- | 18 | 6 50/5 | 4.50 P | 15 |
| 649.7 | Hard, gray CLAY LOAM, some | 19 | 16 31 40 | NP | 7 |
| | | 20 | 50/5 | 6.00 P | 6 |
| | | 21 | 50 50/4 | NP | 13 |
| | | 22 | 40 50/4 | NP | 24 |

**GENERAL NOTES**

Begin Drilling: 10-11-2017 Complete Drilling: 10-15-2017
Drilling Contractor: O'Brien & Associates, Inc. Drill Rig:
Driller: Logger: DR Checked by: DOB
Drilling Method: HSA to 10.0'; rotatory to completion, CME Automatic Hammer

**WATER LEVEL DATA**

While Drilling: NA
At Completion of Drilling: NA
Time After Drilling: NA
Depth to Water: NA

The stratification lines represent the approximate boundary between soil types; the actual transition may be gradual.

WANGENGINC 790960.GPJ WANGENG.GDT 1/14/19



Wang Engineering
wangeng@wangeng.com
1145 N Main Street
Lombard, IL 60148
Telephone: (630) 953-9928
Fax

# BORING LOG SB-1

**WEI Job No.: 790-96-01**

Client: TranSystems Corporation
Project: Wisconsin Central RR Bridge over N Aurora Road
Location: Naperville, DuPage County, IL

Datum: NGVD
Elevation: 719.20 ft
North: 1862931.22 ft
East: 1011923.11 ft
Station: 109+22
Offset: 42 RT

| Elevation (ft) | SOIL AND ROCK DESCRIPTION | Sample No. | SPT Values (blw/6 in) | Qu (tsf) | Moisture Content (%) |
|---|---|---|---|---|---|
| 633.2 | Very dense, gray FRACTURED ROCK | 23 | 38 50/5 | NP | 21 |
| | | 24 | 50/3 | NP | 5 |
| 625.2 | Possible WEATHERED BEDROCK. --driller's observation-- | 25 | 50/2 | NP | 9 |
| 622.7 | SILURIAN SYSTEM NIAGARAN SERIES DOLOMITE, light gray with horizontal bedding, highly fractured with vertical fractures at 100.3' & 101.8' --Run #1: 96 to 105.5 feet-- --RECOVERY = 100%-- --RQD = 21%-- | CORE | | | |
| | --$Q_u$= 6681 psi-- | 26 | | | |
| 613.7 | Boring terminated at 105.50 ft | | | | |

**GENERAL NOTES**

Begin Drilling: 10-11-2017 Complete Drilling: 10-15-2017
Drilling Contractor: O'Brien & Associates, Inc. Drill Rig:
Driller: Logger: DR Checked by: DOB
Drilling Method: HSA to 10.0'; rotatory to completion, CME Automatic Hammer

**WATER LEVEL DATA**

While Drilling: NA
At Completion of Drilling: NA
Time After Drilling: NA
Depth to Water: NA

The stratification lines represent the approximate boundary between soil types; the actual transition may be gradual.

WANGENGINC 790960.GPJ WANGENG.GDT 1/14/19

6:08:44 PM
FILE NAME: Boring Logs 1

TRANSYSTEMS

| | | | |
|---|---|---|---|
| USER NAME = brvanderwal | DESIGNED - JRM | REVISED - | |
| | CHECKED - MDS | REVISED - | |
| PLOT SCALE = 0:2.0000 ':" / in. | DRAWN - MDG | REVISED - | |
| PLOT DATE = 1/25/2025 | CHECKED - JRM | REVISED - | |

**STATE OF ILLINOIS**
**DEPARTMENT OF TRANSPORTATION**

**BORING LOGS 1**
**STRUCTURE NO. 022-9948**

SHEET 41 OF 45 SHEETS

| F.A.U. RTE. | SECTION | COUNTY | TOTAL SHEETS | SHEET NO. |
|---|---|---|---|---|
| 1509 | 06-00133-00-BR | DUPAGE | 426 | 198 |

CONTRACT NO. 61G79

ILLINOIS | FED. AID PROJECT

Wang Engineering
wangeng@wangeng.com
1145 N Main Street
Lombard, IL 60148
Telephone: (630) 953-9928
Fax

# BORING LOG SB-2

**WEI Job No.: 790-96-01**

Client: TranSystems Corporation
Project: Wisconsin Central RR Bridge over N Aurora Road
Location: Naperville, DupPage County, IL

Datum: NGVD
Elevation: 716.00 ft
North: 1862999.97 ft
East: 1012040.30 ft
Station: 110+39
Offset: 27 LT

| Elevation (ft) | SOIL AND ROCK DESCRIPTION | Depth (ft) | Sample Type / recovery | Sample No. | SPT Values (blw/6 in) | Qu (tsf) | Moisture Content (%) |
|---|---|---|---|---|---|---|---|
| 715.8 | 3-inch thick, TOPSOIL --TOPSOIL-- | | | | | | |
| | GRAVEL (FILL) | | | | | | |
| 714.0 | Hard, brown SILTY CLAY LOAM --A-6-- | | | | | | |
| | | | | 1 | 5 4 4 | NP | 10 |
| | | 5 | | 2 | 3 3 4 | 4.60 B | 16 |
| 710.0 | Very stiff to hard, gray CLAY --A-6-- | | | | | | |
| | | | | 3 | 3 5 6 | 4.90 B | 14 |
| | | 10 | | 4 | 5 7 9 | 5.30 B | 16 |
| | | | | 5 | 4 6 10 | 3.30 B | 17 |
| | | 15 | | 6 | 6 7 9 | 2.40 B | 12 |
| | | | | 7 | 6 8 10 | 4.50 P | 11 |
| | | 20 | | 8 | 6 9 9 | 3.50 P | 14 |
| | | 25 | | 9 | 5 9 11 | | 15 |
| | | | | 10 | 6 6 8 | 2.40 B | 13 |
| | | | | 11 | 6 7 10 | 2.60 B | 11 |
| | | 30 | | 12 | 5 4 9 | 1.80 B | 15 |
| | | 35 | | 13 | 7 10 15 | 4.10 B | 17 |
| | | 40 | | 14 | 4 5 7 | 3.10 B | 20 |

**GENERAL NOTES**

Begin Drilling: 10-11-2007 Complete Drilling: 10-15-2007
Drilling Contractor: O'Brien & Associates, Inc. Drill Rig:
Driller: Logger: DR Checked by: DOB
Drilling Method: HSA to 10.0'; rotatory to completion, CME Automatic Hammer

**WATER LEVEL DATA**

While Drilling: NA
At Completion of Drilling: NA
Time After Drilling: NA
Depth to Water: NA
The stratification lines represent the approximate boundary between soil types; the actual transition may be gradual.

WANGENG: 790960.GPJ WANGENG.GDT 1/14/19



Wang Engineering
wangeng@wangeng.com
1145 N Main Street
Lombard, IL 60148
Telephone: (630) 953-9928
Fax

# BORING LOG SB-2

**WEI Job No.: 790-96-01**

Client: TranSystems Corporation
Project: Wisconsin Central RR Bridge over N Aurora Road
Location: Naperville, DupPage County, IL

Datum: NGVD
Elevation: 716.00 ft
North: 1862999.97 ft
East: 1012040.30 ft
Station: 110+39
Offset: 27 LT

| Elevation (ft) | SOIL AND ROCK DESCRIPTION | Depth (ft) | Sample Type / recovery | Sample No. | SPT Values (blw/6 in) | Qu (tsf) | Moisture Content (%) |
|---|---|---|---|---|---|---|---|
| | | 45 | | 15 | 5 7 9 | 1.50 P | 22 |
| | | 50 | | 16 | 3 7 9 | 3.50 P | 19 |
| | | 55 | | 17 | 5 6 9 | 3.10 B | 20 |
| 660.0 | Hard, gray CLAY LOAM, fractured rock --A-6-- | | | | | | |
| | | 60 | | 18 | 15 22 34 | 6.00 P | 8 |
| | | 65 | | 19 | 38 50/5 | 6.00 P | 7 |
| | | 70 | | 20 | 50/4 | 6.00 P | 9 |
| 645.0 | Very dense, gray SAND --A-3-- | | | | | | |
| | | 75 | | 21 | 41 50/5 | NP | 16 |
| | | 80 | | 22 | 35 50/5 | NP | 17 |

**GENERAL NOTES**

Begin Drilling: 10-11-2007 Complete Drilling: 10-15-2007
Drilling Contractor: O'Brien & Associates, Inc. Drill Rig:
Driller: Logger: DR Checked by: DOB
Drilling Method: HSA to 10.0'; rotatory to completion, CME Automatic Hammer

**WATER LEVEL DATA**

While Drilling: NA
At Completion of Drilling: NA
Time After Drilling: NA
Depth to Water: NA
The stratification lines represent the approximate boundary between soil types; the actual transition may be gradual.

WANGENG: 790960.GPJ WANGENG.GDT 1/14/19



Wang Engineering
wangeng@wangeng.com
1145 N Main Street
Lombard, IL 60148
Telephone: (630) 953-9928
Fax

# BORING LOG SB-2

**WEI Job No.: 790-96-01**

Client: TranSystems Corporation
Project: Wisconsin Central RR Bridge over N Aurora Road
Location: Naperville, DupPage County, IL

Datum: NGVD
Elevation: 716.00 ft
North: 1862999.97 ft
East: 1012040.30 ft
Station: 110+39
Offset: 27 LT

| Elevation (ft) | SOIL AND ROCK DESCRIPTION | Depth (ft) | Sample Type / recovery | Sample No. | SPT Values (blw/6 in) | Qu (tsf) | Moisture Content (%) |
|---|---|---|---|---|---|---|---|
| | | 85 | | 23 | 24 34 42 | NP | 18 |
| 627.5 | Granite COBBLES over WEATHERED BEDROCK, interbedded with clay --Run #1: 88.5 to 92.0 feet-- --RECOVERY = 100%-- | 90 | CORE | 24 | | | |
| 624.0 | Fractured WEATHERED ROCK | | | | | | |
| 623.5 | SILURIAN SYSTEM NIAGARAN SERIES DOLOMITE, light gray with horizontal bedding, highly fractured with vertical fracture at 95.8 feet --Run #2: 92.5 to 99.0 feet-- --RECOVERY = 100%-- --RQD = 24%-- --$Q_u$ = 10,056 psi-- | 95 | CORE | 25 | | | |
| | | | | 26 | | | |
| 617.0 | Boring terminated at 99.00 ft | 100 | | | | | |

**GENERAL NOTES**

Begin Drilling: 10-11-2007 Complete Drilling: 10-15-2007
Drilling Contractor: O'Brien & Associates, Inc. Drill Rig:
Driller: Logger: DR Checked by: DOB
Drilling Method: HSA to 10.0'; rotatory to completion, CME Automatic Hammer

**WATER LEVEL DATA**

While Drilling: NA
At Completion of Drilling: NA
Time After Drilling: NA
Depth to Water: NA
The stratification lines represent the approximate boundary between soil types; the actual transition may be gradual.

WANGENG: 790960.GPJ WANGENG.GDT 1/14/19

Wang Engineering
wangeng@wangeng.com
1145 N Main Street
Lombard, IL 60148
Telephone: (630) 953-9928
Fax

# BORING LOG BSB-01

**WEI Job No.: 790-96-01**

Client: **TranSystems Corporation**
Project: **Wisconsin Central RR Bridge over N Aurora Road**
Location: **Naperville, DuPage County, IL**

Datum: NAVD 88
Elevation: 717.65 ft
North: 1863047.84 ft
East: 1012038.61 ft
Station: 110+37.21
Offset: 74.87 LT

| Elevation (ft) | SOIL AND ROCK DESCRIPTION | Depth (ft) | Sample Type / recovery | Sample No. | SPT Values (blw/6 in) | Qu (tsf) | Moisture Content (%) |
|---|---|---|---|---|---|---|---|
| 716.9 | 9-inch thick, black SILTY CLAY LOAM | | | | | | |
| | --TOPSOIL-- | | | | | | |
| | Very stiff to hard, brown SILTY CLAY LOAM, trace gravel | | | 1 | 4 5 4 | 2.00 P | 15 |
| | --RDR=2-- | | | | | | |
| | --$L_L$(%) = 30, $P_I$(%) = 17-- --%Gravel = 2.7-- --%Sand = 14.9-- --%Silt = 61.7-- --%Clay = 20.6-- | 5 | | 2 | 4 6 7 | 3.44 B | 15 |
| | | | | 3 | 6 10 11 | 4.51 B | 15 |
| | --gray-- | 10 | | 4 | 6 8 10 | 6.23 B | 16 |
| | | | | 5 | 4 7 12 | 4.59 B | 19 |
| 704.6 | --RDR=3-- | | | | | | |
| | Very stiff to hard, gray CLAY LOAM --some sand and gravel; wet-- | 15 | | 6 | 4 8 6 | 3.00 P | 12 |
| | | | | 7 | 12 11 9 | 4.10 B | 12 |
| 699.6 | Very stiff to hard, gray SILTY CLAY to SILTY CLAY LOAM, trace gravel | 20 | | 8 | 8 9 10 | 4.51 B | 13 |
| | --sand and gravel, 23.5 to 28 feet-- | 25 | | 9 | 5 9 11 | 3.94 B | 15 |
| | | | | 10 | 16 12 14 | NR | |
| | | | | 11 | 11 14 14 | NR | 18 |
| | | 30 | | 12 | 11 12 17 | 1.50 P | 18 |
| | | 35 | | 13 | 7 11 15 | 5.74 B | 19 |
| | | 40 | | 14 | 8 9 11 | 2.00 P | 21 |

## GENERAL NOTES

Begin Drilling: **04-10-2017** Complete Drilling: **04-12-2017**
Drilling Contractor: **Wang Testing Services** Drill Rig:
Driller: **RR&RH** Logger: **M. Schmelzel** Checked by: **NSB**
Drilling Method: **3.25" IDA HSA; mud rotary 10' to termination; autohammer; backfilled with lean grout upon completion**

## WATER LEVEL DATA

While Drilling: **NA**
At Completion of Drilling: **NA**
Time After Drilling: **18 hours**
Depth to Water: **2 (Mud) ft**

The stratification lines represent the approximate boundary between soil types; the actual transition may be gradual.

WANGENGINC 790961.GPJ WANGENG.GDT 1/14/19



Wang Engineering
wangeng@wangeng.com
1145 N Main Street
Lombard, IL 60148
Telephone: (630) 953-9928
Fax

# BORING LOG BSB-01

**WEI Job No.: 790-96-01**

Client: **TranSystems Corporation**
Project: **Wisconsin Central RR Bridge over N Aurora Road**
Location: **Naperville, DuPage County, IL**

Datum: NAVD 88
Elevation: 717.65 ft
North: 1863047.84 ft
East: 1012038.61 ft
Station: 110+37.21
Offset: 74.87 LT

| Elevation (ft) | SOIL AND ROCK DESCRIPTION | Depth (ft) | Sample Type / recovery | Sample No. | SPT Values (blw/6 in) | Qu (tsf) | Moisture Content (%) |
|---|---|---|---|---|---|---|---|
| 675.6 | Medium stiff to stiff, gray SILTY CLAY LOAM, trace gravel | | | | | | |
| | --$L_L$(%) = 27, $P_I$(%) = 17-- --%Gravel = 5.0-- --%Sand = 8.5-- --%Silt = 65.4-- --%Clay = 21.1-- | 45 | | 15 | 5 6 6 | 0.57 B | 23 |
| | | 50 | | 16 | 6 7 8 | 1.00 P | 21 |
| | | 55 | | 17 | 8 11 12 | 1.50 P | 22 |
| 660.1 | --RDR=4-- | | | | | | |
| | Dense, light brown SANDY LOAM, little gravel; damp | 60 | | 18 | 15 16 20 | NP | 9 |
| 655.9 | Very dense, gray and brown LOAM, little gravel; damp | 65 | | 19 | 28 35 40 | NP | 8 |
| | | 70 | | 20 | 10 16 34 | NP | 9 |
| 645.9 | Very dense, gray, coarse SAND and GRAVEL; wet | 75 | | 21 | 70 | NP | 12 |
| 640.9 | --RDR=3-- | | | | | | |
| | Very dense, brown, fine SAND; saturated | 80 | | 22 | 45 65/4" | NP | 19 |

## GENERAL NOTES

Begin Drilling: **04-10-2017** Complete Drilling: **04-12-2017**
Drilling Contractor: **Wang Testing Services** Drill Rig:
Driller: **RR&RH** Logger: **M. Schmelzel** Checked by: **NSB**
Drilling Method: **3.25" IDA HSA; mud rotary 10' to termination; autohammer; backfilled with lean grout upon completion**

## WATER LEVEL DATA

While Drilling: **NA**
At Completion of Drilling: **NA**
Time After Drilling: **18 hours**
Depth to Water: **2 (Mud) ft**

The stratification lines represent the approximate boundary between soil types; the actual transition may be gradual.

WANGENGINC 790961.GPJ WANGENG.GDT 1/14/19



Wang Engineering
wangeng@wangeng.com
1145 N Main Street
Lombard, IL 60148
Telephone: (630) 953-9928
Fax

# BORING LOG BSB-01

**WEI Job No.: 790-96-01**

Client: **TranSystems Corporation**
Project: **Wisconsin Central RR Bridge over N Aurora Road**
Location: **Naperville, DuPage County, IL**

Datum: NAVD 88
Elevation: 717.65 ft
North: 1863047.84 ft
East: 1012038.61 ft
Station: 110+37.21
Offset: 74.87 LT

| Elevation (ft) | SOIL AND ROCK DESCRIPTION | Depth (ft) | Sample Type / recovery | Sample No. | SPT Values (blw/6 in) | Qu (tsf) | Moisture Content (%) |
|---|---|---|---|---|---|---|---|
| | --gray, fine to medium SAND, some gravel-- | 85 | | 23 | 45 55/5" | NP | 19 |
| | --RDR=4-- | | | | | | |
| | | 90 | | 24 | 25 50 | NP | 13 |
| 624.6 | Very dense, light gray GRAVEL with silt --WEATHERED BEDROCK-- | 95 | | 25 | 65 35/4" | NP | 7 |
| 620.1 | Strong, light gray, very poor rock quality, slightly weathered DOLOSTONE, with up to 2.5-inch spaced joints, horizontal and vertical joints, with greater than 0.2-inch joint opening, soft | 100 | CORE | | | | |
| | and hard infill, rough joint wall --Run 1: 97.5 to 103.5 feet-- --RECOVERY = 98%-- --RQD = 6%-- --$Q_u$ = 11.1 ksi-- | | 1 | | | | |
| | --Run 2: 103.5 to 111.5 feet-- --RECOVERY = 86%-- --RQD = 21%-- | 105 | 2 | CORE | | | |
| | | 110 | | | | | |
| 608.1 | Boring terminated at 111.50 ft | | | | | | |
| | | 115 | | | | | |
| | | 120 | | | | | |

## GENERAL NOTES

Begin Drilling: **04-10-2017** Complete Drilling: **04-12-2017**
Drilling Contractor: **Wang Testing Services** Drill Rig:
Driller: **RR&RH** Logger: **M. Schmelzel** Checked by: **NSB**
Drilling Method: **3.25" IDA HSA; mud rotary 10' to termination; autohammer; backfilled with lean grout upon completion**

## WATER LEVEL DATA

While Drilling: **NA**
At Completion of Drilling: **NA**
Time After Drilling: **18 hours**
Depth to Water: **2 (Mud) ft**

The stratification lines represent the approximate boundary between soil types; the actual transition may be gradual.

WANGENGINC 790961.GPJ WANGENG.GDT 1/14/19