HANDICAPPED PARKING SIGNS

THE SIGNS SHALL BE A R7-8 AND, WHERE APPLICABLE, R7-8P STANDARD SIGNS ADOPTED BY THE U.S. DEPARTMENT OF TRANSPORTATION, AS NEEDED.

THE SIGNS SHALL BE VERTICALLY MOUNTED ON A POST AT THE FRONT CENTER OF THE PARKING SPACE AND SET 3 FT.-5 FT. BEHIND THE BACK OF THE PARKING STALL MARKING AND 5 FT. FROM THE PAVEMENT TO THE BOTTOM OF THE SIGN.

THIS ITEM OF WORK SHALL BE PAID FOR UNDER ITEM:
AR910230 "HANDICAP SIGN" - 1 EACH

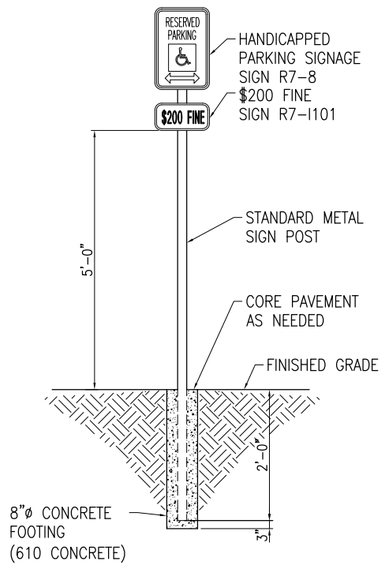

TYPICAL SIGNAGE DETAIL
NOT TO SCALE

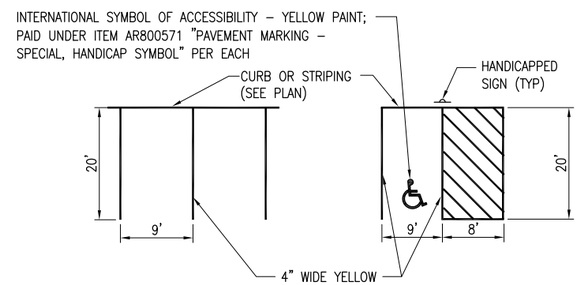

TYPICAL 9'x20' PARKING DETAIL
NOT TO SCALE

HANDICAP PARKING DETAIL
NOT TO SCALE

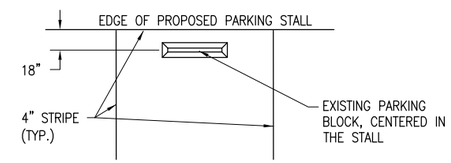

PARKING BLOCK LAYOUT
NOT TO SCALE

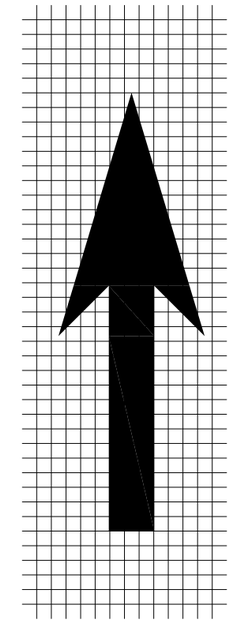

Legend Height	Arrow Size	a
6' (1.8 m)	Small	2.9 (74)
8' (2.4 m)	Large	3.8 (96)

IDOT STANDARD NO. 780001-03

STRAIGHT ARROW
NOT TO SCALE

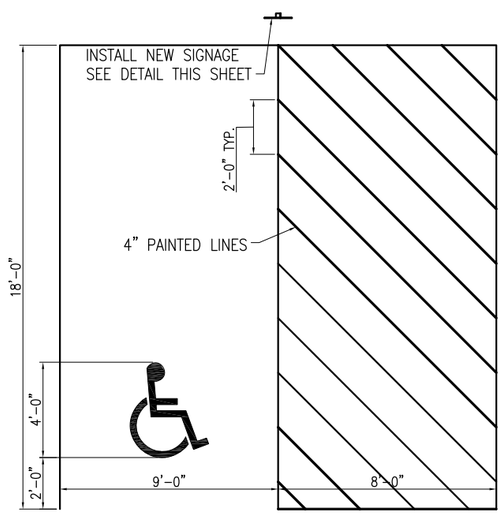

TYPICAL HANDICAPPED PARKING SPACE PAINT STRIPING
SCALE: NONE

NOTE: CENTER SYMBOL HORIZONTALLY IN STALL.

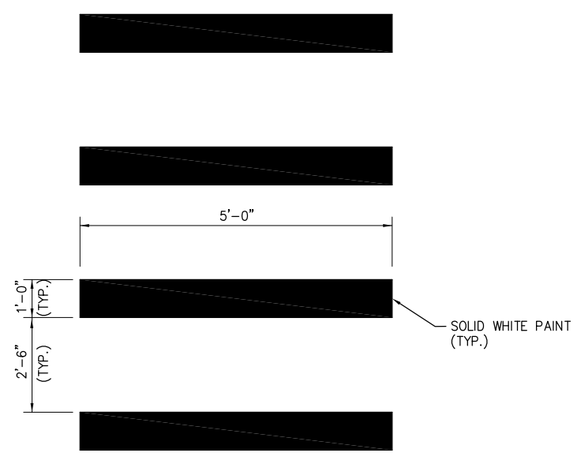

CROSSWALK PAINT LAYOUT
NOT TO SCALE

PAVEMENT MARKINGS - DIRECTIONAL ARROWS

1. THE PROPOSED DIRECTIONAL ARROW PAVEMENT MARKINGS SHALL BE LOCATED AS SHOWN ON THE PAVEMENT MARKING PLAN. LAYOUT OF ARROWS SHALL BE APPROVED BY RESIDENT ENGINEER AND OWNER PRIOR TO PAINTING.
2. ARROWS SHALL CONFORM TO IDOT STANDARD DRAWING NO. 780001 - SMALL ARROW, AND SHALL BE WHITE IN COLOR. IN ADDITION, A 4 IN. WIDE BLACK BORDER SHALL BE PAINTED AROUND THE ARROW.
3. THIS ITEM OF WORK SHALL BE PAID FOR UNDER THE FOLLOWING ITEM: AR800572 "PAVEMENT MARKING - SPECIAL, ARROW-STRAIGHT" - PER EA

REVISION	DATE

DECATUR AIRPORT
DECATUR, ILLINOIS
IL. PROJ.: DEC-4271

Hanson Proj. No. 13A0013
Filename C-551-DET.dwg
Scale NOT TO SCALE
Date 02/28/14

LAYOUT	BSS	02/07/14
DRAWN	JRH	02/10/14
REVIEWED	JDW	02/18/14

HANSON
©Copyright Hanson Professional Services Inc. 2014
Hanson Professional Services Inc.
1525 South Sixth Street
Springfield, Illinois 62703-2886
Ph: (217) 788-2450 Fax: (217) 788-2503
www.hanson-inc.com
Offices Nationwide

REHABILITATE TERMINAL AUTO PARKING LOT

PROPOSED MARKING DETAILS

MAR 14, 2014 12:23 PM STOLZ01547
pw:\\6fi-svr006\hansonprd\drk\hanson\Projects\Documents\13A0013\13A0013\13A0013\(380)\Airport\3Reel\c3\C5-E5SZZ\c34B