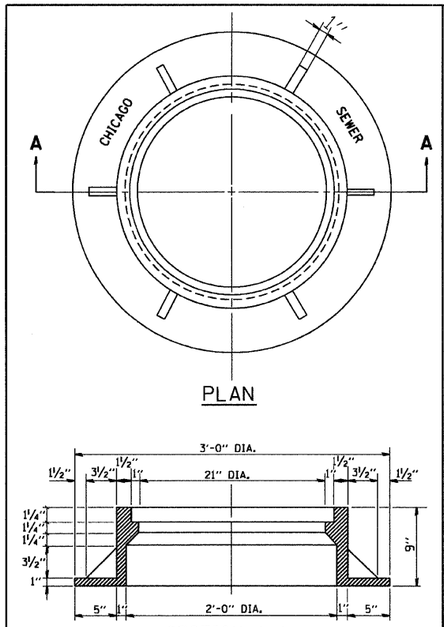

NOTE: METAL PLATES MUST BE FURNISHED FOR PERFORATED LIDS ON MANHOLES

CHICAGO STANDARD MANHOLE FRAME

SCALE: 1½"=1'-0"
MATERIAL: CAST IRON

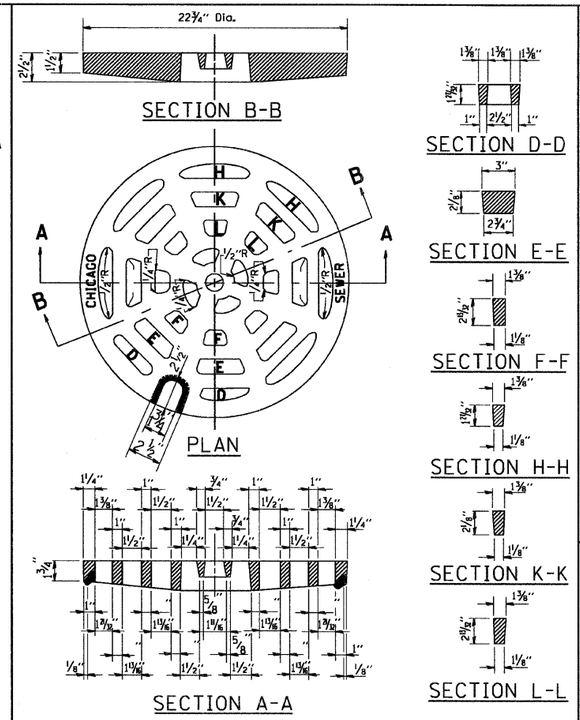

PERFORATED LID FOR CATCH BASINS & MANHOLES

SCALE: 2"=1'-0"
MATERIAL: CAST IRON

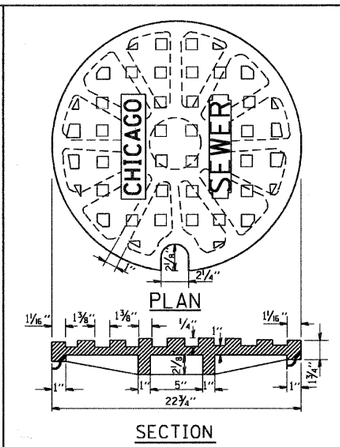

SOLID LID FOR MANHOLES

SCALE: NONE
MATERIAL: CAST IRON

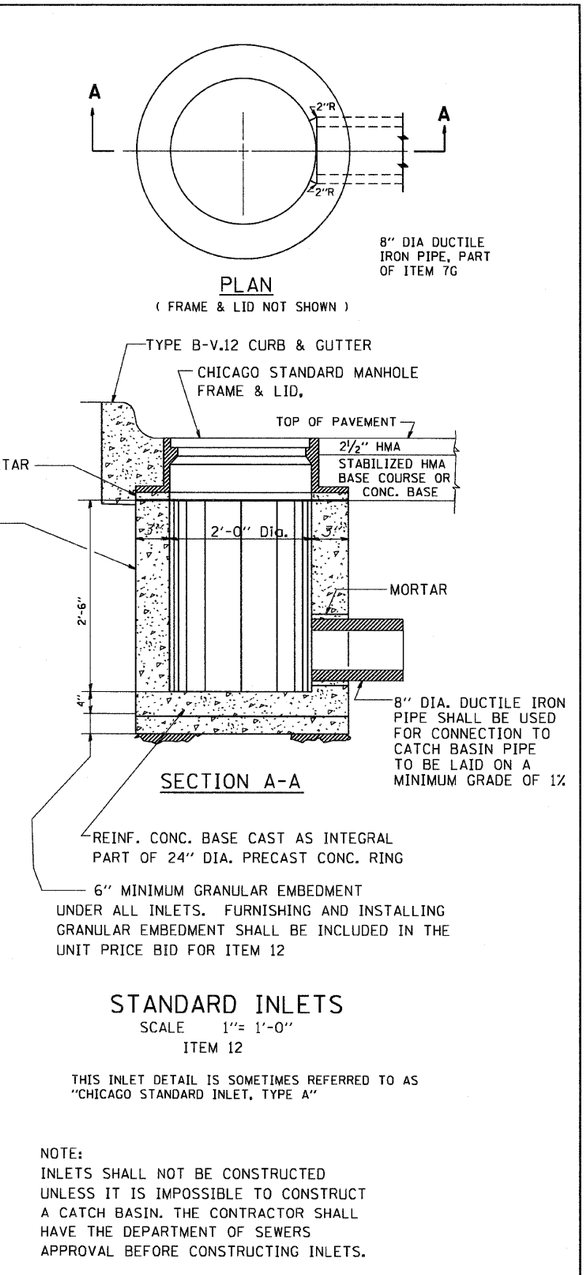

STANDARD INLETS

SCALE 1"= 1'-0"
ITEM 12

THIS INLET DETAIL IS SOMETIMES REFERRED TO AS "CHICAGO STANDARD INLET, TYPE A"

NOTE:
INLETS SHALL NOT BE CONSTRUCTED UNLESS IT IS IMPOSSIBLE TO CONSTRUCT A CATCH BASIN. THE CONTRACTOR SHALL HAVE THE DEPARTMENT OF SEWERS APPROVAL BEFORE CONSTRUCTING INLETS.

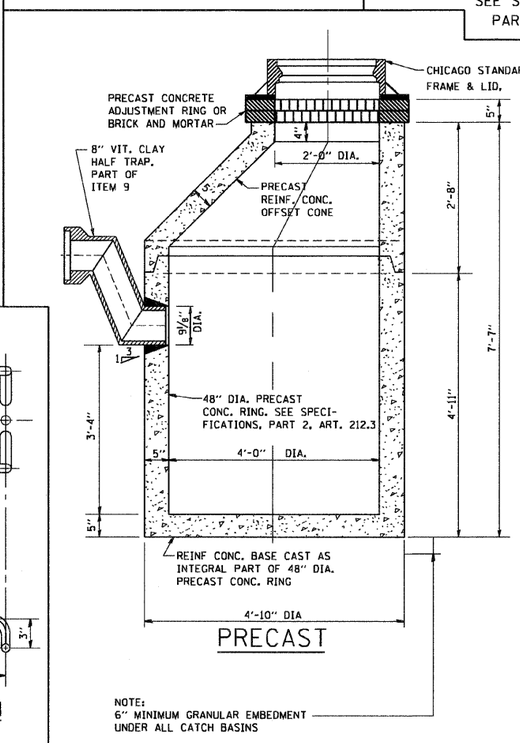

STANDARD CATCH BASINS

SCALE: ¾"= 1'-0"
ITEM 9

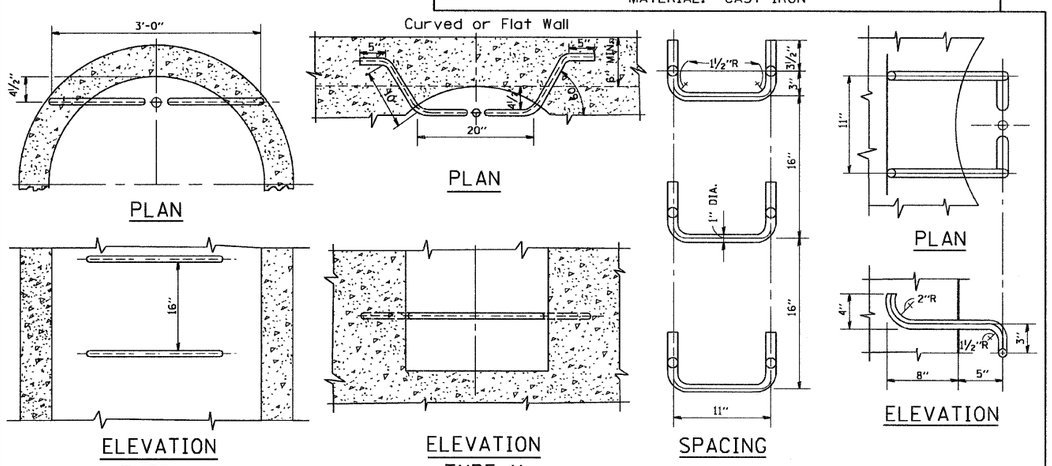

STANDARD LADDER RUNGS

ALL LADDER RUNGS SHALL BE ALUMINUM OR GALVANIZED WROUGHT IRON AS SPECIFIED IN THE SPECIFICATIONS, PART 2, ARTICLE 214.2. RUNGS SHALL BE 1" DIAMETER OR OF A SHAPE HAVING AN EQUIVALENT CROSS-SECTIONAL AREA.

CITY OF CHICAGO
DEPARTMENT OF SEWERS
ENGINEERING DIVISION

FILE NAME = Ws\diststd\22x34\bd47.dgn	USER NAME = gaglianobt	DESIGNED - M. GOMEZ	REVISED -
		DRAWN -	REVISED -
	PLOT SCALE = 50.0000 ' / IN.	CHECKED -	REVISED -
	PLOT DATE = 1/4/2008	DATE - 01-25-01	REVISED -

STATE OF ILLINOIS
DEPARTMENT OF TRANSPORTATION

CITY OF CHICAGO
CATCH BASIN, INLET AND MANHOLE DETAILS

SCALE: NONE | SHEET NO. 1 OF 1 SHEETS | STA. 12+17 | TO STA. 118+57

F.A.P. RTE.	SECTION	COUNTY	TOTAL SHEETS	SHEET NO.
350	2005-060 RS	COOK	30	20
	BD600-13 (BD47)	CONTRACT NO. 60A50		
FED. ROAD DIST. NO. 1	ILLINOIS	FED. AID PROJECT		