F.A.I. RTE.	SECTION	COUNTY	TOTAL SHEETS	SHEET NO.
57	*	**	76	9

CONTRACT NO. 70028
* (15,18-20)RS-2 & (15-22)RS-2
** COLES & CUMBERLAND

EXISTING TYPICAL CROSS SECTION

RAMP TYPICAL
RTE. 45 AT MATTOON

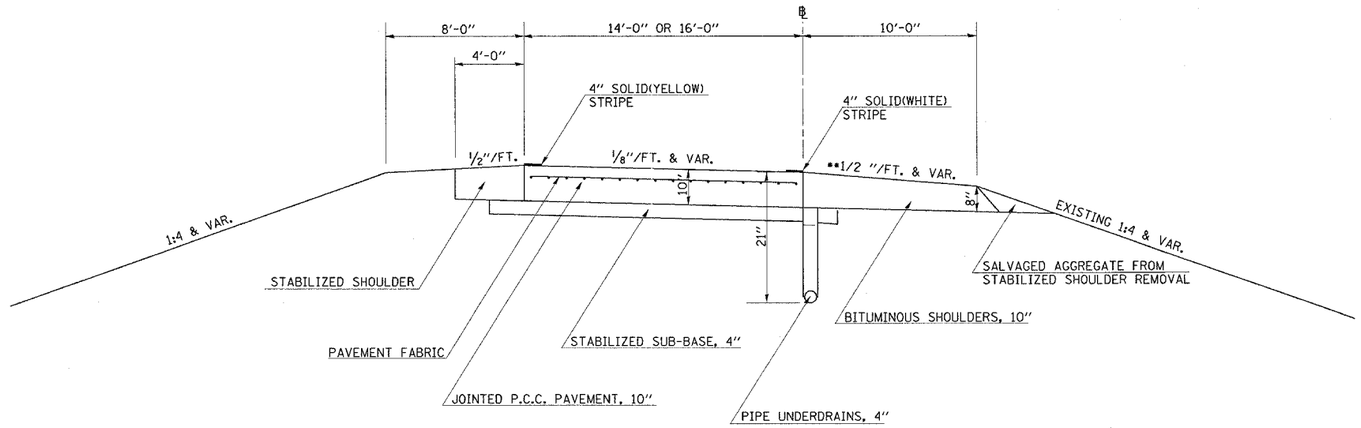

** FOR SECTIONS ON LOW SIDE OF SUPERELEVATION:
SLOPE SHOULDER SAME AS PAVEMENT, BUT NOT
LESS THAN 1/.2 "/FT.

EXISTING TYPICAL CROSS SECTION

RAMP TYPICAL
RTE. 45 AT NEOGA

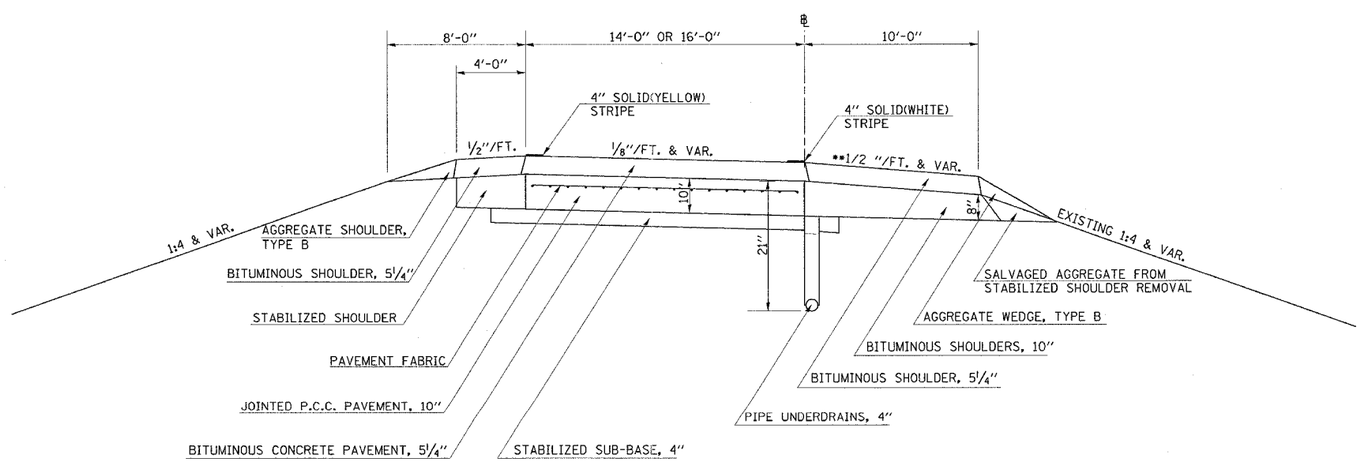

** FOR SECTIONS ON LOW SIDE OF SUPERELEVATION:
SLOPE SHOULDER SAME AS PAVEMENT, BUT NOT
LESS THAN 1/.2 "/FT.