STATE OF ILLINOIS
DEPARTMENT OF TRANSPORTATION

ROUTE NO.	SECTION	COUNTY	TOTAL SHEETS	SHEET NO.
F.A.P. 698	IVBR	BUREAU	72	34
FED. ROAD DIST. NO. 7	ILLINOIS	FED. AID PROJECT-		

SHEET NO. 7
24 SHEETS

Contract No. 66361

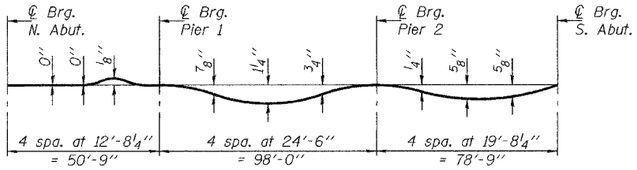

DEAD LOAD DEFLECTION DIAGRAM

(Includes weight of concrete only.)

Note: The above deflections are not to be used in the field if the engineer is working from the grade elevations adjusted for dead load deflections as shown on sheet 8 of 24.

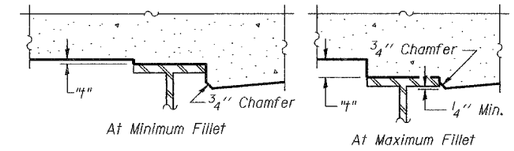

To determine "t": After all structural steel has been erected, elevations of the top flanges of the beams shall be taken at intervals shown below. These elevations subtracted from the "Theoretical Grade Elevations Adjusted for Dead Load Deflection" shown on sheet 8 of 24, minus slab thickness, equals the fillet heights "t" above top flange of beams.

FILLET HEIGHTS

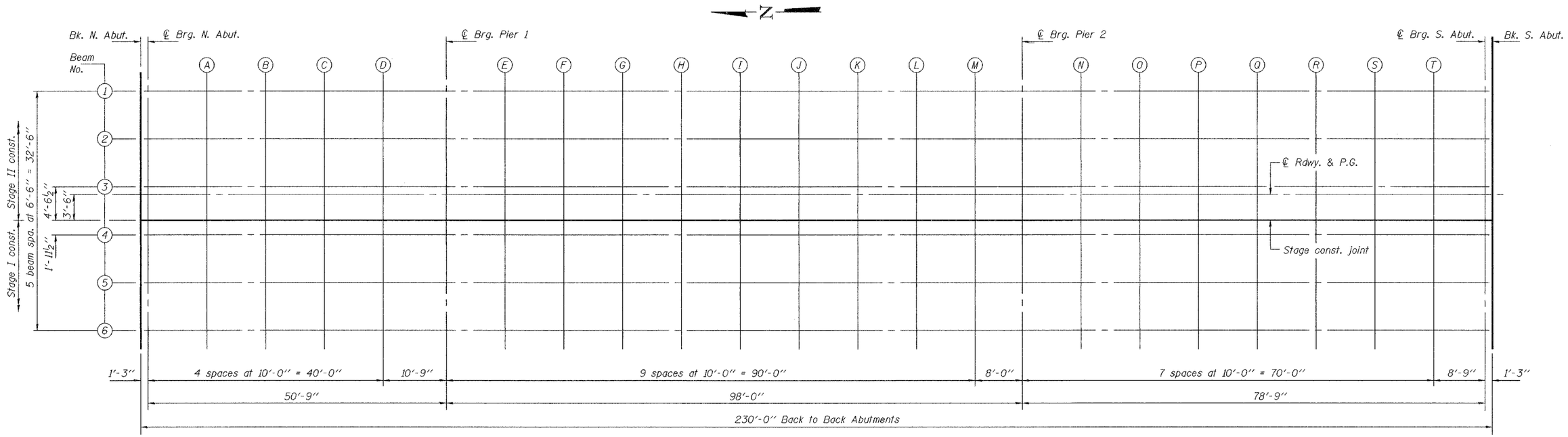

PLAN

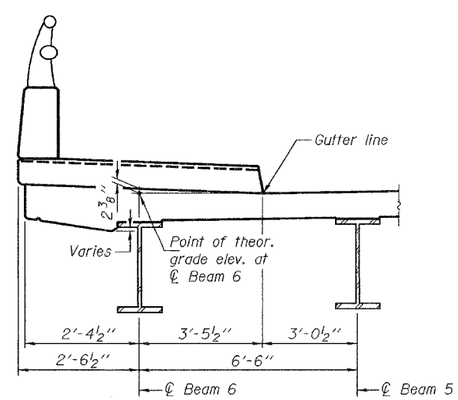

SECTION THRU SIDEWALK

(Looking North)

DESIGNED	RLT
CHECKED	PEC
DRAWN	h.t. duong
CHECKED	RLT/PEC

Jan 9, 2007
EXAMINED Thomas J. Domagalski
ENGINEER OF BRIDGE DESIGN
PASSED Ralph E. Anderson
ENGINEER OF BRIDGES AND STRUCTURES

TOP OF SLAB ELEVATIONS
F.A.P. RTE. 698 - SECTION IVBR
BUREAU COUNTY
STATION 32+32.00
STRUCTURE NO. 006-0164

\projects\Urb\00025\C066164.dgn 1/9/2007 9:24:40 AM