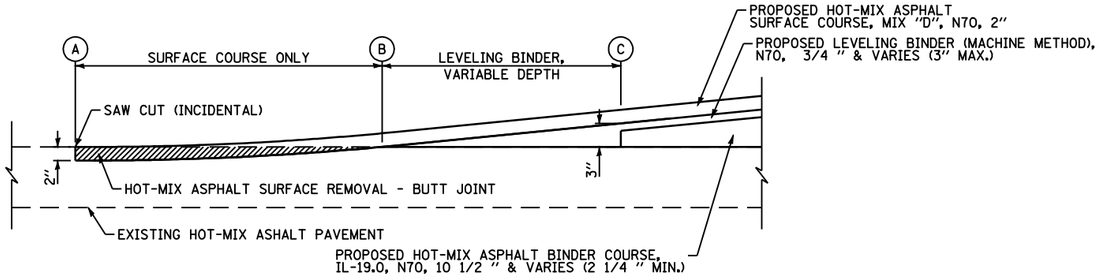

LOCATION	A	B	C
FAS 1597 (IL 96)	2194+85.00	2195+42.6	2195+90.8
FAU 7830 (IL 96)	2213+75.00	2213+36.9	2212+68.2

BUTT JOINT DETAIL

NOT TO SCALE

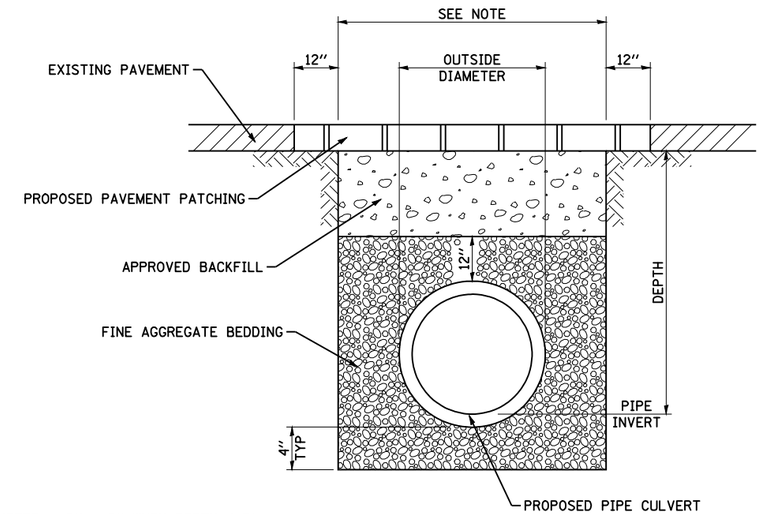

NOTE:
WIDTH = OUTSIDE DIAMETER + 9" + 9" WHEN DEPTH < 5'
WIDTH = OUTSIDE DIAMETER + 18" + 18" WHEN DEPTH > 5'

DETAIL OF TRENCH EXCAVATION, PAVEMENT REMOVAL, PAVEMENT PATCHING, AND BACKFILL UNDER EXISTING PAVEMENT

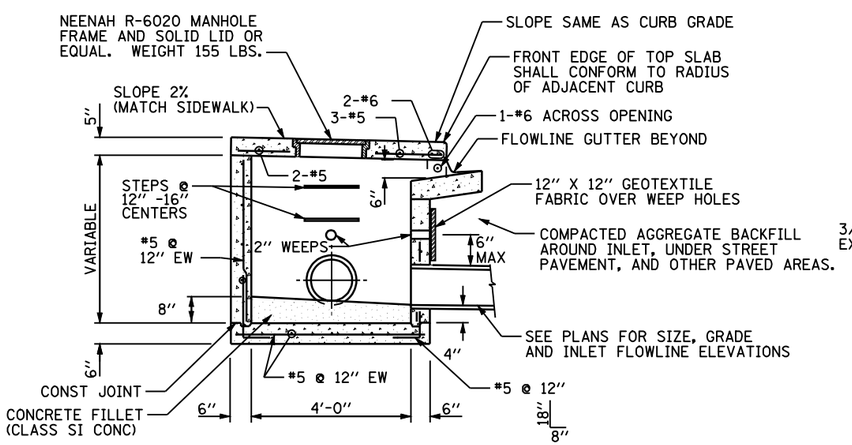

SECTION A-A

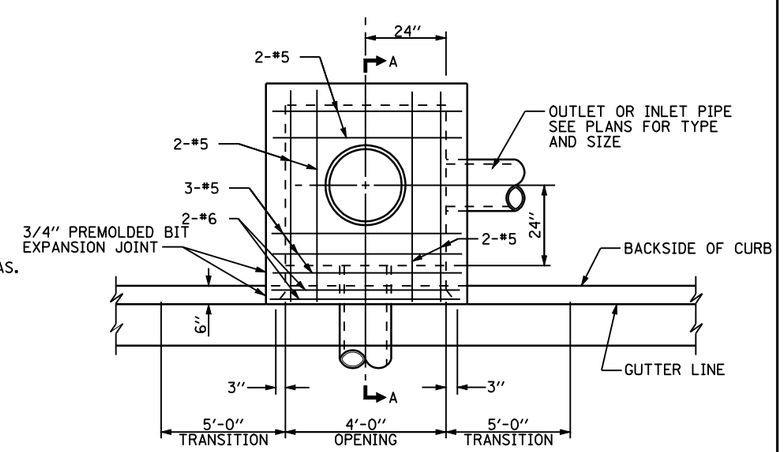

PLAN

INLET, SPECIAL, TYPE E

NOT TO SCALE

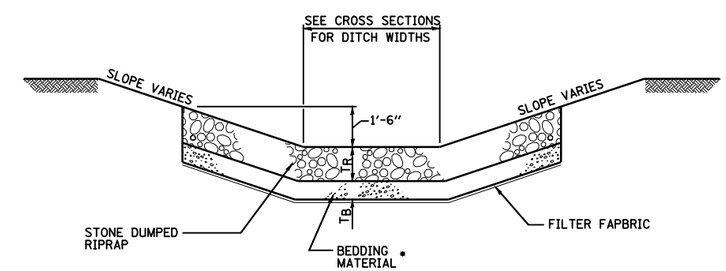

RIPRAP CLASS	RIPRAP THICKNESS (T_R)	BEDDING THICKNESS (T_B)
B3	12"	•
A4	16"	6"
A5	22"	8"
A6	26"	10"

• STONE DUMP RIPRAP CLASS B-3 HAS NO BEDDING MATERIAL OR FILTER FABRIC UNLESS IN SANDY SOILS.

TYPICAL STONE RIPRAP DITCH LINING

SEE SCHEDULE FOR INSTALLATION LOCATIONS

FILE NAME = c:\pw_work\PWIDOT\LAUGHLINRL\d0114681\073MiscDet04.dgn	USER NAME = laughlinrl	DESIGNED -	REVISED -
		DRAWN -	REVISED -
	PLOT SCALE = 40.0000 ' / IN.	CHECKED -	REVISED -
	PLOT DATE = Dec-12-2008 02:59:26PM	DATE -	REVISED -

STATE OF ILLINOIS
DEPARTMENT OF TRANSPORTATION

MISCELLANEOUS DETAILS

SCALE: NONE | SHEET NO. 1 OF 1 SHEETS | STA. | TO STA.

F.A. RTE.	SECTION	COUNTY	TOTAL SHEETS	SHEET NO.
•	(11)N	ADAMS	117	73
• - FAS 1597 & FAU 7830		CONTRACT NO. 72817		
FED. ROAD DIST. NO.	ILLINOIS	FED. AID PROJECT		