3-6-09 Letting, Item 132

F.A.I RTE.	SECTION	COUNTY	TOTAL SHEETS	SHEET NO.
74	48(27RS-3; (27HB-5)I, I-1)	KNOX	104	1
FED. ROAD DIST. NO.	ILLINOIS	CONTRACT NO. 68062		

PROJECT ENGINEER: C. MAUSHARD (309) 671-3453

PROJECT DESIGNER: M. MOHAMED /J. TORO-RODRIGUEZ (309) 671-3462

INDEX OF SHEETS

1. COVER SHEET
2–3. GENERAL NOTES & COMMITMENTS
4–8. SUMMARY OF QUANTITIES
9–13. TYPICAL SECTIONS
14–19. SCHEDULE OF QUANTITES
20. LINE DIAGRAM
21–24. RAMP CONFIGURATION AND DETAILS
25. MEDIAN TURNAROUND DETAIL
26. TRAFFIC CONTROL PLAN
27–34. TEMPORARY CROSSOVER DETAIL
35. EROSION CONTROL PLAN
36–39. BRIDGE APPROACH PAVEMENT DETAIL
40–57. STRUCTURE PLANS
58–89. CROSS SECTIONS
90–104. CADD STANDARDS
HIGHWAY STANDARDS

HIGHWAY STANDARDS

000001-05 631011-05 701400-03 704001-05
280001-04 631031-07 701401-05 780001-02
442001-04 635006-03 701406-05 781001-03
442101-07 635011-02 701411-05 BLR-22-4
515001-03 642001-01 701416-06
601001-03 664001-02 701426-03
601101-01
630001-08 701006-03 701901-01

PROJECT DESCRIPTION

WORK FOR THIS PROJECT CONSISTS OF PATCHING, MILLING AND RESURFACING ON I–74 EAST OF CH–9 (HENDERSON RD.) TO EAST OF IL–97, INCLUDING DECK REPLACEMENT TO STRUCTURES (SN 048–0011 & SN 048–0012) OVER TR–205 (KNOX STATION RD.) AND OTHER COLLATERAL WORK.

TRAFFIC INFORMATION

ADT = 16,800 (2007)

MU = 23.8%

SU = 4.2%

CATALOG NO. 032224–00D
CONTRACT NO. 68062

J.U.L.I.E.
JOINT UTILITY LOCATION INFORMATION FOR EXCAVATION
1–800–892–0123
OR 811

STATE OF ILLINOIS
DEPARTMENT OF TRANSPORTATION
DIVISION OF HIGHWAYS

PROPOSED
HIGHWAY PLANS

FAI ROUTE 74 (I–74)
SECTION 48(27RS–3; (27HB–5)I, I–1)
PROJECT IM-074-2(126)048
KNOX COUNTY
C–94–059–00

IMPROVEMENT BEGINS
EB – STA. 513+62.00
WB – STA. 518+07.10

BRIDGE IMPROVEMENT
STA. 570+08.84

IMPROVEMENT ENDS
EB – STA. 649+77.40
WB – STA. 650+00.00

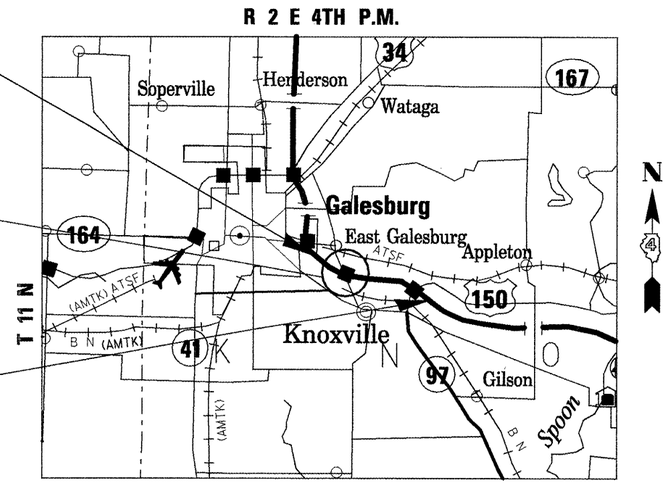

N.P.D.E.S. PERMIT REQUIRED

GROSS LENGTH = 13,615.4 FT. = 2.58 MILE
NET LENGTH = 13,615.4 FT. = 2.58 MILE

D–94–048–00

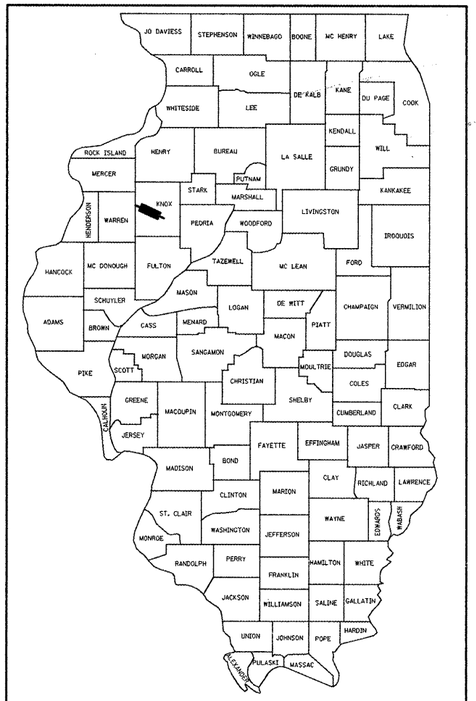

LOCATION OF SECTION INDICATED THUS: –

STATE OF ILLINOIS
DEPARTMENT OF TRANSPORTATION
DIVISION OF HIGHWAYS

SUBMITTED Dec 15 20 08

DEPUTY DIRECTOR OF HIGHWAYS, REGION ENGINEER

January 30 20 09
Charles E. Ingersoll
ENGINEER OF DESIGN AND ENVIRONMENT

January 30 20 09
Christine M. Reed
DIRECTOR OF HIGHWAYS, CHIEF ENGINEER

PRINTED BY THE AUTHORITY OF THE STATE OF ILLINOIS

COMMITMENTS

NO COMMITMENTS HAVE BEEN MADE ON THIS PROJECT.

JOB SPECIFIC NOTES

PAVEMENT OVERLAY UNDER STRUCTURES SPECIAL TREATMENT

* THIS WORK WILL BE DONE UNDER STRUCTURE NUMBER 048-0030, LOCATED AT STA. 636+30.
* THE ADDITIONAL MILLING AT TAPERS AND BENEATH THE STRUCTURE WILL BE INCLUDED IN THE COST FOR HOT-MIX ASPHALT SURFACE REMOVAL - 1 1/2".

HOT-MIX ASPHALT SURFACE REMOVAL - VARIABLE DEPTH

* THIS WORK WILL BE DONE AT THE GORE AREAS BY THE RAMPS AND ITS COST WILL BE INCLUDED IN THE COST FOR HOT-MIX ASPHALT SURFACE REMOVAL - 1 1/2'.
* THE MILLING BEGINS AT 1 1/2" IN THE GORE FLOW LINE AND INCREASE GRADUALLY TO 3" AT THE EDGE OF THE RAMP. FOR MORE SETAILS SEE TYPICAL SECTION.

EARTH EXCAVATION (ROCKFILL)

* THIS WORK SHALL INCLUDE THE REMOVAL OF ALL SUB-BASE GRANULAR MATERIAL, ALL POROUS GRANULAR EMBANKMENT AND ALL ROCKFILL BENEATH THE TEMPORARY CROSS-OVER.

GENERAL NOTES

AVAILABILITY OF ELECTRONIC FILES

MICRO STATION AND GEOPAK FILES OF THIS PROJECT WILL BE MADE AVAILABLE TO THE CONTRACTOR. IF THERE IS A CONFLICT BETWEEN THE ELECTRONIC FILES AND THE PRINTED CONTRACT PLANS AND DOCUMENTS, THE PRINTED CONTRACT PLANS AND DOCUMENTS SHALL TAKE PRECEDENCE OVER THE ELECTRONIC FILES. THE CONTRACTOR SHALL ACCEPT ALL RISK ASSOCIATED WITH USING THE ELECTRONIC FILES AND SHALL HOLD THE DEPARTMENT HARMLESS FOR ANY ERRORS OR OMISSIONS IN THE ELECTRONIC FILES AND THE DATA CONTAINED THEREIN. ERRORS OR DELAYS RESULTING FROM THE USE OF THE ELECTRONIC FILES BY THE CONTRACTOR SHALL NOT RESULT IN AN EXTENSION OF TIME FOR ANY INTERIM OR FINAL COMPLETION DATE OR SHALL NOT BE CONSIDERED CAUSE FOR ADDITIONAL COMPENSATION. THE CONTRACTOR SHALL NOT USE, SHARE, OR DISTRIBUTE THESE ELECTRONIC FILES EXCEPT FOR THE PURPOSE OF CONSTRUCTING THIS CONTRACT. ANY CLAIMS BY THIRD PARTIES DUE TO USE OR ERRORS SHALL BE THE RESPONSIBILITY OF THE CONTRACTOR. THE CONTRACTOR SHALL INCLUDE THIS DISCLAIMER WITH THE TRANSFER OF THESE ELECTRONIC FILES TO ANY OTHER PARTIES AND SHALL INCLUDE APPROPRIATE LANGUAGE BINDING THEM TO SIMILAR RESPONSIBILITIES.

CRITICAL PATH WORK SCHEDULE REQUIREMENT

THE CONTRACTOR WILL SUBMIT TO THE ENGINEER A SATISFACTORY PROGRESS SCHEDULE AND CRITICAL PATH SCHEDULE WHICH SHALL SHOW THE PROPOSED SEQUENCE OF WORK AT THE TIME OF THE PRE-CONSTRUCTION CONFERENCE.

WINTER SHUTDOWN RESTRICTIONS ON COLD MILLED PROJECTS

PRIOR TO WINTER SHUTDOWN THE FOLLOWING STEPS SHALL BE TAKEN:

* ALL COLD MILLED SURFACES SHALL BE OVERLAID.
* ALL LANES SHALL BE REOPENED TO TRAFFIC.
* MANHOLES, WHERE APPLICABLE, SHALL BE ADJUSTED TO THE ELEVATION OF THE BINDER COURSE/LEVELING BINDER TO EASE IN PLOWING SNOW, AND RE-ADJUSTED TO FINISHED GRADE IN THE SPRING. THE INITIAL MANHOLE ADJUSTMENT WILL BE PAID FOR AT THE CONTRACT UNIT PRICE AND ANY RE-ADJUSTMENT, AS DIRECTED BY THE ENGINEER, WILL BE PAID FOR IN ACCORDANCE WITH ARTICLE 109.04.
* TEMPORARY OR PERMANENT PAVEMENT MARKING SHALL BE PLACED AS APPLICABLE.

ENVIRONMENTAL REVIEWS

PRIOR TO THE USE OF ANY PROPOSED BORROW AREAS, USE AREAS (TEMPORARY ACCESS ROADS, DETOURS, RUN-AROUNDS, ETC.) AND/OR WASTE AREAS, THE CONTRACTOR SHALL FILE THE REQUIRED ENVIRONMENTAL RESOURCE REQUEST SURVEYS ACCORDING TO SECTION 107.22 OF THE STANDARD SPECIFICATIONS. THESE SURVEYS ARE REQUIRED IN ORDER FOR THE DEPARTMENT TO CONDUCT CULTURAL AND BIOLOGICAL RESOURCE SURVEYS FOR THE PROPOSED SITE.

PRIOR TO ANY WASTE MATERIALS BEING REMOVED FROM THE CONSTRUCTION SITE THE REQUIRED ENVIRONMENTAL RESOURCE SURVEYS WILL NEED TO BE OBTAINED AND FILED BY THE CONTRACTOR. EXCESS WASTE PRODUCTS REMOVED FROM THE CONSTRUCTION SITE SHALL BE DISPOSED OF AS REQUIRED IN SECTION 202.03 OF THE STANDARD SPECIFICATIONS.

ANY PROTRUDING METAL BARS SHALL BE REMOVED PRIOR TO THE DISPOSAL OF BROKEN CONCRETE AT APPROVED DISPOSAL SITES.

THE REQUIRED ENVIRONMENTAL RESOURCE DOCUMENTATION SHALL INCLUDE THE FOLLOWING:

* BDE FORM 2289 (ENVIRONMENTAL SURVEY REQUEST)
* A LOCATION MAP SHOWING THE SIZE LIMITS AND LOCATION OF THE USE AREA
* SIGNED PROPERTY OWNER AGREEMENT FORM-D4 PI0100
* COLOR PHOTOGRAPHS DEPICTING THE USE AREA
* BORROW AREA ENTRY AGREEMENT FORM-D4 PI0101

PLEASE NOTE THAT A MINIMUM OF TWO WEEKS SHALL BE ALLOWED FOR THE DISTRICT TO OBTAIN THE REQUIRED ENVIRONMENTAL CLEARANCES.

PAVEMENT STATIONING NUMBERS & PLACEMENT

THE CONTRACTOR SHALL PROVIDE LABOR AND MATERIALS REQUIRED TO IMPRINT PAVEMENT STATION NUMBERS IN THE FINISHED SURFACE OF THE PAVEMENT AND/OR OVERLAY. THE NUMBERS SHALL BE APPROXIMATELY 3/4 INCH (20mm) WIDE, 5 INCHES (125mm) HIGH AND 5/8 INCH (15mm) DEEP.

THE PAVEMENT STATION NUMBERS SHALL BE INSTALLED AS SPECIFIED HEREIN:

INTERVAL – 200 FEET (ENGLISH STATIONING) OR 100 METERS (METRIC STATIONING)

BOTTOM OF NUMBERS – 6 INCHES (150mm) FROM THE INSIDE EDGE OF THE PAVEMENT MARKING

LOCATION:
* 2, 3 & 5 LANE PAVEMENTS – RIGHT EDGE OF PAVEMENT IN DIRECTION OF INCREASING STATIONS
* MULTI-LANE DIVIDED ROADWAYS – OUTSIDE EDGE OF PAVEMENT IN BOTH DIRECTIONS
* RAMPS – ALONG BASELINE EDGE OF PAVEMENT

POSITION – STATIONS SHALL BE PLACE SO THEY CAN BE READ FROM THE ADJACENT SHOULDER

FORMAT – ENGLISH (METRIC) PAVEMENT STATIONS SHALL USE THIS FORMAT "XXX (XX+X00)" WHERE X REPRESENTS THE PAVEMENT STATION

THIS WORK WILL NOT BE PAID FOR SEPARATELY, BUT WILL BE CONSIDERED INCLUDED IN THE COST OF ASSOCIATED PAVEMENT AND/OR OVERLAY PAY ITEMS.

HOT-MIX ASPHALT MIXTURE REQUIREMENTS

MIXTURE USE(S):	SURFACE COURSE (MAINLINE, MEDIAN TURNAROUND, CROSSOVER, RAMPS)	BINDER COURSE (MAINLINE, MEDIAN TURNAROUND, CROSSOVER)	LEVELING BINDER (RAMPS)	BITUMINOUS SHOULDER (TOP LIFT)	BITUMINOUS SHOULDER (BOTTOM LIFT & HOT-MIX ASPHALT BASE CSE 8")
AC/PC:	SBS OR SBR 76-22	SBS OR SBR 76-22	SBS OR SBR 70-22	PG 64-22	PG 64-22
RAP % (MAX)**:	10%	10%	0%	15%	25%
DESIGN AIR VOIDS:	4.0% @ N=90	4.0% @ N=90	2.5% @ N=50	3.0% @ N=50	4.0% @ N=50
MIXTURE COMPOSITION: (GRADATION MIXTURE)	IL 9.5 OR IL 12.5	IL 19.0	IL 4.75	IL 9.5 OR IL 12.5	IL 19.0
FRICTION AGGREGATE	MIXTURE E	N.A.	N.A.	MIXTURE C	N.A.

** IF RAP OPTION IS SELECTED, THE ASPHALT CEMENT GRADE MAY NEED TO BE ADJUSTED; THIS WILL BE DETERMINED BY THE ENGINEER.

NOTE: PROPOSED HOT-MIX ASPHALT PAVEMENT (FULL-DEPTH), 10" SHALL CONSIST OF 2" OF HOT-MIX ASPHALT SURFACE COURSE, MIX E, IL 9.5 OR IL 12.5, N90 OVER 8" OF HOT-MIX ASPHALT BINDER COURSE, IL 19.0, N90.

MINIMUM VERTICAL CLEARANCE

THE CONTRACTOR SHALL VERIFY THE EXISTING STRUCTURE VERTICAL CLERANCE PRIOR TO PLACING BITUMINOUS OVERLAY UNDER ANY STRUCTURE. A MINIMUM 14'-00" VERTICAL CLEARANCE SHALL BE MAINTAINED UNDER S.N. 048-0012 AND 14'-8" UNDER S.N. 048-0011.

BUTT JOINT CUTTING TIME RESTRICTION

BUTT JOINTS SHALL NOT BE MILLED MORE THAN THREE DAYS PRIOR TO PLACEMENT OF THE BITUMINOUS SURFACE COURSE.

PAVING SURFACE COURSE

CONTINOUS PAVING OPERATIONS ON THE MAIN ROADWAY SHALL BE MAINTAINED AT ALL TIMES DURING THE CONSTRUCTION OF THE HOT-MIX ASPHALT SURFACE. NO INTERRUPTIONS FOR SIDE ROADS, ENTRANCES, TURN LANES, ETC. WILL BE ALLOWED.

NAME PLATE RELOCATION ON METAL PLATE BRIDGE RAIL

NAME PLATES THAT WILL BE REMOVED AS A RESULT OF THIS WORK SHALL BE RELOCATED ON THE METAL PLATE, BRIDGE RAIL OR CONCRETE PARAPET WALL AS DIRECTED BY THE ENGINEER. THE COST OF REMOVING AND REPLACING THE NAME PLATES, INCLUDING ALL NECESSARY FASTENERS, WILL NOT BE MEASURED OR PAID FOR SEPARATELY BUT WILL BE CONSIDER INCIDENTAL TO THE CONTRACT.

ENGINEERS FIELD OFFICE

ADD THE FOLLOWING SENTENCE TO THE END OF PARAGRAPH 670.02 (i) AND 670.04 (e): ALL OF THE TELEPHONE LINES PROVIDED SHALL HAVE UNPUBLISHED NUMBERS.

		SUMMARY OF QUANTITIES		URBAN ← 90% FED. 10% STATE →				
	CODE NO.	PAY ITEM	UNIT	TOTAL QUANTITY	I000-2A	SFTY - 2A	Y080	
	20200100	EARTH EXCAVATION	CU YD	7,162	7,162			
	20400800	FURNISHED EXCAVATION	CU YD	5,011	5,011			
	20700110	POROUS GRANULAR EMBANKMENT	TON	2,023	2,023			
	20700400	POROUS GRANULAR EMBANKMENT, SPECIAL	CU YD	124		124		
	21001000	GEOTECHNICAL FABRIC FOR GROUND STABILIZATION	SQ YD	4,733	4,733			
	21101615	TOPSOIL FURNISH AND PLACE, 4"	SQ YD	11,243	11,243			
	21400100	GRADING AND SHAPING DITCHES	FOOT	363	363			
*	25000210	SEEDING, CLASS 2A	ACRE	2.75	2.75			
*	25000400	NITROGEN FERTILIZER NUTRIENT	POUND	249	249			
*	25000500	PHOSPHORUS FERTILIZER NUTRIENT	POUND	249	249			
*	25000600	POTASSIUM FERTILIZER NUTRIENT	POUND	249	249			
*	25100105	MULCH, METHOD 1	ACRE	0.5	0.5			
*	25100630	EROSION CONTROL BLANKET	SQ YD	11,243	11,243			
	28000250	TEMPORARY EROSION CONTROL SEEDING	POUND	245	245			
	28000300	TEMPORARY DITCH CHECKS	EACH	60	60			
	28000400	PERIMETER EROSION BARRIER	FOOT	3,291	3,291			
	28000500	INLET AND PIPE PROTECTION	EACH	3	3			
	31101200	SUB-BASE GRANULAR MATERIAL, TYPE B 4"	SQ YD	1,186	1,186			
	35501316	HOT-MIX ASPHALT BASE COURSE, 8"	SQ YD	2,455	2,455			
	40600215	POLYMERIZED BITUMINOUS MATERIALS (PRIME COAT)	TON	69	69			
	40600300	AGGREGATE (PRIME COAT)	TON	377	377			
	40600895	CONSTRUCTING TEST STRIP	EACH	2	2			
	40600982	HOT-MIX ASPHALT SURFACE REMOVAL - BUTT JOINT	SQ YD	1,387	1,387			
	40600990	TEMPORARY RAMP	SQ YD	142	142			
	40603240	POLYMERIZED HOT-MIX ASPHALT BINDER COURSE, IL-19.0, N90	TON	9,037	9,037			

* SPECIALTY ITEM

	SUMMARY OF QUANTITIES			URBAN 90% FED. 10% STATE				
	CODE NO.	PAY ITEM	UNIT	TOTAL QUANTITY	I000-2A	SFTY - 2A	Y080	
	40603570	POLYMERIZED HOT-MIX ASPHALT SURFACE COURSE, MIX "E", N90	TON	6,755	6,755			
	40701881	HOT-MIX ASPHALT PAVEMENT (FULL-DEPTH), 10"	SQ YD	4,269	4,269			
	42001165	BRIDGE APPROACH PAVEMENT	SQ YD	558	558			
	42001200	PAVEMENT FABRIC	SQ YD	147	147			
	42001300	PROTECTIVE COAT	SQ YD	2,301	558	1,743		
	42001430	BRIDGE APPROACH PAVEMENT CONNECTOR (FLEXIBLE)	SQ YD	112	112			
	44000100	PAVEMENT REMOVAL	SQ YD	4,269	4,269			
	44000155	HOT-MIX ASPHALT SURFACE REMOVAL, 1 1/2"	SQ YD	124,563	124,563			
	44004250	PAVED SHOULDER REMOVAL	SQ YD	315	315			
	44200577	CLASS A PATCHES, TYPE II, 12 INCH	SQ YD	653	653			
	44200581	CLASS A PATCHES, TYPE III, 12 INCH	SQ YD	238	238			
	44200583	CLASS A PATCHES, TYPE IV, 12 INCH	SQ YD	499	499			
	44201031	CLASS B PATCHES, TYPE II, 15 INCH	SQ YD	1,916	1,916			
	44201035	CLASS B PATCHES, TYPE III, 15 INCH	SQ YD	59	59			
	44201037	CLASS B PATCHES, TYPE IV, 15 INCH	SQ YD	88	88			
	44213000	PATCHING REINFORCEMENT	SQ YD	1,389	1,389			
	44213200	SAW CUTS	FOOT	13,596	13,596			
	44300900	STRIP REFLECTIVE CRACK CONTROL TREATMENT SYSTEM A	FOOT	3,105	3,105			
	48101200	AGGREGATE SHOULDERS, TYPE B	TON	2,312	2,312			
	48203100	HOT-MIX ASPHALT SHOULDERS	TON	9,711	9,711			
	50102400	CONCRETE REMOVAL	CU YD	33.6		33.6		
	50101500	REMOVAL OF EXISTING SUPERSTRUCTURES	EACH	2		2		
	50105220	PIPE CULVERT REMOVAL	FOOT	1,052	1,052			
	50200100	STRUCTURE EXCAVATION	CU YD	124		124		
	50300100	FLOOR DRAINS	EACH	16		16		

		SUMMARY OF QUANTITIES		URBAN 90% FED. 10% STATE				
	CODE NO.	PAY ITEM	UNIT	TOTAL QUANTITY	I000-2A	SFTY - 2A	Y080	
	50300300	PROTECTIVE COAT	SQ YD	1,743		1,743		
	50300225	CONCRETE STRUCTURES	CU YD	20.6		20.6		
	50300255	CONCRETE SUPERSTRUCTURES	CU YD	566.3		566.3		
	50300260	BRIDGE DECK GROOVING	SQ YD	1,448	513	935		
	50800205	REINFORCEMENT BARS, EPOXY COATED	POUND	154,060		154,060		
	50800515	BAR SPLICERS	EACH	164		164		
	51500100	NAME PLATES	EACH	2		2		
	52000110	PREFORMED JOINT STRIP SEAL	FOOT	172		172		
	52100010	ELASTOMERIC BEARING ASSEMBLY, TYPE I	EACH	24		24		
	52100520	ANCHOR BOLTS, 1"	EACH	48		48		
	54002050	EXPANSION BOLTS 3/4 INCH X 9 INCH	EACH	120	120			
	5421A012	PIPE CULVERTS, CLASS A, TYPE 1 12" (TEMPORARY)	FOOT	102	102			
	5421A018	PIPE CULVERTS, CLASS A, TYPE 1 18" (TEMPORARY)	FOOT	950	950			
	58700300	CONCRETE SEALER	SQ FT	964		964		
	59100100	GEOCOMPOSITE WALL DRAIN	SQ YD	82		82		
	60100060	CONCRETE HEADWALL FOR PIPE DRAINS	EACH	2	2			
	60109580	PIPE UNDERDRAINS FOR STRUCTURES 4"	FOOT	224		224		
	60218400	MANHOLES, TYPE A, 4'-DIAMETER, TYPE 1 FRAME, CLOSED LID	EACH	2	2			
	60224446	MANHOLES, TYPE A, 7'-DIAMETER, TYPE 1 FRAME, CLOSED LID	EACH	3	3			
	60500040	REMOVING MANHOLES	EACH	5	5			
*	63000000	STEEL PLATE BEAM GUARDRAIL, TYPE A	FOOT	6,050	6,050			
*	63100045	TRAFFIC BARRIER TERMINAL, TYPE 2	EACH	8	8			
*	63100070	TRAFFIC BARRIER TERMINAL, TYPE 5	EACH	4	4			
*	63100085	TRAFFIC BARRIER TERMINAL, TYPE 6	EACH	12	12			
*	63100167	TRAFFIC BARRIER TERMINAL, TYPE 1 (SPECIAL) TANGENT	EACH	3	3			
	63200310	GUARDRAIL REMOVAL	FOOT	5,651	5,651			

* SPECIALTY ITEM

URBAN

	SUMMARY OF QUANTITIES			90% FED. 10% STATE				
	CODE NO.	PAY ITEM	UNIT	TOTAL QUANTITY	I000-2A	SFTY - 2A	Y080	
	63500110	DELINEATORS (SPECIAL)	EACH	4	4			
	64200105	SHOULDER RUMBLE STRIP	FOOT	50,912	50,912			
	66400305	CHAIN LINK FENCE, 6'	FOOT	110	110			
	67000400	ENGINEER'S FIELD OFFICE, TYPE A	CAL MO	10	10			
	67100100	MOBILIZATION	L SUM	1	1			
	70100205	TRAFFIC CONTROL AND PROTECTION, STANDARD 701401	EACH	6	6			
	70100410	TRAFFIC CONTROL AND PROTECTION, STANDARD 701416	EACH	2	2			
	70100420	TRAFFIC CONTROL AND PROTECTION, STANDARD 701411	EACH	1	1			
	70100700	TRAFFIC CONTROL AND PROTECTION, STANDARD 701406	L SUM	1	1			
	70101835	TRAFFIC CONTROL AND PROTECTION, STANDARD BLR 22	L SUM	1	1			
	70103815	TRAFFIC CONTROL SURVEILLANCE	CAL DA	45	45			
	70106800	CHANGEABLE MESSAGE SIGN	CAL MO	16	16			
	70300100	SHORT-TERM PAVEMENT MARKING	FOOT	20,556	20,556			
	70300520	PAVEMENT MARKING TAPE, TYPE III 4"	FOOT	30,238	30,238			
	70300625	TEMPORARY PAINT PAVEMENT MARKING LINE 4"	FOOT	60,304	60,304			
	70300635	TEMPORARY PAINT PAVEMENT MARKING LINE 6"	FOOT	6,702	6,702			
	70300640	TEMPORARY PAINT PAVEMENT MARKING LINE 8"	FOOT	928	928			
	70301000	WORK ZONE PAVEMENT MARKING REMOVAL	SQ FT	11,795	11,795			
	70400100	TEMPORARY CONCRETE BARRIER	FOOT	1,092	1,092			
	70400200	RELOCATE TEMPORARY CONCRETE BARRIER	FOOT	1,044	1,044			
	78003110	PREFORMED PLASTIC PAVEMENT MARKING, TYPE B - LINE 4"	FOOT	60,304	60,304			
	78003130	PREFORMED PLASTIC PAVEMENT MARKING, TYPE B - LINE 6"	FOOT	6,702	6,702			
	78003140	PREFORMED PLASTIC PAVEMENT MARKING, TYPE B - LINE 8"	FOOT	928	928			
*	78100100	RAISED REFLECTIVE PAVEMENT MARKER	EACH	399	399			
	78300200	RAISED REFLECTIVE PAVEMENT MARKER REMOVAL	EACH	397	397			
*	78200410	GUARDRAIL MARKERS, TYPE A	EACH	80	80			

* SPECIALTY ITEM

		SUMMARY OF QUANTITIES			← 90% FED. 10% STATE →			
	CODE NO.	PAY ITEM	UNIT	TOTAL QUANTITY	I000-2A	SFTY - 2A	Y080	
*	78201000	TERMINAL MARKER - DIRECT APPLIED	EACH	3	3			
	X0301512	GUARDRAIL AGGREGATE EROSION CONTROL	TON	397	397			
	X0322729	MATERIAL TRANSFER DEVICE	TON	15,792	15,792			
	X0325279	CLASS SI CONCRETE (MISCELLANEOUS)	CU YD	5	5			
	X0325305	STRUCTURAL REPAIR OF CONCRETE (DEPTH EQUAL TO OR LESS THAN 5 INCHES)	SQ FT	11.8		11.8		
■	X0549200	CLEANING PAVED DITCH	FOOT	123	123			
	x2020500	EARTH EXCAVATION (ROCKFILL)	CU YD	4,384	4,384			
■ *	X2503100	MOWING	UNIT	2	2			
	X4067107	POLYMERIZED LEVELING BINDER (MACHINE METHOD), IL-4.75, N50	TON	372	372			
*	X7200200	WIDE LOAD SIGNING	L SUM	1	1			
	Z0002005	ATTENUATOR BASE	SQ YD	94	94			
	Z0013798	CONSTRUCTION LAYOUT	L SUM	1	1			
	Z0017202	DOWEL BARS 1 1/2"	EACH	4,690	4,690			
	Z0022800	FENCE REMOVAL	FOOT	98	98			
	Z0030150	IMPACT ATTENUATORS (NON-REDIRECTIVE), TEST LEVEL 3	EACH	2	2			
	Z0030250	IMPACT ATTENUATORS, TEMPORARY (NON-REDIRECTIVE), TEST LEVEL 3	EACH	1	1			
	Z0030350	IMPACT ATTENUATORS, RELOCATE (NON-REDIRECTIVE), TEST LEVEL 3	EACH	1	1			
	Z0054500	ROCK FILL	TON	5,778	5,778			
	Z0075330	TIE BARS 1 1/4"	EACH	24	24			
	Z0076600	TRAINEES	HOUR	500			500	

■ 100% STATE * SPECIALTY ITEM

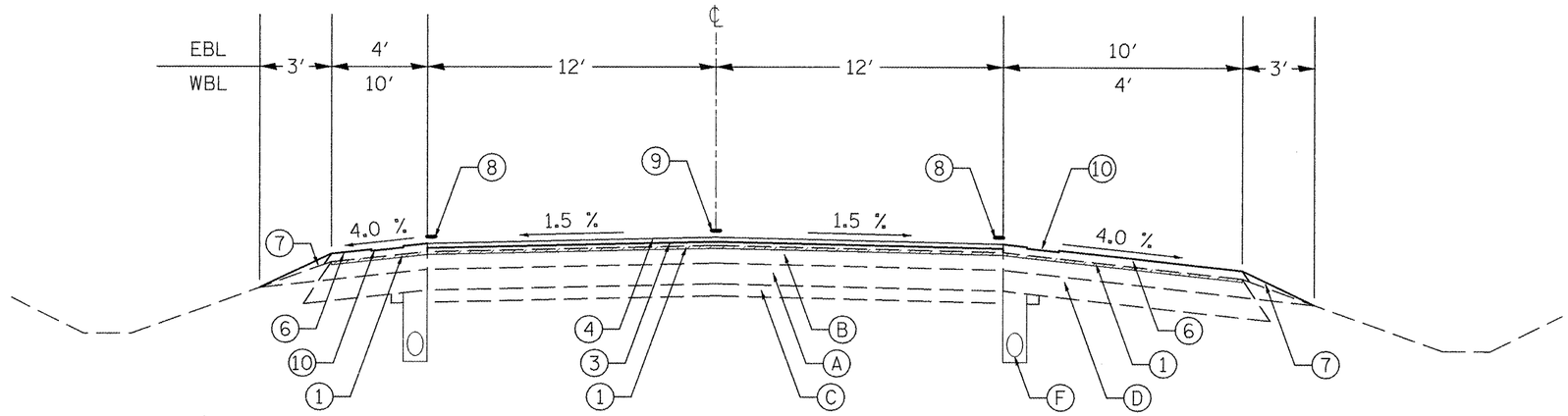

EB LOCATIONS

STA. 513+62 TO 569+58.55

STA. 570+70 TO 579+97.62

STA. 609+92.37 TO 649+77.40

WB LOCATIONS

STA. 518+07.10 TO 569+47.50

STA. 570+59.19 TO 579+92.52

STA. 609+92.37 TO 650+00

LEGEND - EXISTING

- (A) PCC PAVEMENT (7" EB, 10" WB & RAMPS)
- (B) 4 1/2" - 5" BIT. OVERLAY
- (C) SUB-BASE GRAN. MAT., TYPE A
- (D) BITUMINOUS SHOULDER
- (E) COMB. CONC. CURB & GUTTER TYPE B-9.06
- (F) PIPE UNDERDRAIN
- (G) STEEL PLATE BEAM GUARDRAIL
- (H) BITUMINOUS PAVEMENT

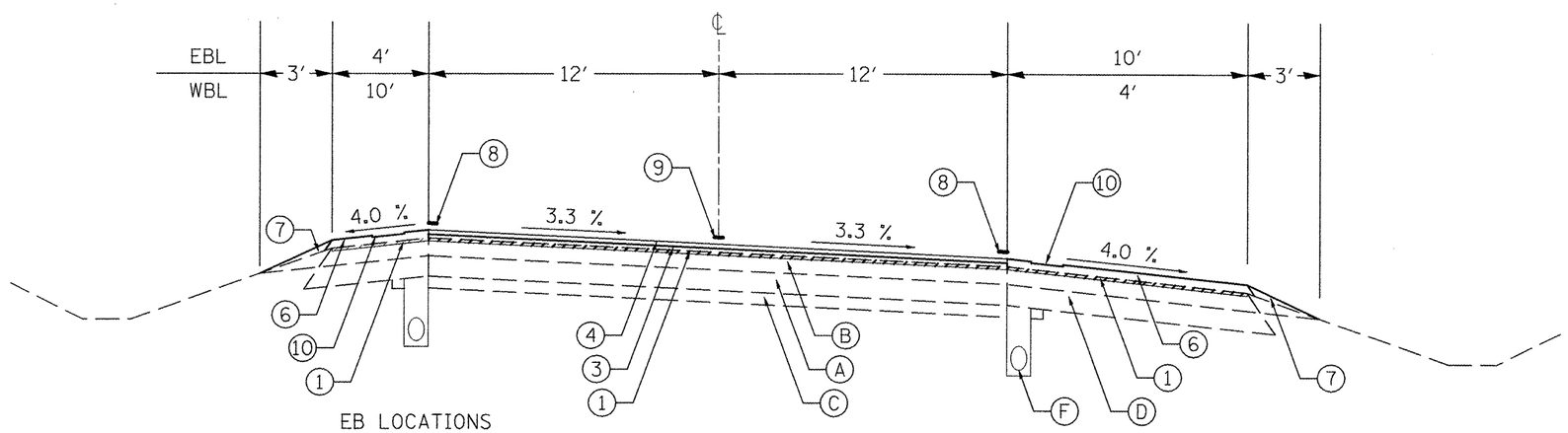

EB LOCATIONS

STA. 579+97.62 TO 609+92.37

WB LOCATIONS

STA. 579+92.52 TO 609+92.37

LEGEND - PROPOSED

1. HMA SURFACE REMOVAL, 1-1/2"
2. SHOULDER REMOVAL, 8"
3. HMA BINDER CSE., 2-1/4"
4. HMA SURFACE CSE., 1-1/2"
5. HMA LEVELING BINDER, 3/4"
6. HMA SHOULDER, 3-3/4"
7. AGGREGATE SHOULDER, TYPE B
8. EPOXY PAVEMENT MARKING
9. PREFORMED PLASTIC PAVEMENT MARKING, TYPE B
10. SHOULDER RUMBLE STRIP
11. STRIP REFLECTIVE CRACK CONTROL TREATMENT SYSTEM A

FILE NAME = 68602 PLANS .dgn	USER NAME = taroja	DESIGNED -	REVISED -
		DRAWN -	REVISED -
	PLOT SCALE = 40.0000 ' / IN.	CHECKED -	REVISED -
	PLOT DATE = 12/12/2008	DATE -	REVISED -

STATE OF ILLINOIS
DEPARTMENT OF TRANSPORTATION

TYPICAL SECTIONS - MAINLINE

SCALE: | SHEET NO. 1 OF 5 SHEETS | STA. | TO STA.

F.A.I. RTE.	SECTION	COUNTY	TOTAL SHEETS	SHEET NO.
74	48(27RS-3; (27HB-5)I, I-1)	KNOX	104	9

CONTRACT NO. 68062

FED. ROAD DIST. NO. | ILLINOIS | FED. AID PROJECT

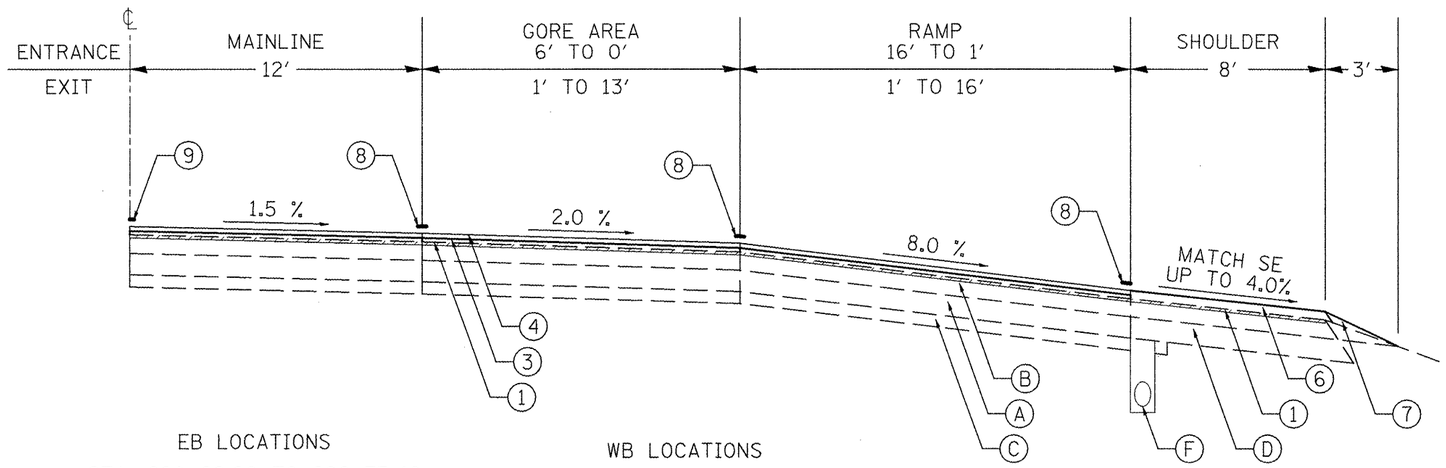

EB LOCATIONS

STA. 620+69.80 TO 626+73.40

STA. 643+59.30 TO 649+79.00

WB LOCATIONS

STA. 615+28.30 TO 623+28.30

STA. 632+90.00 TO 638+66.60

LEGEND - EXISTING

- (A) PCC PAVEMENT (7″ EB, 10″ WB & RAMPS)
- (B) 4 1/2″ - 5″ BIT. OVERLAY
- (C) SUB-BASE GRAN. MAT., TYPE A
- (D) BITUMINOUS SHOULDER
- (E) COMB. CONC. CURB & GUTTER TYPE B-9.06
- (F) PIPE UNDERDRAIN
- (G) STEEL PLATE BEAM GUARDRAIL
- (H) BITUMINOUS PAVEMENT

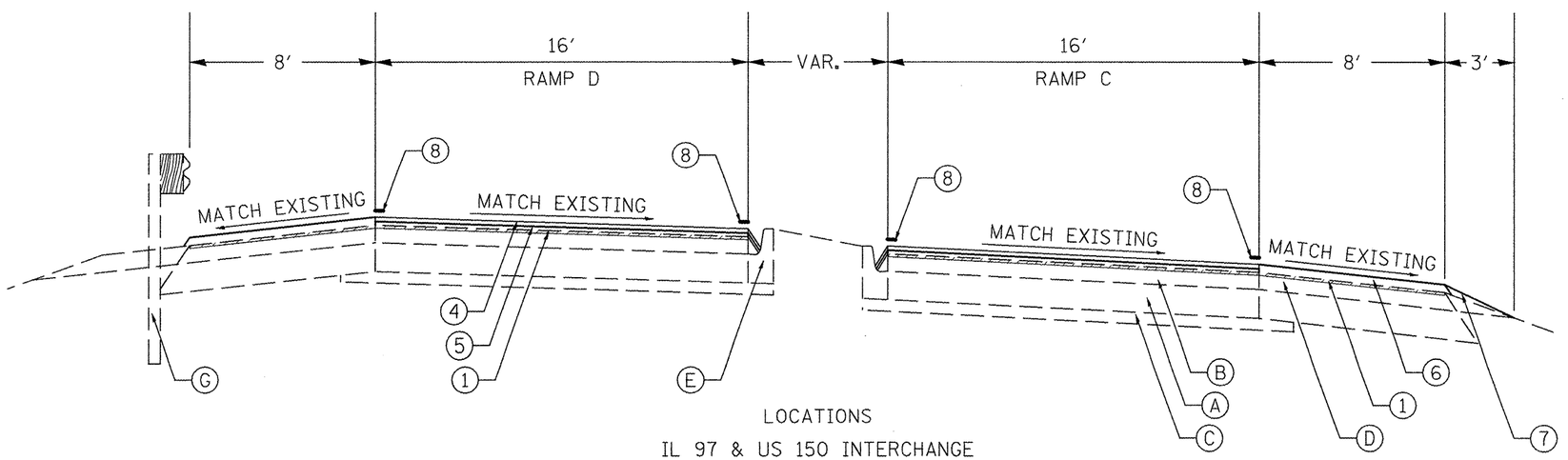

LOCATIONS

IL 97 & US 150 INTERCHANGE

RAMP C - STA. 0+00.00 TO 13+18.00

RAMP D - STA. 1+25.20 TO 17+80.00

LEGEND - PROPOSED

- (1) HMA SURFACE REMOVAL, 1-1/2″
- (2) SHOULDER REMOVAL, 8″
- (3) HMA BINDER CSE., 2-1/4″
- (4) HMA SURFACE CSE., 1-1/2″
- (5) HMA LEVELING BINDER, 3/4″
- (6) HMA SHOULDER, 3-3/4″
- (7) AGGREGATE SHOULDER, TYPE B
- (8) EPOXY PAVEMENT MARKING
- (9) PREFORMED PLASTIC PAVEMENT MARKING, TYPE B
- (10) SHOULDER RUMBLE STRIP
- (11) STRIP REFLECTIVE CRACK CONTROL TREATMENT SYSTEM A

FILE NAME = 68602 PLANS .dgn	USER NAME = toroje	DESIGNED -	REVISED -	STATE OF ILLINOIS DEPARTMENT OF TRANSPORTATION	TYPICAL SECTIONS - MAINLINE & RAMPS	F.A.I. RTE.	SECTION	COUNTY	TOTAL SHEETS	SHEET NO.
		DRAWN -	REVISED -			74	48(27RS-3; (27HB-5)I, I-1)	KNOX	104	10
	PLOT SCALE = 40.0000 ′ / IN.	CHECKED -	REVISED -					CONTRACT NO. 68062		
	PLOT DATE = 12/12/2008	DATE -	REVISED -		SCALE: SHEET NO. 2 OF 5 SHEETS STA. TO STA.	FED. ROAD DIST. NO.	ILLINOIS	FED. AID PROJECT		

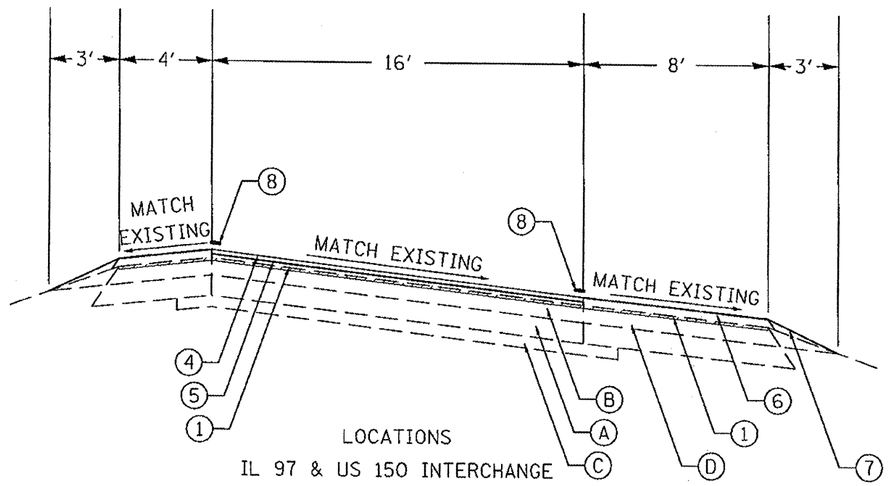

LOCATIONS
IL 97 & US 150 INTERCHANGE
RAMP A - STA. 0+00.00 TO 5+82.90
RAMP A - STA. 7+89.50 TO 10+22.30
RAMP B - STA. 1+58.90 TO 11+20.00

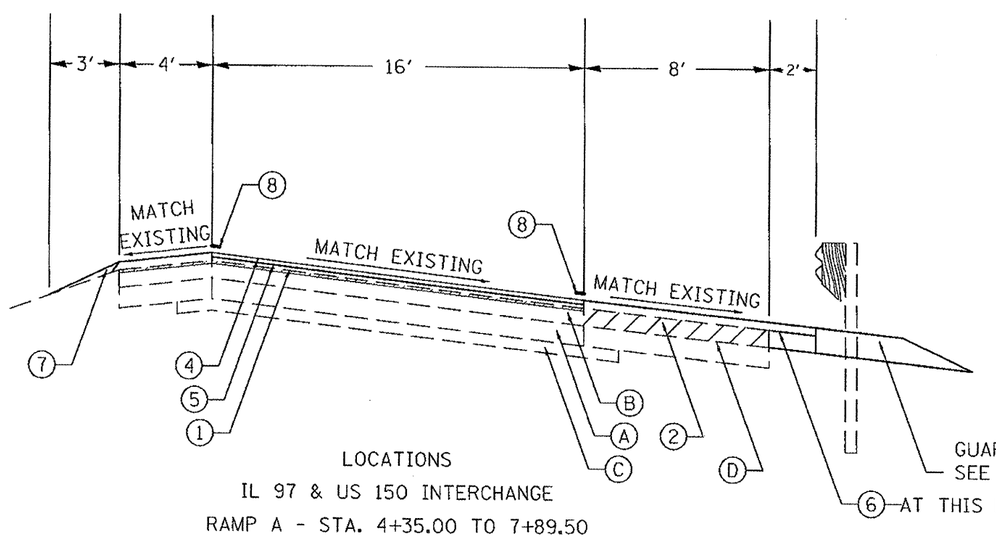

LOCATIONS
IL 97 & US 150 INTERCHANGE
RAMP A - STA. 4+35.00 TO 7+89.50

GUARDRAIL AGGREGATE EROSION CONTROL:
SEE DISTRICT CADD STANDARD 630101

(6) AT THIS LOCATION BITUMINOUS SHOULDER IS 8" THICK

LEGEND - EXISTING

- (A) PCC PAVEMENT (7" EB, 10" WB & RAMPS)
- (B) 4 1/2" - 5" BIT. OVERLAY
- (C) SUB-BASE GRAN. MAT., TYPE A
- (D) BITUMINOUS SHOULDER
- (E) COMB. CONC. CURB & GUTTER TYPE B-9.06
- (F) PIPE UNDERDRAIN
- (G) STEEL PLATE BEAM GUARDRAIL
- (H) BITUMINOUS PAVEMENT

LEGEND - PROPOSED

- (1) HMA SURFACE REMOVAL, 1-1/2"
- (2) SHOULDER REMOVAL, 8"
- (3) HMA BINDER CSE., 2-1/4"
- (4) HMA SURFACE CSE., 1-1/2"
- (5) HMA LEVELING BINDER, 3/4"
- (6) HMA SHOULDER, 3-3/4"
- (7) AGGREGATE SHOULDER, TYPE B
- (8) EPOXY PAVEMENT MARKING
- (9) PREFORMED PLASTIC PAVEMENT MARKING, TYPE B
- (10) SHOULDER RUMBLE STRIP
- (11) STRIP REFLECTIVE CRACK CONTROL TREATMENT SYSTEM A

FILE NAME = 68602 PLANS - Revised sheets as 01-02-09.dgn	USER NAME = tomoja	DESIGNED -	REVISED -
		DRAWN -	REVISED -
	PLOT SCALE = 40.0000 ' / IN.	CHECKED -	REVISED -
	PLOT DATE = 1/2/2009	DATE -	REVISED -

STATE OF ILLINOIS
DEPARTMENT OF TRANSPORTATION

TYPICAL SECTIONS - RAMPS

SCALE: | SHEET NO. 3 OF 5 SHEETS | STA. TO STA.

F.A.I. RTE.	SECTION	COUNTY	TOTAL SHEETS	SHEET NO.
74	48(27RS-3; (27HB-5)I, I-1)	KNOX	104	11
		CONTRACT NO. 68062		
FED. ROAD DIST. NO.	ILLINOIS	FED. AID PROJECT		

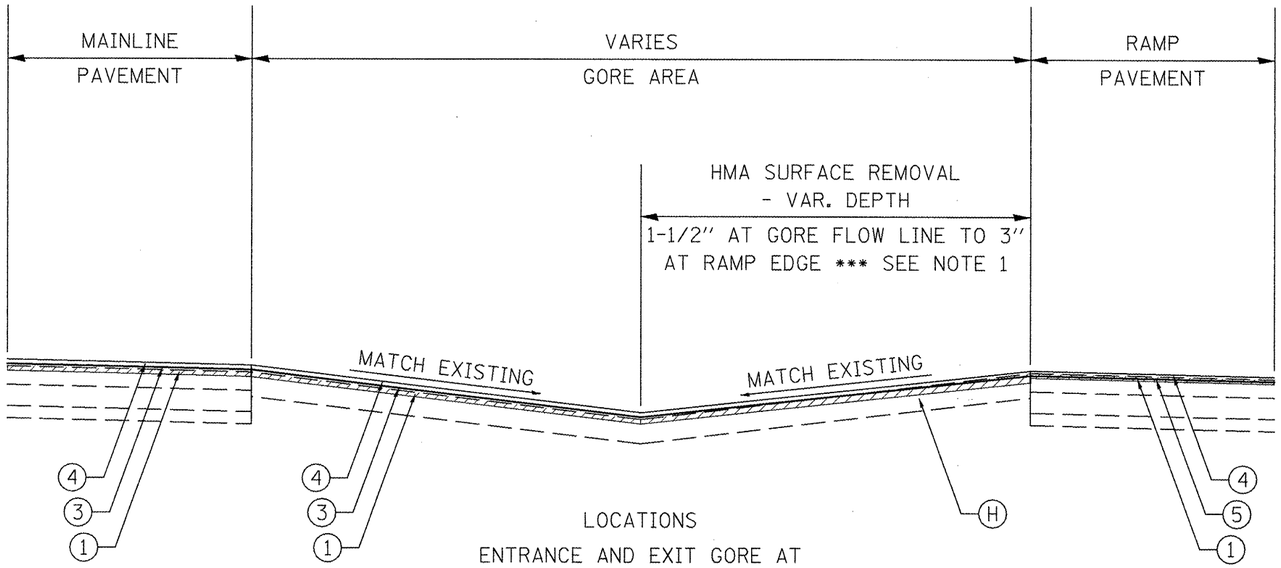

LOCATIONS
ENTRANCE AND EXIT GORE AT
IL 97 & US 150 INTERCHANGE

LEGEND - EXISTING

- (A) PCC PAVEMENT (7" EB, 10" WB & RAMPS)
- (B) 4 1/2" - 5" BIT. OVERLAY
- (C) SUB-BASE GRAN. MAT., TYPE A
- (D) BITUMINOUS SHOULDER
- (E) COMB. CONC. CURB & GUTTER TYPE B-9.06
- (F) PIPE UNDERDRAIN
- (G) STEEL PLATE BEAM GUARDRAIL
- (H) BITUMINOUS PAVEMENT

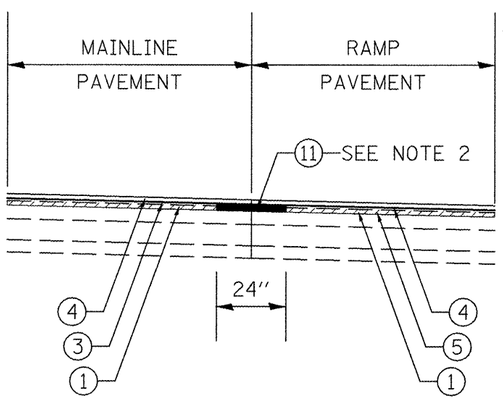

LOCATIONS

EB - RT. STA. 618+72 TO 626+73
EB - RT. STA. 643+51 TO 651+43
WB - RT. STA. 615+29 TO 623+28
WB - RT. STA. 632+91 TO 638+55

LEGEND - PROPOSED

- (1) HMA SURFACE REMOVAL, 1-1/2"
- (2) SHOULDER REMOVAL, 8"
- (3) HMA BINDER CSE., 2-1/4"
- (4) HMA SURFACE CSE., 1-1/2"
- (5) HMA LEVELING BINDER, 3/4"
- (6) HMA SHOULDER, 3-3/4"
- (7) AGGREGATE SHOULDER, TYPE B
- (8) EPOXY PAVEMENT MARKING
- (9) PREFORMED PLASTIC PAVEMENT MARKING, TYPE B
- (10) SHOULDER RUMBLE STRIP
- (11) STRIP REFLECTIVE CRACK CONTROL TREATMENT SYSTEM A

*** NOTE 1: HMA SURFACE REMOVAL - VAR. DEPTH TO BE INCLUDED AND PAID FOR AS PART OF HMA SURFACE REMOVAL, 1 1/2".

NOTE 2: STRIP REFLECTIVE CRACK CONTROL TREATMENT SYSTEM A SHALL BE PLACE BEFORE PLACING THE LEVELING BINDER AND BINDER COURSES. SEE RAMP CONFIGURATION SHEETS FOR MORE DETAILS ABOUT LOCATIONS.

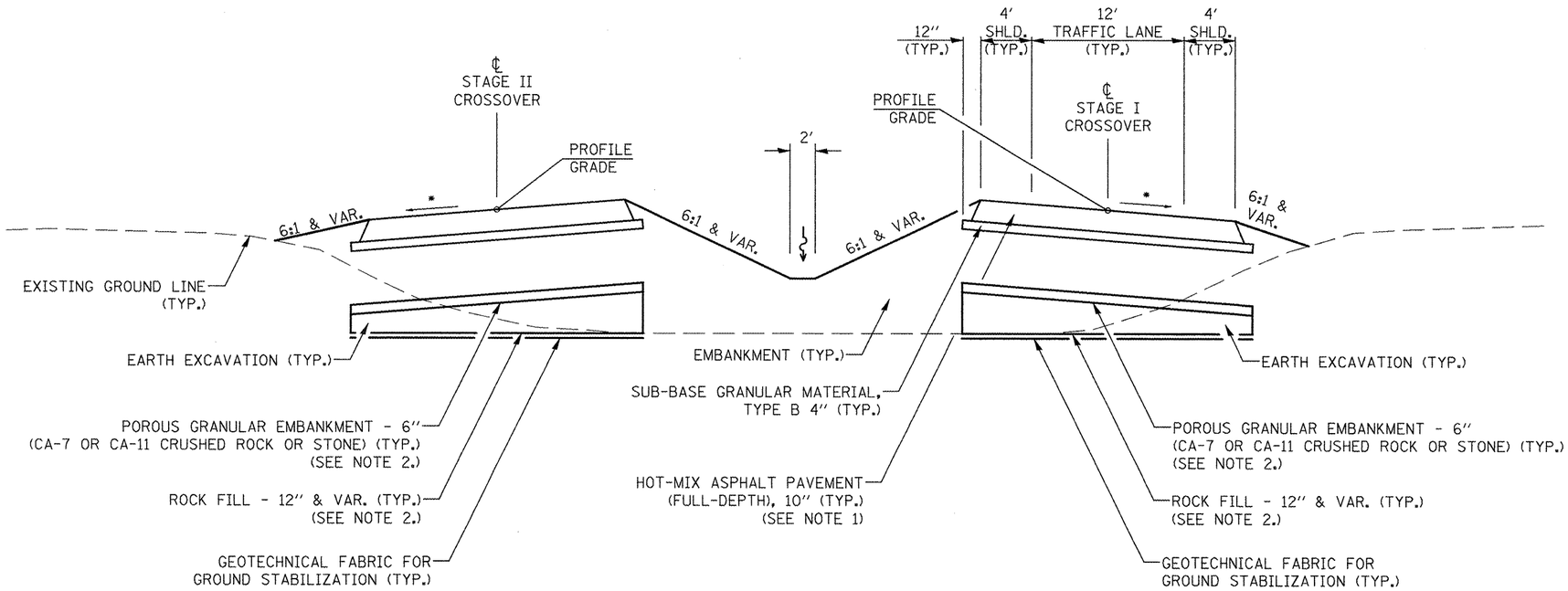

TYPICAL SECTION
TEMPORARY CROSSOVERS

* SEE CROSSOVER PLAN & PROFILE SHEETS FOR CROSS SLOPE TRANSITION TABLE.

NOTES:

1. PROPOSED HOT-MIX ASPHALT PAVEMENT (FULL-DEPTH), 10'' SHALL CONSIST OF 2'' OF HOT-MIX ASPHALT SURFACE COURSE, MIX "E", IL-9.5 OR IL-12.5, N90 OVER 8'' OF HOT-MIX ASPHALT BINDER COURSE, IL-19.0, N90.

2. PREPARATION OF THE EXISTING GROUND SURFACE SHALL BE PER ARTICLE 205.03 OF THE STANDARD SPECIFICATIONS FOR ROAD AND BRIDGE CONSTRUCTION. USAGE OF UNDERCUT AND THE ROCK FILL/POROUS GRANULAR EMBANKMENT TREATMENT SHALL BE AS DIRECTED BY THE ENGINEER.

FILE NAME = typsec_crossover - Modified 12-10-08 by	USER NAME = tor-o.je	DESIGNED - OWR	REVISED -	STATE OF ILLINOIS DEPARTMENT OF TRANSPORTATION	TYPICAL SECTION – CROSSOVER I-74 OVER TOWNSHIP ROAD 205	F.A.I RTE.	SECTION	COUNTY	TOTAL SHEETS	SHEET NO.
	ATR.dgn	DRAWN - OWR	REVISED -			74	48(27RS-3; (27HB-5)I, I-1)	KNOX	104	13
	PLOT SCALE = 40.0000 ' / IN.	CHECKED - FML	REVISED -					CONTRACT NO. 68062		
	PLOT DATE = 12/12/2008	DATE - 10/2008	REVISED -		SCALE: SHEET NO. -- OF -- SHEETS STA. TO STA.	FED. ROAD DIST. NO.	ILLINOIS	FED. AID PROJECT		

PATCHING SCHEDULE

LOCATION	CLASS A PATCHES - 12 INCH			CLASS B PATCHES - 15 INCH			PATCHING REINFORCEMENT	PAVEMENT FABRIC	SAW CUTS	DOWEL BARS 1½"	TIE BARS 1¼"
	TYPE II	TYPE III	TYPE IV	TYPE II	TYPE III	TYPE IV					
	SQ YD	SQ YD	SQ YD	SQ YD	SQ YD	SQ YD	SQ YD	SQ YD	SQ YD	SQ YD	EACH
MAIN LINE											
EB - STA. 514+22 TO STA. 649+17.40	645.34	237.60	498.68				1,381.62		4,474.8		
WB - STA. 518+67.40 TO STA. 649+40				1,704.28	58.66	88.00		146.66	7,924.4	4,290	24
RAMPS											
RAMP A - STA. 0+00 TO STA. 9+92.30				27.38					136.4	46	
RAMP B - STA. 1+88.90 TO STA. 17+80				62.58					352.0	123	
RAMP C - STA. 0+00 TO STA. 12+88				74.32					400.4	139	
RAMP D - STA. 1+55.20 TO STA. 11+20	7.82			46.93			7.82		308.0	92	
TOTAL	653	238	499	1,916	59	88	1,389	147	13,596	4,690	24

DELINEATORS (SPECIAL)

LOCATION	REFLECTORS	
	2 AMBER	3 AMBER
MEDIAN TURNAROUND	EACH	EACH
EB - LT. STA. 597+45	1	
EB - LT. STA. 589+45		1
WB - LT. STA. 598+05	1	
WB - LT. STA. 606+05		1
SUB-TOTAL	2	2
TOTAL	4	

BRIDGE APPROACH SCHEDULE

LOCATION	PAVEMENT	CONNECTOR
	SQ YD	SQ YD
EB - STA. 569+31.49	139.43	27.89
EB - STA. 570+73.03	139.43	27.89
WB - STA. 569+20.52	139.43	27.89
WB - STA. 570+62.06	139.43	27.89
SUB-TOTAL	557.72	111.56
TOTAL	558	112

TEMPORARY RAMPS

LOCATION	SQ YD
EB - STA. 513+62	26.7
EB - STA. 649+77.40	26.7
WB - STA. 518+07.10	26.7
WB - STA. 650+00	26.7
RAMP A - STA. 10+22.30	8.9
RAMP B - STA. 1+58.90	8.9
RAMP C - STA. 13+18	8.9
RAMP D - STA. 1+25.20	8.9
SUB-TOTAL	142.4
TOTAL	142

CONSTRUCTING TEST STRIP

LOCATION	EACH
JOBSITE	2
TOTAL	2

MOBILIZATION

LOCATION	LUMP SUM
JOBSITE	1
TOTAL	1

ENGINEER'S FIELD OFFICE, TYPE A

LOCATION	CAL MO
JOBSITE	10
TOTAL	10

GRADING AND SHAPING DITCHES

LOCATION	FOOT
EB - RT. STA. 622+72.60 TO 623+27.30	54.7
WB - RT. STA. 553+07.40 TO 554+63.20	155.8
WB - RT. STA. 604+23.40 TO 604+95.90	72.5
WB - RT. STA. 635+03.20 TO 635+83.20	80.0
TOTAL	363

MOWING

LOCATION	UNIT
JOBSITE	272
TOTAL	272

MATERIAL TRANSFER DEVICE

LOCATION	TON
JOBSITE - BINDER	9,037
JOBSITE - SURFACE	6,755
TOTAL	15,792

TABULATION OF RESURFACING QUANTITIES

LOCATION	POLYMERIZED HMA SURFACE COURSE, MIX "E", N90	POLYMERIZED HMA BINDER COURSE, IL-19.0, N90	POLYMERIZED LEVELING BINDER (MM), IL-4.75, N50	POLYMERIZED BITUMINOUS MATERALS (PRIME COAT)		AGGREGATE (PRIME COAT)		HOT-MIX ASPHALT SHOULDERS		AGGREGATE SHOULDERS, TYPE B		HMA BASE COURSE, 8"	HMA SURFACE REMOVAL - BUTT JOINT	HMA SURFACE REMOVAL 1½"
	TONS	TONS	TONS	TONS		TONS		TONS		TONS		TONS	TONS	TONS
MAINLINE				COLD MILLED	FOG COAT	COLD MILLED	FOG COAT	LT	RT	LT	RT			
EB - LT. STA. 513+62 TO STA. 649+77.40	3,040.52	4,572.59		22.57	6.77	112.90	56.45	1,429.37		513.13			506.6	55,950.21
EB - RT. STA. 513+62 TO STA. 649+77.40									3,078.37		507.05			
WB - LT. STA. 518+07.10 TO STA. 650+00	2,945.38	4,429.52		21.87	6.56	109.42	54.71	1,400.39		497.07			506.6	54,201.58
WB - RT. STA. 518+07.10 TO STA. 650+00									3,018.86		497.07			
RAMPS														
RAMP A - LT. STA. 0+60 TO STA. 10+22.30	153.86		76.63	1.26	0.38	6.32	3.15	53.89		36.57			93.3	3,060.49
RAMP A - RT. STA. 0+00 TO STA. 10+22.30									176.58		38.85			
RAMP B - LT. STA. 9+61.80 TO STA. 15+00	243.98		121.51	1.83	0.55	9.13	4.56	29.96		20.33			93.3	4,507.38
RAMP B - RT. STA. 1+58.90 TO STA. 17+80									184.81		61.60			
RAMP C - LT. STA. 0+00 TO STA. 6+41	198.36		98.80	1.53	0.45	7.61	3.80	36.40		24.70			93.3	3,723.56
RAMP C - RT. STA. 0+00 TO STA. 13+18									147.62		50.08			
RAMP D - LT. STA. 1+25.20 TO STA. 8+50	149.72		74.57	1.19	0.37	5.95	2.97	41.31		27.54			93.3	2,881.60
RAMP D - RT. STA. 1+25.20 TO STA. 11+20									113.41		37.80			
MEDIAN TURNAROUND														
STA. 597+75	23.16	34.79		0.10	0.03	0.48	0.28					2,454.90		238.33
SUBTOTAL	6,754.98	9,036.90	371.51	50.35	15.11	251.53	125.92	2,991.32	6,719.65	1,119.34	1,192.45	2,454.90	1,386.4	124,563.15
TOTAL	6,755	9,037	372	66*		377		9,711		2,312		2,455	1,387	124,563

*ADD QUANTITY FOR TEMPORARY CROSS-OVER FROM SHEET 19. (TOTAL = 66 + 3.3 = 69.3).

PRIME COAT CONVERSION FACTORS

SURFACE TYPE	BIT PR COAT (GAL/SQ YD)	AGG PR COAT (LB/SQ YD)
COLD MILLED SURFACES	0.1	4
EXISTING PAVEMENT	0.05	4
NEW HMA COURSES	0.03	2

HMA & AGGREGATE CONVERSION FACTORS

SURFACE TYPE	LB/SQ YD/IN	TONS/CU YD
HMA SURF. COURSES	112	2.016
ALL OTHER HMA	112	2.016
AGGREGATE SHOULDERS	114	2.05

TABULATION OF GUARDRAIL QUANTITIES

LOCATION	GUARDRAIL REMOVAL FOOT	STEEL PLATE BEAM GUARDRAIL, TYPE A FOOT	TRAFFIC BARRIER TERMINAL, TYPE 1, SPECIAL (TANGENT) EACH	TRAFFIC BARRIER TERMINAL, TYPE 2 EACH	GUARDRAIL AGGREGATE EROSION CONTROL TONS	GUARDRAIL MARKERS, TYPE A EACH	TERMINAL MARKER - DIRECT APPLIED EACH
MAINLINE							
EB - RT. STA. 515+22 TO STA. 520+90.50	568.5	537.5	1		57.55	7	
EB - RT. STA. 526+46.50 TO STA. 529+00	253.5	250.0			25.66	3	
EB - RT. STA. 533+64.50 TO STA. 537+40	375.5	375.0			38.01	5	
EB - RT. STA. 538+77 TO STA. 540+65	188.0	187.5			19.03	3	
EB - RT. STA. 561+55.60 TO STA. 569+38	782.4	787.5			79.21	10	
EB - RT. STA. 570+84 TO STA. 571+64	80.0	62.5		1	8.10	1	
EB - RT. STA. 599+94 TO STA. 602+92	298.0	300.0			30.17	4	
WB - LT. STA. 517+77.70 TO STA. 522+78.70	501.0	487.5		1	50.72	6	
WB - LT. STA. 528+83.30 TO STA. 531+93.40	310.1	312.5			31.39	4	
WB - LT. STA. 535+01.80 TO STA. 541+93.9	692.1	675.0		1	70.06	9	
WB - LT. STA. 561+53.70 TO STA. 569+28	774.3	762.5		1	78.39	10	
WB - LT. STA. 570+74 TO STA. 571+53	79.0	75.0			8.00	1	
WB - LT. STA. 600+34.20 TO STA. 604+47	412.8	400.0		1	41.79	5	
WB - LT. STA. 636+36.40 TO STA. 638+84	247.6	250.0			25.07	3	
RAMPS							
RAMP A - LT. STA. 2+32.30 TO STA. 4+81.30	37.5		1	1	5.07	1	1
RAMP A - RT. STA. 4+35.00 TO STA. 10+22.30	587.3	587.5			59.46	6	
RAMP B - LT. STA. 10+73 TO STA. 11+90.40	37.5		1	1	5.07	1	1
RAMP D - RT. STA. 1+25.20 TO STA. 5+74	12.5			1	1.27	1	1
TOTAL	6,238	6,050	3	8	634	80	3

PAVED SHOULDER REMOVAL

LOCATION	SQ YD
RAMP A	
RT. STA. 4+35.00 TO 7+89.50	315.11
TOTAL	315

ATTENUATOR BASE

LOCATION	SQ YD
S.N. 048-0049	
STA. 529+12.92	93.14
TOTAL	94

FENCE REMOVAL

LOCATION	FOOT
MAINLINE	
EB - RT. STA. 569+45	49
WB - RT. STA. 570+75	49
TOTAL	98

TRAFFIC BARRIER TERMINAL, TYPE 6

LOCATION	EACH
MAINLINE	
EB & WB - RT. STA. 529+00	2
EB & WB - RT. STA. 529+25	2
EB & WB - RT. STA. 636+15	2
EB & WB - RT. STA. 636+45	2
TOTAL	8*

*ADD QUANTITY FOR STRUCTURES FROM BILL OF MATERIAL. (TOTAL = 8 + 4 = 12).

CLASS SI CONCRETE (MISC.)

LOCATION	CU YD
MAINLINE	
S.N. 048-0030 (STA. 636+30)	2.01
S.N. 048-0049 (STA.L 529+12.92)	3.00
TOTAL	5

EXPANSION BOLTS 3/4 IN. X 9 IN.

LOCATION	EACH
MAINLINE	
S.N. 048-0030 (STA. 636+30)	48
S.N. 048-0049 (STA.L 529+12.92)	72
TOTAL	120

CLEANING PAVED DITCH

LOCATION	FOOT
TR 205	
LEFT	79
RIGHT	44
TOTAL	123

SHOULDER RUMBLE STRIP	
LOCATION	FOOT
MAIN LINE	
EB - LT. STA. 513+62 TO STA. 649+77.4	13,615.4
EB - RT. STA. 515+22 TO STA. 622+15	10,693
EB - RT. STA. 627+75 TO STA. 642+60	1,485
EB - RT. STA. 645+00 TO STA. 649+77.4	477.4
WB - LT. STA. 518+07.1 TO STA. 650+00	13,192.9
WB - RT. STA. 518+07.1 TO STA. 614+30	9,622.9
WB - RT. STA. 624+50 TO STA. 631+50	700
WB - RT. STA. 638+75 TO STA. 650+00	1,125
TOTAL	50,912

SHORT-TERM PAVEMENT MARKING			
LOCATION	FOOT	NO. APPLICATIONS	FOOT
MAINLINE			
EB - ℄ STA. 513+62 TO STA. 649+77.40	1,362	4	5,448
WB - ℄ STA. 518+07.10 TO STA. 650+00	1,319	4	5,276
SHOULDERS			
EB - LT./RT. STA. 513+62 TO STA. 649+77.4	1,089	4	4,356
WB - LT./RT. STA. 518+07.1 TO STA. 650+00	1,055	4	4,220
RAMP A - LT./RT. STA. 0+00 TO 10+22.3	80	4	320
RAMP B - LT./RT. STA. 1+58.9 TO 17+80	86	4	344
RAMP C - LT./RT. STA. 0+00 TO 13+18	79	4	316
RAMP D - LT./RT. STA. 1+25.2 TO 11+20	69	4	276
TOTAL			20,556

TEMPORARY PAINT PAVEMENT MARKING - LINE 4"		
LOCATION	WHITE	YELLOW
	FOOT	FOOT
MAINLINE		
EB - LT. STA. 513+62 TO STA. 649+77.40		13,615.4
EB - RT. STA. 513+62 TO STA. 622+15	10,853	
EB - RT. STA. 627+75 TO STA. 642+60	1,485	
EB - RT. STA. 645+00 TO STA. 649+77.40	477.4	
WB - LT. STA. 518+07.10 TO STA. 650+00		13,192.9
WB - RT. STA. 518+07.10 TO STA. 614+30	9,622.9	
WB - RT. STA. 624+50 TO STA. 631+50	700	
WB - RT. STA. 638+75 TO STA. 650+00	1,125	
RAMPS		
RAMP A - LT. STA. 1+60 TO STA. 10+22.30		862.3
RAMP A - RT. STA. 0+00 TO STA. 10+22.30	1,022.3	
RAMP B - LT. STA. 1+58.90 TO STA. 15+00		1,341.1
RAMP B - RT. STA. 1+58.90 TO STA. 17+80	1,621.1	
RAMP C - LT. STA. 0+60 TO STA. 13+18		1,258
RAMP C - RT. STA. 0+00 TO STA. 13+18	1,318	
RAMP D - LT. STA. 1+25.20 TO STA. 9+40		814.8
RAMP D - RT. STA. 1+25.20 TO STA. 11+20	994.8	
SUB-TOTAL	29,219.5	31,084.5
TOTAL	60,304	

WORK ZONE PAVEMENT MARKING REMOVAL	
LOCATION	SQ FT
MAINLINE	
EB - ℄ STA. 513+62 TO STA. 649+77.40	454
WB - ℄ STA. 518+07.10 TO STA. 650+00	440
SHOULDERS	
EB - LT./RT. STA. 513+62 TO STA. 649+77.4	363
WB - LT./RT. STA. 518+07.1 TO STA. 650+00	352
RAMP A - LT./RT. STA. 0+00 TO 10+22.3	27
RAMP B - LT./RT. STA. 58.91+ TO 17+80	29
RAMP C - LT./RT. STA. 0+00 TO 13+18	27
RAMP D - LT./RT. STA. 5.21+2 TO 11+20	23
TOTAL	1,715

*ADD QUANTITY FOR TEMPORARY CROSS-OVER FROM SHEET 19. (TOTAL = 1715 + 10080 = 11795).

TEMPORARY PAINT PAVEMENT MARKING - LINE 8"	
LOCATION	WHITE
	FOOT
MAINLINE	
EB - RT. STA. 513+62 TO STA. 515+22 (DOTTED LINE BY RAMP)	53
EB - RT. STA. 626+70 TO STA. 627+75	105
EB - RT. STA. 642+60 TO STA. 643+55	95
WB - RT. STA. 623+25 TO STA. 624+50	125
WB - RT. STA. 631+50 TO STA. 632+90	140
RAMPS	
RAMP A - LT. STA. 0+00 TO STA. 1+60	160
RAMP B - LT. STA. 15+00 TO STA. 15+90	90
RAMP C - LT. STA. 0+00 TO STA. 0+60	60
RAMP D - LT. STA. 9+40 TO STA. 10+40	100
TOTAL	928

CHAIN LINK FENCE, 6'	
LOCATION	FOOT
MAINLINE	
EB - RT. STA. 569+45	55
WB - RT. STA. 570+75	55
TOTAL	110

STRIP REFLECTIVE CRACK CONTROL TREATMENT SYSTEM A	
LOCATION	FOOT
MAINLINE	
EB - RT. STA. 618+72 TO STA. 626+73	842
EB - RT. STA. 643+51 TO STA. 651+43	832
WB - RT. STA. 615+29 TO STA. 623+28	839
WB - RT. STA. 632+91 TO STA. 638+55	593
TOTAL	3,105

PREFORMED PLASTIC PAVEMENT MARKING, TYPE B - LINE 4"		
LOCATION	WHITE	YELLOW
	FOOT	FOOT
MAINLINE		
EB - LT. STA. 513+62 TO STA.649+77.40		13,615.4
EB - RT. STA. 513+62 TO STA. 622+15	10,853	
EB - RT. STA. 627+75 TO STA. 642+60	1,485	
EB - RT. STA. 645+00 TO STA. 649+77.40	477.4	
WB - LT. STA. 518+07.01 TO STA. 650+00		13,192.9
WB - RT. STA. 513+62 TO STA. 614+30	9,622.9	
WB - RT. STA. 624+50 TO STA. 631+50	700	
WB - RT. STA. 638+75 TO STA. 650+00	1,125	
RAMPS		
RAMP A - LT. STA. 1+60 TO STA. 10+22.3		862.3
RAMP A - RT. STA. 0+00 TO STA. 10+22.3	1,022.3	
RAMP B - LT. STA. 1+58.9 TO STA. 15+00		1,341.1
RAMP B - RT. STA. 1+58.9 TO STA. 17+80	1,621.1	
RAMP C - LT. STA. 0+60 TO STA. 13+18		1,258
RAMP C - RT. STA. 0+00 TO STA. 13+18	1,318	
RAMP D - LT. STA. 1+25.2 TO STA. 9+40		814.8
RAMP D - RT. STA. 1+25.2 TO STA. 11+20	994.8	
SUB-TOTAL	29,219.5	31,084.5
TOTAL	60,304	

PREFORMED PLASTIC PAVEMENT MARKING, TYPE B - LINE 8"	
LOCATION	WHITE
	FOOT
MAINLINE	
EB - RT. STA. 513+62 TO STA. 515+22 (DOTTED LINE BY RAMP)	53
EB - RT. STA. 626+70 TO STA. 627+75	105
EB - RT. STA. 642+60 TO STA. 643+55	95
WB - RT. STA. 623+25 TO STA. 624+50	125
WB - RT. STA. 631+50 TO STA. 632+90	140
RAMPS	
RAMP A - LT. STA. 0+00 TO STA. 1+60	160
RAMP B - LT. STA. 15+00 TO STA. 15+90	90
RAMP C - LT. STA. 0+00 TO STA. 0+60	60
RAMP D - LT. STA. 9+40 TO STA. 10+40	100
TOTAL	928

RAISED REFLECTIVE PAVEMENT MARKER	
LOCATION	EACH
MAINLINE	
EB - STA. 513+62 TO STA. 649+77.40	186
WB - STA. 518+07.10 TO STA. 650+00	181
RAMPS	
RAMP A	8
RAMP B	8
RAMP C	8
RAMP D	8
TOTAL	399

PREFORMED PLASTIC PAVEMENT MARKING - LINE 6"	
LOCATION	WHITE
	FOOT
MAINLINE	
EB - ℄ STA. 513+62 TO STA. 649+77.40	3,404
WB - ℄ STA. 518+07.10 TO STA. 650+00	3,298
TOTAL	6,702

TEMPORARY PAINT PAVEMENT MARKING - LINE 6"	
LOCATION	WHITE
	FOOT
MAINLINE	
EB - ℄ STA. 513+62 TO STA. 649+77.4	3,404
WB - ℄ STA. 518+07.1 TO STA. 650+00	3,298
TOTAL	6,702

RAISED REFLECTIVE PAVEMENT MARKER REMOVAL	
LOCATION	EACH
JOBSITE	397
TOTAL	397

TRAFFIC CONTROL

LOCATION	TEMPORARY CONCRETE BARRIER	RELOCATE TEMPORARY CONCRETE BARRIER	PAVEMENT MARKING TAPE TYPE III (4" WHITE)	PAVEMENT MARKING TAPE TYPE III (4" YELLOW)	IMPACT ATTENUATORS, TEMPORARY (NON-REDIRECTIVE), TEST LEVEL 3	IMPACT ATTENUATORS, RELOCATE (NON-REDIRECTIVE), TEST LEVEL 3	IMPACT ATTENUATORS, (NON-REDIRECTIVE), TEST LEVEL 3 (SN 048-0049)	TRAFFIC CONTROL & PROTECTION STD. 701401	TRAFFIC CONTROL & PROTECTION STD. 701411	TRAFFIC CONTROL & PROTECTION STD. 701416	TRAFFIC CONTROL & PROTECTION STD. 701406	TRAFFIC CONTROL & PROTECTION STD. BLR 22	HOT-MIX ASPHALT PAVEMENT (FULL DEPTH) 10"	GEOTECHNICAL FABRIC FOR GROUND STABILIZATION	SUB-BASE GRANULAR MATERIAL, TYPE B 4"	ROCK FILL	POROUS GRANULAR EMBANKMENT	BITUMINOUS MATERIALS (PRIME COAT 0.00038 TON/SQ. YD)
	FOOT				EACH						L SUM		SQ YD		TON			
I-74 OVER TR 205																		
STAGE 1	1092		7634	7634	1			1		1			4269	4733	1186	5778	2023	3.3
STAGE 2		1044	7485	7485		1		1		1								
ROADWAY							2	4	1		1	1						
TOTAL	1092	1044	15119	15119	1	1	2	6	1	2	2	2	4269	4733	1186	5778	2023	3.3

EARTHWORK

STAGE	EARTH EXCAVATION	EARTH EXCAVATION (ROCKFILL)	EMBANKMENT	EARTH EXCAVATION ADJ. FOR SHRINKAGE	FURNISHED EXCAVATION WASTE (+) SHORTAGE (-)
	CU YD				
STAGE 1 STA. 11+60.00 TO STA. 28+50.29	1229	0	5933	922	-5011
STAGE 2 STA. 11+60.00 TO STA. 28+50.29	0	0	0	0	0
STAGE 3 STA. 11+60.00 TO STA. 28+50.29	5933	4384	52	7738	+7686
TOTAL	7162	4384	5985	8660	+2675

NOTE: EARTHWORK WILL BE PAID FOR AS EARTH EXCAVATION - 7162 CU YD;
EARTH EXCAVATION (ROCKFILL) - 4384 CU YD AND FURNISHED EXCAVATION - 5011 CU YD

PIPE CULVERTS, CLASS A, TYPE 1 12" (TEMPORARY)

LOCATION	FOOT
STAGE 1	
15+32.55 RT.	16.9
15+32.55 LT.	16.9
24+77.66 RT.	16.7
24+77.66 LT.	21.7
26+06.58 RT.	13.3
26+06.58 LT.	16.2
SUB-TOTAL	101.7
TOTAL	102

EROSION CONTROL

LOCATION	SEEDING CLASS 2A	MULCH, METHOD 1	EROSION CONTROL BLANKET	TOPSOIL FURNISH AND PLACE, 4"	NITROGEN FERTILIZER NUTRIENT	PHOSPHORUS FERTILIZER NUTRIENT	POTASSIUM FERTILIZER NUTRIENT
STATION TO STATION	ACRE		SQ YD		POUND		
I-74 OVER TR 205							
561+60 TO 569+96	1.25		5691	5691	113	113	113
570+25 TO 578+40	1.25		5592	5592	113	113	113
GRADING AND SHAPING DITCHES							
EB - RT. STA. 622+72.60							
WB - RT. STA. 553+07.40	0.25	0.50			22.5	22.5	22.5
WB - RT. STA. 604+23.40							
WB - RT. STA. 635+03.20							
TOTAL	2.75	0.50	11243	11243	249	249	249

REMOVING MANHOLES

LOCATION	EACH
STAGE 3	
MANHOLES, TYPE A - 4' DIA.	2
MANHOLES, TYPE A - 7' DIA.	3
TOTAL	5

CONCRETE HEADWALL FOR PIPE DRAINS

LOCATION	EACH
STAGE 3	
STA. 575+97.63, 14.2' LT.	1
STA. 576+01.54, 15.0' RT.	1
TOTAL	2

WORK ZONE

LOCATION	TRAFFIC CONTROL SURVEILLANCE	WORK ZONE PAVEMENT MARKING REMOVAL
	CAL DAY	SQ FT
STAGE 1	20	5090
STAGE 2	20	4990
STAGE 3	5	
TOTAL	45	10080

TEMPORARY EROSION CONTROL SEEDING

LOCATION	POUND
I-74 OVER TR 205	220
GRADING AND SHAPING DITCHES	25
TOTAL	245

PIPE CULVERTS, CLASS A, TYPE 1 18" (TEMPORARY)

LOCATION	FOOT
STAGE 1	
13+50.00 LT. TO 15+32.55 LT.	182.8
15+32.55 LT. TO 17+50.00 RT.	218.1
22+53.36 RT. TO 24+77.66 RT.	227.8
24+77.66 RT. TO 26+06.58 LT.	130.4
26+06.58 LT. TO 28+00.00 LT.	191.1
SUB-TOTAL	950.2
TOTAL	950

INLET AND PIPE PROTECTION

LOCATION	EACH
STAGE 1	
STA. 17+50.00 RT.	1
STA. 28+00.00 LT.	1
FINAL CONDITION	
STA. 571+50.8	1
TOTAL	3

TEMPORARY DITCH CHECKS

LOCATION	EACH
I-74 OVER TR 205	
STA. 562+50 TO STA. 568+50	7
STA. 571+25 TO STA. 577+50	8
GRADING AND SHAPING DITCHES	
EB - RT. STA. 622+72.60	10
WB - RT. STA. 553+07.40	15
WB - RT. STA. 604+23.40	10
WB - RT. STA. 635+03.20	10
TOTAL	60

CONSTRUCTION LAYOUT

LOCATION	L SUM
JOBSITE	1
TOTAL	1

PERIMETER EROSION BARRIER

LOCATION	FOOT
561+60 TO 569+90 LT.	830
561+60 TO 569+96 RT.	836
570+25 TO 578+40 LT.	815
570+30 TO 578+40 RT.	810
TOTAL	3291

PAVEMENT REMOVAL

LOCATION	SQ YD
STAGE 3	4269
TOTAL	4269

WIDE LOAD SIGNING

LOCATION	L SUM
STAGE 1 & 2	1
TOTAL	1

CHANGEABLE MESSAGE SIGN

LOCATION	CAL MO
STAGE 1	
EAST APPROACH	4
WEST APPROACH	4
STAGE 2	
EAST APPROACH	4
WEST APPROACH	4
TOTAL	16

MANHOLES, TYPE A, 4'-DIAMETER, TYPE 1 FRAME, CLOSED LID

LOCATION	EACH
STAGE 1	
26+02.28; 35.42' LT.	1
26+10.11; 7.08' LT.	1
TOTAL	2

PIPE CULVERT REMOVAL

LOCATION	FOOT
STAGE 3	
12" DIA. CULVERTS (TEMPORARY)	101.7
18" DIA. CULVERTS (TEMPORARY)	950.2
SUB-TOTAL	1051.9
TOTAL	1052

MANHOLES, TYPE A, 7'-DIAMETER, TYPE 1 FRAME, CLOSED LID

LOCATION	EACH
STAGE 1	
15+32.55; 0.8' LT.	1
24+77.66; 2.7' RT.	1
26+06.58; 19.9' LT.	1
TOTAL	3

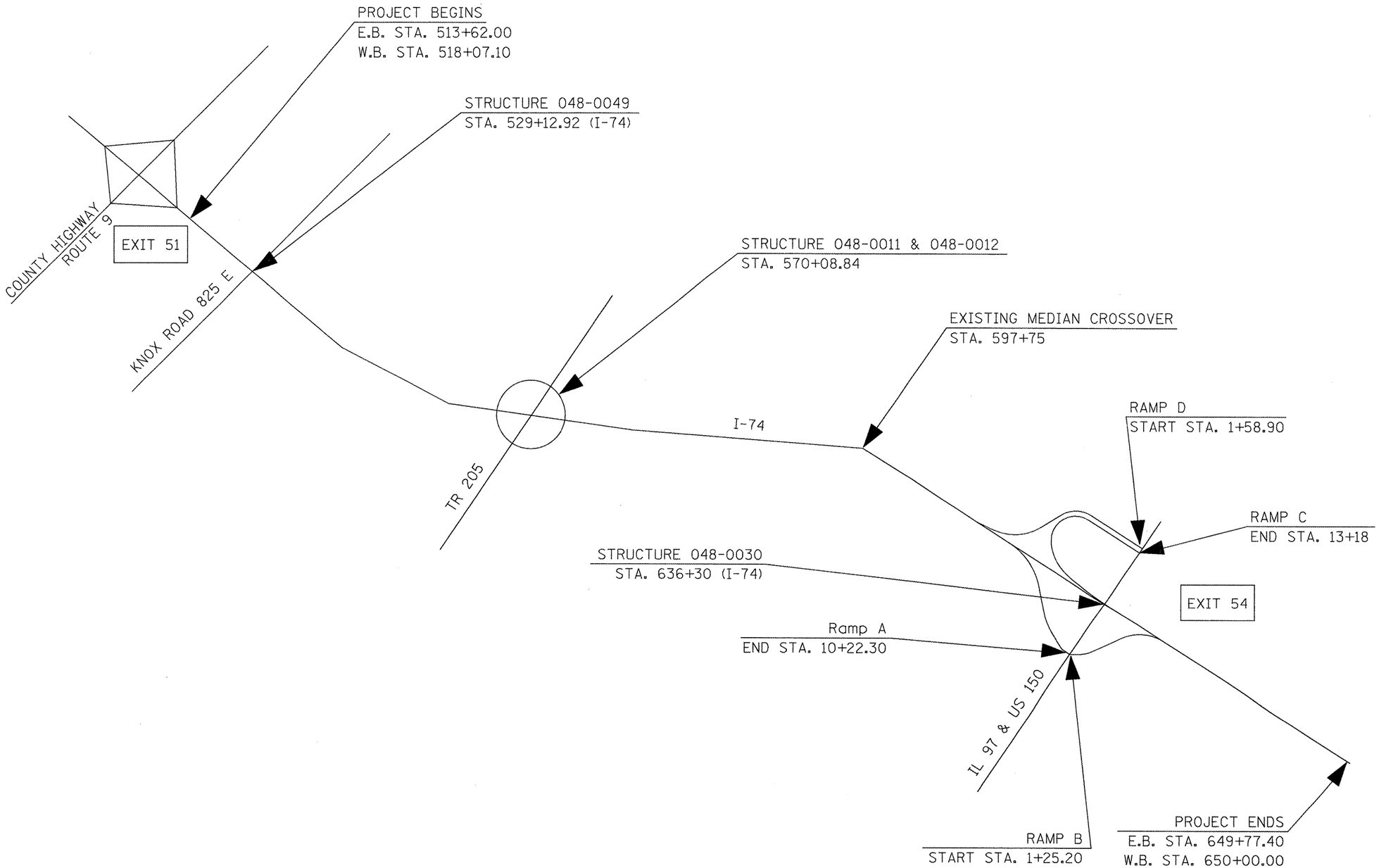

FILE NAME = 68602 PLANS .dgn	USER NAME = toroja	DESIGNED -	REVISED -	STATE OF ILLINOIS DEPARTMENT OF TRANSPORTATION	LINE DIAGRAM	F.A.I. RTE.	SECTION	COUNTY	TOTAL SHEETS	SHEET NO.
		DRAWN -	REVISED -			74	48(27RS-3; (27HB-5)I, I-1)	KNOX	104	20
	PLOT SCALE = 40.0000 ' / IN.	CHECKED -	REVISED -					CONTRACT NO. 68062		
	PLOT DATE = 12/12/2008	DATE -	REVISED -		SCALE: SHEET NO. 1 OF 1 SHEETS STA. TO STA.	FED. ROAD DIST. NO.	ILLINOIS	FED. AID PROJECT		

NOTE: NOT DRAWN TO SCALE. FOR ILLUSTRATION PURPOSES ONLY.

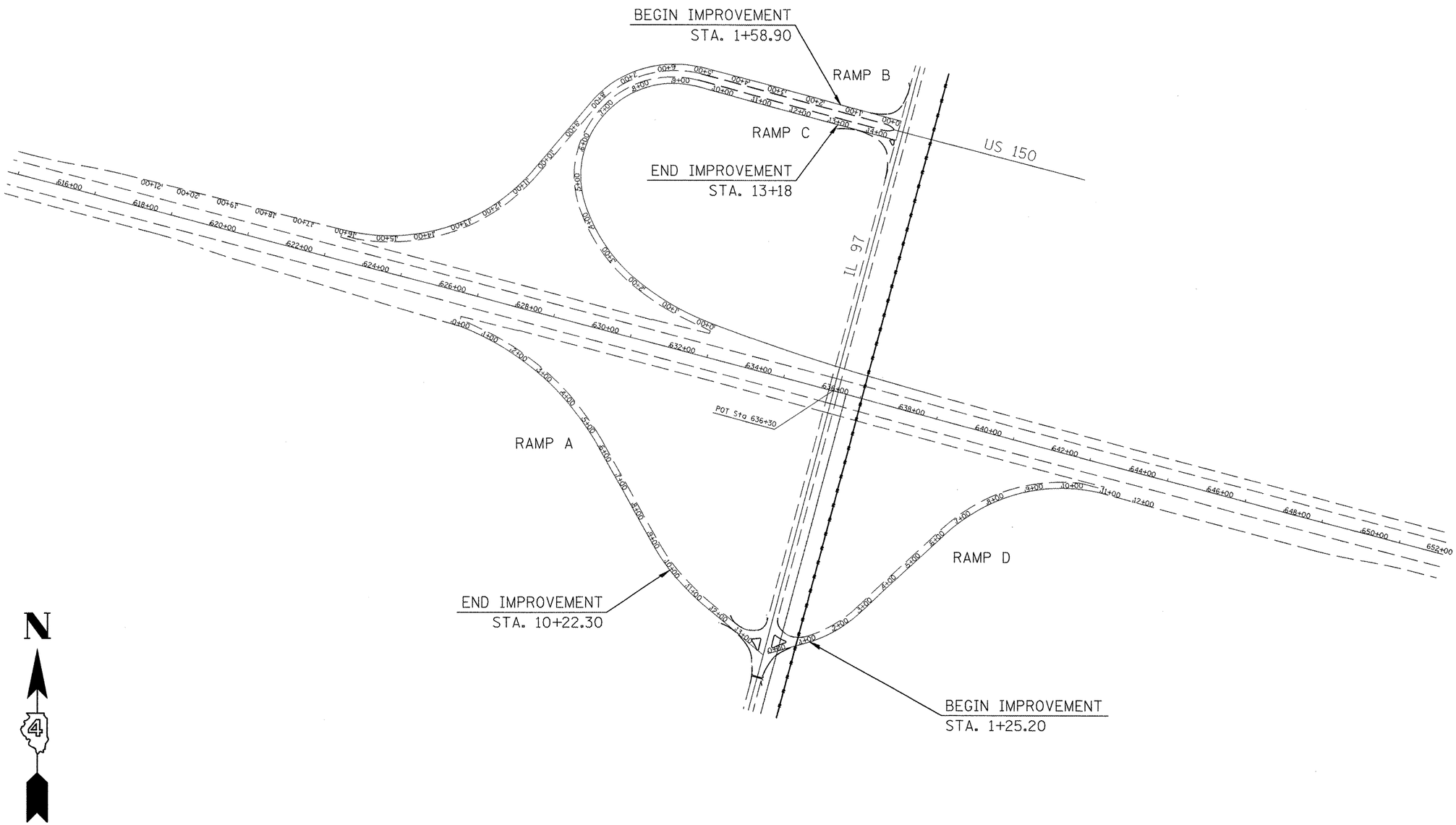

FILE NAME = 68602 PLANS .dgn	USER NAME = toroja	DESIGNED -	REVISED -	STATE OF ILLINOIS DEPARTMENT OF TRANSPORTATION	EXISTING RAMP CONFIGURATION	F.A.I. RTE.	SECTION	COUNTY	TOTAL SHEETS	SHEET NO.
		DRAWN -	REVISED -			74	48(27RS-3; (27HB-5)I, I-1)	KNOX	104	21
	PLOT SCALE = 40.0000 ' / IN.	CHECKED -	REVISED -					CONTRACT NO. 68062		
	PLOT DATE = 12/12/2008	DATE -	REVISED -		SCALE: SHEET NO. 1 OF 4 SHEETS STA. TO STA.	FED. ROAD DIST. NO.	ILLINOIS	FED. AID PROJECT		

NOTE: NOT DRAWN TO SCALE. FOR ILLUSTRATION PURPOSES ONLY.

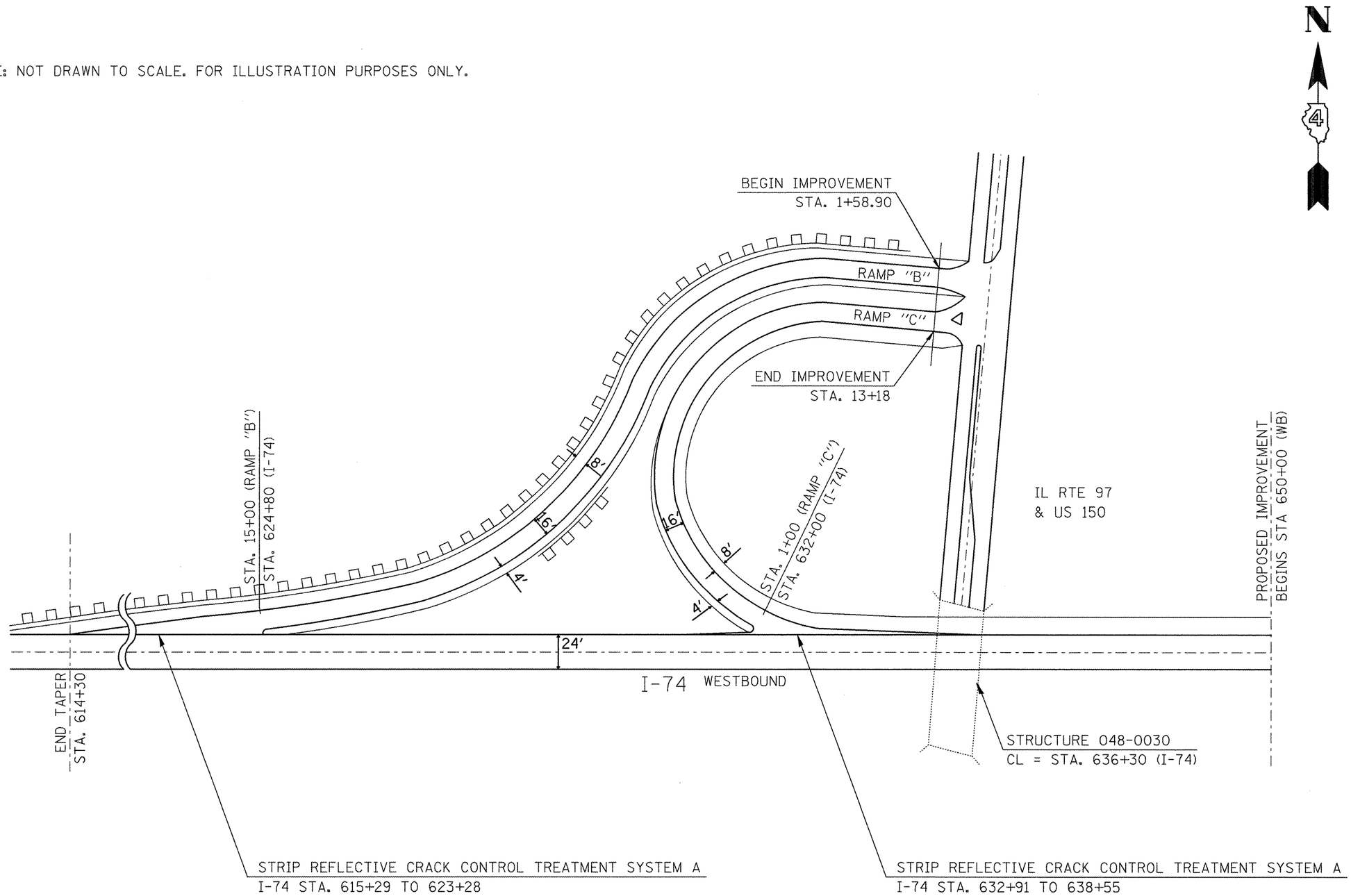

FILE NAME = 68602 PLANS .dgn	USER NAME = taraja	DESIGNED -	REVISED -	STATE OF ILLINOIS DEPARTMENT OF TRANSPORTATION	RAMP DETAILS	F.A.I. RTE.	SECTION	COUNTY	TOTAL SHEETS	SHEET NO.
		DRAWN -	REVISED -			74	48(27RS-3; (27HB-5)I, I-1)	KNOX	104	22
	PLOT SCALE = 40.0000 ' / IN.	CHECKED -	REVISED -					CONTRACT NO. 68062		
	PLOT DATE = 12/12/2008	DATE -	REVISED -		SCALE: SHEET NO. 2 OF 4 SHEETS STA. TO STA.	FED. ROAD DIST. NO.	ILLINOIS	FED. AID PROJECT		

NOTE: NOT DRAWN TO SCALE. FOR ILLUSTRATION PURPOSES ONLY.

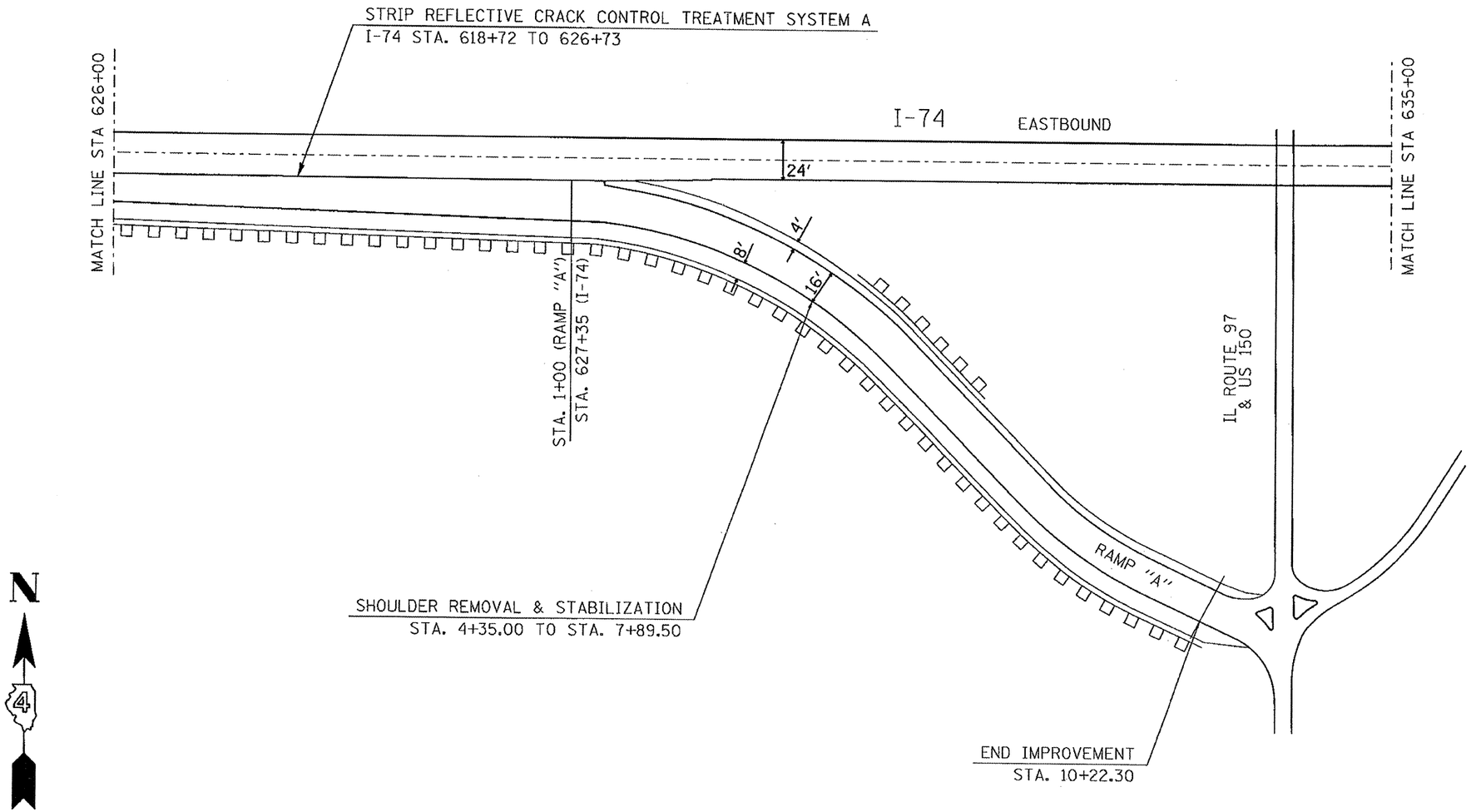

FILE NAME = 68062 PLANS - Reviewed sheets as 01-02-09.dgn	USER NAME = koroja	DESIGNED -	REVISED -	STATE OF ILLINOIS DEPARTMENT OF TRANSPORTATION	RAMP DETAILS	F.A.I. RTE.	SECTION	COUNTY	TOTAL SHEETS	SHEET NO.
	PLOT SCALE = 40.0000 ' / IN.	DRAWN -	REVISED -			74	48(27RS-3); (27HB-5)I, I-1)	KNOX	104	23
	PLOT DATE = 1/2/2009	CHECKED -	REVISED -					CONTRACT NO. 68062		
		DATE -	REVISED -		SCALE: SHEET NO. 3 OF 4 SHEETS STA. TO STA.	FED. ROAD DIST. NO.	ILLINOIS	FED. AID PROJECT		

NOTE: NOT DRAWN TO SCALE. FOR ILLUSTRATION PURPOSES ONLY.

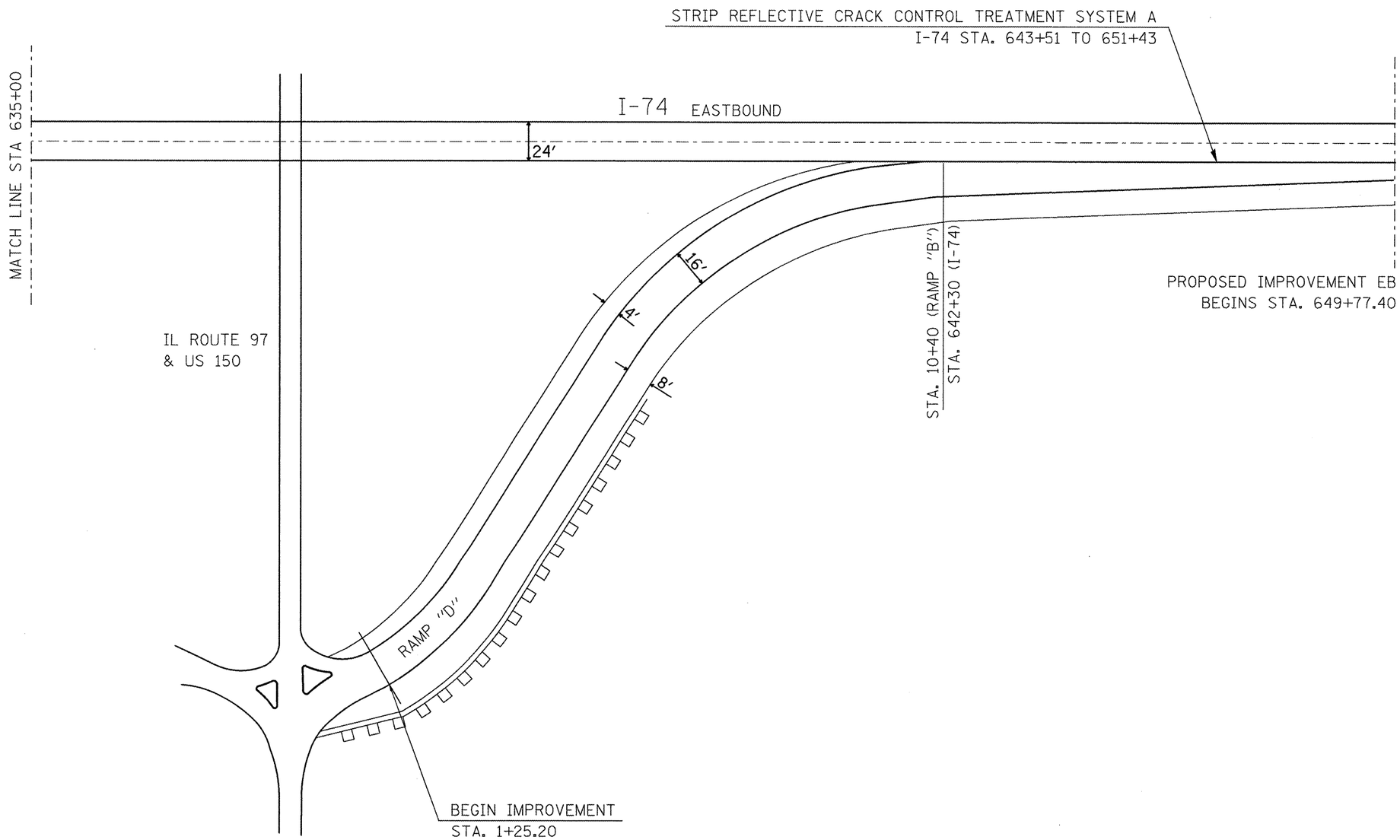

FILE NAME = 68602 PLANS .dgn	USER NAME = toroja	DESIGNED -	REVISED -	STATE OF ILLINOIS DEPARTMENT OF TRANSPORTATION	RAMP DETAILS	F.A.I. RTE.	SECTION	COUNTY	TOTAL SHEETS / SHEET NO.
		DRAWN -	REVISED -			74	48(27RS-3; (27HB-5)I, I-1)	KNOX	104 / 24
	PLOT SCALE = 40.0000 ' / IN.	CHECKED -	REVISED -					CONTRACT NO. 68062	
	PLOT DATE = 12/12/2008	DATE -	REVISED -		SCALE: SHEET NO. 4 OF 4 SHEETS STA. TO STA.	FED. ROAD DIST. NO.	ILLINOIS	FED. AID PROJECT	

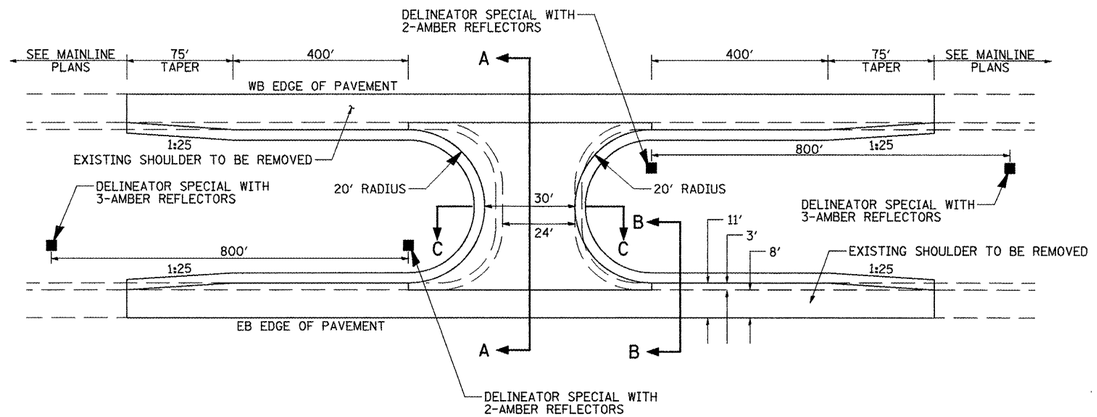

MEDIAN TURNAROUND DETAIL

STATION 597+75

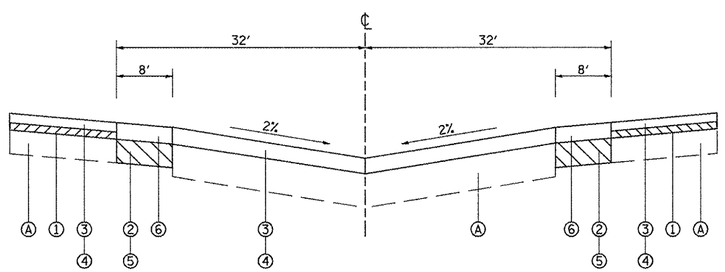

SECTION A-A

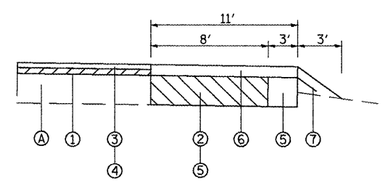

SECTION B-B

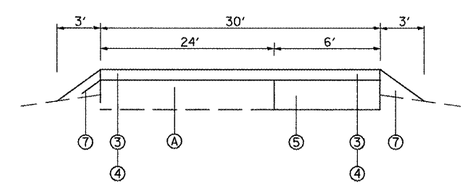

SECTION C-C

LEGEND

- (A) EXISTING PAVEMENT
- (1) PROPOSED HMA SURFACE REMOVAL, 1-1/2″
- (2) PROPOSED SHOULDER REMOVAL
- (3) PROPOSED HMA BINDER COURSE, 2-1/4″
- (4) PROPOSED HMA SURFACE COURSE, 1-1/2″
- (5) PROPOSED HMA BASE COURSE, 8″
- (6) PROPOSED HMA SHOULDER, 3-3/4″
- (7) PROPOSED AGGREGATE SHOULDER, TYPE B

NOTES

1) REMOVAL OF EXISTING AGGREGATE SHOULDERS AND WIDENING EXCAVATION ARE INCIDENTAL TO THE COST OF PROPOSED 8″ HOT-MIX ASPHALT BASE COURSE.

2) OMIT RUMBLE STRIPS ON SHOULDERS WITHIN THESE LIMITS.

FILE NAME = 68602 PLANS .dgn	USER NAME = toroja	DESIGNED -	REVISED -	STATE OF ILLINOIS DEPARTMENT OF TRANSPORTATION	MEDIAN TURNAROUND DETAIL STA. 597+75	F.A.I. RTE.	SECTION	COUNTY	TOTAL SHEETS / SHEET NO.
		DRAWN -	REVISED -			74	48(27RS-3; (27HB-5)I, I-1)	KNOX	104 / 25
	PLOT SCALE = 40.0000 ′ / IN.	CHECKED -	REVISED -					CONTRACT NO. 68062	
	PLOT DATE = 12/12/2008	DATE -	REVISED -		NOT TO SCALE / SHEET NO. 1 OF 1 SHEETS / STA. 597+75	FED. ROAD DIST. NO.	ILLINOIS	FED. AID PROJECT	

LEGEND

SYMBOLS

SIGN

TYPE III BARRICADE WITH
2 FLASHING LIGHTS PER BARRICADE

STANDARD 702001 - TRAFFIC CONTROL DEVICES
("ROAD CLOSED TO ALL TRAFFIC" APPLICATION)

STANDARD 702001 - TRAFFIC CONTROL DEVICES
("ROAD CLOSED TO TRHU TRAFFIC" APPLICATION)

WORK AREA

GENERAL NOTES

1. ALL TRAFFIC CONTROL DEVICES SHALL BE FURNISHED, ERECTED AND MAINTAINED BY THE CONTRACTOR, UNLESS NOTED OTHERWISE.
2. ALL SIGNS NOT ATTACHED TO BARRICADES SHALL BE POST MOUNTED.
3. LOCATIONS OF TRAFFIC CONTROL DEVICES MAY BE ADJUSTED BY THE ENGINEER.
4. ALL TRAFFIC CONTROL SHOWN ON THIS SHEET SHALL BE PAID FOR PER LUMP SUM FOR TRAFFIC CONTROL AND PROTECTION FOR TEMPORARY DETOUR.

DETOUR AHEAD
W20-2-3636
(A)

DETOUR
M4-8-2412
(B)

NORTH
M3-2-2412
(C)

SOUTH
M3-2-2412
(D)

TOWNSHIP ROAD 205
M1-I100-3024
(E)

END DETOUR
M4-8a-2418
(F)

ROAD CLOSED XX MILES
W20-1-3636
(G)

W1-6-2412
(H)

ORIENT SIGN AS DIRECTED BY THE ENGINEER

ROAD CLOSED 500 FT
W20-1-3636
(I)

ROAD CLOSED AHEAD
W20-3-3636
(J)

60"
TR 205 CLOSED TO THRU TRAFFIC
30"
USE 6" 'D' LETTERS
R11-4-6030
(K)

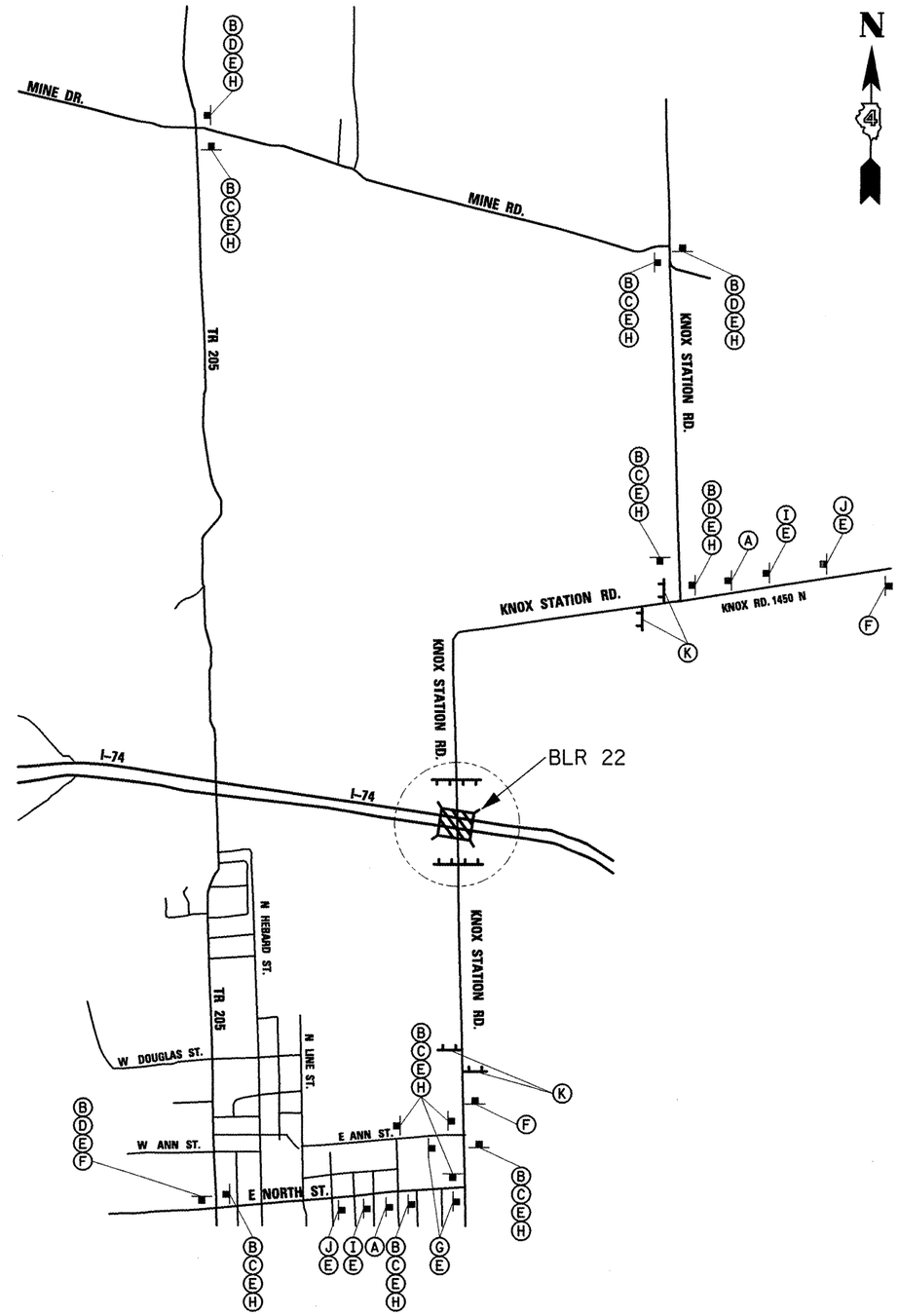

FILE NAME = 68602 PLANS .dgn	USER NAME = toroja	DESIGNED -	REVISED -	STATE OF ILLINOIS DEPARTMENT OF TRANSPORTATION	TRAFFIC CONTROL DETOUR PLAN	F.A.I. RTE.	SECTION	COUNTY	TOTAL SHEETS	SHEET NO.
		DRAWN -	REVISED -			74	48(27RS-3; (27HB-5)I, I-1)	KNOX	104	26
	PLOT SCALE = 40.0000 ' / IN.	CHECKED -	REVISED -					CONTRACT NO. 68062		
	PLOT DATE = 12/12/2008	DATE -	REVISED -		SCALE: SHEET NO. 1 OF 1 SHEETS STA. TO STA.	FED. ROAD DIST. NO.	ILLINOIS	FED. AID PROJECT		

STAGE I:
1. CONSTRUCT I-74 EB CROSSOVER TO I-74 WB, AND I-74 WB CROSSOVER TO I-74 EB (STAGE 2 CROSSOVER) IN ACCORDANCE WITH HIGHWAY STANDARDS 701400, 701401, 701402, 701416, AND AS SHOWN IN THE PLANS.
2. REMOVE EXISTING HEADWALLS FOR PIPE DRAINS AT STA. 26+02.28 LT. AND STA. 26+10.11 LT. CONSTRUCT TEMPORARY DRAINAGE AT LOCATIONS AS SHOWN IN THE PLANS. TEMPORARY DRAINAGE CONFIGURATION TO REMAIN IN PLACE THROUGH STAGE 2.
3. PERFORM SUPERSTRUCTURE REPLACEMENT ON I-74 EB OVER TR 205 (S.N. 048-0012).

[A] PIPE CULVERTS, CLASS A, TYPE I 18" (TEMPORARY)
STA. 13+50.00, 28.8' LT.; D.S. ℄ ELEV. = 745.00 TO
STA. 15+32.55, 0.8' LT.; U.S. ℄ ELEV. = 745.57
LENGTH = 182.8'; SLOPE = +0.31%

[B] PIPE CULVERTS, CLASS A, TYPE I 18" (TEMPORARY)
STA. 15+32.55, 0.8' LT.; D.S. ℄ ELEV. = 745.57 TO
STA. 17+50.00, 30.5' RT.; U.S. ℄ ELEV. = 746.25
LENGTH = 218.1'; SLOPE = +0.31%

[C] PIPE CULVERTS, CLASS A, TYPE I 12" (TEMPORARY)
STA. 15+32.55, 16.0' RT.; U.S. ℄ ELEV. = 745.97 TO
STA. 15+32.55, 0.8' LT.; D.S. ℄ ELEV. = 745.57
LENGTH = 16.9'; SLOPE = -2.37%

[D] PROPOSED MANHOLE, TYPE A WITH
TYPE 1 FRAME & CLOSED LID
7' DIA. (FLAT SLAB TOP)
STA. 15+32.55, 0.8' LT.
RIM ELEV. = 748.12

[E] PIPE CULVERTS, CLASS A, TYPE I 12" (TEMPORARY)
STA. 15+32.55, 17.7' LT.; U.S. ℄ ELEV. = 746.31 TO
STA. 15+32.55, 0.8' LT.; D.S. ℄ ELEV. = 745.57
LENGTH = 16.9'; SLOPE = -4.38%

N

50 25 0 50 100
SCALE IN FEET

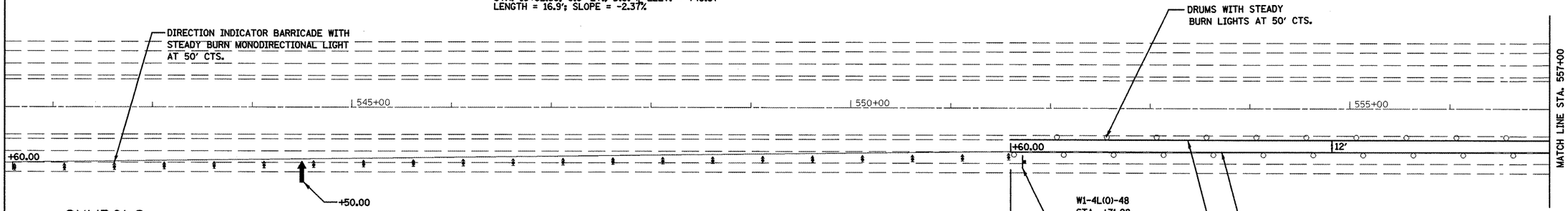

SYMBOLS

- ARROW BOARD
- WORK AREA
- SIGN
- DIRECTION INDICATOR BARRICADE WITH STEADY BURN MONODIRECTIONAL LIGHT
- TYPE II BARRICADE WITH STEADY BURN MONODIRECTIONAL LIGHT
- DRUM WITH STEADY BURN MONODIRECTIONAL LIGHT
- VERTICAL PANEL (BACK TO BACK)
- TYPE III BARRICADE WITH FLASHING LIGHTS
- TEMPORARY CONCRETE BARRIER
- BIDIRECTIONAL BARRIER MARKER
- IMPACT ATTENUATOR

PROP. CURVE STG-1-1
PI STA. = 13+46.92
Δ = 11° 37' 57" (LT)
D = 3° 07' 21"
R = 1,835.00'
T = 186.92'
L = 372.55'
E = 9.50'
e = SEE TRANSITION TABLE
T.R. = _____
S.E. RUN = _____
P.C. STA. = 11+60.00
P.T. STA. = 15+32.55

END WORK ZONE SPEED LIMIT
G20-1103(O)-3660

PROP. CURVE STG-1-2
PI STA. = 17+19.47
Δ = 11° 37' 57" (RT)
D = 3° 07' 21"
R = 1,835.00'
T = 186.92'
L = 372.55'
E = 9.50'
e = SEE TRANSITION TABLE
T.R. = _____
S.E. RUN = _____
P.C. STA. = 15+32.55
P.T. STA. = 19+05.11

N

50 25 0 50 100
SCALE IN FEET

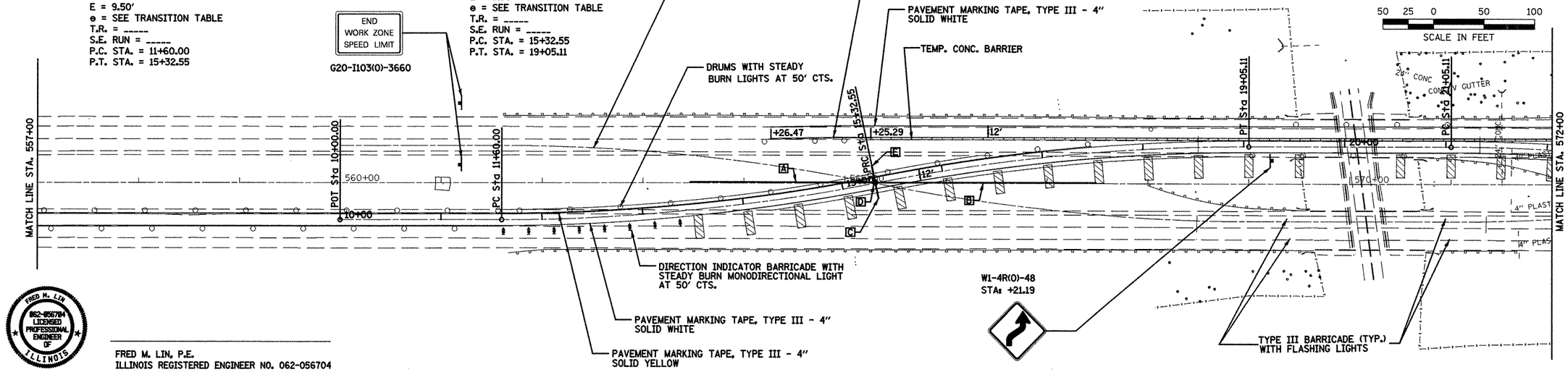

FRED M. LIN
062-056704
LICENSED PROFESSIONAL ENGINEER OF ILLINOIS
SEAL

FRED M. LIN, P.E.
ILLINOIS REGISTERED ENGINEER NO. 062-056704
REGISTRATION EXPIRES NOV. 30, 2009

FILE NAME = 0101-MOT.dgn	USER NAME = toroja	DESIGNED - OWR	REVISED - N/A
		DRAWN - OWR	REVISED - N/A
	PLOT SCALE = 100.00 ' / IN.	CHECKED - FML	REVISED - N/A
	PLOT DATE = 12/12/2008	DATE - 11/2008	REVISED - N/A

STATE OF ILLINOIS
DEPARTMENT OF TRANSPORTATION

MAINTENANCE OF TRAFFIC STAGE 1
I-74 OVER TOWNSHIP ROAD 205

SCALE: 1" = 50' | SHEET NO. -- OF-- SHEETS | STA. 532+00.00 TO STA. 590+88.88

F.A.I. RTE.	SECTION	COUNTY	TOTAL SHEETS	SHEET NO.
74	48(27RS-3); (27HB-5)I, I-1	KNOX	104	27

CONTRACT NO. 68062
FED. ROAD DIST. NO. | ILLINOIS | FED. AID PROJECT

PROP. CURVE STG-1-3
PI STA. = 22+92.03
Δ = 11° 37′ 57″ (RT)
D = 3° 07′ 21″
R = 1,835.00′
T = 186.92′
L = 372.55′
E = 9.50′
e = SEE TRANSITION TABLE
T.R. = _____
S.E. RUN = _____
P.C. STA. = 21+05.11
P.T. STA. = 24+77.66

PROP. CURVE STG-1-4
PI STA. = 26+64.58
Δ = 11° 37′ 57″ (LT)
D = 3° 07′ 21″
R = 1,835.00′
T = 186.92′
L = 372.55′
E = 9.50′
e = SEE TRANSITION TABLE
T.R. = _____
S.E. RUN = _____
P.C. STA. = 24+77.66
P.T. STA. = 28+50.22

EXIST. CURVE I-74-1
PI STA. = 581+98.11
Δ = 1° 46′ 32″ (RT)
D = 1° 18′ 56″
R = 4,355.00′
T = 67.48′
L = 134.96′
E = 0.52′
e = _____
T.R. = _____
S.E. RUN = _____
P.C. STA. = 581+30.62
P.T. STA. = 582+65.58

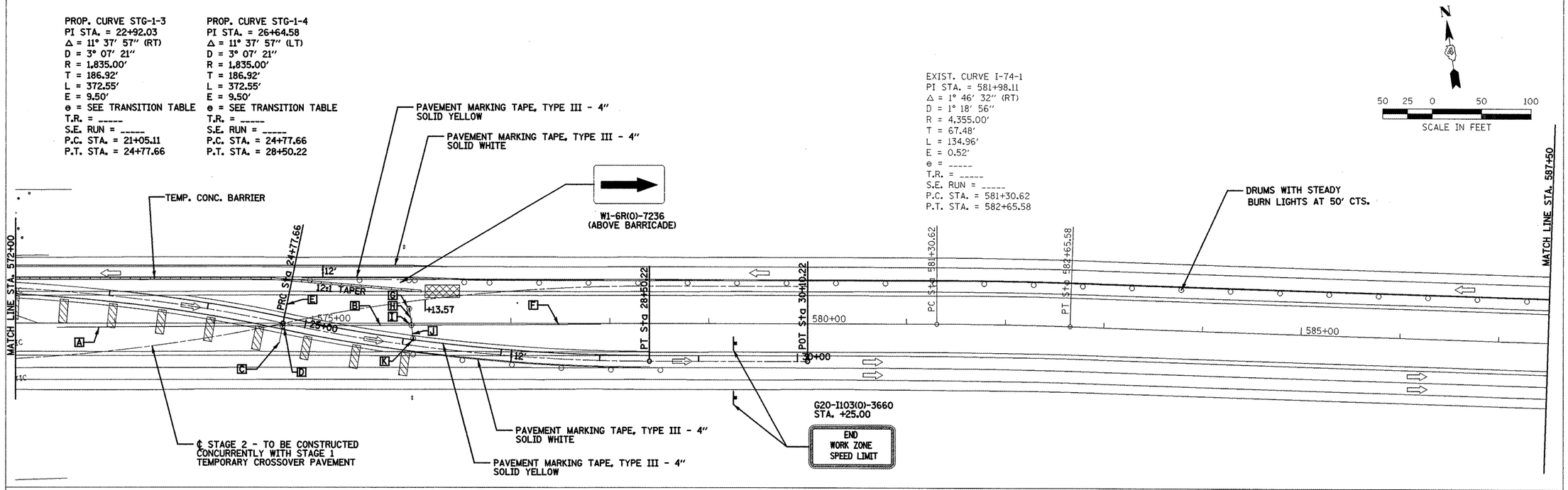

A PIPE CULVERTS, CLASS A, TYPE I 18″ (TEMPORARY)
STA. 22+53.36, 36.1′ RT.; D.S. ℄ ELEV. = 746.53 TO
STA. 24+77.66, 2.7′ RT.; U.S. ℄ ELEV. = 747.54
LENGTH = 227.8′; SLOPE = +0.44%

B PIPE CULVERTS, CLASS A, TYPE I 18″ (TEMPORARY)
STA. 24+77.66, 2.7′ RT.; D.S. ℄ ELEV. = 747.54 TO
STA. 26+06.58, 19.9′ LT.; U.S. ℄ ELEV. = 748.11
LENGTH = 130.4′; SLOPE = +0.44

C PIPE CULVERTS, CLASS A, TYPE I 12″ (TEMPORARY)
STA. 24+77.66, 19.4′ RT.; U.S. ℄ ELEV. = 750.33 TO
STA. 24+77.66, 2.7′ RT.; D.S. ℄ ELEV. = 747.54
LENGTH = 16.7′; SLOPE = -16.71%

D PROPOSED MANHOLE, TYPE A WITH
TYPE 1 FRAME & CLOSED LID
7′ DIA. (FLAT SLAB TOP)
STA. 24+77.66, 2.7′ RT.
RIM ELEV. = 752.02

E PIPE CULVERTS, CLASS A, TYPE I 12″ (TEMPORARY)
STA. 24+77.66, 19.0′ LT.; U.S. ℄ ELEV. = 750.37 TO
STA. 24+77.66, 2.7′ RT.; D.S. ℄ ELEV. = 747.54
LENGTH = 21.7′; SLOPE = -13.04%

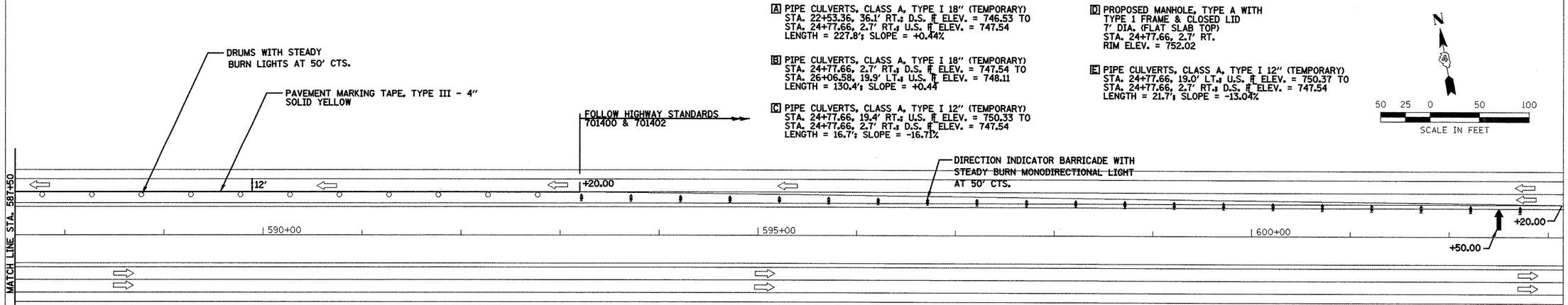

SYMBOLS

- ARROW BOARD
- WORK AREA
- SIGN
- DIRECTION INDICATOR BARRICADE WITH STEADY BURN MONODIRECTIONAL LIGHT
- TYPE II BARRICADE WITH STEADY BURN MONODIRECTIONAL LIGHT
- DRUM WITH STEADY BURN MONODIRECTIONAL LIGHT
- VERTICAL PANEL (BACK TO BACK)
- TYPE III BARRICADE WITH FLASHING LIGHTS
- TEMPORARY CONCRETE BARRIER
- BIDIRECTIONAL BARRIER MARKER
- IMPACT ATTENUATOR

F PIPE CULVERTS, CLASS A, TYPE I 18″ (TEMPORARY)
STA. 26+06.58, 19.9′ LT.; D.S. ℄ ELEV. = 748.11
STA. 28+00.00, 36.3′ LT.; U.S. ℄ ELEV. = 748.97
LENGTH = 191.1′; SLOPE = +0.45%

G PROPOSED MANHOLE, TYPE A WITH TYPE 1 FR & CL
4′ DIA. WITH FLAT SLAB TOP
STA. 26+02.28, 35.42′ LT.; RIM ELEV. = 752.45

H PIPE CULVERTS, CLASS A, TYPE I 12″ (TEMPORARY)
STA. 26+02.28, 35.42′ LT.; U.S. ELEV. = MATCH EXISTING
STA. 26+06.58, 19.9′ LT.; D.S. ℄ ELEV. = 748.11
LENGTH = 16.2′

I PROPOSED MANHOLE, TYPE A WITH TYPE 1 FR & CL
7′ DIA. WITH FLAT SLAB TOP
STA. 26+06.58, 19.9′ LT.; RIM ELEV. = 751.85

J PIPE CULVERTS, CLASS A, TYPE I 12″ (TEMPORARY)
STA. 26+10.11, 7.08′ LT.; U.S. ELEV. = MATCH EXISTING
STA. 26+06.58, 19.9′ LT.; D.S. ℄ ELEV. = 748.11
LENGTH = 13.3′

K PROPOSED MANHOLE, TYPE A WITH TYPE 1 FR & CL
4′ DIA. WITH FLAT SLAB TOP
STA. 26+10.11, 7.08′ LT.; RIM ELEV. = 752.31

FILE NAME = 0102-MOT.dgn	USER NAME = toroja	DESIGNED - OWR	REVISED - N/A
		DRAWN - OWR	REVISED - N/A
	PLOT SCALE = 100.00 ′ / IN.	CHECKED - FML	REVISED - N/A
	PLOT DATE = 12/12/2008	DATE - 11/2008	REVISED - N/A

STATE OF ILLINOIS
DEPARTMENT OF TRANSPORTATION

MAINTENANCE OF TRAFFIC STAGE 1
I-74 OVER TOWNSHIP ROAD 205

SCALE: 1″ = 50′ | SHEET NO. -- OF -- SHEETS | STA. 532+00.00 TO STA. 590+88.88

F.A.I. RTE.	SECTION	COUNTY	TOTAL SHEETS	SHEET NO.
74	48(2TRS-3); (2THB-5)I, I-1	KNOX	104	28

CONTRACT NO. 68062

FED. ROAD DIST. NO. | ILLINOIS | FED. AID PROJECT

PROP. CURVE STG-1-1
PI STA. = 13+46.92
Δ = 11° 37′ 57″ (LT)
D = 3° 07′ 21″
R = 1,835.00′
T = 186.92′
L = 372.55′
E = 9.50′
e = SEE TRANSITION TABLE
T.R. = _____
S.E. RUN = _____
P.C. STA. = 11+60.00
P.T. STA. = 15+32.55

PROP. CURVE STG-1-2
PI STA. = 17+19.47
Δ = 11° 37′ 57″ (RT)
D = 3° 07′ 21″
R = 1,835.00′
T = 186.92′
L = 372.55′
E = 9.50′
e = SEE TRANSITION TABLE
T.R. = _____
S.E. RUN = _____
P.C. STA. = 15+32.55
P.T. STA. = 19+05.11

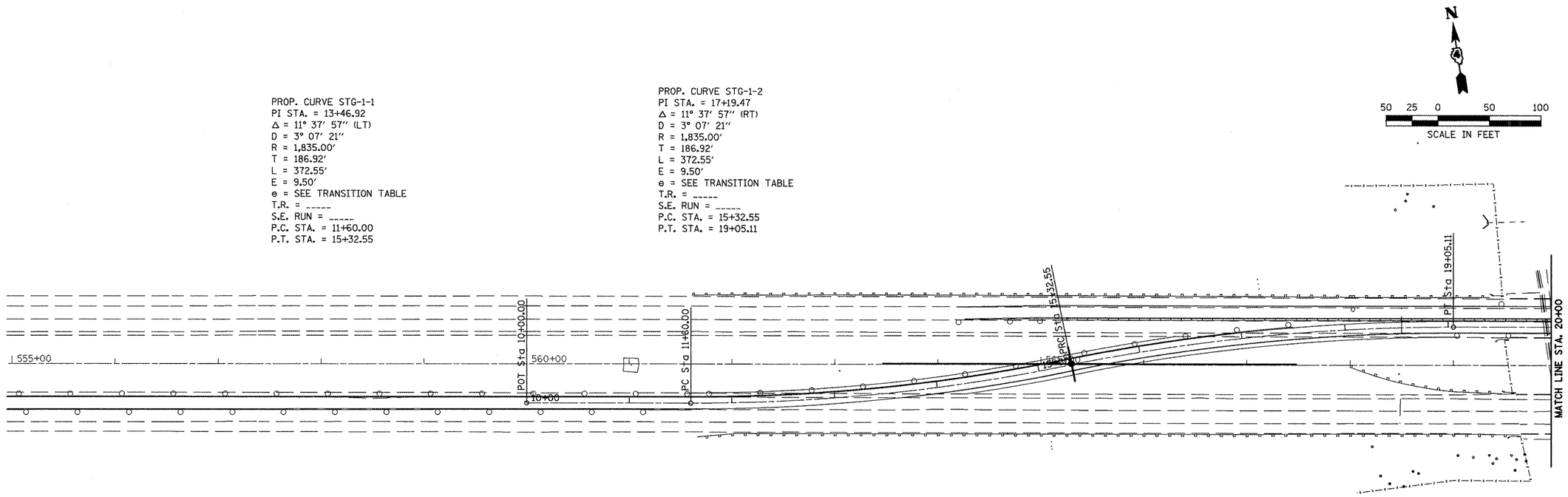

PAVEMENT CROSS SLOPE TRANSITION TABLE

STA. 11+60.00 TO STA. 14+09.61	1.5%
STA. 14+09.61 TO STA. 15+32.55	1.5% TO 0.0%
STA. 15+32.55 TO STA. 16+55.49	0.0% TO 1.5%
STA. 16+55.49 TO STA. 19+05.11	1.5%

ADJUST SUPERELEVATION TRANSITION LIMITS IN THE FIELD TO PROVIDE FOR SMOOTH TRANSITION BETWEEN STAGE 1 AND STAGE 2 TEMPORARY PAVEMENT BEING CONSTRUCTED CONCURRENTLY. THE ENGINEER SHALL REVIEW AND APPROVE ALL FIELD ADJUSTMENTS PRIOR TO PLACEMENT.

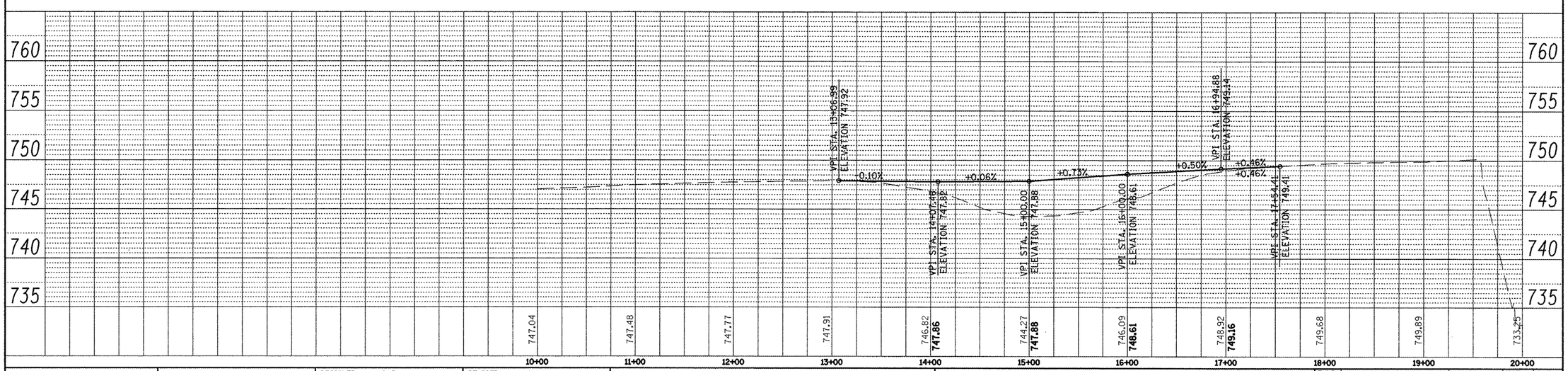

PLAN
SURVEYED
PLOTTED
ROADWAY CHECKED
RT. OF WAY CHECKED
CADD FILE NAME
NOTE BOOK
NO. _____
BY
DATE

PROFILE
SURVEYED
PLOTTED
ROADWAY CHECKED
B.M. NOTED
STRUCTURE NOTATIONS CHKD
NOTE BOOK
NO. _____
BY
DATE

FILE NAME = 0103-MOT.dgn	USER NAME = toroja	DESIGNED - OWR	REVISED - N/A	STATE OF ILLINOIS DEPARTMENT OF TRANSPORTATION	MAINTENANCE OF TRAFFIC PLAN & PROFILE STAGE 1 I-74 OVER TOWNSHIP ROAD 205
		DRAWN - OWR	REVISED - N/A		
	PLOT SCALE = 100.00 ′ / IN.	CHECKED - FML	REVISED - N/A		
	PLOT DATE = 12/12/2008	DATE - 11/2008	REVISED - N/A		1"= 50′ H & 5′ V · SHEET NO. -- OF -- SHEETS · STA. 00+00.00 TO STA. 00+00.00

F.A.I RTE.	SECTION	COUNTY	TOTAL SHEETS	SHEET NO.
74	48(27RS-3)2 (27HB-5)I, I-1	KNOX	104	29
		CONTRACT NO. 68062		
FED. ROAD DIST. NO.	ILLINOIS	FED. AID PROJECT		

PROP. CURVE STG-1-3
PI STA. = 22+92.03
Δ = 11° 37′ 57″ (RT)
D = 3° 07′ 21″
R = 1,835.00′
T = 186.92′
L = 372.55′
E = 9.50′
e = SEE TRANSITION TABLE
T.R. = _____
S.E. RUN = _____
P.C. STA. = 21+05.11
P.T. STA. = 24+77.66

PROP. CURVE STG-1-4
PI STA. = 26+64.58
Δ = 11° 37′ 57″ (LT)
D = 3° 07′ 21″
R = 1,835.00′
T = 186.92′
L = 372.55′
E = 9.50′
e = SEE TRANSITION TABLE
T.R. = _____
S.E. RUN = _____
P.C. STA. = 24+77.66
P.T. STA. = 28+50.22

EXIST. CURVE I-74-1
PI STA. = 581+98.11
Δ = 1° 46′ 32″ (RT)
D = 1° 18′ 56″
R = 4,355.00′
T = 67.48′
L = 134.96′
E = 0.52′
e = _____
T.R. = _____
S.E. RUN = _____
P.C. STA. = 581+30.62
P.T. STA. = 582+65.58

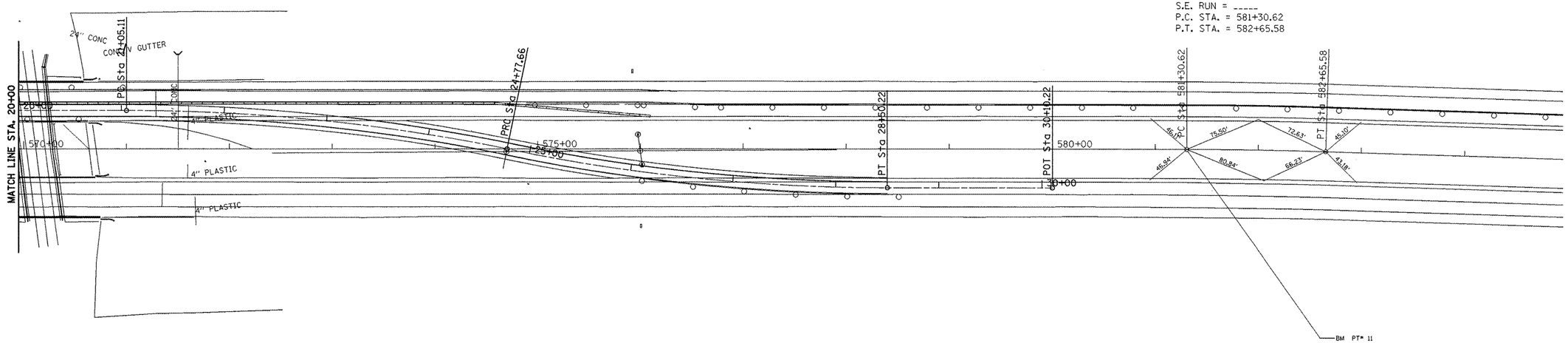

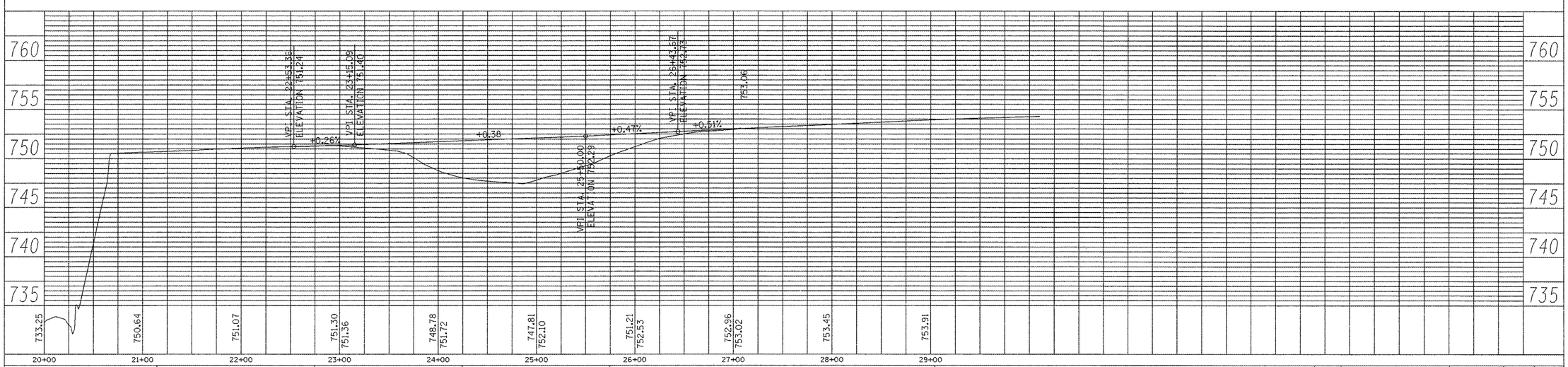

PLAN
NOTE BOOK NO. ____
SURVEYED ____
PLOTTED ____
ALIGNMENT CHECKED ____
RT. OF WAY STAKED ____
CAD FILE NAME ____
BY | DATE

PROFILE
NOTE BOOK NO. ____
SURVEYED ____
PLOTTED ____
GRADES CHECKED ____
B.M. NOTED ____
CROSS SECTIONS NOTED ____
BY | DATE

FILE NAME = 0104-MOT.dgn	USER NAME = toroja	DESIGNED - OWR	REVISED - N/A
		DRAWN - OWR	REVISED - N/A
	PLOT SCALE = 100.00 ′ / IN.	CHECKED - FML	REVISED - N/A
	PLOT DATE = 12/12/2008	DATE - 11/2008	REVISED - N/A

STATE OF ILLINOIS
DEPARTMENT OF TRANSPORTATION

MAINTENANCE OF TRAFFIC PLAN & PROFILE STAGE 1
I-74 OVER TOWNSHIP ROAD 205

1″= 50′ H & 5′ V | SHEET NO. -- OF -- SHEETS | STA. 00+00.00 TO STA. 00+00.00

F.A.I RTE.	SECTION	COUNTY	TOTAL SHEETS	SHEET NO.
74	48(27RS-3); (27HB-5)I, I-1	KNOX	104	30
		CONTRACT NO. 68062		
FED. ROAD DIST. NO.	ILLINOIS	FED. AID PROJECT		

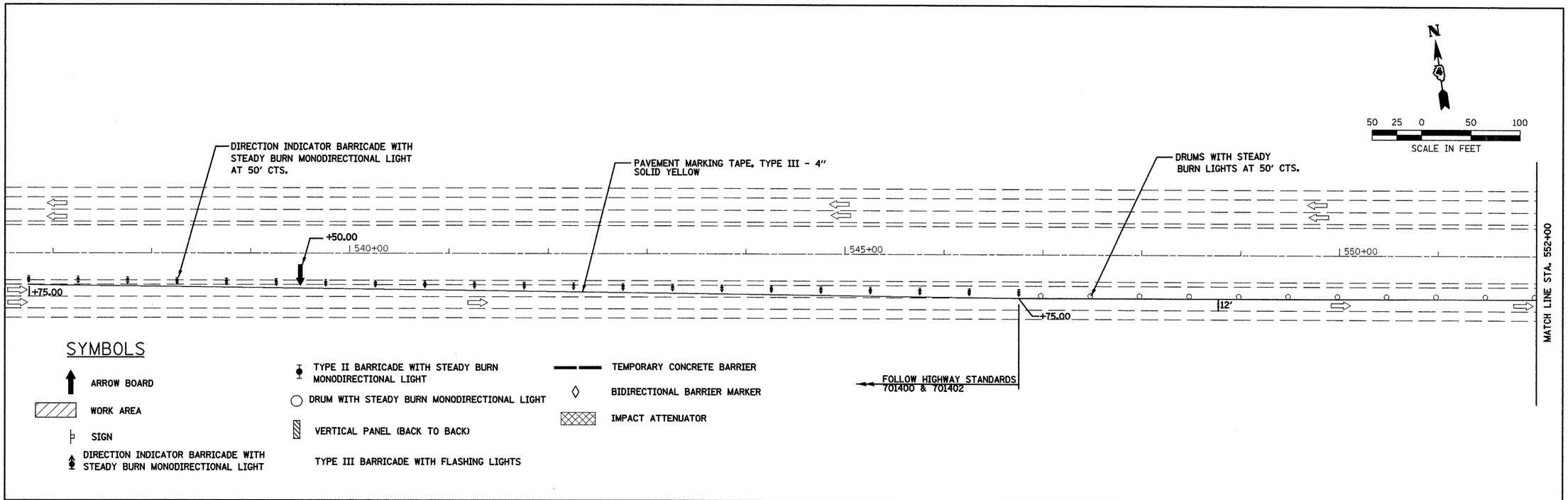

STAGE II:
1. PERFORM SUPERSTRUCTURE REPLACEMENT ON I-74 WB OVER TR 205 (S.N. 048-0011) IN ACCORDANCE WITH HIGHWAY STANDARDS 701400, 701401, 701402, 701416, AND AS SHOWN IN THE PLANS.

STAGE III:
1. UPON COMPLETION OF S.N. 048-0011 SUPERSTRUCTURE REPLACEMENT, REMOVE STAGE I & II CROSSOVER CONFIGURATION AND TEMPORARY DRAINAGE. PERFORM MEDIAN GRADING TO REVERT TO EXISTING CONDITIONS. PROVIDE PROPOSED HEADWALL FOR PIPE DRAINS AT THE BELOW LOCATIONS:

STA. 575+97.63, 14.2' LT.; INVERT ELEV. = 749.26
STA. 576+01.54, 15.0' RT.; INVERT ELEV. = 749.52

THE ABOVE LOCATIONS AND ELEVATIONS ARE APPROXIMATE; FIELD ADJUSTMENTS ARE ALLOWED AS APPROVED BY THE ENGINEER TO CONFORM TO EXISTING PIPE UNDERDRAIN LOCATIONS. ALL STAGE 3 WORK SHALL BE COMPLETED UNDER HIGHWAY STANDARD 701006.

PROP. CURVE STG-2-1
PI STA. = 13+47.36
Δ = 11° 39' 36" (RT)
D = 3° 07' 21"
R = 1,835.00'
T = 187.36'
L = 373.43'
E = 9.54'
e = SEE TRANSITION TABLE
T.R. = _____
S.E. RUN = _____
P.C. STA. = 11+60.00
P.T. STA. = 15+33.43

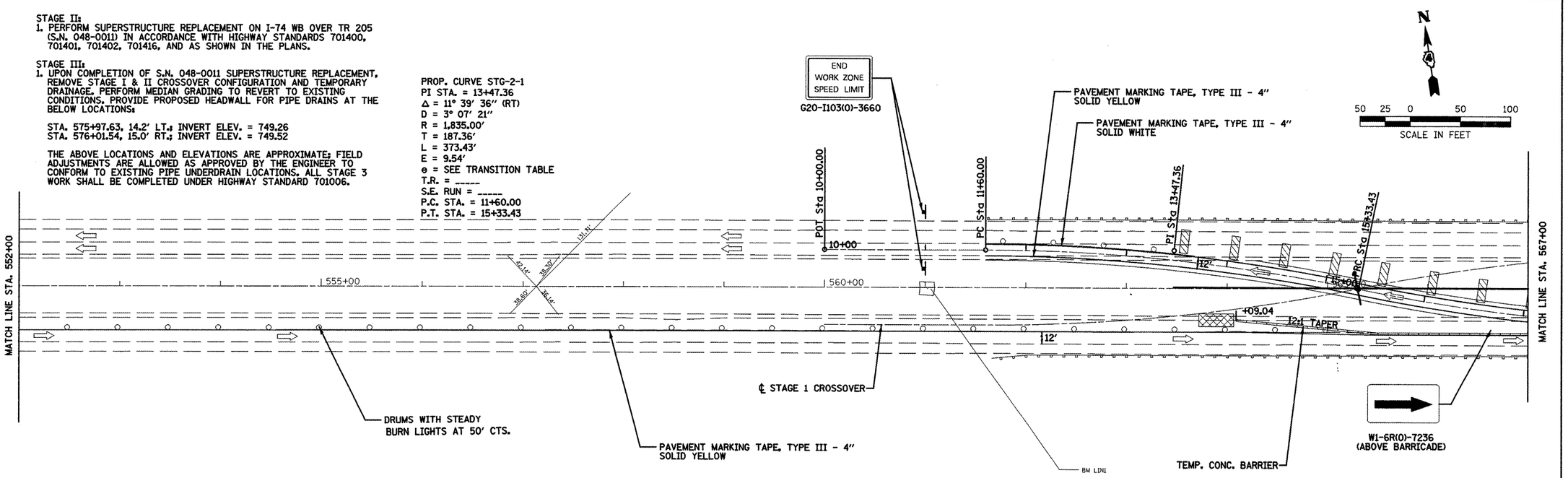

FILE NAME = 0201-MOT.dgn	USER NAME = toroja	DESIGNED - OWR	REVISED - N/A	STATE OF ILLINOIS DEPARTMENT OF TRANSPORTATION	MAINTENANCE OF TRAFFIC STAGE 2 I-74 OVER TOWNSHIP ROAD 205	F.A.I. RTE.	SECTION	COUNTY	TOTAL SHEETS	SHEET NO.
		DRAWN - OWR	REVISED - N/A			74	48(27RS-3); (27HB-5)I, I-1	KNOX	104	31
	PLOT SCALE = 100.00 ' / IN.	CHECKED - FML	REVISED - N/A					CONTRACT NO. 68062		
	PLOT DATE = 12/12/2008	DATE - 11/2008	REVISED - N/A		SCALE: 1" = 50' / SHEET NO. -- OF -- SHEETS / STA. 532+00.00 TO STA. 590+88.88	FED. ROAD DIST. NO.	ILLINOIS	FED. AID PROJECT		

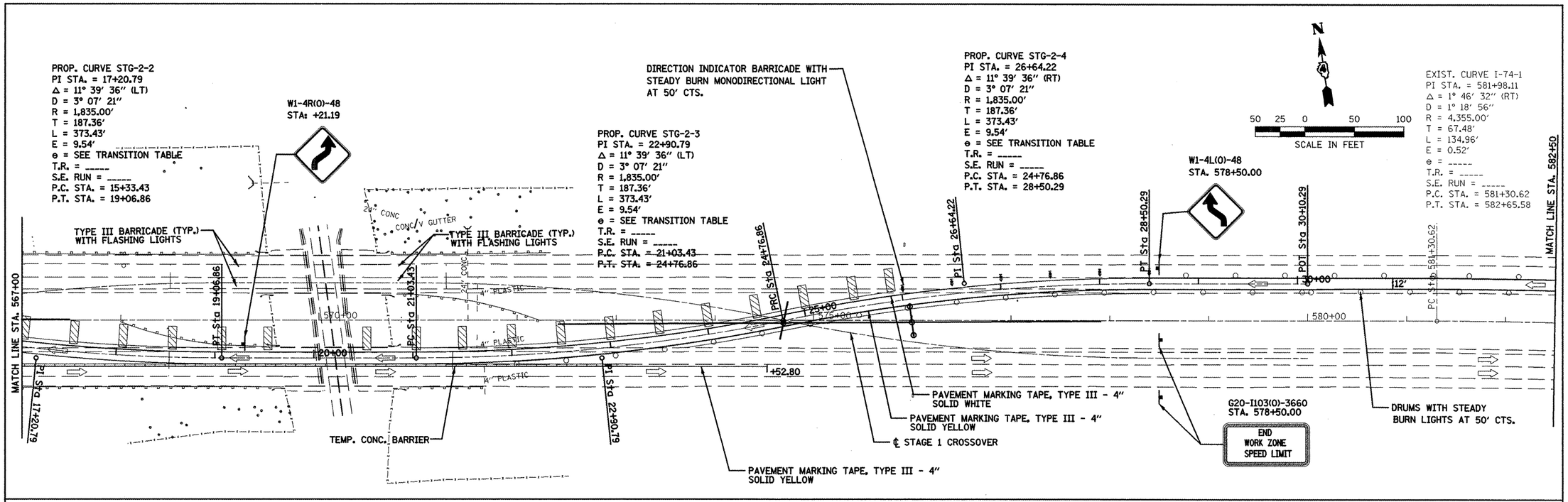

SYMBOLS

- ARROW BOARD
- WORK AREA
- SIGN
- DIRECTION INDICATOR BARRICADE WITH STEADY BURN MONODIRECTIONAL LIGHT
- TYPE II BARRICADE WITH STEADY BURN MONODIRECTIONAL LIGHT
- DRUM WITH STEADY BURN MONODIRECTIONAL LIGHT
- VERTICAL PANEL (BACK TO BACK)
- TYPE III BARRICADE WITH FLASHING LIGHTS
- TEMPORARY CONCRETE BARRIER
- BIDIRECTIONAL BARRIER MARKER
- IMPACT ATTENUATOR

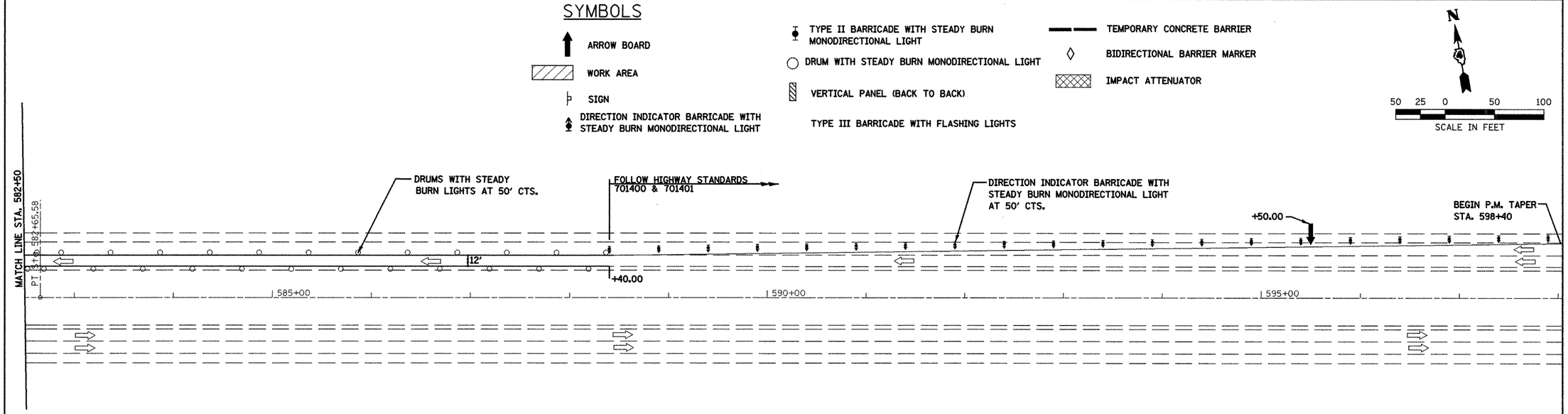

FILE NAME = 0202-MOT.dgn	USER NAME = toroja	DESIGNED - OWR	REVISED - N/A	STATE OF ILLINOIS DEPARTMENT OF TRANSPORTATION	MAINTENANCE OF TRAFFIC STAGE 2 I-74 OVER TOWNSHIP ROAD 205	F.A.I. RTE.	SECTION	COUNTY	TOTAL SHEETS	SHEET NO.
		DRAWN - OWR	REVISED - N/A			74	48(27RS-3); (27HB-5)I, I-1	KNOX	104	32
	PLOT SCALE = 100.00 ′ / IN.	CHECKED - FML	REVISED - N/A					CONTRACT NO. 68062		
	PLOT DATE = 12/12/2008	DATE - 11/2008	REVISED - N/A		SCALE: 1″ = 50′ / SHEET NO. -- OF -- SHEETS / STA. 532+00.00 TO STA. 590+88.88	FED. ROAD DIST. NO.	ILLINOIS	FED. AID PROJECT		

PROP. CURVE STG-2-1
PI STA. = 13+47.36
Δ = 11° 39′ 36″ (RT)
D = 3° 07′ 21″
R = 1,835.00′
T = 187.36′
L = 373.43′
E = 9.54′
e = SEE TRANSITION TABLE
T.R. = _____
S.E. RUN = _____
P.C. STA. = 11+60.00
P.T. STA. = 15+33.43

PROP. CURVE STG-2-2
PI STA. = 17+20.79
Δ = 11° 39′ 36″ (LT)
D = 3° 07′ 21″
R = 1,835.00′
T = 187.36′
L = 373.43′
E = 9.54′
e = SEE TRANSITION TABLE
T.R. = _____
S.E. RUN = _____
P.C. STA. = 15+33.43
P.T. STA. = 19+06.86

50 25 0 50 100
SCALE IN FEET

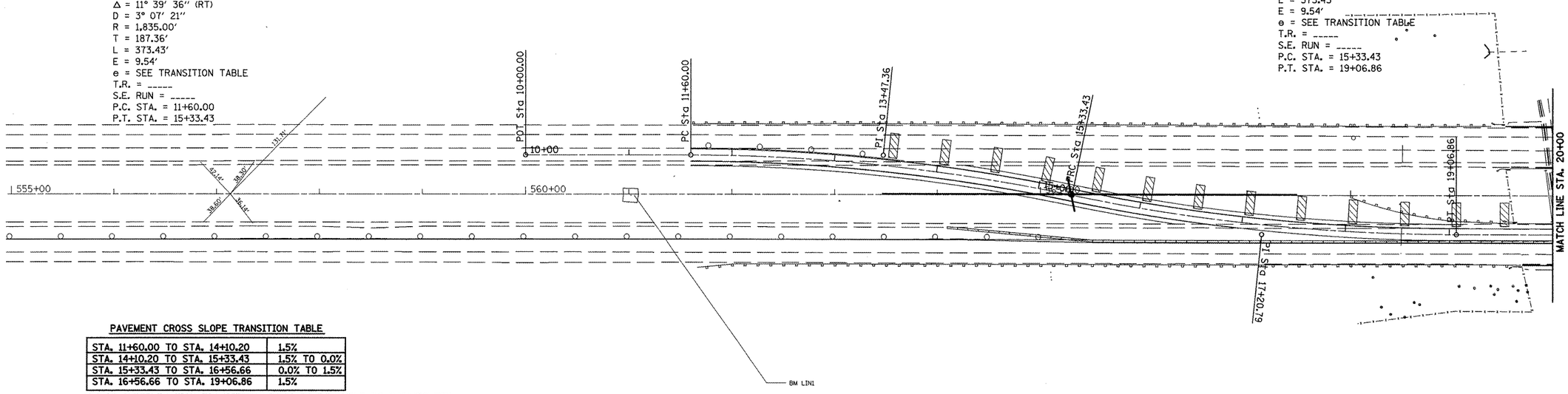

PAVEMENT CROSS SLOPE TRANSITION TABLE

STA. 11+60.00 TO STA. 14+10.20	1.5%
STA. 14+10.20 TO STA. 15+33.43	1.5% TO 0.0%
STA. 15+33.43 TO STA. 16+56.66	0.0% TO 1.5%
STA. 16+56.66 TO STA. 19+06.86	1.5%

ADJUST SUPERELEVATION TRANSITION LIMITS IN THE FIELD TO PROVIDE FOR SMOOTH TRANSITION BETWEEN STAGE 1 AND STAGE 2 TEMPORARY PAVEMENT BEING CONSTRUCTED CONCURRENTLY. THE ENGINEER SHALL REVIEW AND APPROVE ALL FIELD ADJUSTMENTS PRIOR TO PLACEMENT.

PLAN
NOTE BOOK NO. ____
SURVEYED ____
PLOTTED ____
ALIGNMENT CHECKED ____
RT. OF WAY CHECKED ____
FOOT TILE NAME ____
BY ____ DATE ____

PROFILE
NOTE BOOK NO. ____
SURVEYED ____
PLOTTED ____
GRADES CHECKED ____
B.M. NOTED ____
STRUCTURE NOTATNS CHKD ____
BY ____ DATE ____

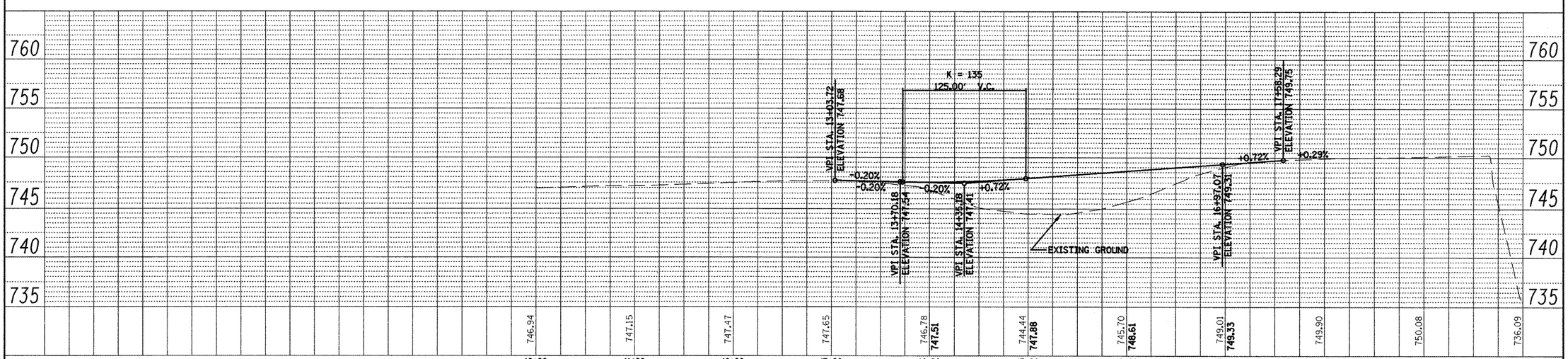

FILE NAME = 0203-MDT.dgn	USER NAME = toroja	DESIGNED - OWR	REVISED - N/A	STATE OF ILLINOIS DEPARTMENT OF TRANSPORTATION	MAINTENANCE OF TRAFFIC PLAN & PROFILE STAGE 2 I-74 OVER TOWNSHIP ROAD 205	F.A.I. RTE.	SECTION	COUNTY	TOTAL SHEETS / SHEET NO.
		DRAWN - OWR	REVISED - N/A			74	48(27RS-3); (27HB-5)I, I-1	KNOX	104 / 33
	PLOT SCALE = 100.00 ′ / IN.	CHECKED - FML	REVISED - N/A		1″= 50′ H & 5′ V / SHEET NO. -- OF -- SHEETS / STA. 00+00.00 TO STA. 00+00.00			CONTRACT NO. 68062	
	PLOT DATE = 12/12/2008	DATE - 11/2008	REVISED - N/A			FED. ROAD DIST. NO.	ILLINOIS	FED. AID PROJECT	

PROP. CURVE STG-2-3
PI STA. = 22+90.79
Δ = 11° 39′ 36″ (LT)
D = 3° 07′ 21″
R = 1,835.00′
T = 187.36′
L = 373.43′
E = 9.54′
θ = SEE TRANSITION TABLE
T.R. = -----
S.E. RUN = -----
~~P.C. STA. = 21+03.43~~
~~P.T. STA. = 24+76.86~~

PROP. CURVE STG-2-4
PI STA. = 26+64.22
Δ = 11° 39′ 36″ (RT)
D = 3° 07′ 21″
R = 1,835.00′
T = 187.36′
L = 373.43′
E = 9.54′
θ = SEE TRANSITION TABLE
T.R. = -----
S.E. RUN = -----
P.C. STA. = 24+76.86
P.T. STA. = 28+50.29

EXIST. CURVE I-74-1
PI STA. = 581+98.11
Δ = 1° 46′ 32″ (RT)
D = 1° 18′ 56″
R = 4,355.00′
T = 67.48′
L = 134.96′
E = 0.52′
θ = -----
T.R. = -----
S.E. RUN = -----
P.C. STA. = 581+30.62
P.T. STA. = 582+65.58

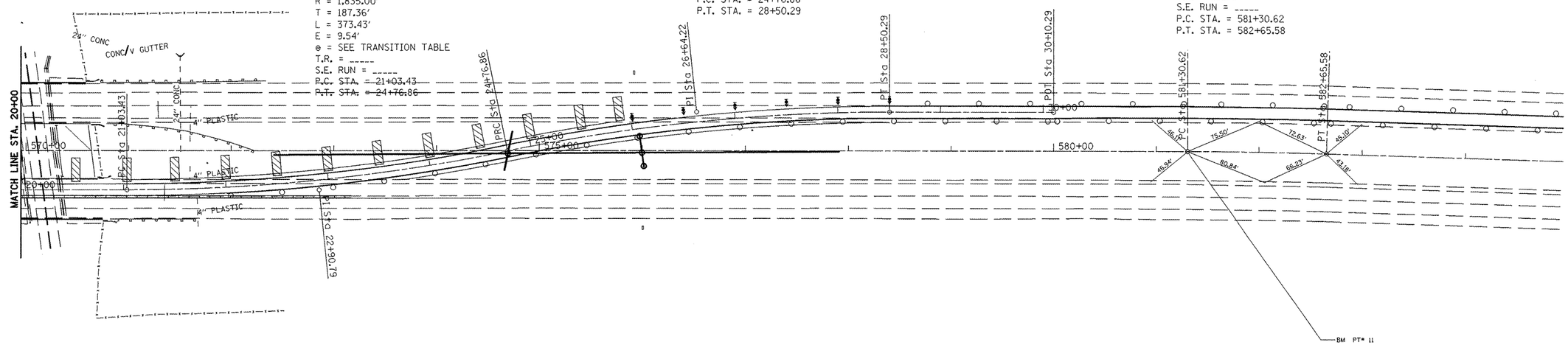

N

50 25 0 50 100
SCALE IN FEET

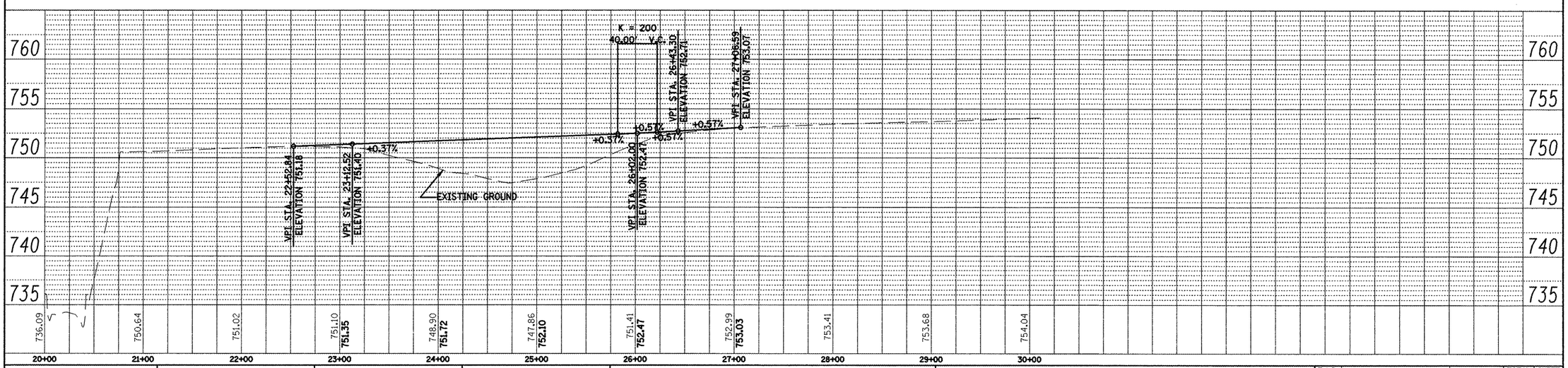

PLAN
SURVEYED
PLATTED
CALCULATED
FIELD BOOK
RT. OF WAY CHECKED
ROAD FILE MADE
NOTE BOOK
NO.
BY
DATE

PROFILE
SURVEYED
PLATTED
CHECKED
GRADES
B.M. NOTED
STRUCTURE NOTATIONS CHKD
NOTE BOOK
NO.
BY
DATE

FILE NAME = 8284-MDT.dgn	USER NAME = toroja	DESIGNED - OWR	REVISED - N/A	STATE OF ILLINOIS DEPARTMENT OF TRANSPORTATION	MAINTENANCE OF TRAFFIC PLAN & PROFILE STAGE 2 I-74 OVER TOWNSHIP ROAD 205
		DRAWN - OWR	REVISED - N/A		
	PLOT SCALE = 100.00 ′ / IN.	CHECKED - FML	REVISED - N/A		1″= 50′ H & 5′ V · SHEET NO. -- OF -- SHEETS · STA. 00+00.00 TO STA. 00+00.00
	PLOT DATE = 12/12/2008	DATE - 11/2008	REVISED - N/A		

F.A.I RTE.	SECTION	COUNTY	TOTAL SHEETS	SHEET NO.
74	48(27RS-3); (27HB-5)I, I-1	KNOX	104	34
		CONTRACT NO. 68062		
FED. ROAD DIST. NO.	ILLINOIS	FED. AID PROJECT		

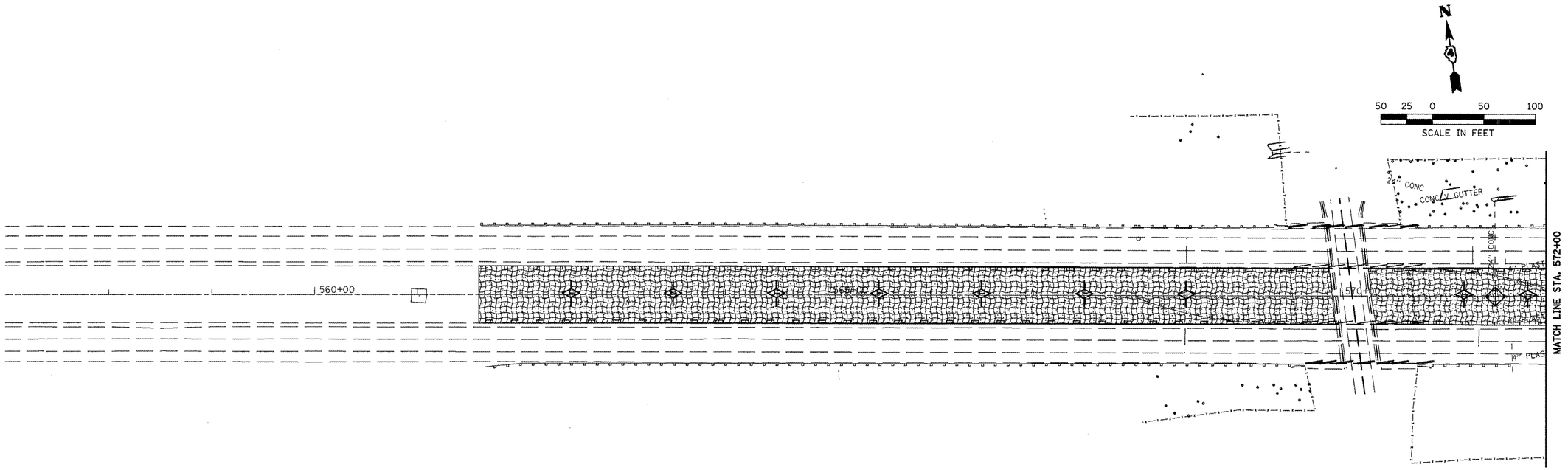

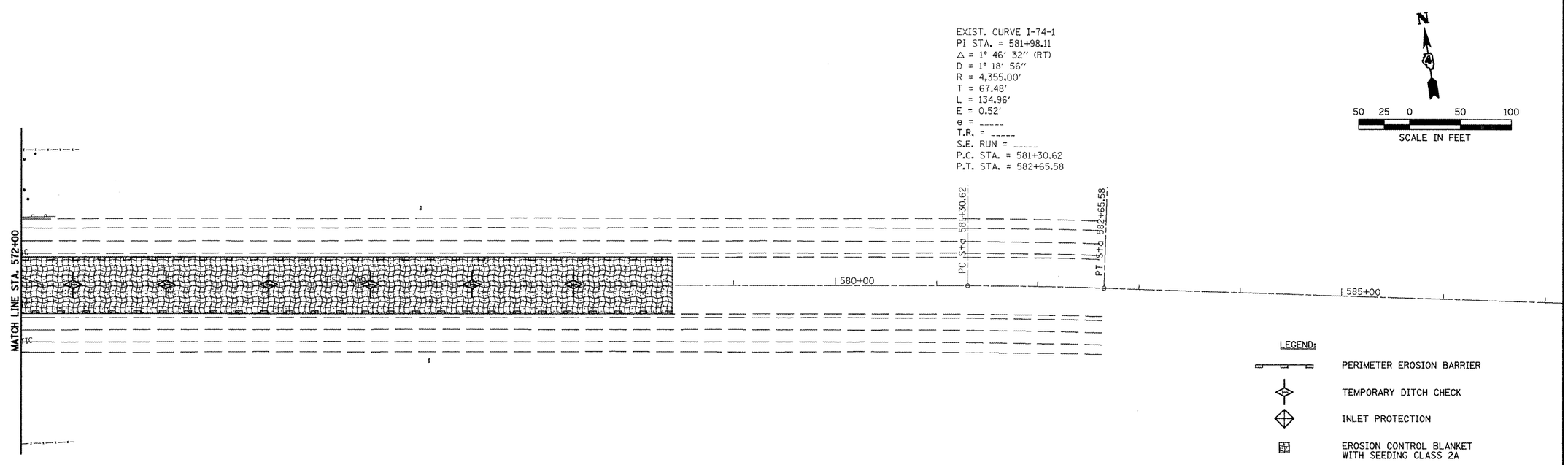

FILE NAME = Erosion Control.dgn	USER NAME = toroja	DESIGNED - OWR	REVISED - N/A	STATE OF ILLINOIS DEPARTMENT OF TRANSPORTATION	EROSION CONTROL PLAN I-74 OVER TOWNSHIP ROAD 205	F.A.I. RTE.	SECTION	COUNTY	TOTAL SHEETS	SHEET NO.
		DRAWN - OWR	REVISED - N/A			74	48(27RS-3); (27HB-5)1, I-1	KNOX	104	35
	PLOT SCALE = 100.00 ′ / IN.	CHECKED - FML	REVISED - N/A					CONTRACT NO. 68062		
	PLOT DATE = 12/12/2008	DATE - 11/2008	REVISED - N/A		SCALE: 1″ = 50′ / SHEET NO. -- OF-- SHEETS / STA. 558+00.00 TO STA. 582+00.00	FED. ROAD DIST. NO.	ILLINOIS	FED. AID PROJECT		

NEW CONSTRUCTION

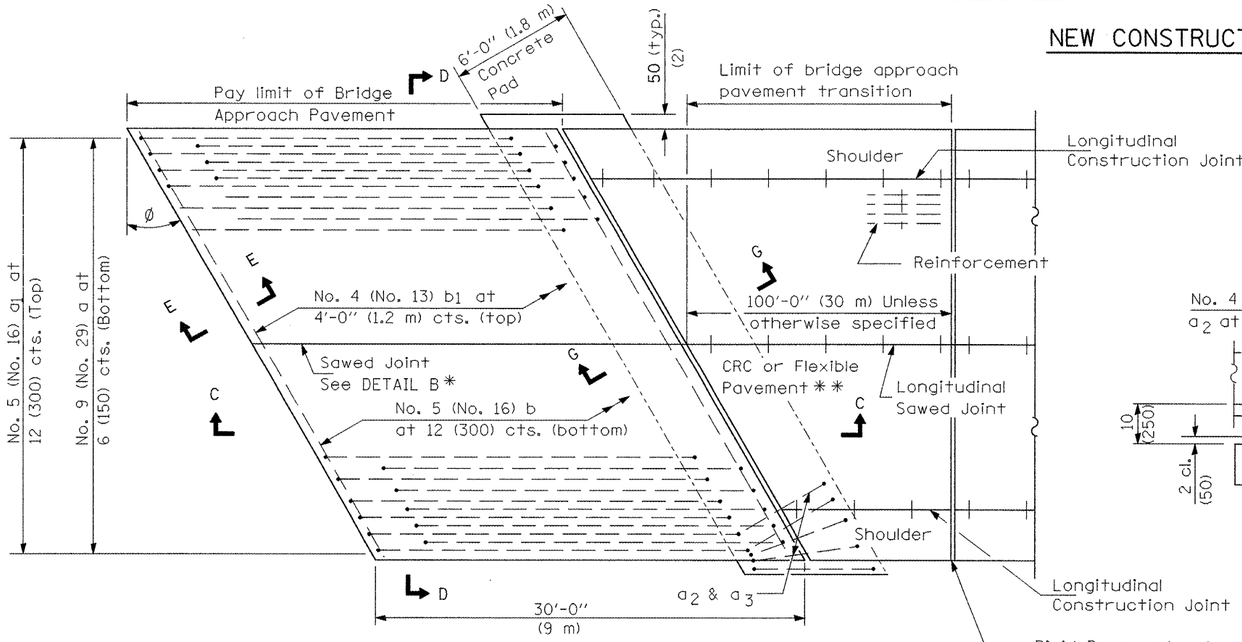

PLAN - WITH SKEW

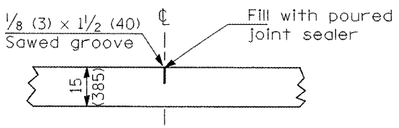

DETAIL B*

(Reinforcement Not Shown)

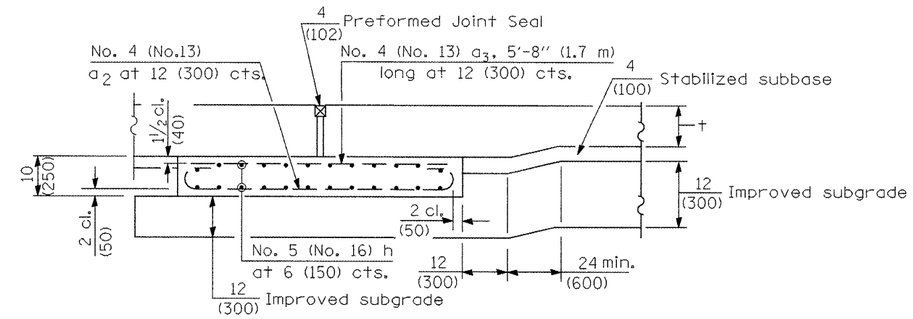

SECTION G-G - RIGID PAVEMENT

(Showing reinforcement)

Rigid Pavement only:

Wide Flange Beam Terminal Joint (See DETAIL AT BEAM - Standard 421101 or 421106) or 2 (50) Trans. Exp. Joint as detailed on Standard 420001.

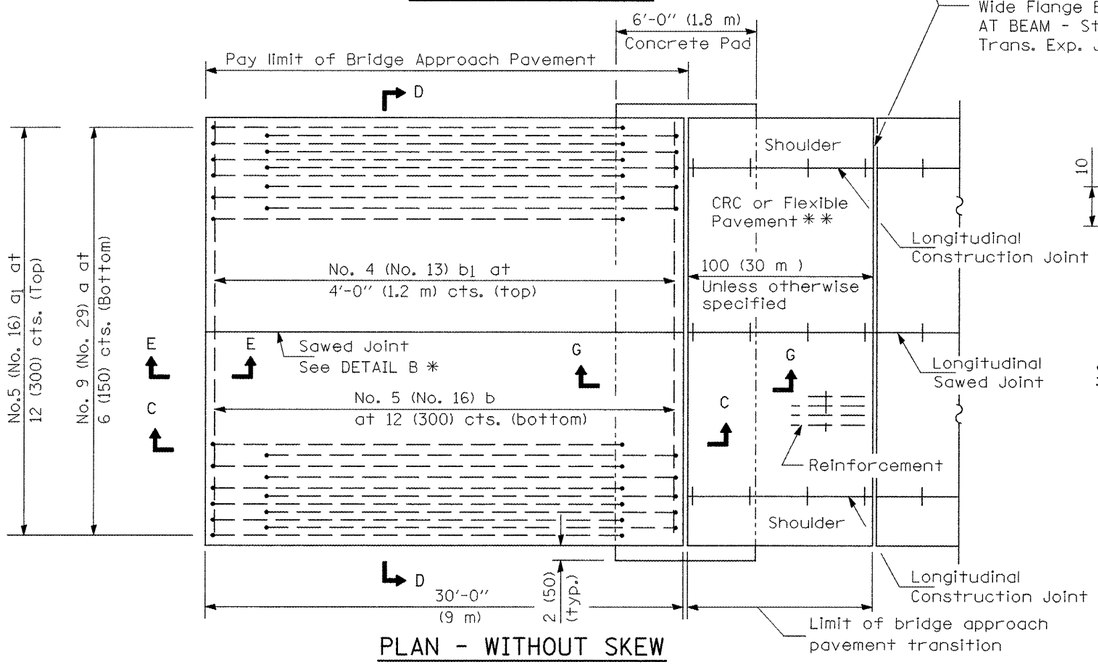

PLAN - WITHOUT SKEW

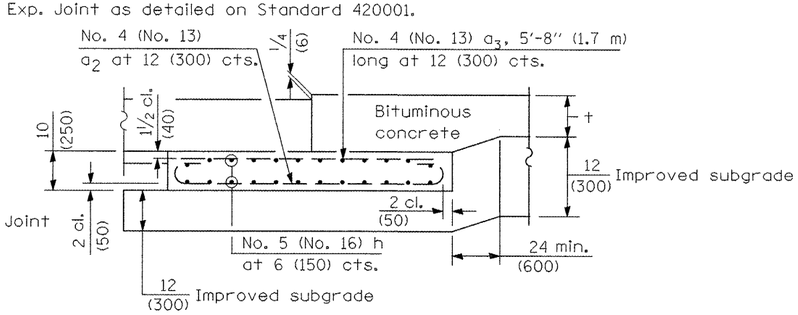

SECTION G-G - FLEXIBLE PAVEMENT

(Showing reinforcement)

GENERAL NOTES

THICKNESS-"t"=Thickness of Pavement.

See Standard 421001 for reinforcement details not shown.

See Standard 420001 for joint details not shown.

* Saw ℄ or lane edge if poured two or more lane widths at a time.

** Omit Reinforcement, tie bars and Long. sawed Jt. for Flexible Pavement.

(Sheet 1 of 4)

FILE NAME = As Submitted _Roadway Plans.dgn	USER NAME = toroja	DESIGNED - OWR	REVISED - N/A
		DRAWN - OWR	REVISED - N/A
	PLOT SCALE = 100.00 ' / IN.	CHECKED - FML	REVISED - N/A
	PLOT DATE = 12/12/2008	DATE - OCTOBER, 2008	REVISED - N/A

STATE OF ILLINOIS
DEPARTMENT OF TRANSPORTATION

BRIDGE APPROACH PAVEMENT
I-74 OVER TOWNSHIP ROAD 205

SCALE: _____ | SHEET NO. -- OF-- SHEETS | STA. 532+00.00 TO STA. 590+88.88

F.A.I. RTE.	SECTION	COUNTY	TOTAL SHEETS	SHEET NO.
74	48(27RS-3); (27HB-5)I, I-1	KNOX	104	36

CONTRACT NO. 68062

FED. ROAD DIST. NO. 4 | ILLINOIS | FED. AID PROJECT 68062

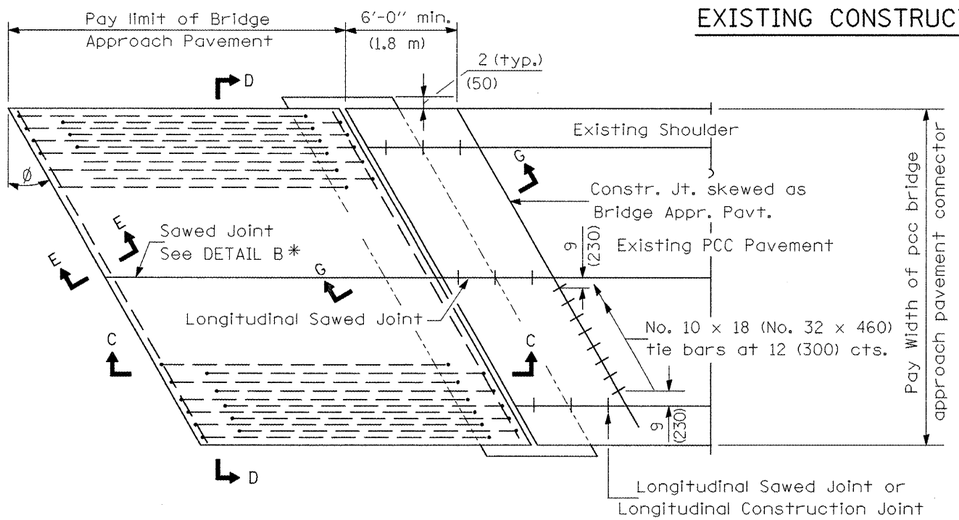

BRIDGE APPROACH PAVEMENT CONNECTOR (PCC)

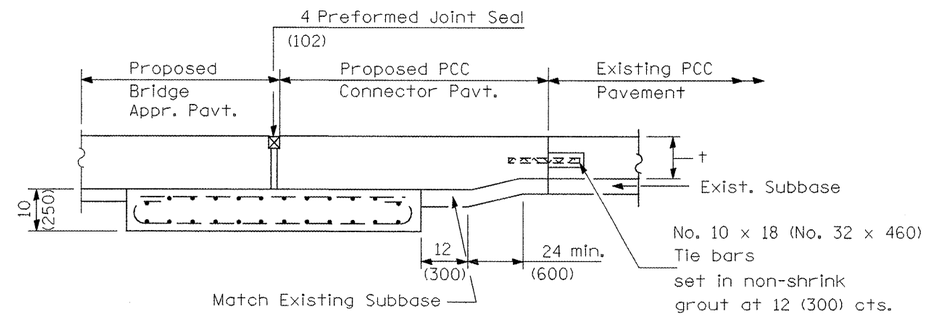

SECTION G-G - RIGID PAVEMENT

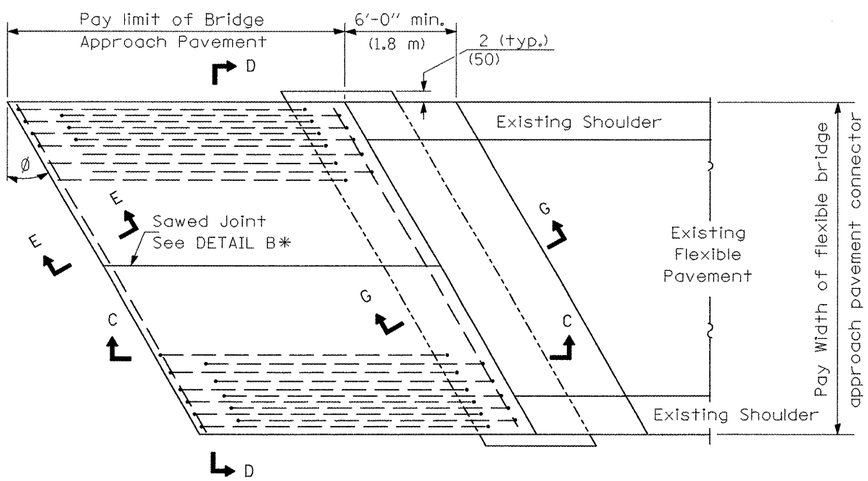

BRIDGE APPROACH PAVEMENT CONNECTOR (FLEXIBLE)

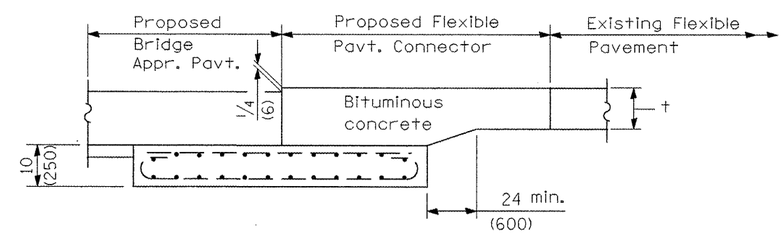

SECTION G-G - FLEXIBLE PAVEMENT

(Sheet 2 of 4)

FILE NAME = As Submitted _Roadway Plans.dgn	USER NAME = toroja	DESIGNED - OWR	REVISED - N/A	STATE OF ILLINOIS DEPARTMENT OF TRANSPORTATION	BRIDGE APPROACH PAVEMENT I-74 OVER TOWNSHIP ROAD 205	F.A.I. RTE.	SECTION	COUNTY	TOTAL SHEETS	SHEET NO.
		DRAWN - OWR	REVISED - N/A			74	48(27RS-3); (27HB-5)I, I-1	KNOX	104	37
	PLOT SCALE = 100.00 ' / IN.	CHECKED - FML	REVISED - N/A					CONTRACT NO. 68062		
	PLOT DATE = 12/12/2008	DATE - OCTOBER, 2008	REVISED - N/A		SCALE: _____ SHEET NO. -- OF-- SHEETS STA. 532+00.00 TO STA. 590+88.88	FED. ROAD DIST. NO. 4	ILLINOIS	FED. AID PROJECT 68062		

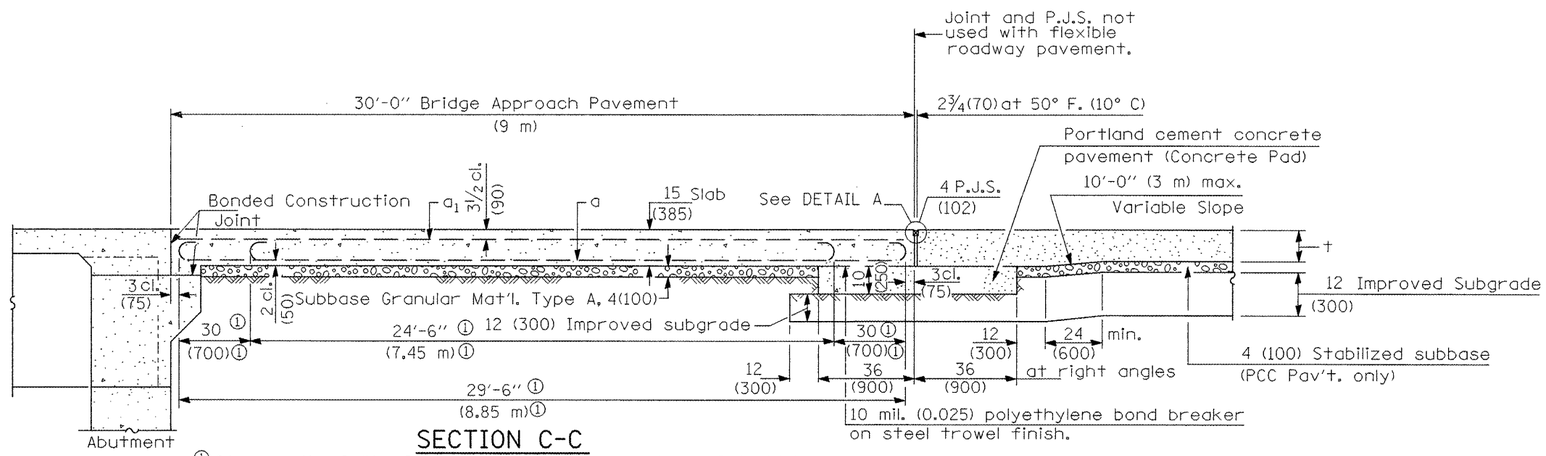

SECTION C-C

① Stagger No. 9 (No. 29) a bars as shown on plan - full width

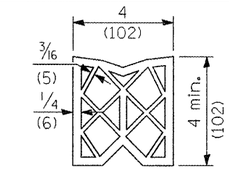

PREFORMED JOINT SEAL

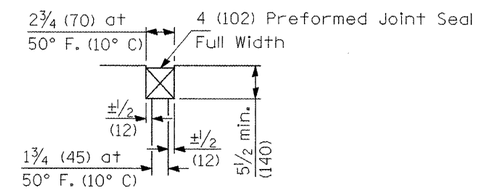

DETAIL A

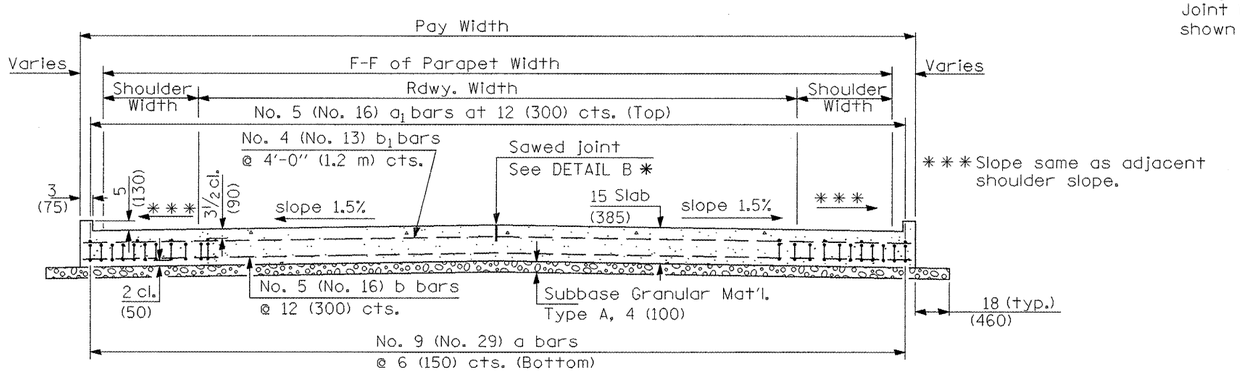

SECTION D-D

(See Plan for Dimensions not shown)

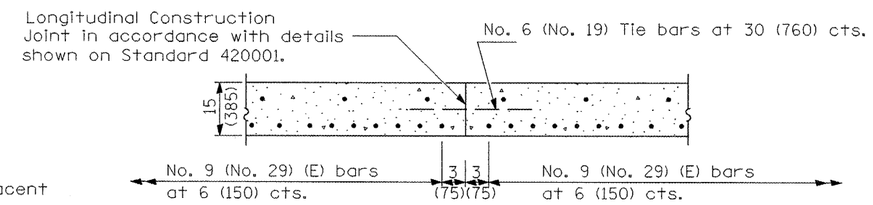

OPTIONAL LONGITUDINAL CONSTRUCTION JOINT

As approved by the Engineer, the Contractor may elect to reduce the widths of pour by use of the Optional Longitudinal Construction Joint shown. Joints shall be located at the edge of a traffic lane.

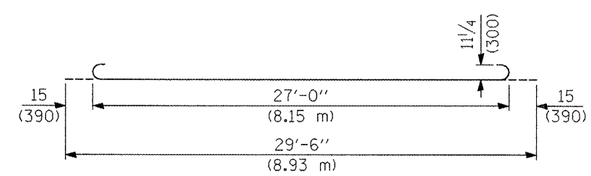

BAR a

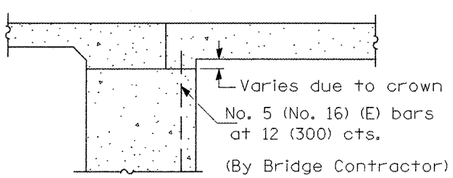

SECTION E-E

(Integral Abutments)

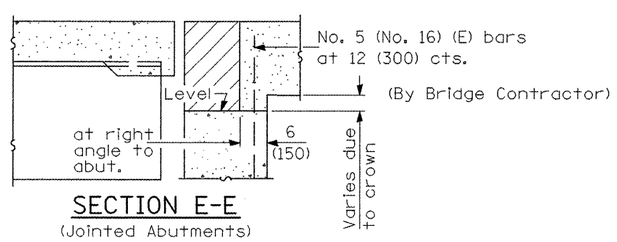

SECTION E-E

(Jointed Abutments)

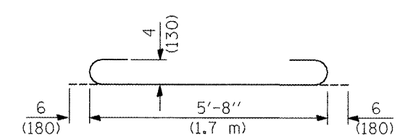

BAR a2

DESIGN STRESSES

fy = 60,000 p.s.i. (400 MPa)
f'c = 3,500 p.s.i. (24 MPa)
n = 8.5

(Sheet 3 of 4)

FILE NAME = As Submitted _Roadway Plans.dgn	USER NAME = toroja	DESIGNED - OWR	REVISED - N/A	STATE OF ILLINOIS DEPARTMENT OF TRANSPORTATION	BRIDGE APPROACH PAVEMENT I-74 OVER TOWNSHIP ROAD 205	F.A.I. RTE.	SECTION	COUNTY	TOTAL SHEETS	SHEET NO.
		DRAWN - OWR	REVISED - N/A			74	48(27RS-3); (27HB-5)I, I-1	KNOX	104	38
	PLOT SCALE = 100.00 ' / IN.	CHECKED - FML	REVISED - N/A					CONTRACT NO. 68062		
	PLOT DATE = 12/12/2008	DATE - OCTOBER, 2008	REVISED - N/A		SCALE: ____ SHEET NO. -- OF-- SHEETS STA. 532+00.00 TO STA. 590+88.88	FED. ROAD DIST. NO. 4	ILLINOIS	FED. AID PROJECT 68062		

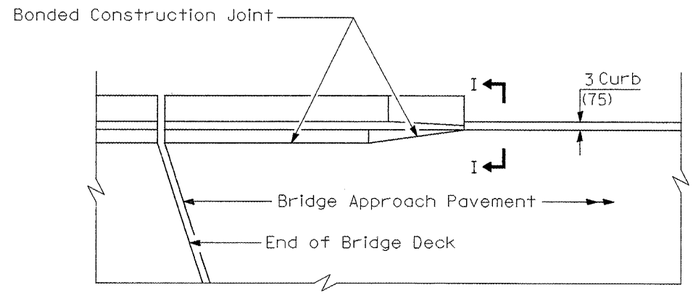

PARAPET TO CURB TRANSITION
PILE BENT ABUTMENT

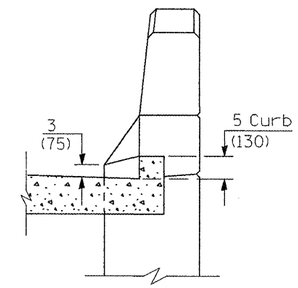

SECTION I - I

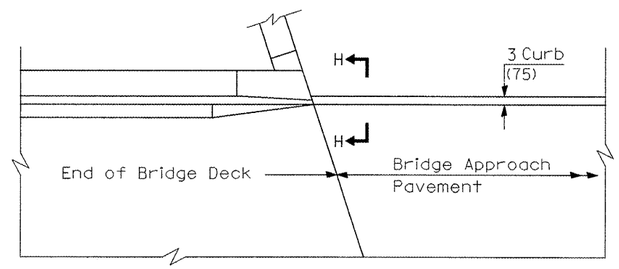

PARAPET TO CURB TRANSITION
INTEGRAL ABUTMENT

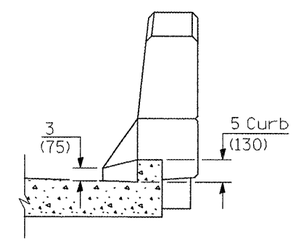

SECTION H - H

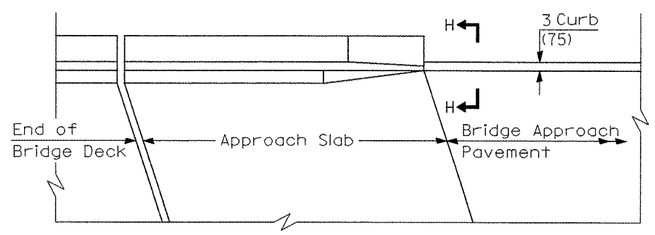

PARAPET TO CURB TRANSITION
VAULTED ABUTMENT

(Sheet 4 of 4)

FILE NAME = As Submitted _Roadway Plans.dgn	USER NAME = toroja	DESIGNED - OWR	REVISED - N/A	STATE OF ILLINOIS DEPARTMENT OF TRANSPORTATION	BRIDGE APPROACH PAVEMENT I-74 OVER TOWNSHIP ROAD 205	F.A.I. RTE.	SECTION	COUNTY	TOTAL SHEETS	SHEET NO.
		DRAWN - OWR	REVISED - N/A			74	48(27RS-3); (27HB-5)I, I-1	KNOX	104	39
	PLOT SCALE = 100.00 ' / IN.	CHECKED - FML	REVISED - N/A					CONTRACT NO. 68062		
	PLOT DATE = 12/12/2008	DATE - OCTOBER, 2008	REVISED - N/A		SCALE: _____ SHEET NO. -- OF-- SHEETS STA. 532+00.00 TO STA. 590+88.88	FED. ROAD DIST. NO. 4	ILLINOIS	FED. AID PROJECT 68062		

Bench Mark: Chiseled square on the North end of West Abutment S.N. 048-0011 Elevation 750.72

STATE OF ILLINOIS
DEPARTMENT OF TRANSPORTATION

Existing Structure: The existing dual structures (Structure No. 048-0011 & 048-0012), constructed in 1963 under I-74-2(12)51, Section 48-27HB-5, are three continuous span reinforced concrete slab bridges on stub abutments with wingwalls. Back to back abutment length is 111'-6½" and out to out deck width is 43'-8". The span length is 33'-0" brg. to ℄ pier for the end spans and 41'-3" ℄ pier to ℄ pier for the middle span. The existing structure was rehabilitated in 1997. The rehabilitaion work consisted of closing the longitudinal slab joints under contract C-94-315-96 and replacing the expansion joints. The Contractor shall remove and replace the existing superstructure and repair the substructure.
Two-way traffic to be maintained utilizing crossovers between E.B. and W.B. lanes. Traffic on TR 205 shall be detoured during construction.
No Salvage.

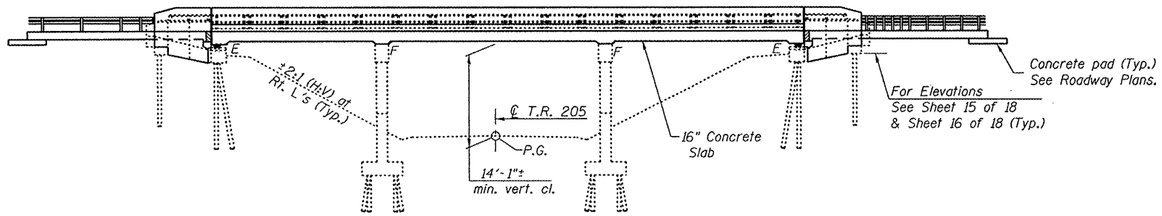

ELEVATION

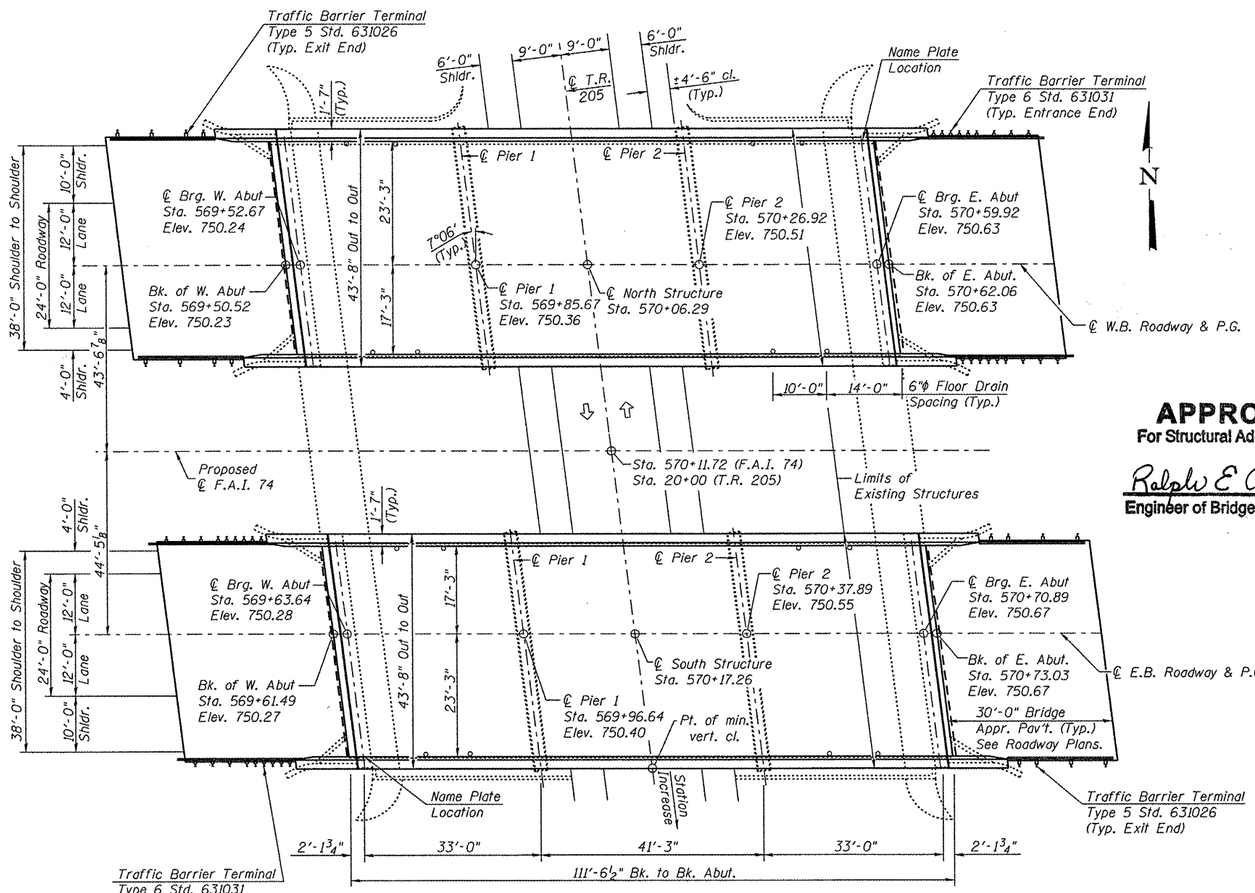

PLAN

INDEX OF SHEETS

1. General Plan
2. General Notes & Details
3. Temporary Concrete Barrier
4. Deck Elevations - 1
5. Deck Elevations - 2
6. Approach Pavement Elevations - 1
7. Approach Pavement Elevations - 2
8. Superstructure
9. Superstructure Details
10. Preformed Joint Strip Seal
11. Bearing Details
12. Concrete Removal
13. Abutment Modifications - 1
14. Abutment Modifications - 2
15. Abutment Details - 1
16. Abutment Details - 2
17. Piers 1 & 2
18. Bar Splicer Assembly Details

SCOPE OF WORK

1. Remove existing concrete slab and roller bearings at abutments.
2. Remove approach pavements and hatch block.
3. Repair substructure.
4. Provide drainage system behind abutments.
5. Replace with concrete slab, elastomeric bearings, and F-shape parapets.
6. Reconstruct wingwalls.
7. Replace approach pavements and hatch block.

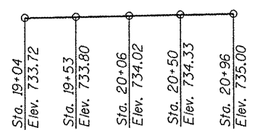

PROFILE GRADE T.R. 205
(along ℄ T.R. 205)

LOADING HL-93 (New Const.)
Allow 50#/sq. ft. for future wearing surface.

DESIGN SPECIFICATIONS
2007 AASHTO LRFD Bridge Design Specifications
with 2008 Interims (New Construction)
1995 FHWA Seismic Retrofitting Manual for Highway Bridges. (Existing)

DESIGN STRESSES

FIELD UNITS (New Const.)	FIELD UNITS (Existing)
f'c = 3,500 psi	f'c = 1,400 psi
fy = 60,000 psi (Reinforcement)	fy = 20,000 psi (Reinforcement)

SEISMIC DATA
Seismic Performance Category (SPC) = A
Horizontal Bedrock Acceleration Coefficient (A) = 0.038g
Site Coefficient (S) = 1.5

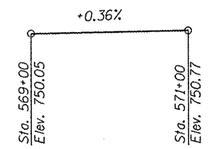

PROFILE GRADE F.A.I. RTE. 74

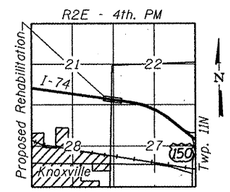

LOCATION SKETCH

APPROVED
For Structural Adequacy Only
Ralph E. Anderson
Engineer of Bridges & Structures

LICENSED STRUCTURAL ENGINEER MICHAEL T. HALEY 81-5991 CHATHAM STATE OF ILLINOIS

Michael T. Haley 12/7/08
Michael T. Haley — Date
Licensed Structural Engineer
State of Illinois No. 81-5991
Expires 11/30/2010

GENERAL PLAN
I-74 OVER TOWNSHIP ROAD 205
F.A.I. RTE. 74 - SEC. 48-(27HB-5)I,I-1
KNOX COUNTY
STATION 570+11.72
STRUCTURE NO. 048-0011 (WB), 0012 (EB)

LIN ENGINEERING, LTD.
Consulting Engineers
Chatham, Illinois

Designed By: ESH | Checked By: MTH | Drawn By: ESH
Date: 10/2008 | File: 048-0011,0012.dgn

SHEET NO. 1
18 SHEETS

F.A.I. RTE.	SECTION	COUNTY	TOTAL SHEETS	SHEET NO.
74	48-(27HB-5)I,I-1	KNOX	104	40
		CONTRACT NO. 68062		
FED. ROAD DIST. NO.	ILLINOIS	FED. AID PROJECT		

D-94-048-00

STATE OF ILLINOIS
DEPARTMENT OF TRANSPORTATION

TOTAL BILL OF MATERIAL

	ITEM	UNIT	SUPER	SUB	TOTAL
	Structure Excavation	Cu. Yd.	-	124	124
	Concrete Removal	Cu. Yd.	-	33.6	33.6
	Concrete Structures	Cu. Yd.	-	20.6	20.6
	Concrete Superstructure	Cu. Yd.	566.3	-	566.3
	Preformed Joint Strip Seal	Foot	172.0	-	172.0
**	Bridge Deck Grooving	Sq. Yd.	1448	-	1448
	Reinforcement Bars, Epoxy Coated	Pound	148150	5910	154060
**	Protective Coat	Sq. Yd.	1743	-	1743
	Name Plates	Each	2	-	2
	Removal of Existing Superstructures	Each	2	-	2
	Elastomeric Bearing Assembly, Type I	Each	-	24	24
	Anchor Bolts, 1"	Each	-	48	48
	Bar Splicers	Each	-	164	164
	Pipe Underdrains for Structures, 4 in.	Foot	-	224	224
	Porous Granular Embankment (Special)	Cu. Yd.	-	124	124
	Floor Drains	Each	16	-	16
	Geocomposite Wall Drain	Sq. Yd.	-	82	82
	Structural Repair of Concrete (Depth Equal To or Less Than 5 in)	Sq. Ft.	-	11.8	11.8
	Concrete Sealer	Sq. Ft.	-	964	964

** Quantity includes approach pavement.

GENERAL NOTES

Reinforcement bars shall conform to the requirements of ASTM A 706 Gr 60. See Special Provisions.

Reinforcement bars designated (E) shall be epoxy coated.

Plan dimensions and details relative to existing plans are subject to nominal construction variations. The Contractor shall field verify existing dimensions and details affecting new construction and make necessary approved adjustments prior to construction or ordering of materials. Such variations shall not be cause for additional compensation for a change in scope of the work, however, the Contractor will be paid for the quantity actually furnished at the unit price bid for the work.

Stationing, offsets and elevations are developed from field survey data. It is the Contractor's responsibility to verify this data matches the existing structures.

Concrete Sealer shall be applied to areas of the Abutments as designated on Sheets 15 and 16 of 18.

The Contractor shall make allowance for the deflection of forms, shrinkage and settlement of falsework, in addition to allowance for dead load deflection. Forms for deck slab shall be removed prior to placement of bridge approach pavement.

Slipforming of the parapets is not allowed.

The existing steel bearing coating contains lead. The Contractor shall take appropriate precautions to deal with the presence of lead on this project.

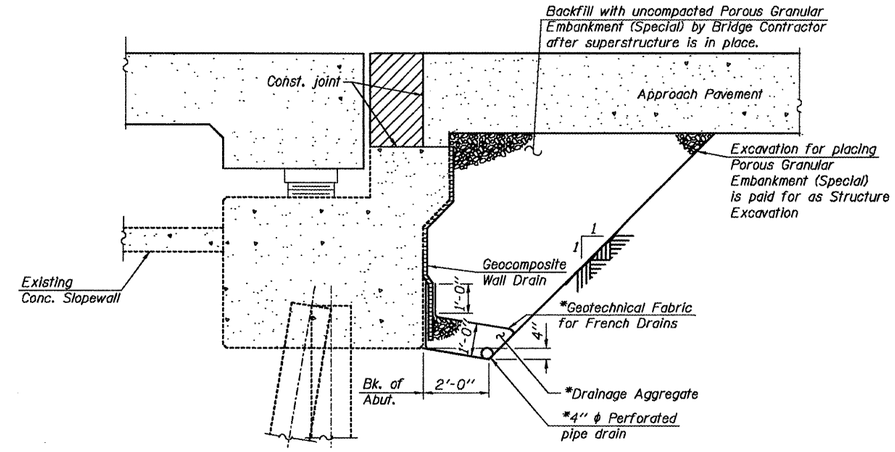

SECTION THRU ABUTMENT

(Horizontal dimensions @ Rt. L's)

*Included in the cost of Pipe Underdrains for Structures.

All drainage system components shall extend to the wingwall except an outlet pipe shall extend until intersecting with the side slopes. The pipes shall drain into concrete headwalls. (See Article 601.05 of the Standard Specifications and Highway Standard 601101).

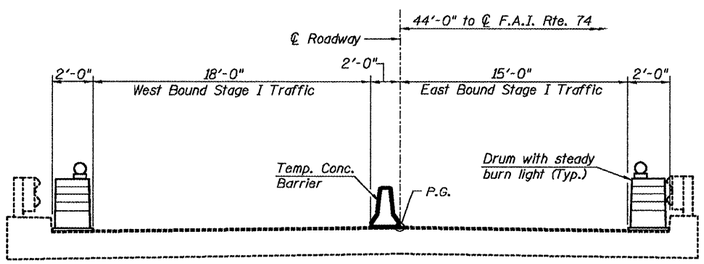

STAGE I TRAFFIC

(Utilizing Crossovers)
(Existing North Structure)

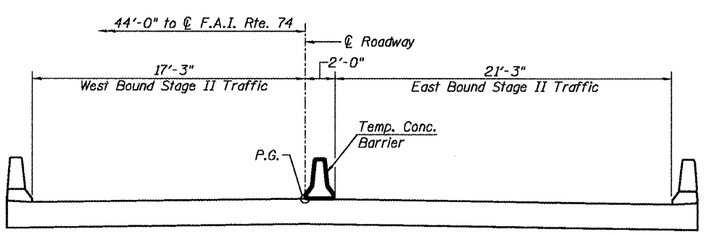

STAGE II TRAFFIC

(Utilizing Crossovers)
(Proposed South Structure)

Notes:
1. See roadway plans for quantity of Temporary Concrete Barrier.
2. See sheet 3 of 18 for details of Temporary Concrete Barrier.
3. All cross sections are Looking East.

STATION 570+11.72 RE-BUILT 20 BY STATE OF ILLINOIS F.A.I. RT. 74 SEC. 48-(27HB-5)I,I-1 LOADING HL-93 STR NO. 048-0011	STATION 570+11.72 RE-BUILT 20 BY STATE OF ILLINOIS F.A.I. RT. 74 SEC. 48-(27HB-5)I,I-1 LOADING HL-93 STR NO. 048-0012

NAME PLATES

See Std. 515001

Note:
Existing Name Plates shall be cleaned and relocated next to new Name Plates. Cost included with Name Plates.

GENERAL NOTES & DETAILS
I-74 OVER TOWNSHIP ROAD 205
F.A.I. RTE. 74 - SEC. 48-(27HB-5)I,I-1
KNOX COUNTY
STATION 570+11.72
STRUCTURE NO. 048-0011 (WB), 0012 (EB)

LIN ENGINEERING, LTD.
Consulting Engineers
Chatham, Illinois

Designed By: ESH | Checked By: MTH | Drawn By: ESH
Date: 10/2008 | File: 048-0011,0012.dgn

SHEET NO. 2
18 SHEETS

F.A.I. RTE.	SECTION	COUNTY	TOTAL SHEETS	SHEET NO.
74	48-(27HB-5)I,I-1	KNOX	104	41
		CONTRACT NO. 68062		
FED. ROAD DIST. NO.	ILLINOIS	FED. AID PROJECT		

D-94-048-00

STATE OF ILLINOIS
DEPARTMENT OF TRANSPORTATION

When "A" is 3'-6" or less, the temporary concrete barrier shall be anchored to the new slab according to Detail I or Detail II. No anchorage is required when "A" is greater than 3'-6".

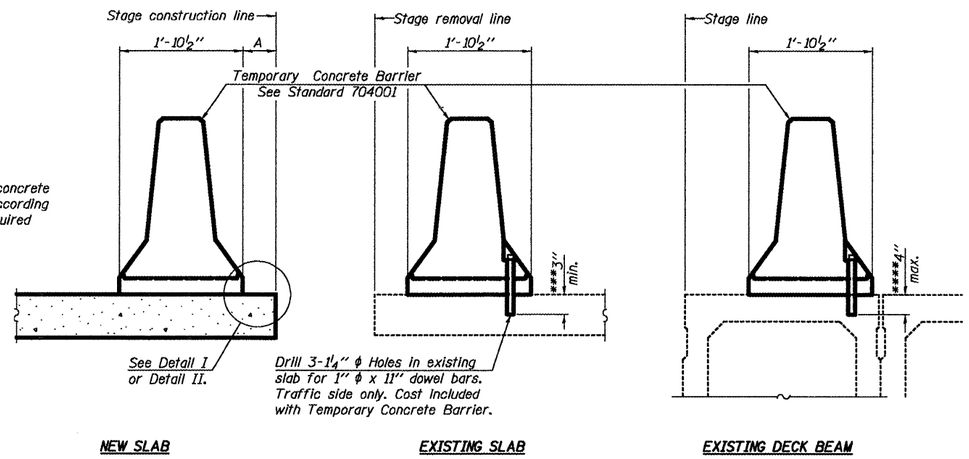

SECTIONS THRU SLAB OR DECK BEAM

NOTES

Detail I - With Bar Splicer or Couplers:
Connect one (1) 1"x7"x10" steel ℙ to the top layer of couplers with 2-⅝" ϕ bolts screwed to coupler at approximate ℄ of each barrier panel.

Detail II - With Extended Reinforcement Bars:
Connect one (1) 1"x7"x10" steel ℙ to the concrete slab or concrete wearing surface with 2-⅝"ϕ Expansion Anchors or cast in place inserts spaced between the top layer of reinforcement at approximate ℄ of each barrier panel.

Cost of anchorage is included with Temporary Concrete Barrier.

The 1" x 7" x 10" plate shall not be removed until stage II construction forms and all reinforcement bars are in place and the concrete is ready to be placed.

***Dimension shown is minimum required embedment into concrete. If hot-mix asphalt wearing surface is present, minimum embedment shall be in addition to wearing surface depth.

****If existing deck beam is to remain in place after stage construction, embedment shall only be into wearing surface and not into existing deck beam concrete.

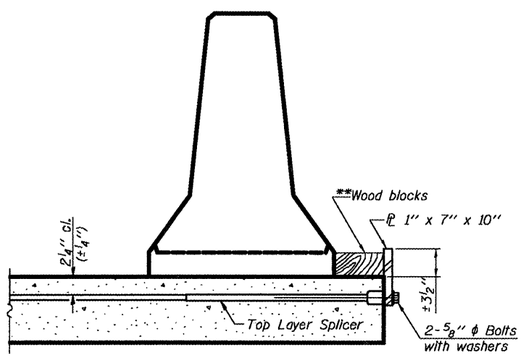

DETAIL I

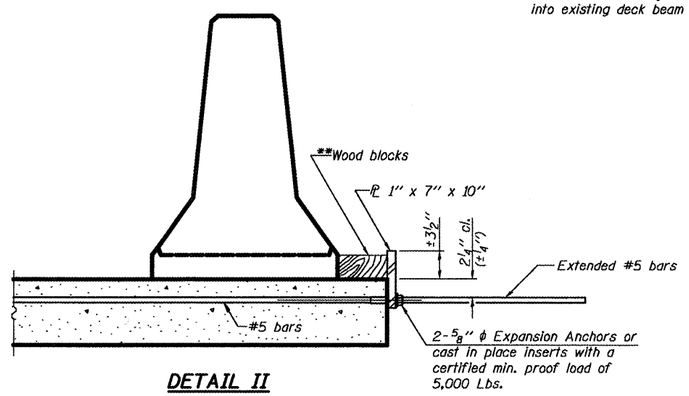

DETAIL II

**Wood blocks may be omitted when required to provide minimum stage traffic lane width. When the wood blocks are omitted, the concrete barrier shall be in direct contact with the steel retainer plate.

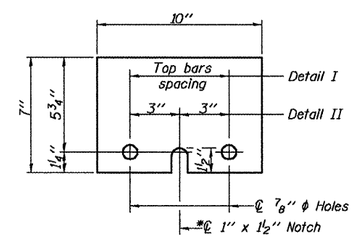

STEEL RETAINER ℙ 1" x 7" x 10"

*Required only with Detail II

TEMPORARY CONCRETE BARRIER
I-74 OVER TOWNSHIP ROAD 205
F.A.I. RTE. 74 - SEC. 48-(27HB-5)I,I-1
KNOX COUNTY
STATION 570+11.72
STRUCTURE NO. 048-0011 (WB), 0012 (EB)

LIN ENGINEERING, LTD. Consulting Engineers, Chathem, Illinois	SHEET NO. 3	F.A.I. RTE.	SECTION	COUNTY	TOTAL SHEETS	SHEET NO.
Designed By: ESH · Checked By: MTH · Drawn By: ESH · Date: 10/2008 · File: 048-0011,0012.dgn	18 SHEETS	74	48-(27HB-5)I,I-1	KNOX	104	42
				CONTRACT NO. 68062		
		FED. ROAD DIST. NO.	ILLINOIS	FED. AID PROJECT		

R-27 5-16-08

D-94-048-00

STATE OF ILLINOIS
DEPARTMENT OF TRANSPORTATION

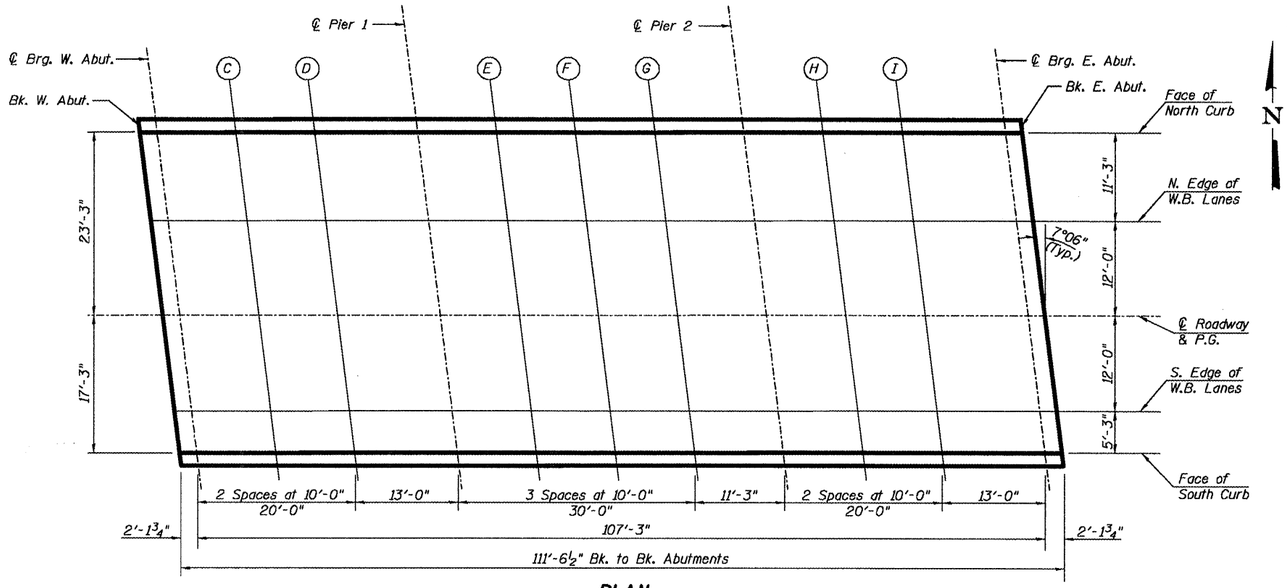

PLAN

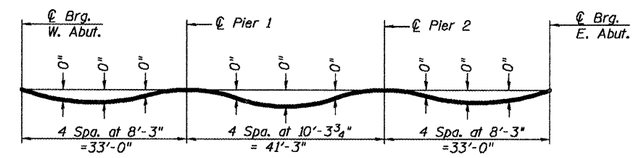

DEAD LOAD DEFLECTION DIAGRAM

(Includes weight of concrete only.)

Note: The above deflections are not to be used in the field if the engineer is working from the grade elevations adjusted for dead load deflections as shown on this sheet.

FACE OF NORTH CURB

Location	Station	Offset (ft)	Theoretical Grade Elevations	Theoretical Grade Elevations Adjusted For Dead Load Deflection
Bk. of W. Abut.	569+47.62	-23.25	749.80	749.80
℄ Brg. W. Abut.	569+49.77	-23.25	749.81	749.81
C	569+59.77	-23.25	749.84	749.84
D	569+69.77	-23.25	749.88	749.88
℄ Pier 1	569+82.77	-23.25	749.93	749.93
E	569+92.77	-23.25	749.96	749.96
F	570+02.77	-23.25	750.00	750.00
G	570+12.77	-23.25	750.03	750.03
℄ Pier 2	570+24.02	-23.25	750.07	750.07
H	570+34.02	-23.25	750.11	750.11
I	570+44.02	-23.25	750.15	750.15
℄ Brg. E. Abut.	570+57.02	-23.25	750.19	750.19
Bk. of E. Abut.	570+59.16	-23.25	750.20	750.20

SOUTH EDGE OF W.B. LANES

Location	Station	Offset (ft)	Theoretical Grade Elevations	Theoretical Grade Elevations Adjusted For Dead Load Deflection
Bk. of W. Abut.	569+52.01	12.00	750.05	750.05
℄ Brg. W. Abut.	569+54.16	12.00	750.06	750.06
C	569+64.16	12.00	750.09	750.09
D	569+74.16	12.00	750.13	750.13
℄ Pier 1	569+87.16	12.00	750.18	750.18
E	569+97.16	12.00	750.21	750.21
F	570+07.16	12.00	750.25	750.25
G	570+17.16	12.00	750.28	750.28
℄ Pier 2	570+28.41	12.00	750.32	750.32
H	570+38.41	12.00	750.36	750.36
I	570+48.41	12.00	750.40	750.40
℄ Brg. E. Abut.	570+61.41	12.00	750.44	750.44
Bk. of E. Abut.	570+63.56	12.00	750.45	750.45

P.G. & ℄ ROADWAY

Location	Station	Offset (ft)	Theoretical Grade Elevations	Theoretical Grade Elevations Adjusted For Dead Load Deflection
Bk. of W. Abut.	569+50.52	0.00	750.23	750.23
℄ Brg. W. Abut.	569+52.67	0.00	750.24	750.24
C	569+62.67	0.00	750.28	750.28
D	569+72.67	0.00	750.31	750.31
℄ Pier 1	569+85.67	0.00	750.36	750.36
E	569+95.67	0.00	750.39	750.39
F	570+05.67	0.00	750.43	750.43
G	570+15.67	0.00	750.47	750.47
℄ Pier 2	570+26.92	0.00	750.51	750.51
H	570+36.92	0.00	750.54	750.54
I	570+46.92	0.00	750.58	750.58
℄ Brg. E. Abut.	570+59.92	0.00	750.63	750.63
Bk. of E. Abut.	570+62.06	0.00	750.63	750.63

NORTH EDGE OF W.B. LANES

Location	Station	Offset (ft)	Theoretical Grade Elevations	Theoretical Grade Elevations Adjusted For Dead Load Deflection
Bk. of W. Abut.	569+49.02	-12.00	750.04	750.04
℄ Brg. W. Abut.	569+51.17	-12.00	750.05	750.05
C	569+61.17	-12.00	750.08	750.08
D	569+71.17	-12.00	750.12	750.12
℄ Pier 1	569+84.17	-12.00	750.17	750.17
E	569+94.17	-12.00	750.20	750.20
F	570+04.17	-12.00	750.24	750.24
G	570+14.17	-12.00	750.27	750.27
℄ Pier 2	570+25.42	-12.00	750.31	750.31
H	570+35.42	-12.00	750.35	750.35
I	570+45.42	-12.00	750.39	750.39
℄ Brg. E. Abut.	570+58.42	-12.00	750.43	750.43
Bk. of E. Abut.	570+60.57	-12.00	750.44	750.44

FACE OF SOUTH CURB

Location	Station	Offset (ft)	Theoretical Grade Elevations	Theoretical Grade Elevations Adjusted For Dead Load Deflection
Bk. of W. Abut.	569+52.67	17.25	749.94	749.94
℄ Brg. W. Abut.	569+54.81	17.25	749.95	749.95
C	569+64.81	17.25	749.99	749.99
D	569+74.81	17.25	750.02	750.02
℄ Pier 1	569+87.81	17.25	750.07	750.07
E	569+97.81	17.25	750.11	750.11
F	570+07.81	17.25	750.14	750.14
G	570+17.81	17.25	750.18	750.18
℄ Pier 2	570+29.06	17.25	750.22	750.22
H	570+39.06	17.25	750.25	750.25
I	570+49.06	17.25	750.29	750.29
℄ Brg. E. Abut.	570+62.06	17.25	750.34	750.34
Bk. of E. Abut.	570+64.21	17.25	750.34	750.34

All offsets measured from ℄ Roadway of North Structure.

DECK ELEVATIONS -1
(NORTH STRUCTURE)
I-74 OVER TOWNSHIP ROAD 205
F.A.I. RTE. 74 - SEC. 48-(27HB-5)I,I-1
KNOX COUNTY
STATION 570+11.72
STRUCTURE NO. 048-0011 (WB), 0012 (EB)

LIN ENGINEERING, LTD.
Consulting Engineers
Chatham, Illinois

Designed By: ESH | Checked By: WTN | Drawn By: ESH
Date: 10/2008 | File: 048-0011,0012.dgn

SHEET NO. 4
18 SHEETS

F.A.I. RTE.	SECTION	COUNTY	TOTAL SHEETS	SHEET NO.
74	48-(27HB-5)I,I-1	KNOX	104	43
		CONTRACT NO. 68062		
FED. ROAD DIST. NO.	ILLINOIS	FED. AID PROJECT		

D-94-048-00

STATE OF ILLINOIS
DEPARTMENT OF TRANSPORTATION

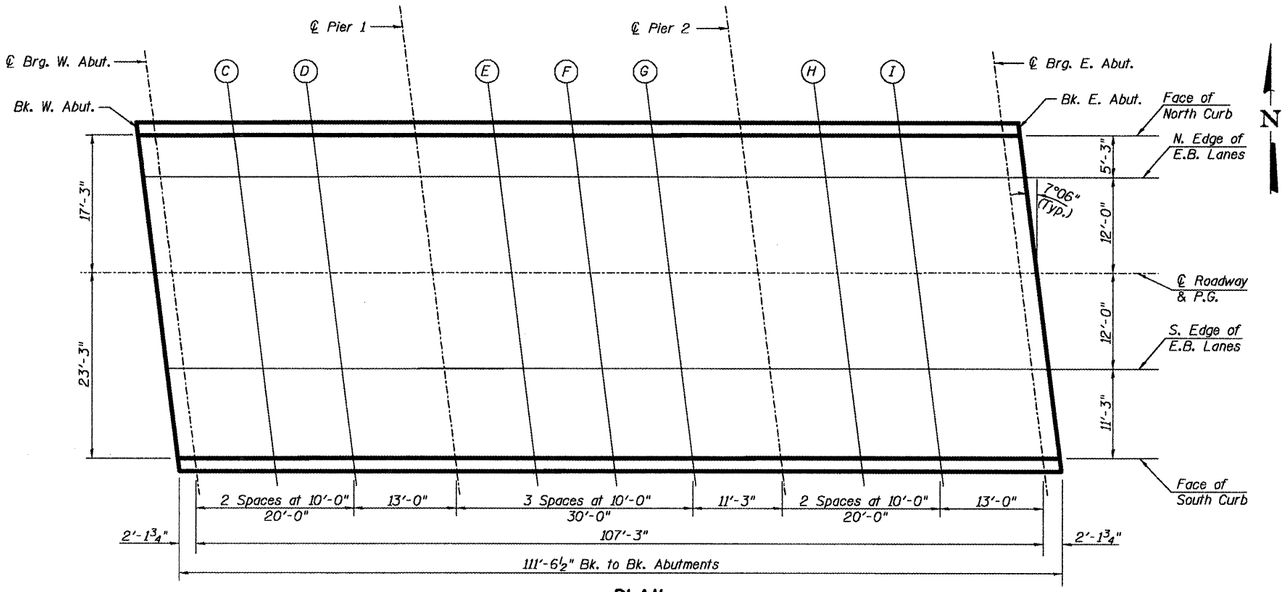

PLAN

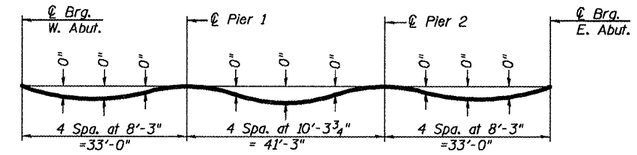

DEAD LOAD DEFLECTION DIAGRAM

(Includes weight of concrete only.)

Note: The above deflections are not to be used in the field if the engineer is working from the grade elevations adjusted for dead load deflections as shown on this sheet.

FACE OF NORTH CURB

Location	Station	Offset (ft)	Theoretical Grade Elevations	Theoretical Grade Elevations Adjusted For Dead Load Deflection
Bk. of W. Abut.	569+59.34	-17.25	749.97	749.97
℄ Brg. W. Abut.	569+61.49	-17.25	749.97	749.97
C	569+71.49	-17.25	750.01	750.01
D	569+81.49	-17.25	750.05	750.05
℄ Pier 1	569+94.49	-17.25	750.09	750.09
E	570+04.49	-17.25	750.13	750.13
F	570+14.49	-17.25	750.17	750.17
G	570+24.49	-17.25	750.20	750.20
℄ Pier 2	570+35.74	-17.25	750.24	750.24
H	570+45.74	-17.25	750.28	750.28
I	570+55.74	-17.25	750.31	750.31
℄ Brg. E. Abut.	570+68.74	-17.25	750.36	750.36
Bk. of E. Abut.	570+70.88	-17.25	750.37	750.37

SOUTH EDGE OF E.B. LANES

Location	Station	Offset (ft)	Theoretical Grade Elevations	Theoretical Grade Elevations Adjusted For Dead Load Deflection
Bk. of W. Abut.	569+62.98	12.00	750.09	750.09
℄ Brg. W. Abut.	569+65.13	12.00	750.10	750.10
C	569+75.13	12.00	750.13	750.13
D	569+85.13	12.00	750.17	750.17
℄ Pier 1	569+98.13	12.00	750.22	750.22
E	570+08.13	12.00	750.25	750.25
F	570+18.13	12.00	750.29	750.29
G	570+28.13	12.00	750.32	750.32
℄ Pier 2	570+39.38	12.00	750.36	750.36
H	570+49.38	12.00	750.40	750.40
I	570+59.38	12.00	750.44	750.44
℄ Brg. E. Abut.	570+72.38	12.00	750.48	750.48
Bk. of E. Abut.	570+74.53	12.00	750.49	750.49

P.G. & ℄ ROADWAY

Location	Station	Offset (ft)	Theoretical Grade Elevations	Theoretical Grade Elevations Adjusted For Dead Load Deflection
Bk. of W. Abut.	569+61.49	0.00	750.27	750.27
℄ Brg. W. Abut.	569+63.64	0.00	750.28	750.28
C	569+73.64	0.00	750.32	750.32
D	569+83.64	0.00	750.35	750.35
℄ Pier 1	569+96.64	0.00	750.40	750.40
E	570+06.64	0.00	750.43	750.43
F	570+16.64	0.00	750.47	750.47
G	570+26.64	0.00	750.51	750.51
℄ Pier 2	570+37.89	0.00	750.55	750.55
H	570+47.89	0.00	750.58	750.58
I	570+57.89	0.00	750.62	750.62
℄ Brg. E. Abut.	570+70.89	0.00	750.67	750.67
Bk. of E. Abut.	570+73.03	0.00	750.67	750.67

NORTH EDGE OF E.B. LANES

Location	Station	Offset (ft)	Theoretical Grade Elevations	Theoretical Grade Elevations Adjusted For Dead Load Deflection
Bk. of W. Abut.	569+59.99	-12.00	750.08	750.08
℄ Brg. W. Abut.	569+62.14	-12.00	750.09	750.09
C	569+72.14	-12.00	750.12	750.12
D	569+82.14	-12.00	750.16	750.16
℄ Pier 1	569+95.14	-12.00	750.21	750.21
E	570+05.14	-12.00	750.24	750.24
F	570+15.14	-12.00	750.28	750.28
G	570+25.14	-12.00	750.31	750.31
℄ Pier 2	570+36.39	-12.00	750.35	750.35
H	570+46.39	-12.00	750.39	750.39
I	570+56.39	-12.00	750.43	750.43
℄ Brg. E. Abut.	570+69.39	-12.00	750.47	750.47
Bk. of E. Abut.	570+71.54	-12.00	750.48	750.48

FACE OF SOUTH CURB

Location	Station	Offset (ft)	Theoretical Grade Elevations	Theoretical Grade Elevations Adjusted For Dead Load Deflection
Bk. of W. Abut.	569+64.39	23.25	749.86	749.86
℄ Brg. W. Abut.	569+66.53	23.25	749.87	749.87
C	569+76.53	23.25	749.90	749.90
D	569+86.53	23.25	749.94	749.94
℄ Pier 1	569+99.53	23.25	749.99	749.99
E	570+09.53	23.25	750.02	750.02
F	570+19.53	23.25	750.06	750.06
G	570+29.53	23.25	750.09	750.09
℄ Pier 2	570+40.78	23.25	750.13	750.13
H	570+50.78	23.25	750.17	750.17
I	570+60.78	23.25	750.21	750.21
℄ Brg. E. Abut.	570+73.78	23.25	750.25	750.25
Bk. of E. Abut.	570+75.93	23.25	750.26	750.26

All offsets measured from ℄ Roadway of South Structure.

DECK ELEVATIONS -2
(SOUTH STRUCTURE)
I-74 OVER TOWNSHIP ROAD 205
F.A.I. RTE. 74 - SEC. 48-(27HB-5)I,I-1
KNOX COUNTY
STATION 570+11.72
STRUCTURE NO. 048-0011 (WB), 0012 (EB)

LIN ENGINEERING, LTD.
Consulting Engineers
Chatham, Illinois

Designed By: ESH | Checked By: MTH | Drawn By: ESH
Date: 10/2008 | File: 048-0011,0012E.dgn

SHEET NO. 5
18 SHEETS

F.A.I. RTE.	SECTION	COUNTY	TOTAL SHEETS	SHEET NO.
74	48-(27HB-5)I,I-1	KNOX	104	44
		CONTRACT NO. 68062		
FED. ROAD DIST. NO.	ILLINOIS	FED. AID PROJECT		

D-94-048-00

STATE OF ILLINOIS
DEPARTMENT OF TRANSPORTATION

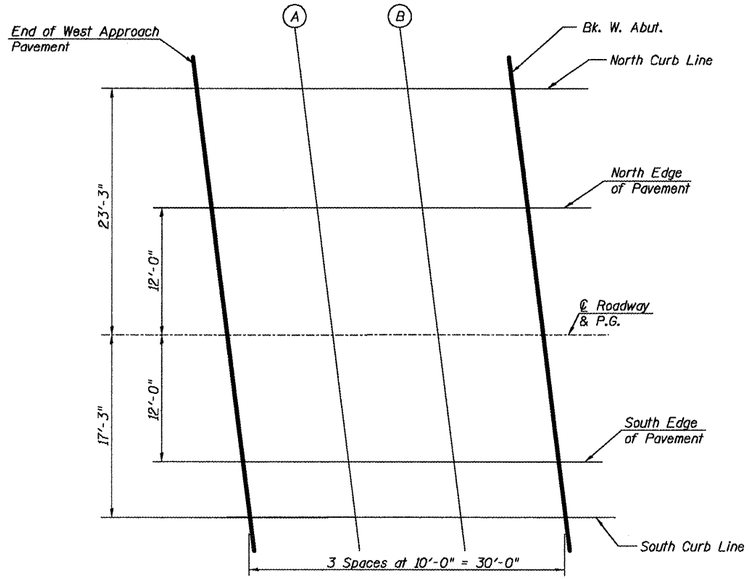

PLAN - WEST APPROACH

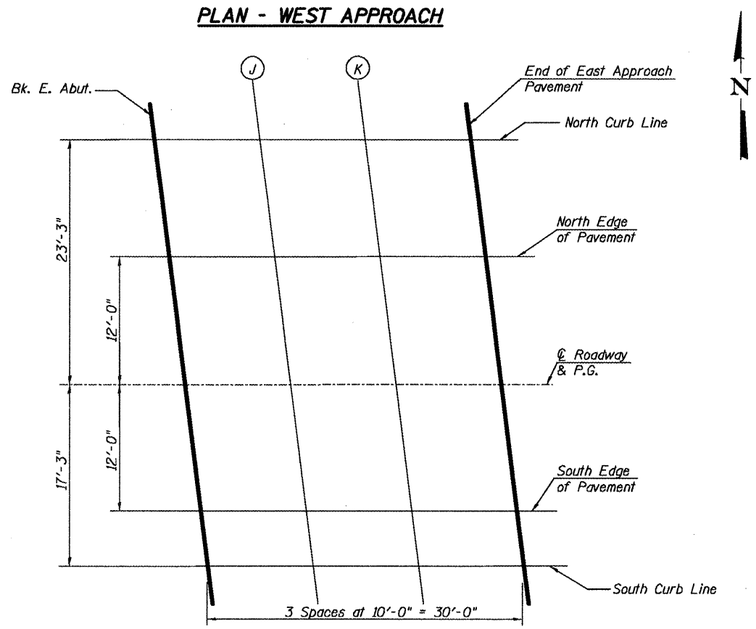

PLAN - EAST APPROACH

NORTH CURB LINE

Location	Station	Offset (ft)	Theoretical Grade Elevations
End W. Appr. Pav't.	569+17.62	-23.25	749.69
A	569+27.62	-23.25	749.73
B	569+37.62	-23.25	749.76
Bk. W. Abut.	569+47.62	-23.25	749.80
Bk. E. Abut.	570+59.16	-23.25	750.20
J	570+69.16	-23.25	750.24
K	570+79.16	-23.25	750.27
End E. Appr. Pav't.	570+89.16	-23.25	750.31

SOUTH EDGE OF PAVEMENT

Location	Station	Offset (ft)	Theoretical Grade Elevations
End W. Appr. Pav't.	569+22.01	12.00	749.94
A	569+32.01	12.00	749.98
B	569+42.01	12.00	750.01
Bk. W. Abut.	569+52.01	12.00	750.05
Bk. E. Abut.	570+63.56	12.00	750.45
J	570+73.56	12.00	750.49
K	570+83.56	12.00	750.52
End E. Appr. Pav't.	570+93.56	12.00	750.56

NORTH EDGE OF PAVEMENT

Location	Station	Offset (ft)	Theoretical Grade Elevations
End W. Appr. Pav't.	569+19.02	-12.00	749.93
A	569+29.02	-12.00	749.97
B	569+39.02	-12.00	750.00
Bk. W. Abut.	569+49.02	-12.00	750.04
Bk. E. Abut.	570+60.57	-12.00	750.44
J	570+70.57	-12.00	750.48
K	570+80.57	-12.00	750.51
End E. Appr. Pav't.	570+90.57	-12.00	750.55

SOUTH CURB LINE

Location	Station	Offset (ft)	Theoretical Grade Elevations
End W. Appr. Pav't.	569+22.67	17.25	749.83
A	569+32.67	17.25	749.87
B	569+42.67	17.25	749.91
Bk. W. Abut.	569+52.67	17.25	749.94
Bk. E. Abut.	570+64.21	17.25	750.34
J	570+74.21	17.25	750.38
K	570+84.21	17.25	750.42
End E. Appr. Pav't.	570+94.21	17.25	750.45

℄ ROADWAY & P.G.

Location	Station	Offset (ft)	Theoretical Grade Elevations
End W. Appr. Pav't.	569+20.52	0.00	750.12
A	569+30.52	0.00	750.16
B	569+40.52	0.00	750.20
Bk. W. Abut.	569+50.52	0.00	750.23
Bk. E. Abut.	570+62.06	0.00	750.63
J	570+72.06	0.00	750.67
K	570+82.06	0.00	750.71
End E. Appr. Pav't.	570+92.06	0.00	750.74

All offsets measured from ℄ Roadway of North Structure.

APPROACH PAVEMENT ELEVATIONS -1
(NORTH STRUCTURE)
I-74 OVER TOWNSHIP ROAD 205
F.A.I. RTE. 74 - SEC. 48-(27HB-5)I,I-1
KNOX COUNTY
STATION 570+11.72
STRUCTURE NO. 048-0011 (WB), 0012 (EB)

LIN ENGINEERING, LTD.
Consulting Engineers
Chatham, Illinois

Designed By: ESH | Checked By: MTH | Drawn By: ESH
Date: 10/2008 | File: 048-0011.002E.dgn

SHEET NO. 6
18 SHEETS

F.A.I. RTE.	SECTION	COUNTY	TOTAL SHEETS	SHEET NO.
74	48-(27HB-5)I,I-1	KNOX	104	45
		CONTRACT NO. 68062		
FED. ROAD DIST. NO.	ILLINOIS	FED. AID PROJECT		

D-94-048-00

STATE OF ILLINOIS
DEPARTMENT OF TRANSPORTATION

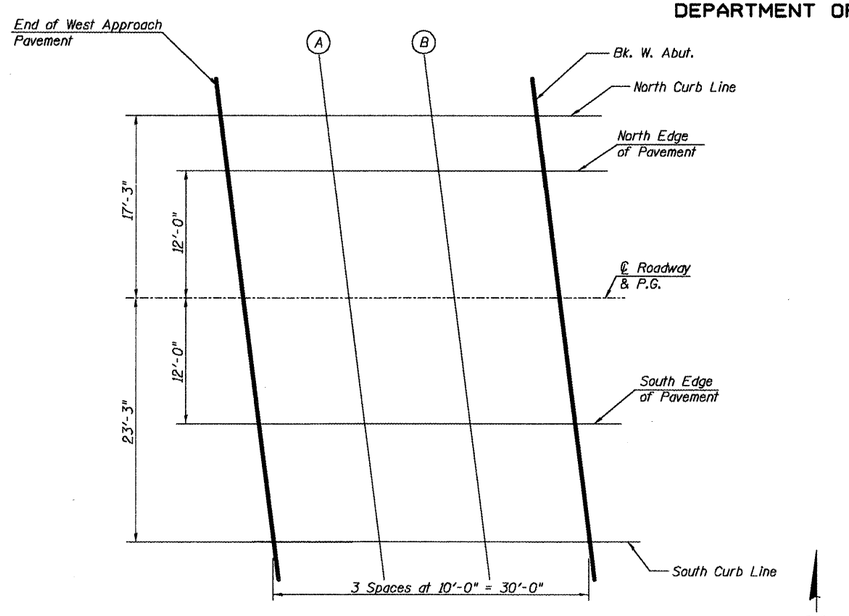

PLAN - WEST APPROACH

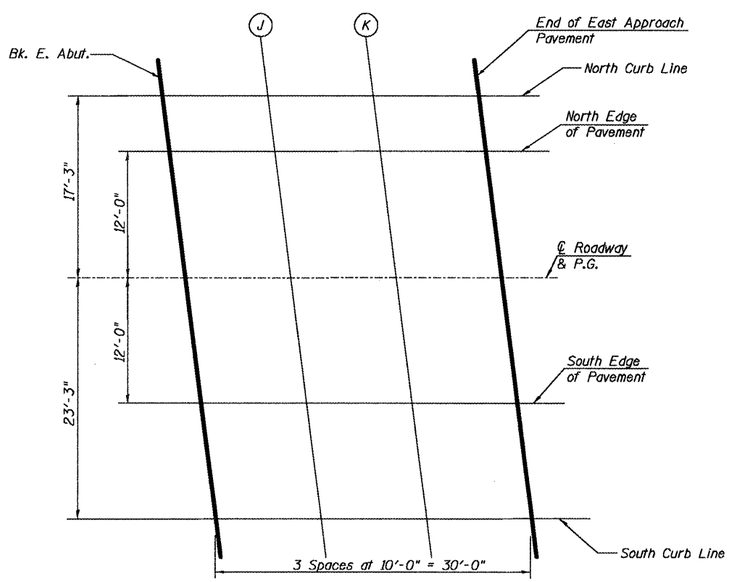

PLAN - EAST APPROACH

N

NORTH CURB LINE

Location	Station	Offset (ft)	Theoretical Grade Elevations
End W. Appr. Pav't.	569+29.34	-17.25	749.86
A	569+39.34	-17.25	749.89
B	569+49.34	-17.25	749.93
Bk. W. Abut.	569+59.34	-17.25	749.97
Bk. E. Abut.	570+70.88	-17.25	750.37
J	570+80.88	-17.25	750.40
K	570+90.88	-17.25	750.44
End E. Appr. Pav't	571+00.88	-17.25	750.48

SOUTH EDGE OF PAVEMENT

Location	Station	Offset (ft)	Theoretical Grade Elevations
End W. Appr. Pav't.	569+32.98	12.00	749.98
A	569+42.98	12.00	750.02
B	569+52.98	12.00	750.05
Bk. W. Abut.	569+62.98	12.00	750.09
Bk. E. Abut.	570+74.53	12.00	750.49
J	570+84.53	12.00	750.53
K	570+94.53	12.00	750.56
End E. Appr. Pav't	571+04.53	12.00	750.60

NORTH EDGE OF PAVEMENT

Location	Station	Offset (ft)	Theoretical Grade Elevations
End W. Appr. Pav't.	569+29.99	-12.00	749.97
A	569+39.99	-12.00	750.01
B	569+49.99	-12.00	750.04
Bk. W. Abut.	569+59.99	-12.00	750.08
Bk. E. Abut.	570+71.54	-12.00	750.48
J	570+81.54	-12.00	750.52
K	570+91.54	-12.00	750.55
End E. Appr. Pav't	571+01.54	-12.00	750.59

SOUTH CURB LINE

Location	Station	Offset (ft)	Theoretical Grade Elevations
End W. Appr. Pav't.	569+34.39	23.25	749.75
A	569+44.39	23.25	749.79
B	569+54.39	23.25	749.82
Bk. W. Abut.	569+64.39	23.25	749.86
Bk. E. Abut.	570+75.93	23.25	750.26
J	570+85.93	23.25	750.30
K	570+95.93	23.25	750.33
End E. Appr. Pav't	571+05.93	23.25	750.37

℄ ROADWAY & P.G.

Location	Station	Offset (ft)	Theoretical Grade Elevations
End W. Appr. Pav't.	569+31.49	0.00	750.16
A	569+41.49	0.00	750.20
B	569+51.49	0.00	750.24
Bk. W. Abut.	569+61.49	0.00	750.27
Bk. E. Abut.	570+73.03	0.00	750.67
J	570+83.03	0.00	750.71
K	570+93.03	0.00	750.74
End E. Appr. Pav't	571+03.03	0.00	750.78

All offsets measured from ℄ Roadway of South Structure.

APPROACH PAVEMENT ELEVATIONS -2
(SOUTH STRUCTURE)
I-74 OVER TOWNSHIP ROAD 205
F.A.I. RTE. 74 - SEC. 48-(27HB-5)I,I-1
KNOX COUNTY
STATION 570+11.72
STRUCTURE NO. 048-0011 (WB), 0012 (EB)

LIN ENGINEERING, LTD.
Consulting Engineers
Crathern, Illinois

Designed By: ESH | Checked By: MTH | Drawn By: ESH
Date: 10/2006 | File: 048-0011,0012.dgn

SHEET NO. 7
18 SHEETS

F.A.I. RTE.	SECTION	COUNTY	TOTAL SHEETS	SHEET NO.
74	48-(27HB-5)I,I-1	KNOX	104	46
		CONTRACT NO. 68062		
FED. ROAD DIST. NO.	ILLINOIS	FED. AID PROJECT		

D-94-048-00

STATE OF ILLINOIS
DEPARTMENT OF TRANSPORTATION

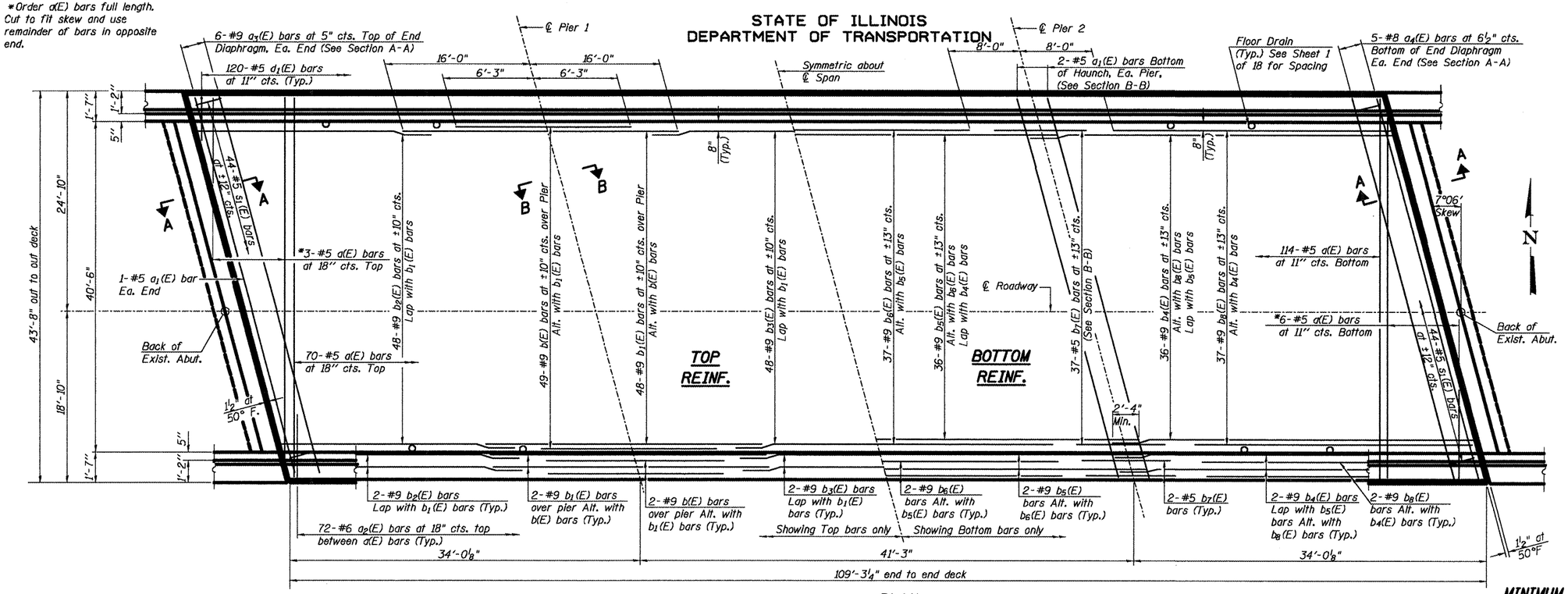

PLAN

(North Structure shown - South Structure Similar, except location of ℄ Roadway)

MINIMUM BAR LAP

(unless otherwise shown)
Top #9 bar = 4'-11"

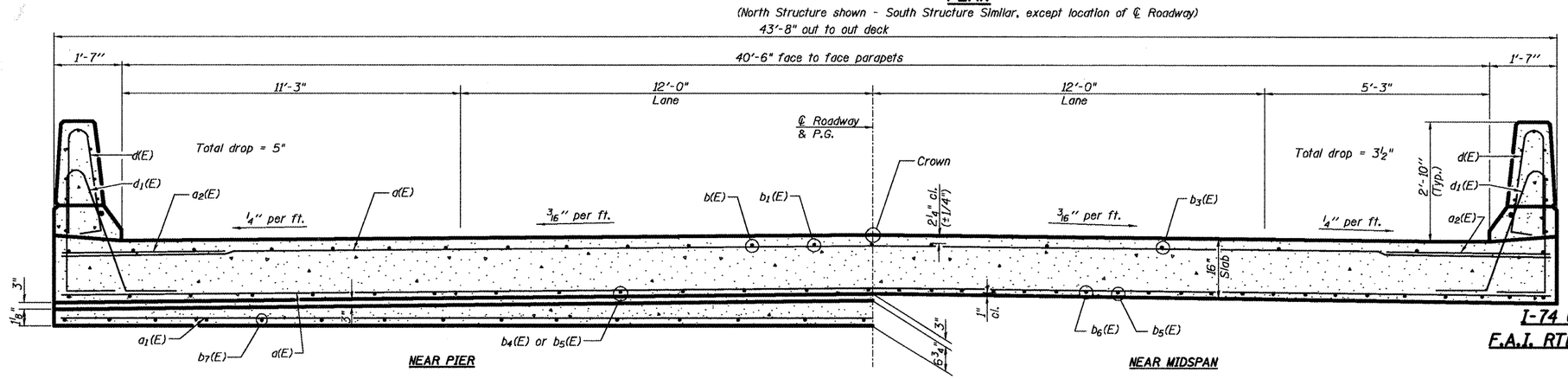

CROSS SECTION

(North Structure Looking East)
(South Structure Looking West)

Notes:
See Sheet 9 of 18 for superstructure details, parapet reinforcement, Section A-A, Section B-B and Bill of Material.

SUPERSTRUCTURE
I-74 OVER TOWNSHIP ROAD 205
F.A.I. RTE. 74 - SEC. 48-(27HB-5)I,I-1
KNOX COUNTY
STATION 570+11.72
STRUCTURE NO. 048-0011 (WB), 0012 (EB)

LIN ENGINEERING, LTD.
Consulting Engineers
Chatham, Illinois

Designed By: ESH | Checked By: MTH | Drawn By: ESH
Date: 10/2008 | File: 048-0011,0012.dgn

SHEET NO. 8
18 SHEETS

F.A.I. RTE.	SECTION	COUNTY	TOTAL SHEETS	SHEET NO.
74	48-(27HB-5)I,I-1	KNOX	104	47
		CONTRACT NO. 68062		
FED. ROAD DIST. NO.	ILLINOIS	FED. AID PROJECT		

D-94-048-00

STATE OF ILLINOIS
DEPARTMENT OF TRANSPORTATION

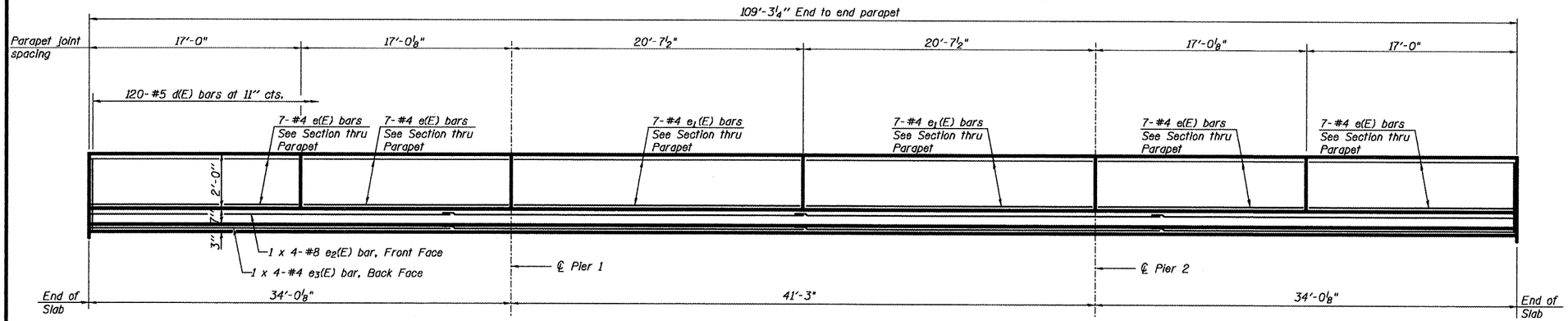

SUPERSTRUCTURE BILL OF MATERIAL

(Both Superstructures)

Bar	No.	Size	Length	Shape
d(E)	386	#5	43'-5"	
a1(E)	12	#5	43'-9"	
a2(E)	288	#6	6'-0"	
a3(E)	24	#9	43'-9"	
a4(E)	20	#8	43'-9"	
b(E)	212	#9	12'-6"	
b1(E)	208	#9	32'-0"	
b2(E)	208	#9	22'-9"	
b3(E)	104	#9	19'-1"	
b4(E)	160	#9	36'-5"	
b5(E)	80	#9	43'-7"	
b6(E)	82	#9	25'-3"	
b7(E)	164	#5	8'-1"	
b8(E)	164	#9	27'-1"	
s1(E)	176	#5	8'-6"	
d(E)	480	#5	5'-7"	
d1(E)	480	#5	8'-0"	
e(E)	112	#4	16'-9"	
e1(E)	56	#4	20'-5"	
e2(E)	16	#8	29'-10"	
e3(E)	16	#4	28'-3"	
Reinforcement Bars, Epoxy Coated			Pound	148150
Concrete Superstructure			Cu. Yd.	566.3

Bars indicated thus 1 x 4 -#8 etc. indicates 1 line of bars with 4 lengths per line.

Hatched area to be poured after superstructure forms have been removed. Quantity of concrete included with Concrete Superstructure.

MINIMUM BAR LAP

(Parapet)
#4 bar = 1'-4"
#8 bar = 3'-5"

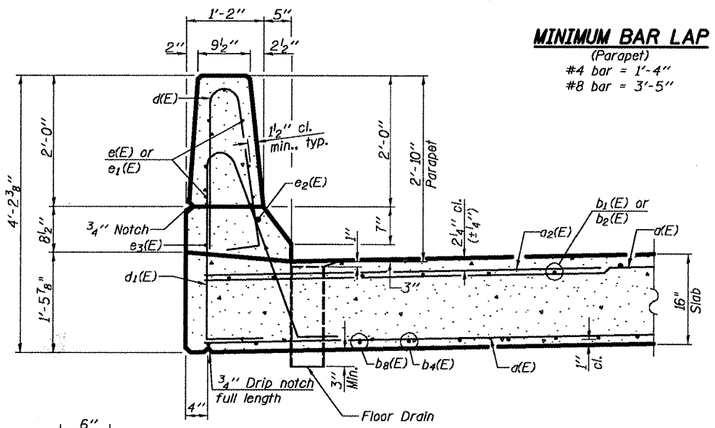

SECTION THRU PARAPET

INSIDE ELEVATION OF PARAPET

(North Parapet Shown)

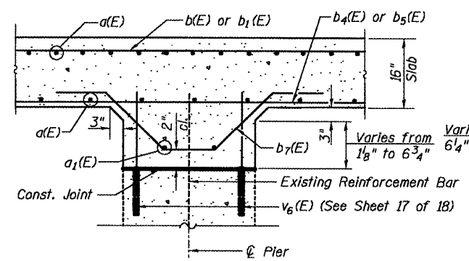

SECTION B-B

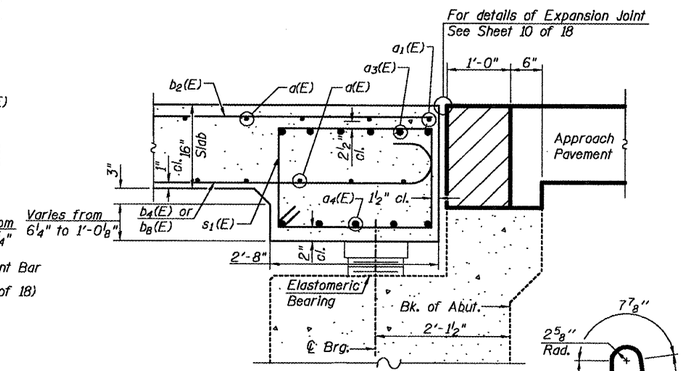

SECTION A-A

(Horizontal Dimensions at Rt. L's)

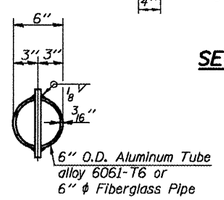

TOP PLAN

(Showing Aluminum Tube)

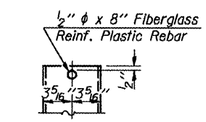

FIBERGLASS PIPE

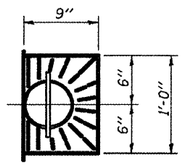

TOP PLAN

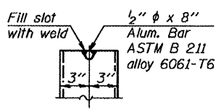

ALUMINUM TUBE

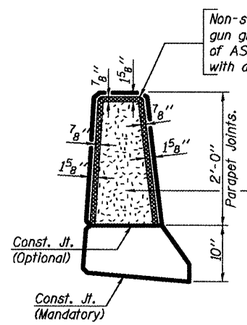

PARAPET JOINT DETAILS

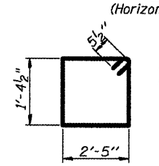

BAR s1(E)

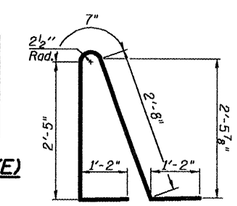

BAR d1(E)

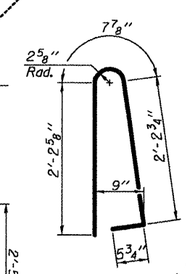

BAR d(E)

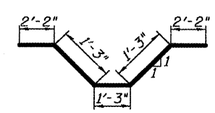

BAR b7(E)

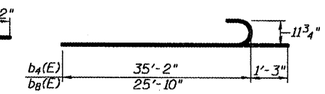

BARS b4(E) and b8(E)

Notes:
The exterior surfaces of the floor drains shall be coated or pigmented by the manufacturer with a color that matches the concrete.
Fiberglass pipe shall conform to ASTM D 2996, with short-time rupture strength hoop tensile stress of 30,000 p.s.i. minimum.

SUPERSTRUCTURE DETAILS
I-74 OVER TOWNSHIP ROAD 205
F.A.I. RTE. 74 - SEC. 48-(27HB-5)I,I-1
KNOX COUNTY
STATION 570+11.72
STRUCTURE NO. 048-0011 (WB), 0012 (EB)

LIN ENGINEERING, LTD.
Consulting Engineers
Chatham, Illinois

Designed By: ESH | Checked By: MTH | Drawn By: ESH
Date: 10/2008 | File: 048-0011,0012.dgn

SHEET NO. 9
18 SHEETS

F.A.I. RTE.	SECTION	COUNTY	TOTAL SHEETS	SHEET NO.
74	48-(27HB-5)I,I-1	KNOX	104	48
		CONTRACT NO. 68062		
FED. ROAD DIST. NO.	ILLINOIS	FED. AID PROJECT		

D-94-048-00

*Granular or solid flux filled headed studs conforming to Article 1006.32 of the Std. Specs., automatically end welded.

STATE OF ILLINOIS
DEPARTMENT OF TRANSPORTATION

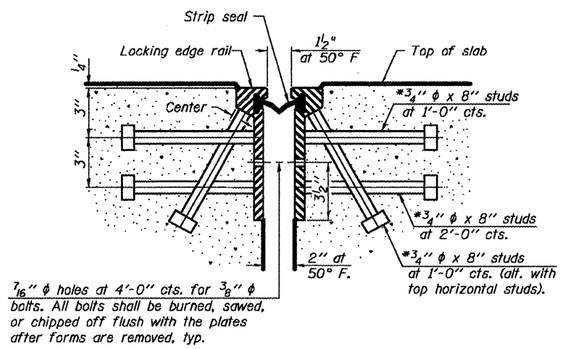

SECTION THRU ROLLED RAIL JOINT

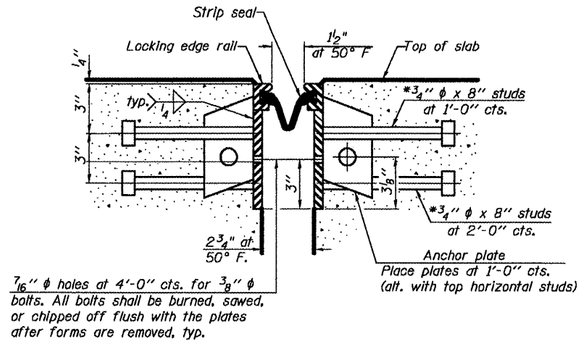

SECTION THRU WELDED RAIL JOINT

Notes:

The strip seal shall be made continuous and shall have a minimum thickness of ¼". The configuration of the strip seal shall match the configuration of the Locking Edge Rails. Open or "webbed" strip seal gland configurations are not permitted. The gland shall be sized for a maximum rated movement of 4 inches.

The height and thickness of the Locking Edge Rails shown are minimum dimensions. The actual configuration of the Locking Edge Rails and matching strip seal may vary from manufacturer to manufacturer. Flanged edge rails will not be allowed. Locking Edge Rails may be spliced at slope discontinuities and stage construction joints.

The manufacturer's recommended installation methods shall be followed.

The joint opening and deck dimensions detailed on the superstructure are based on a rolled rail expansion joint. If the Contractor elects to use the welded rail expansion joint, the opening and deck dimensions shall be modified according to the dimensions detailed on this sheet. Required modifications shall be made at no additional cost to the State.

All steel components shall be galvanized after fabrication according to Article 520.03 of the Standard Specifications.

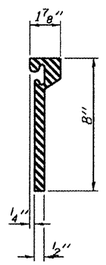

ROLLED EXTRUDED RAIL

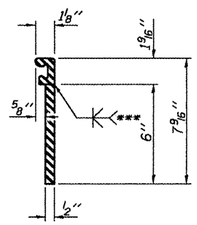

WELDED RAIL

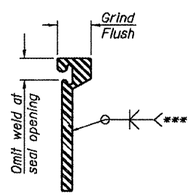

***Back gouge not required if complete joint penetration is verified by mock-up.

LOCKING EDGE RAIL SPLICE

The inside of the locking edge rail groove shall be free of weld residue.

LOCKING EDGE RAILS

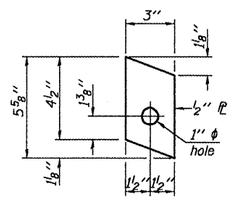

ANCHOR ℄

(for welded rail)

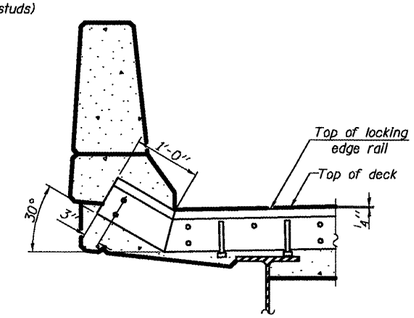

AT PARAPET

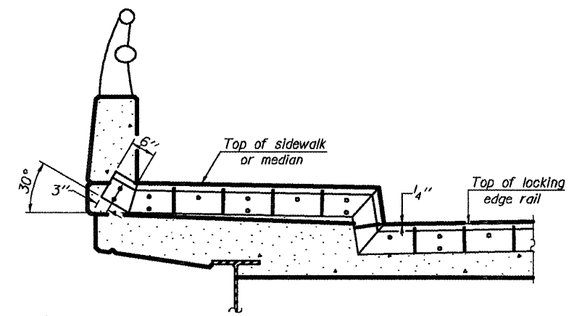

AT SIDEWALK OR MEDIAN

Shorter plates with a single row of studs at 12" cts. may be necessary on medians which are shallower than 9". See manufacturer's recommendation.

TYPICAL END TREATMENTS

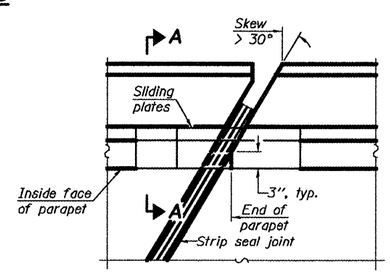

PLAN

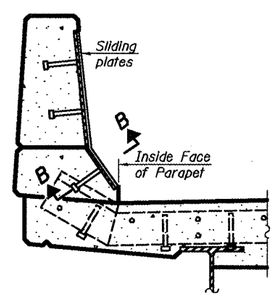

SECTION A-A

POINT BLOCK DETAILS

(for skews > 30°)

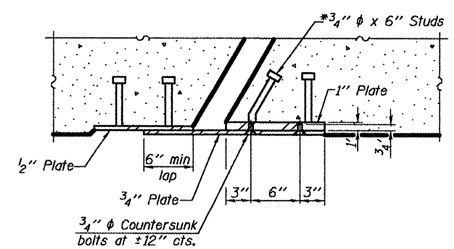

SECTION B-B

BILL OF MATERIAL

Item	Unit	Total
Preformed Joint Strip Seal	Foot	172.0

PREFORMED JOINT STRIP SEAL
I-74 OVER TOWNSHIP ROAD 205
F.A.I. RTE. 74 - SEC. 48-(27HB-5)I,I-1
KNOX COUNTY
STATION 570+11.72
STRUCTURE NO. 048-0011 (WB), 0012 (EB)

LIN ENGINEERING, LTD.
Consulting Engineers
Chatham, Illinois

Designed By: ESH | Checked By: MTH | Drawn By: ESH
Date: 10/2008 | File: 048-0011,0012.dgn

SHEET NO. 10
18 SHEETS

F.A.I. RTE.	SECTION	COUNTY	TOTAL SHEETS	SHEET NO.
74	48-(27HB-5)I,I-1	KNOX	104	49
		CONTRACT NO. 68062		
FED. ROAD DIST. NO.	ILLINOIS	FED. AID PROJECT		

EJ-SSJ 5-16-08

D-94-048-00

STATE OF ILLINOIS
DEPARTMENT OF TRANSPORTATION

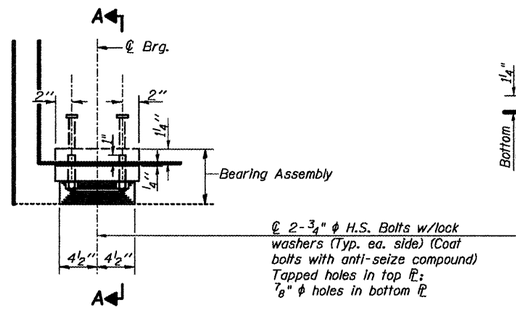

ELEVATION AT ABUT.

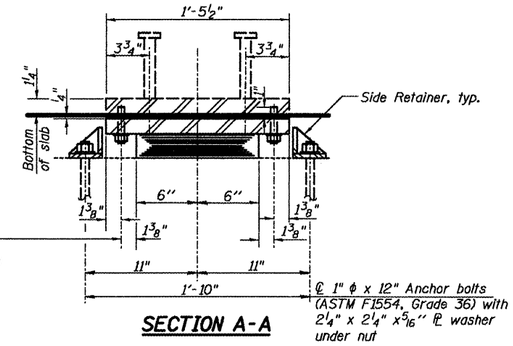

SECTION A-A

TYPE I ELASTOMERIC EXP. BRG.

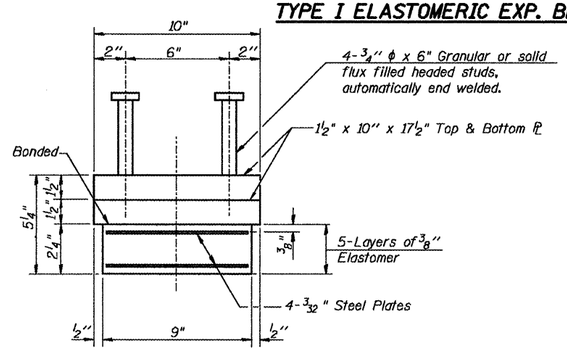

BEARING ASSEMBLY

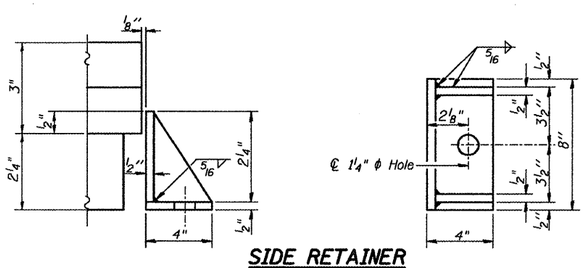

SIDE RETAINER

Equivalent rolled angle with stiffeners will be allowed in lieu of welded plates.

Notes:

Anchor bolts shall be ASTM F1554 all-thread (or an Engineer-approved alternate material) of the grade(s) and diameter(s) specified. ASTM A307 Grade C anchor bolts may be used in lieu of ASTM F1554 Grade 36 (Fy=36ksi). The corresponding specified grade of AASHTO M314 anchor bolts may be used in lieu of ASTM F1554.

Side retainers and anchor bolts for side retainers shall be installed in drilled holes before slab is poured.

Drilled and set anchor bolts shall be installed according to Article 521.06 of the Standard Specifications.

Side retainers, studs, H.S. bolts and other steel members required for the bearing assembly shall be included in the cost of Elastomeric Bearing Assembly, Type I.

All embedded and separate bearing plates, side retainers, anchor bolts, nuts and washers shall be galvanized according to AASHTO M111 or M232 (as applicable).

BILL OF MATERIAL

Item	Unit	Total
Elastomeric Bearing Assembly, Type I	Each	24
Anchor Bolts, 1"	Each	48

BEARING DETAILS
I-74 OVER TOWNSHIP ROAD 205
F.A.I. RTE. 74 - SEC. 48-(27HB-5)I,I-1
KNOX COUNTY
STATION 570+11.72
STRUCTURE NO. 048-0011 (WB), 0012 (EB)

LIN ENGINEERING, LTD.
Consulting Engineers
Chatham, Illinois

Designed By: ESH | Checked By: MTH | Drawn By: ESH
Date: 10/2008 | File: 048-0011,0012.dgn

SHEET NO. 11
18 SHEETS

F.A.I. RTE.	SECTION	COUNTY	TOTAL SHEETS	SHEET NO.
74	48-(27HB-5)I,I-1	KNOX	104	50
		CONTRACT NO. 68062		
FED. ROAD DIST. NO.	ILLINOIS	FED. AID PROJECT		

D-94-048-00

STATE OF ILLINOIS
DEPARTMENT OF TRANSPORTATION

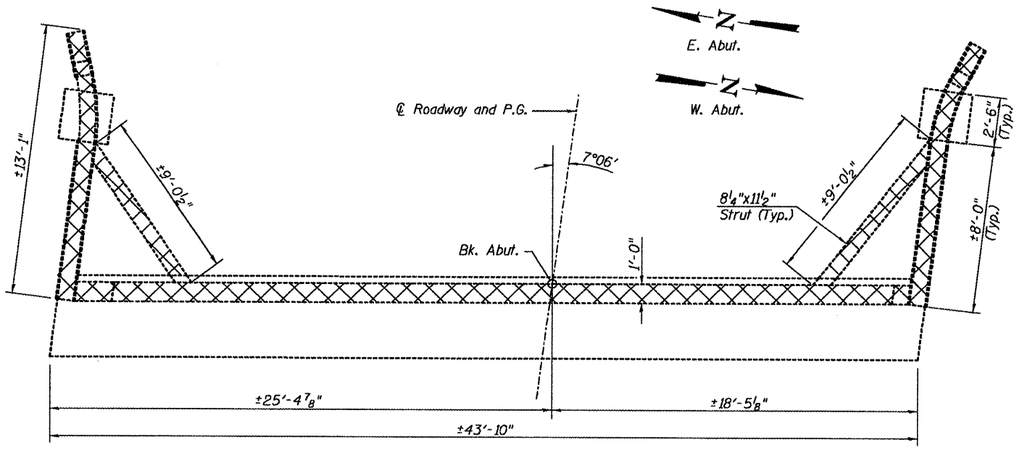

PLAN

(East Abutment North Structure and West Abutment South Structure)

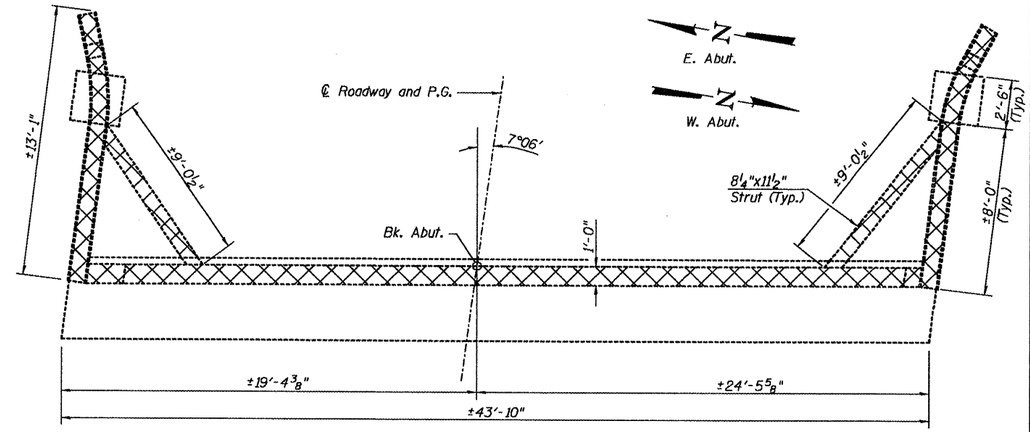

PLAN

(West Abutment North Structure and East Abutment South Structure)

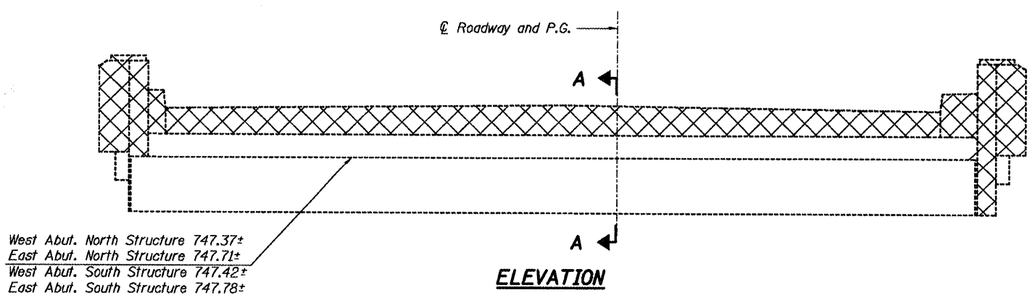

ELEVATION

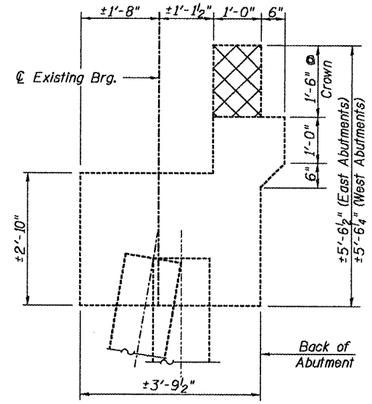

SECTION A-A

(Horizontal dimensions @ Rt. ∟'s)

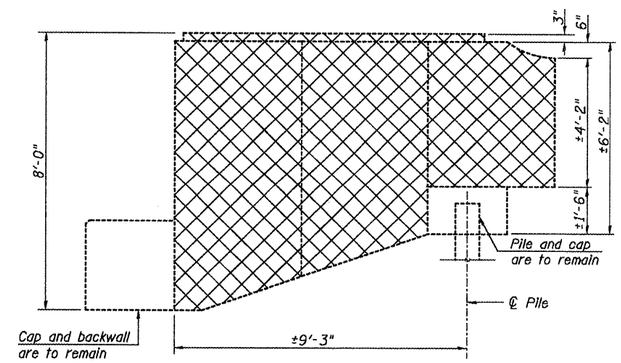

SIDE ELEVATION OF WINGWALL

BILL OF MATERIAL

(Four Abutments)

	ITEM	UNIT	QUANTITY
*	Concrete Removal	Cu. Yd.	33.6

* Quantity does not include approach slab removal.

Notes:

Cross Hatched Area Indicates Concrete Removal.

Existing reinforcement shall be cleaned and incorporated into the new construction. Cost included with Concrete Removal.

Burn existing bearing anchor bolts flush with existing concrete surface. Grind existing anchor bolts smooth and seal with epoxy. Cost included with Concrete Removal.

Any reinforcement bars that are damaged during concrete removal operations shall be repaired or replace using an approved bar splicer or anchorage system in accordance with IDOT Standard Specification Article 501.05. Cost included in Concrete Removal.

CONCRETE REMOVAL
I-74 OVER TOWNSHIP ROAD 205
F.A.I. RTE. 74 - SEC. 48-(27HB-5)I,I-1
KNOX COUNTY
STATION 570+11.72
STRUCTURE NO. 048-0011 (WB), 0012 (EB)

LIN ENGINEERING, LTD.
Consulting Engineers
Chatham, Illinois

Designed By: ESH | Checked By: MTH | Drawn By: ESH
Date: 10/2006 | File: 048-0011,0012.dgn

SHEET NO. 12
18 SHEETS

F.A.I. RTE.	SECTION	COUNTY	TOTAL SHEETS	SHEET NO.
74	48-(27HB-5)I,I-1	KNOX	104	51
		CONTRACT NO. 68062		
FED. ROAD DIST. NO.	ILLINOIS	FED. AID PROJECT		

D-94-048-00

STATE OF ILLINOIS
DEPARTMENT OF TRANSPORTATION

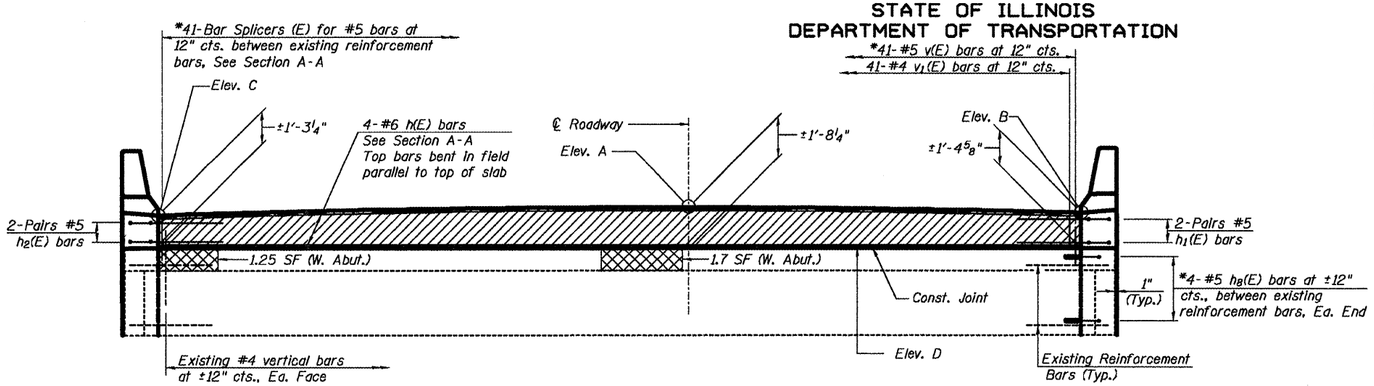

ELEVATION

E. Abut. (Looking East)
W. Abut. (Looking West)

*Epoxy Grout v(E) and h_8(E) bars and Bar Splicers min. 9" deep in field drilled holes in accordance with Section 584 of the Standard Specifications.

ELEVATION TABLE

Location	Elev. A	Elev. B	Elev. C	Elev. D
E. Abut.	750.63	750.34	750.20	±748.92
W. Abut.	750.27	749.97	749.86	±748.61

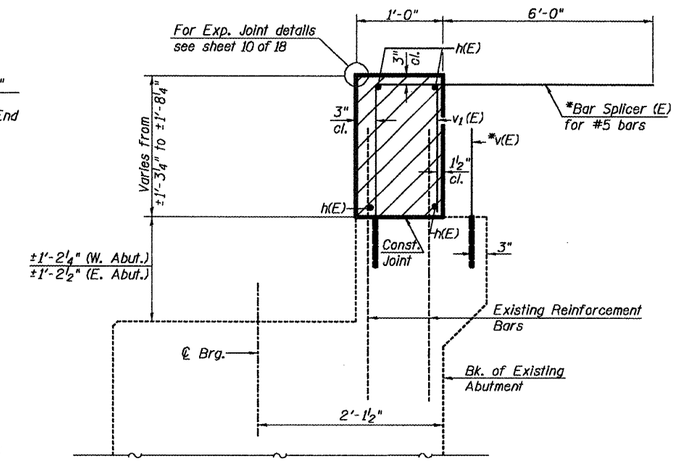

SECTION A-A

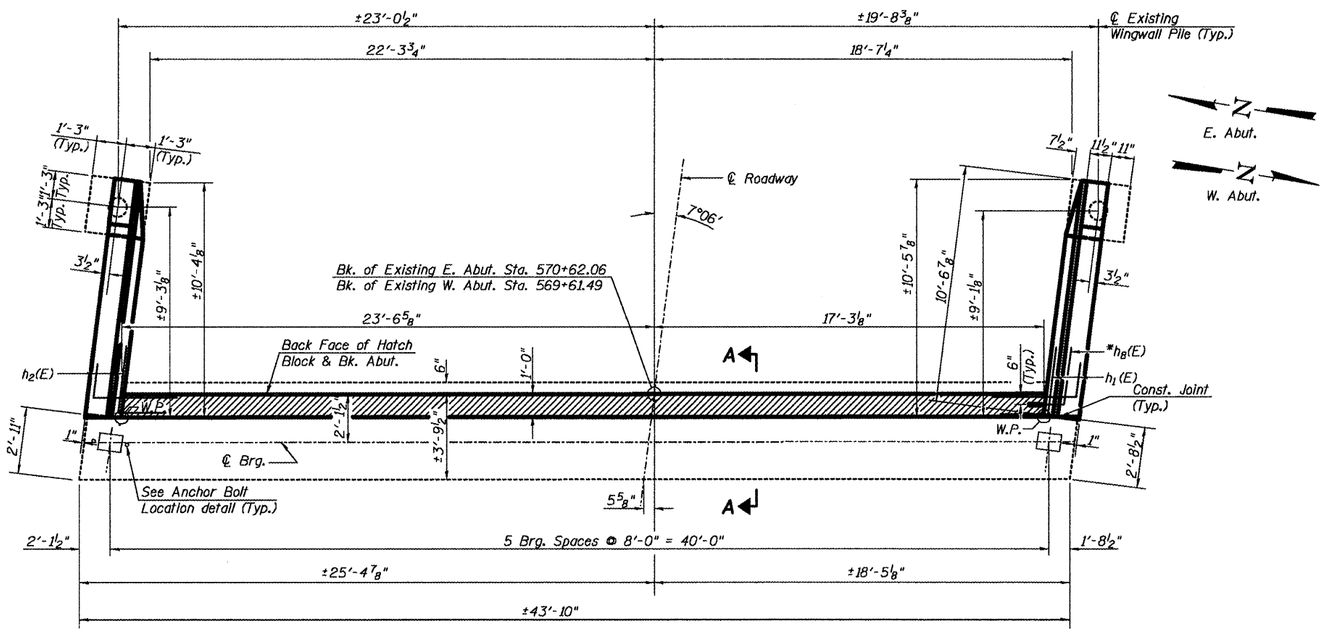

PLAN

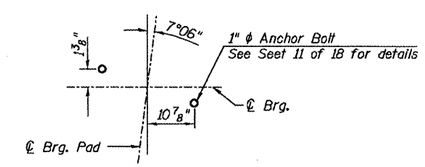

ANCHOR BOLT LOCATION

Notes:
For clarity existing piles in abutment cap are not shown.
Hatched area to be poured after superstructure false work has been removed. Quantity of Concrete is included with Concrete Superstructure on Sheet 9 of 18.
Existing reinforcement shall be cleaned and incorporated into the new construction. Cost included with Concrete Removal.
See Sheet 18 of 18 for Bar Splicer Details.
Work this sheet with Sheet 15 of 18.

Indicates Structural Repair of Concrete (Depth Equal To or Less Than 5 in).

ABUTMENT MODIFICATIONS -1
(EAST ABUTMENT -NORTH STRUCTURE)
(WEST ABUTMENT -SOUTH STRUCTURE)
I-74 OVER TOWNSHIP ROAD 205
F.A.I. RTE. 74 - SEC. 48-(27HB-5)I,I-1
KNOX COUNTY
STATION 570+11.72
STRUCTURE NO. 048-0011 (WB), 0012 (EB)

LIN ENGINEERING, LTD.
Consulting Engineers
Chatham, Illinois
Designed By: ESH | Checked By: MTH | Drawn By: ESH
Date: 10/2006 | File: 048-0011,0012.dgn

SHEET NO. 13
18 SHEETS

F.A.I. RTE.	SECTION	COUNTY	TOTAL SHEETS	SHEET NO.
74	48-(27HB-5)I,I-1	KNOX	104	52
		CONTRACT NO. 68062		
FED. ROAD DIST. NO.	ILLINOIS	FED. AID PROJECT		

D-94-048-00

STATE OF ILLINOIS
DEPARTMENT OF TRANSPORTATION

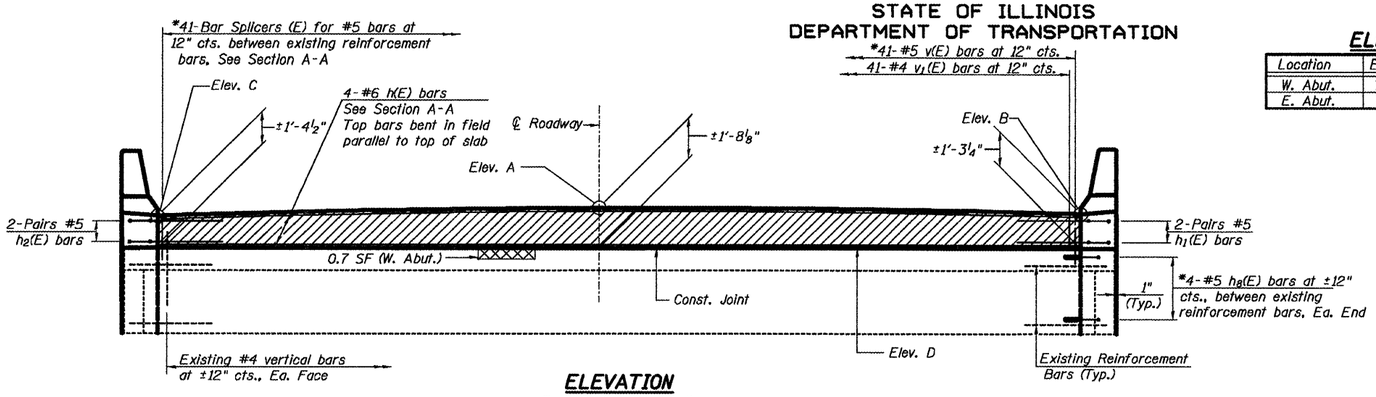

ELEVATION

E. Abut. (Looking East)
W. Abut. (Looking West)

*Epoxy Grout v(E) and h8(E) bars and Bar Splicers min. 9" deep in field drilled holes in accordance with Section 584 of the Standard Specifications.

ELEVATION TABLE

Location	Elev. A	Elev. B	Elev. C	Elev. D
W. Abut.	750.23	749.80	749.94	±748.56
E. Abut.	750.67	750.26	750.37	±748.99

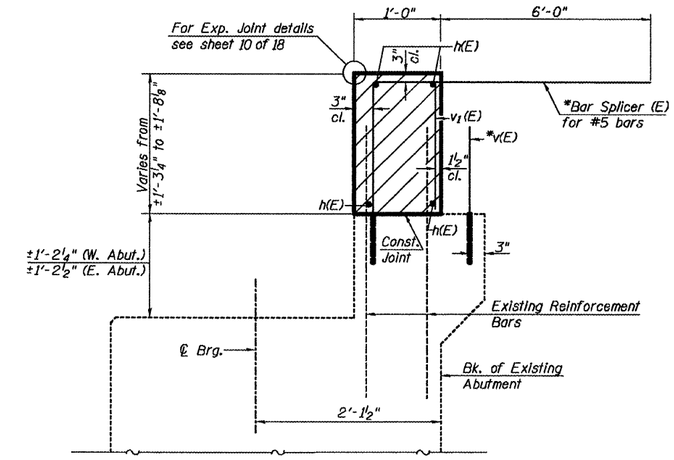

SECTION A-A

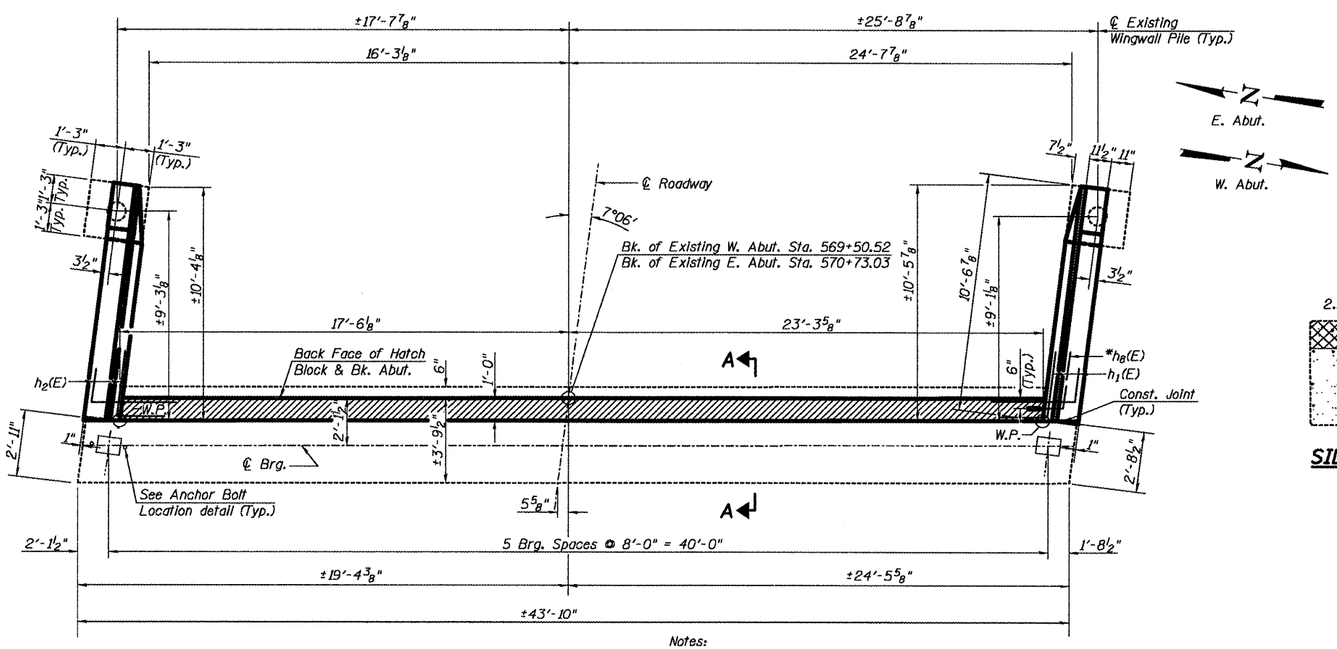

PLAN

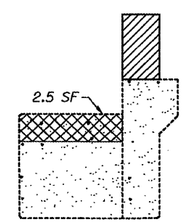

SIDE ELEVATION

West Abutment
(Looking South)

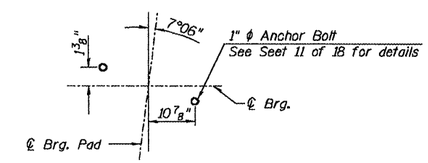

ANCHOR BOLT LOCATION

Notes:

For clarity existing piles in abutment cap are not shown.

Hatched area to be poured after superstructure false work has been removed. Quantity of Concrete is included with Concrete Superstructure on Sheet 9 of 18.

Existing reinforcement shall be cleaned and incorporated into the new construction. Cost included with Concrete Removal. See Sheet 18 of 18 for Bar Splicer Details. Work this sheet with Sheet 16 of 18.

Indicates Structural Repair of Concrete (Depth Equal To or Less Than 5 in).

ABUTMENT MODIFICATIONS -2
(WEST ABUTMENT -NORTH STRUCTURE)
(EAST ABUTMENT -SOUTH STRUCTURE)
I-74 OVER TOWNSHIP ROAD 205
F.A.I. RTE. 74 - SEC. 48-(27HB-5)I,I-1
KNOX COUNTY
STATION 570+11.72
STRUCTURE NO. 048-0011 (WB), 0012 (EB)

LIN ENGINEERING, LTD.
Consulting Engineers
Chatham, Illinois

Designed By: ESH | Checked By: MTH | Drawn By: ESH
Date: 10/2008 | File: 048-0011,0012.dgn

SHEET NO. 14
18 SHEETS

F.A.I. RTE.	SECTION	COUNTY	TOTAL SHEETS	SHEET NO.
74	48-(27HB-5)I,I-1	KNOX	104	53

CONTRACT NO. 68062

FED. ROAD DIST. NO. | ILLINOIS | FED. AID PROJECT

D-94-048-00

STATE OF ILLINOIS
DEPARTMENT OF TRANSPORTATION

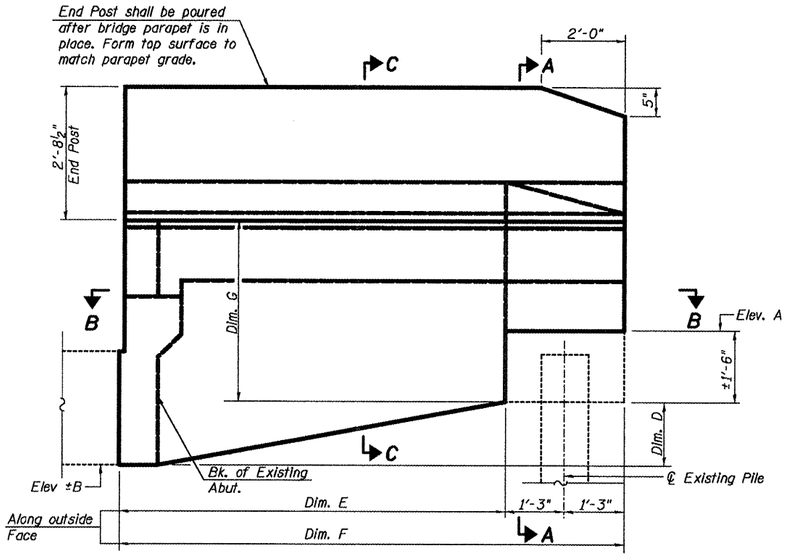

WINGWALL ELEVATION
(Showing Dimensions)

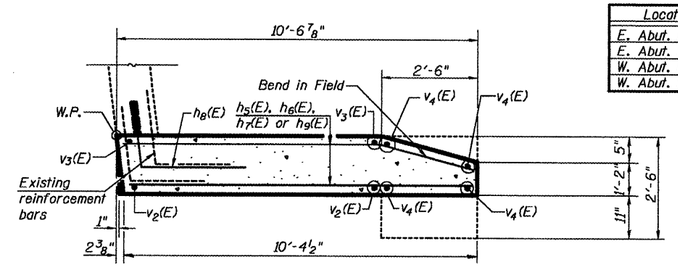

SECTION B-B
North Wingwall of West Abutment shown
South Wingwall of East Abutment shown

ELEVATION & DIMENSION TABLE

Location	Elev. A	Elev. B	Dim. C	Dim. ±D	Dim. E	Dim. F	Dim. G
E. Abut. N. Wing	747.95	744.88	2'-5"	1'-6⅞"	8'-0"	10'-6"	3'-11"
E. Abut. S. Wing	748.01	744.88	2'-6"	1'-7½"	7'-11⅞"	10'-5⅛"	4'-0"
W. Abut. N. Wing	747.62	744.59	2'-5¼"	1'-6⅜"	7'-11⅛"	10'-5⅛"	3'-11¼"
W. Abut. S. Wing	747.60	744.59	2'-4⅛"	1'-6⅛"	8'-0"	10'-6"	3'-10⅛"

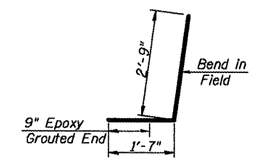

BAR h8(E)

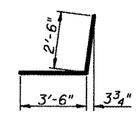

BAR h1(E)

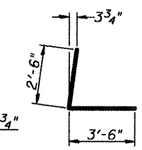

BAR h2(E)

BILL OF MATERIAL
(Both Abutments)

Bar	No.	Size	Length	Shape
h(E)	8	#6	40'-6"	
h1(E)	8	#5	6'-0"	
h2(E)	8	#5	6'-0"	
h3(E)	4	#4	10'-3"	
h4(E)	20	#4	10'-3"	
h5(E)	24	#5	10'-3"	
h6(E)	16	#5	7'-9"	
h7(E)	8	#5	7'-11"	
h8(E)	16	#5	4'-4"	
h9(E)	8	#5	4'-4"	
v(E)	82	#5	2'-2"	
v1(E)	82	#4	1'-0"	
v2(E)	32	#6	8'-1"	
v3(E)	32	#6	8'-1"	
v4(E)	24	#6	6'-0"	
Structure Excavation		Cu. Yd.	62	
Concrete Structures		Cu. Yd.	10.3	
Reinforcement Bars, Epoxy Coated		Pound	2540	
Concrete Sealer		Sq. Ft.	482	
Structural Repair of Concrete (Depth Equal To or Less Than 5 in.)		Sq. Ft.	3.0	

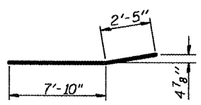

BAR h3(E)

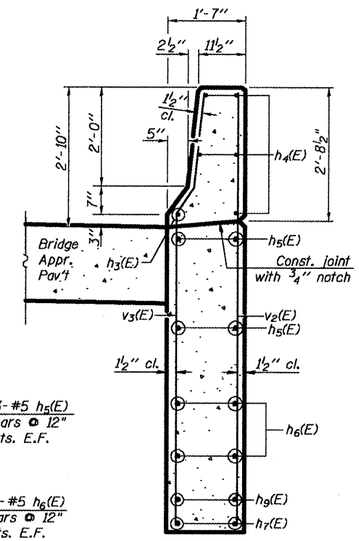

SECTION C-C

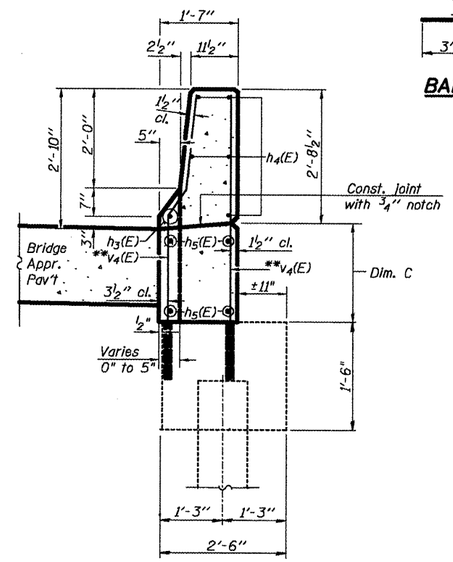

SECTION A-A
**Epoxy Grout v4(E) bars min. 9" deep in field drilled holes in accordance with Section 584 of the Standard Specifications.

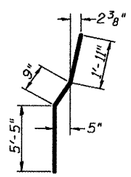

BAR v3(E)

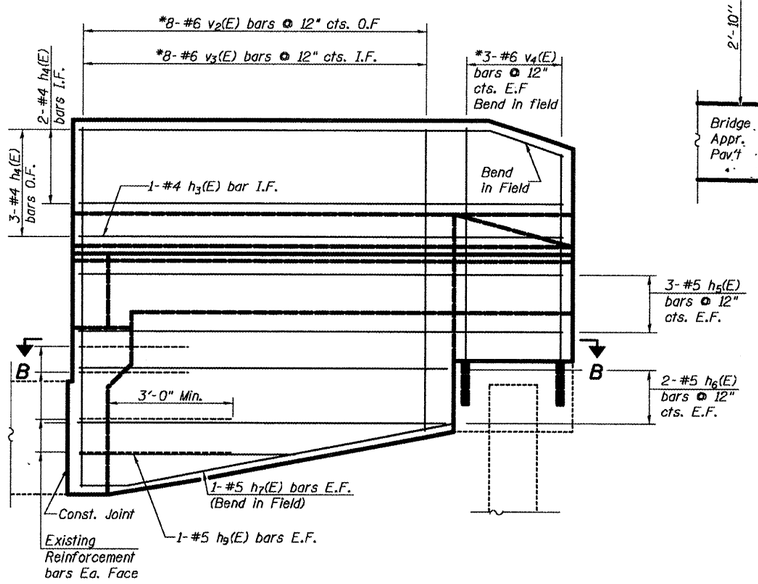

WINGWALL ELEVATION
(Showing Reinforcement)

* Cut to fit.

Notes:
Quantity of concrete in end post included with Concrete Superstructure on sheet 9 of 18.

Concrete Sealer shall be applied to the abutment seat, front face of backwall, and front exposed face of pile cap before pouring slab.

The concrete repair quantities shown are for estimating purposes only. The area to be repaired will be determined by the Engineer at the time of construction. Actual repair locations shall be shown on the as-built plans.

ABUTMENT DETAILS -1
(EAST ABUTMENT -NORTH STRUCTURE)
(WEST ABUTMENT -SOUTH STRUCTURE)
I-74 OVER TOWNSHIP ROAD 205
F.A.I. RTE. 74 - SEC. 48-(27HB-5)I,I-1
KNOX COUNTY
STATION 570+11.72
STRUCTURE NO. 048-0011 (WB), 0012 (EB)

LIN ENGINEERING, LTD.
Consulting Engineers
Chatham, Illinois

Designed By: ESH | Checked By: MTH | Drawn By: ESH
Date: 10/2008 | File: 048-0011,0012.dgn

SHEET NO. 15
18 SHEETS

F.A.I. RTE.	SECTION	COUNTY	TOTAL SHEETS	SHEET NO.
74	48-(27HB-5)I,I-1	KNOX	104	54
		CONTRACT NO. 68062		
FED. ROAD DIST. NO.	ILLINOIS	FED. AID PROJECT		

D-94-048-00

STATE OF ILLINOIS
DEPARTMENT OF TRANSPORTATION

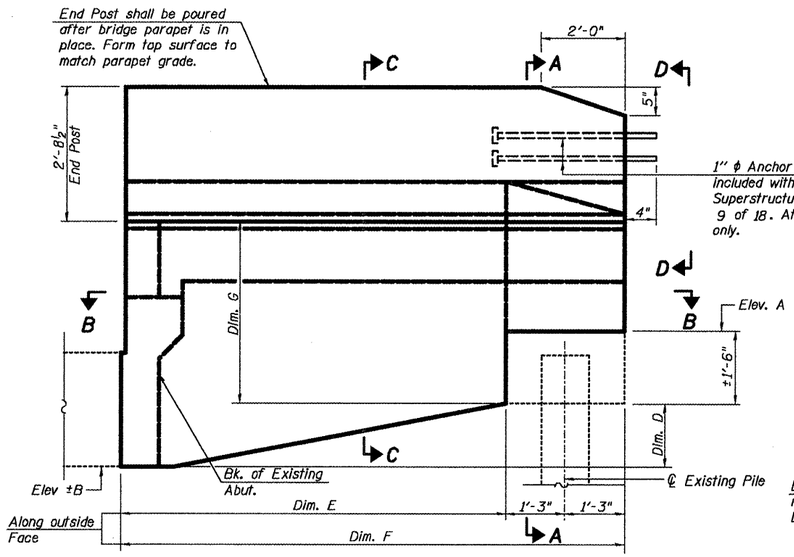

WINGWALL ELEVATION
(Showing Dimensions)

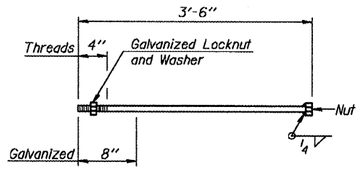

1" ϕ ANCHOR BOLT

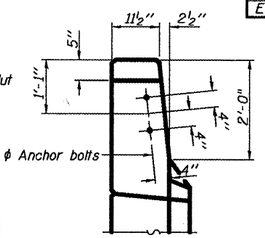

VIEW D-D

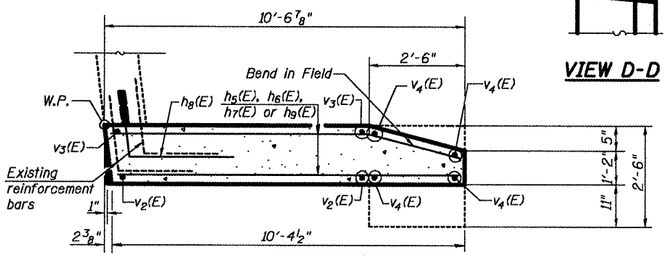

SECTION B-B
Nouth Wingwall of West Abutment shown
South Wingwall of East Abutment shown

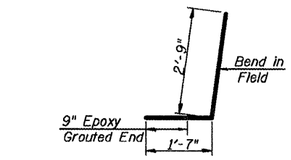

BAR h8(E)

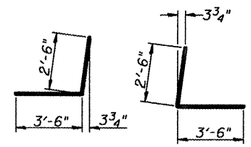

BAR h1(E)

BAR h2(E)

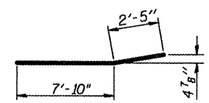

BAR h3(E)

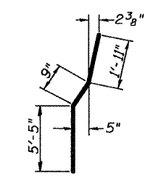

BAR v3(E)

ELEVATION & DIMENSION TABLE

Location	Elev. A	Elev. B	Dim. C	Dim. ±D	Dim. E	Dim. F	Dim. G
W. Abut. N. Wing	747.53	744.54	2'-4½"	1'-5⅞"	7'-11⅞"	10'-5⅞"	3'-10½"
W. Abut. S. Wing	747.59	744.54	2'-5⅜"	1'-6⅝"	8'-0"	10'-6"	3'-11⅜"
E. Abut. N. Wing	748.06	745.95	2'-5⅝"	1'-7⅜"	8'-0"	10'-6"	3'-11⅝"
E. Abut. S. Wing	748.04	745.95	2'-4⅝"	1'-7⅛"	7'-11⅞"	10'-5⅞"	3'-10⅝"

BILL OF MATERIAL
(Both Abutments)

Bar	No.	Size	Length	Shape
h(E)	8	#6	40'-6"	
h1(E)	8	#5	6'-0"	
h2(E)	8	#5	6'-0"	
h3(E)	4	#4	10'-3"	
h4(E)	20	#4	10'-3"	
h5(E)	24	#5	10'-3"	
h6(E)	16	#5	7'-9"	
h7(E)	8	#5	7'-11"	
h8(E)	16	#5	4'-4"	
h9(E)	8	#5	4'-4"	
v(E)	82	#5	2'-2"	
v1(E)	82	#4	1'-0"	
v2(E)	32	#6	8'-1"	
v3(E)	32	#6	8'-1"	
v4(E)	24	#6	6'-0"	
Structure Excavation			Cu. Yd.	62
Concrete Structures			Cu. Yd.	10.3
Reinforcement Bars, Epoxy Coated			Pound	2540
Concrete Sealer			Sq. Ft.	482
Structural Repair of Concrete (Depth Equal To or Less Than 5 in.)			Sq. Ft.	3.2

Concrete Sealer shall be applied to the abutment seat, front face of backwall, and front exposed face of pile cap before pouring slab.

The concrete repair quantities shown are for estimating purposes only. The area to be repaired will be determined by the Engineer at the time of construction. Actual repair locations shall be shown on the as-built plans.

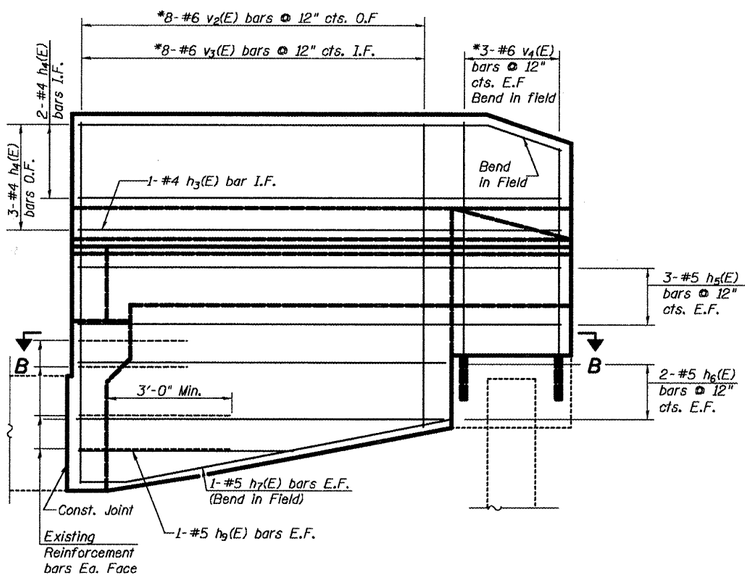

WINGWALL ELEVATION
(Showing Reinforcement)

* Cut to fit.

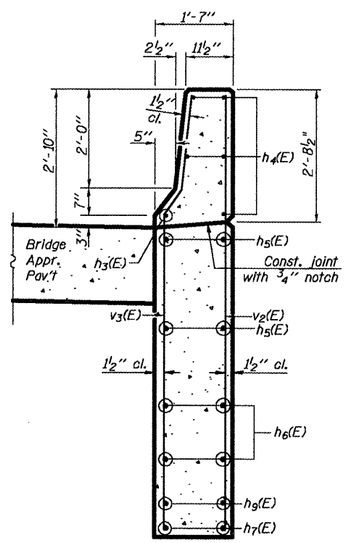

SECTION C-C

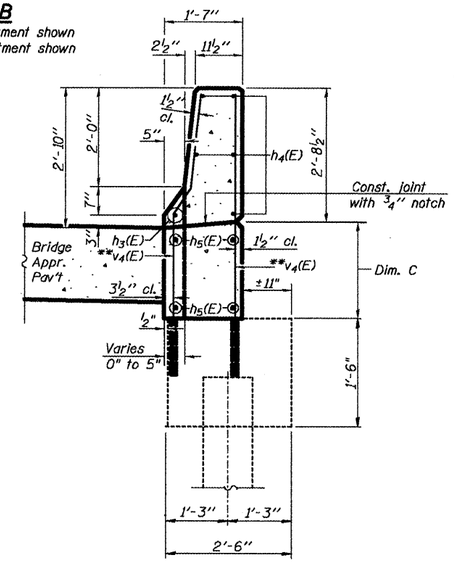

SECTION A-A

**Epoxy Grout v4(E) bars min. 9" deep in field drilled holes in accordance with Section 584 of the Standard Specifications.

Notes:
Quantity of concrete in end post Included with Concrete Superstructure on sheet 9 of 18.

ABUTMENT DETAILS -2
(WEST ABUTMENT -NORTH STRUCTURE)
(EAST ABUTMENT -SOUTH STRUCTURE)
I-74 OVER TOWNSHIP ROAD 205
F.A.I. RTE. 74 - SEC. 48-(27HB-5)I,I-1
KNOX COUNTY
STATION 570+11.72
STRUCTURE NO. 048-0011 (WB), 0012 (EB)

LIN ENGINEERING, LTD.
Consulting Engineers
Chatham, Illinois

Designed By: ESH | Checked By: MTH | Drawn By: ESH
Date: 10/2008 | File: 048-0011,0012.dgn

SHEET NO. 16
18 SHEETS

F.A.I. RTE.	SECTION	COUNTY	TOTAL SHEETS	SHEET NO.
74	48-(27HB-5)I,I-1	KNOX	104	55
		CONTRACT NO. 68062		
FED. ROAD DIST. NO.	ILLINOIS	FED. AID PROJECT		

D-94-048-00

STATE OF ILLINOIS
DEPARTMENT OF TRANSPORTATION

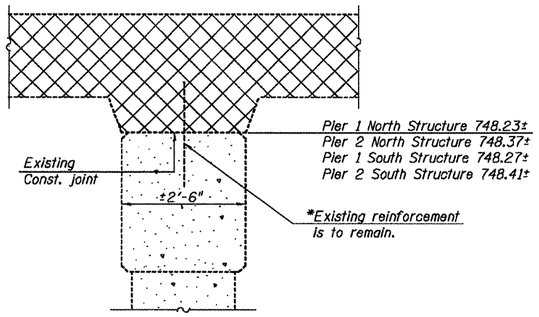

SECTION THRU PIER

(Horizontal dimensions @ Rt. L's)

* Existing reinforcement shall be cleaned and incorporated into the new construction. Cost included with Concrete Removal.

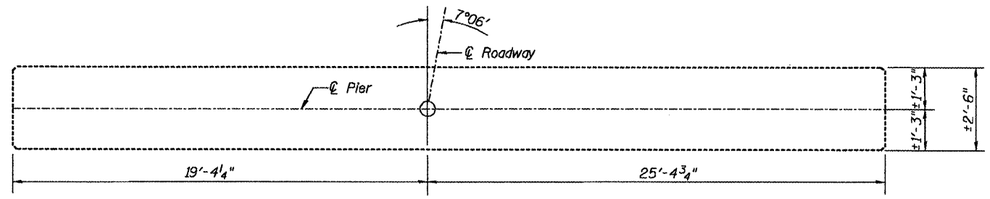

TOP PLAN

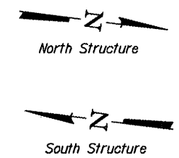

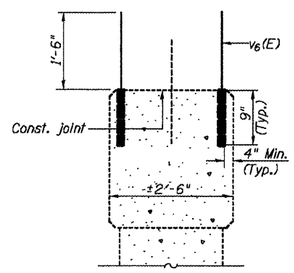

SECTION THRU PIER

(Horizontal dimensions @ Rt. L's)

Epoxy grout V6(E) bars in 9" deep field drilled holes in accordance with Section 584 of the Standard Specifications.

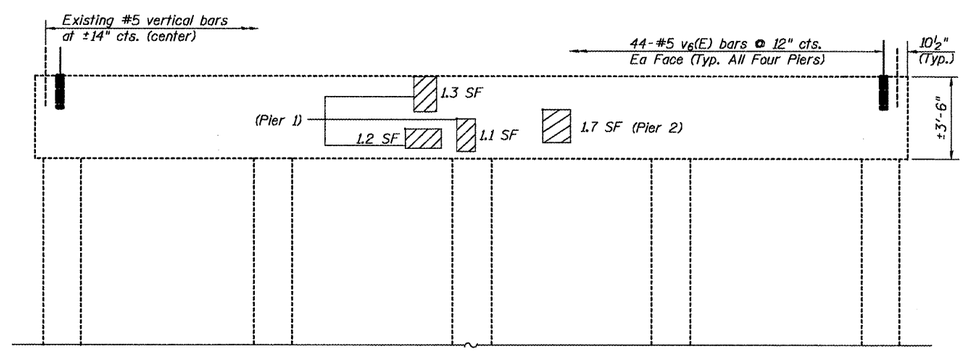

ELEVATION

N. Structure, Pier 1
S. Structure, Pier 2
(Looking West)

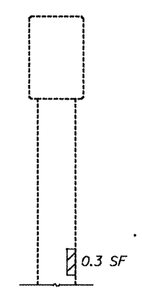

SOUTH END VIEW

N. Structure, Pier 1
(Looking North)

BILL OF MATERIAL

(Four Piers)

Bar	No.	Size	Length	Shape
V6(E)	352	#5	2'-3"	——
Reinforcement Bars, Epoxy Coated			Pound	830
Structural Repair of Concrete (Depth Equal To or Less Than 5 in.)			Sq. Ft.	5.6

The quantities shown are for estimating purposes only. The area to be repaired will be determined by the Engineer at the time of construction. Actual repair locations shall be shown on the as-built plans.

LEGEND

Indicates Removal of Existing Superstructures.

Indicates Structural Repair of Concrete (Depth Equal to or Less Than 5")

SF Square Feet

PIERS 1 & 2
(NORTH & SOUTH STRUCTURES)
I-74 OVER TOWNSHIP ROAD 205
F.A.I. RTE. 74 - SEC. 48-(27HB-5)I,I-1
KNOX COUNTY
STATION 570+11.72
STRUCTURE NO. 048-0011 (WB), 0012 (EB)

LIN ENGINEERING, LTD.
Consulting Engineers
Chatham, Illinois

Designed By: ESH | Checked By: MTH | Drawn By: ESH
Date: 10/2008 | File: 048-0011,0012.dgn

SHEET NO. 17
18 SHEETS

F.A.I. RTE.	SECTION	COUNTY	TOTAL SHEETS	SHEET NO.
74	48-(27HB-5)I,I-1	KNOX	104	56
		CONTRACT NO. 68062		
FED. ROAD DIST. NO.	ILLINOIS	FED. AID PROJECT		

D-94-048-00

STATE OF ILLINOIS
DEPARTMENT OF TRANSPORTATION

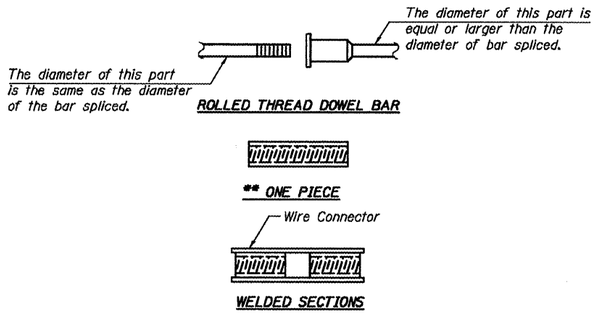

BAR SPLICER ASSEMBLY ALTERNATIVES

**Heavy Hex Nuts conforming to ASTM A 563, Grade C, D or DH may be used.

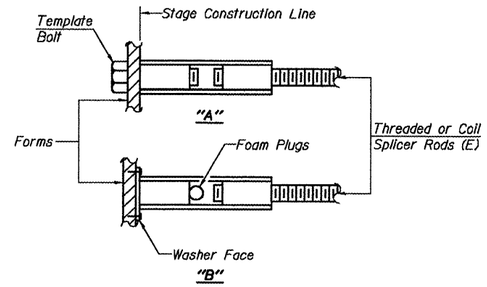

INSTALLATION AND SETTING METHODS

"A" :Set bar splicer assembly by means of a template bolt.
"B" :Set bar splicer assembly by nailing to wood forms or cementing to steel forms.
(E) : Indicates epoxy coating.

NOTES

Bar splicer assemblies shall be of an approved type and shall develop in tension at least 125 percent of the yield strength of the lapped reinforcement bars.

Splicer rods shall be of minimum 60 ksi yield strength, threaded or coiled full length.

All reinforcement bars shall be lapped and tied to the splicer rods or dowel bars.

Bar splicer assemblies shall be epoxy coated according to the requirements for reinforcement bars.

Other systems of similar design may be submitted to the Engineer for approval. Approval shall be based on certified test results from an approved testing laboratory that the proposed bar splicer assembly satisfies the following requirements:

① Minimum Capacity (Tension in kips) = $1.25 \times fy \times A_t$

② Minimum *Pull-out Strength (Tension in kips) = $0.66 \times fy \times A_t$

Where fy = Yield strength of lapped reinforcement bars in ksi.
A_t = Tensile stress area of lapped reinforcement bars.
* = 28 day concrete

BAR SPLICER ASSEMBLIES			
Bar Size to be Spliced	Splicer Rod or Dowel Bar Length	Strength Requirements	
		Min. Capacity kips - tension	Min. Pull-Out Strength kips - tension
#4	1'-8"	14.7	7.9
#5	2'-0"	23.0	12.3
#6	2'-7"	33.1	17.4
#7	3'-5"	45.1	23.8
#8	4'-6"	58.9	31.3
#9	5'-9"	75.0	39.6
#10	7'-3"	95.0	50.3
#11	9'-0"	117.4	61.8

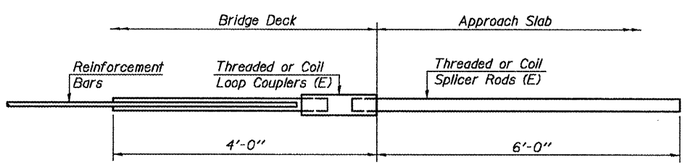

FOR INTEGRAL OR SEMI-INTEGRAL ABUTMENTS

Bar Splicer for #5 bar
Min. Capacity = 23.0 kips - tension
Min. Pull-out Strength = 12.3 kips - tension
No. Required =

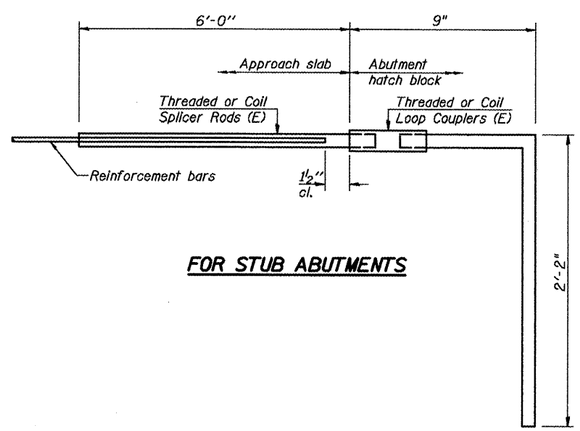

FOR STUB ABUTMENTS

Bar Splicer for #5 bar
Min. Capacity = 23.0 kips - tension
Min. Pull-out Strength = 12.3 kips - tension
No. Required = 164

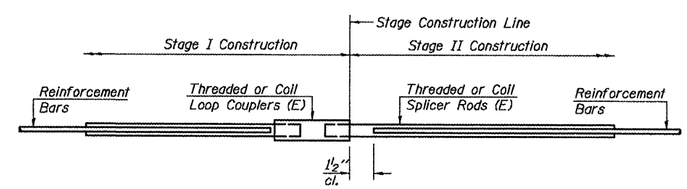

STANDARD

Bar Size	No. Assemblies Required	Location

BAR SPLICER ASSEMBLY DETAILS
I-74 OVER TOWNSHIP ROAD 205
F.A.I. RTE. 74 - SEC. 48-(27HB-5)I,I-1
KNOX COUNTY
STATION 570+11.72
STRUCTURE NO. 048-0011 (WB), 0012 (EB)

LIN ENGINEERING, LTD.
Consulting Engineers
Chatham, Illinois

Designed By: ESH | Checked By: MTH | Drawn By: ESH
Date: 10/2008 | File: 048-0011_0012.dgn

SHEET NO. 18
18 SHEETS

F.A.I. RTE.	SECTION	COUNTY	TOTAL SHEETS	SHEET NO.
74	48-(27HB-5)I,I-1	KNOX	104	57
		CONTRACT NO. 68062		
FED. ROAD DIST. NO.	ILLINOIS	FED. AID PROJECT		

BSD-1 5-16-08

D-94-048-00

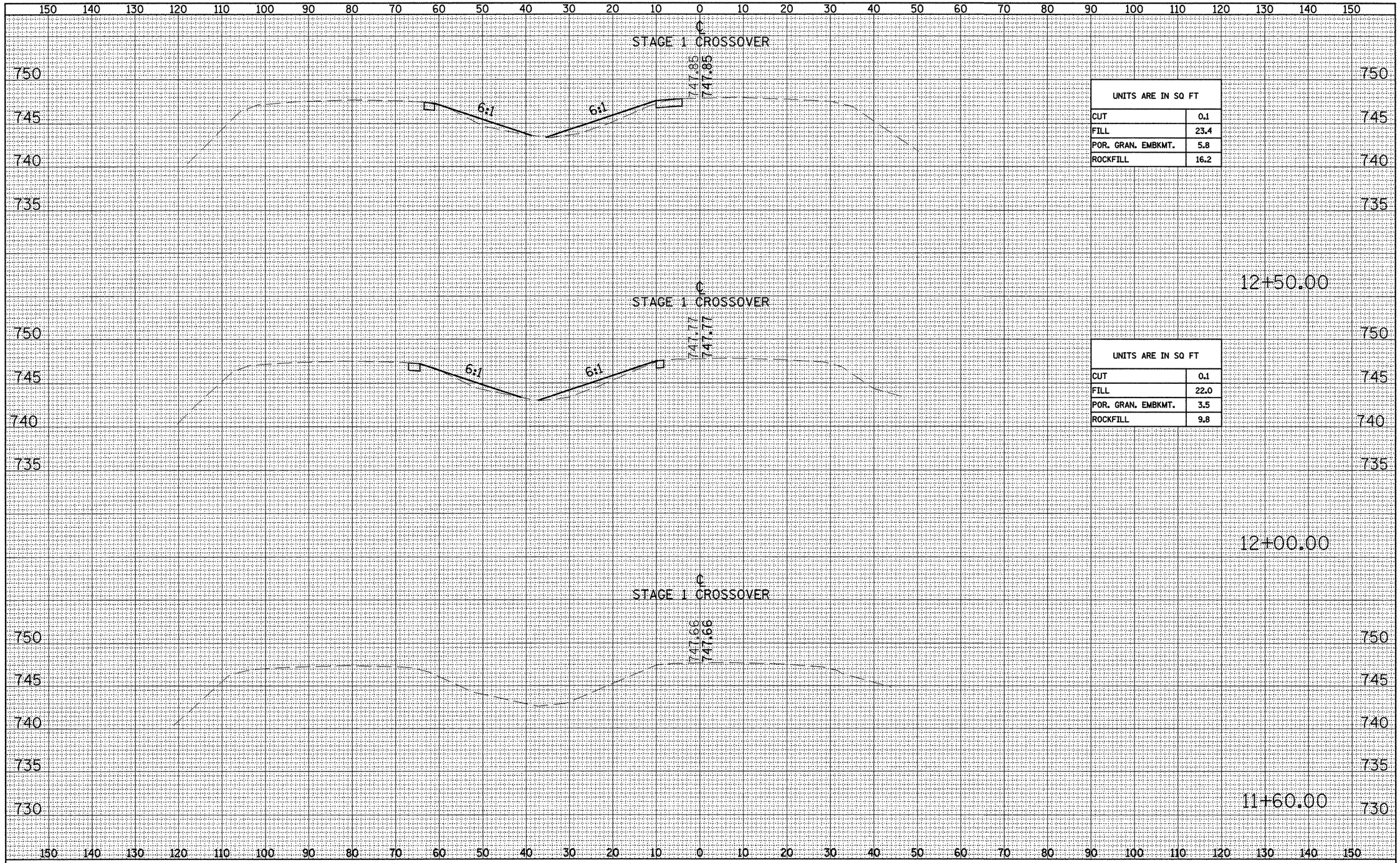

UNITS ARE IN SQ FT	
CUT	0.1
FILL	23.4
POR. GRAN. EMBKMT.	5.8
ROCKFILL	16.2

UNITS ARE IN SQ FT	
CUT	0.1
FILL	22.0
POR. GRAN. EMBKMT.	3.5
ROCKFILL	9.8

FINAL SURVEY		BY	DATE
NOTE BOOK	SURVEYED		
	PLOTTED		
	TEMPLATE		
	AREAS		
NO.	AREAS CHECKED		

ORIGINAL SURVEY		BY	DATE
NOTE BOOK	SURVEYED		
	PLOTTED		
	TEMPLATE		
	AREAS		
NO.	AREAS CHECKED		

FILE NAME = X-Sections for Temp X-over 12-13-08.dgn	USER NAME = taraja	DESIGNED - OWR	REVISED - N/A
		DRAWN - OWR	REVISED - N/A
	PLOT SCALE = 20.00 ' / IN.	CHECKED - FML	REVISED - N/A
	PLOT DATE = 12/13/2008	DATE - 11/2008	REVISED - N/A

STATE OF ILLINOIS
DEPARTMENT OF TRANSPORTATION

MAINTENANCE OF TRAFFIC RUNAROUND STAGE 1 CROSS SECTIONS
I-74 OVER TOWNSHIP ROAD 205

SCALE:1"=10'H & 5'V | SHEET NO. -- OF -- SHEETS | STA. 00+00.00 TO STA. 00+00.00

F.A.I. RTE.	SECTION	COUNTY	TOTAL SHEETS	SHEET NO.
74	48(27RS-3)2 (27HB-5)I. I-1	KNOX	104	58
		CONTRACT NO. 68062		
FED. ROAD DIST. NO.	ILLINOIS	FED. AID PROJECT		

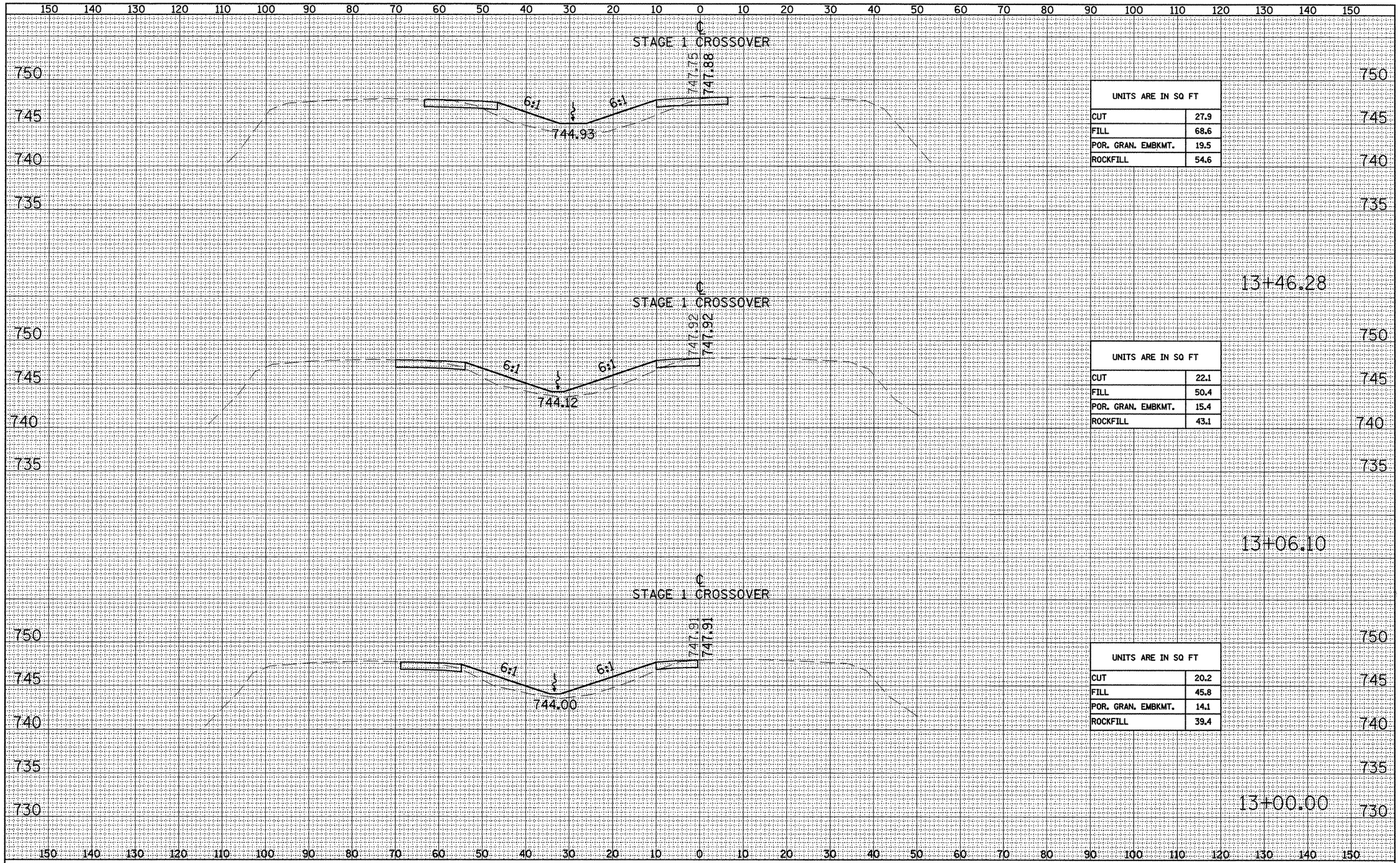

UNITS ARE IN SQ FT	
CUT	27.9
FILL	68.6
POR. GRAN. EMBKMT.	19.5
ROCKFILL	54.6

UNITS ARE IN SQ FT	
CUT	22.1
FILL	50.4
POR. GRAN. EMBKMT.	15.4
ROCKFILL	43.1

UNITS ARE IN SQ FT	
CUT	20.2
FILL	45.8
POR. GRAN. EMBKMT.	14.1
ROCKFILL	39.4

FINAL SURVEY	BY	DATE
SURVEYED		
PLOTTED		
TEMPLATE		
AREAS		
AREAS CHECKED		
NOTE BOOK		
NO.		

ORIGINAL SURVEY	BY	DATE
SURVEYED		
PLOTTED		
TEMPLATE		
AREAS		
AREAS CHECKED		
NOTE BOOK		
NO.		

FILE NAME = X-Sections for Temp X-over 12-13-08.dgn	USER NAME = toroja	DESIGNED - OWR	REVISED - N/A
		DRAWN - OWR	REVISED - N/A
	PLOT SCALE = 20.00 ' / IN.	CHECKED - FML	REVISED - N/A
	PLOT DATE = 12/13/2008	DATE - 11/2008	REVISED - N/A

STATE OF ILLINOIS
DEPARTMENT OF TRANSPORTATION

MAINTENANCE OF TRAFFIC RUNAROUND STAGE 1 CROSS SECTIONS
I-74 OVER TOWNSHIP ROAD 205

SCALE:1"=10'H & 5'V | SHEET NO. -- OF -- SHEETS | STA. 00+00.00 TO STA. 00+00.00

F.A.I. RTE.	SECTION	COUNTY	TOTAL SHEETS	SHEET NO.
74	48(27RS-3)½ (27HB-5)I. I-1	KNOX	104	59

CONTRACT NO. 68062

FED. ROAD DIST. NO. | ILLINOIS | FED. AID PROJECT

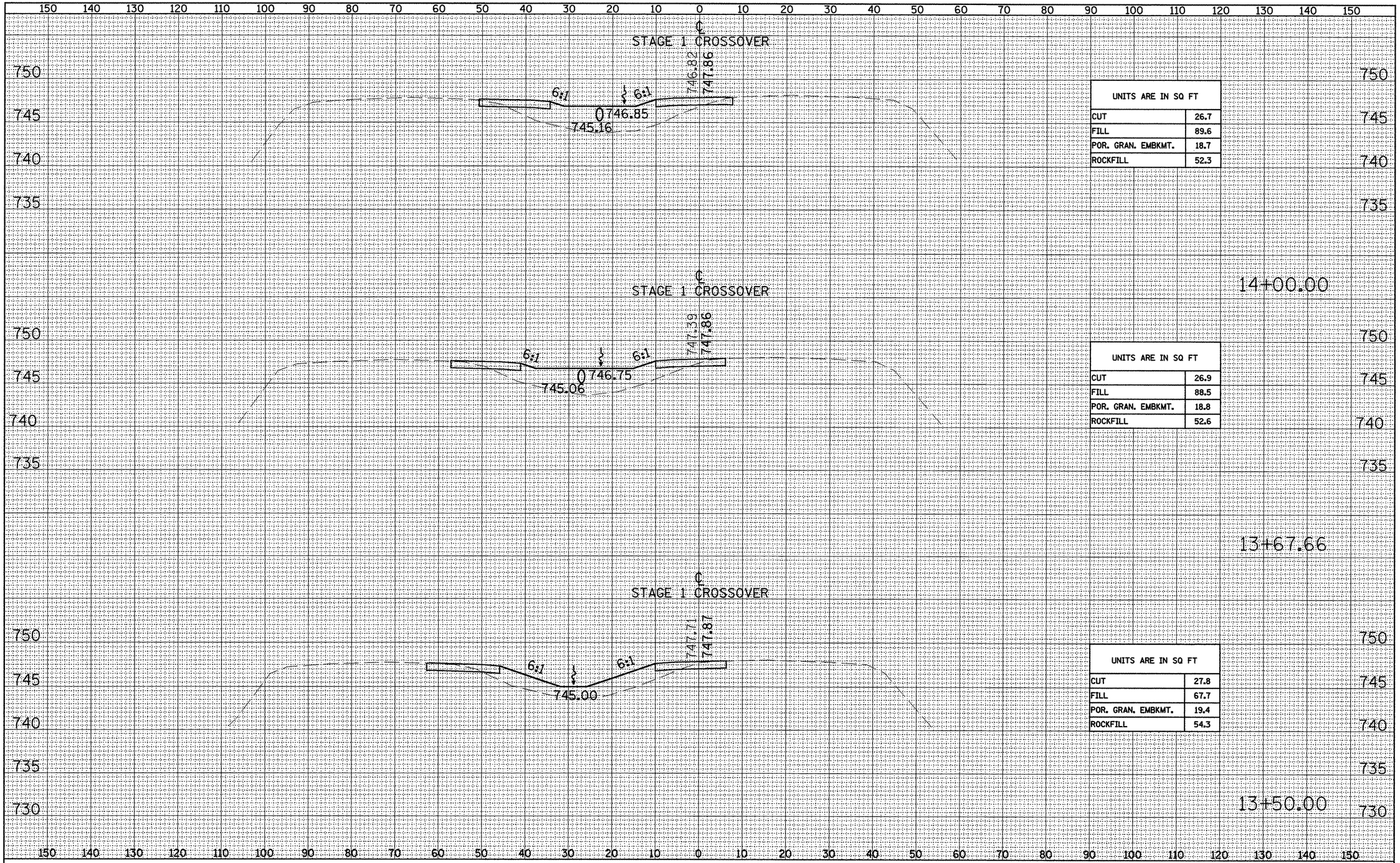

UNITS ARE IN SQ FT	
CUT	26.7
FILL	89.6
POR. GRAN. EMBKMT.	18.7
ROCKFILL	52.3

UNITS ARE IN SQ FT	
CUT	26.9
FILL	88.5
POR. GRAN. EMBKMT.	18.8
ROCKFILL	52.6

UNITS ARE IN SQ FT	
CUT	27.8
FILL	67.7
POR. GRAN. EMBKMT.	19.4
ROCKFILL	54.3

FINAL SURVEY	BY:	DATE
SURVEYED		
PLOTTED		
TEMPLATE		
AREAS		
AREAS CHECKED		
NOTE BOOK		
NO.		

ORIGINAL SURVEY	BY	DATE
SURVEYED		
PLOTTED		
TEMPLATE		
AREAS		
AREAS CHECKED		
NOTE BOOK		
NO.		

FILE NAME =
X-Sections for Temp X-over 12-13-08.dgn

USER NAME = toroja	DESIGNED - OWR	REVISED - N/A	
	DRAWN - OWR	REVISED - N/A	
PLOT SCALE = 20.00 ' / IN.	CHECKED - FML	REVISED - N/A	
PLOT DATE = 12/13/2008	DATE - 11/2008	REVISED - N/A	

STATE OF ILLINOIS
DEPARTMENT OF TRANSPORTATION

MAINTENANCE OF TRAFFIC RUNAROUND STAGE 1 CROSS SECTIONS
I-74 OVER TOWNSHIP ROAD 205

SCALE:1"=10'H & 5'V | SHEET NO. -- OF -- SHEETS | STA. 00+00.00 TO STA. 00+00.00

F.A.I. RTE.	SECTION	COUNTY	TOTAL SHEETS	SHEET NO.
74	48(27RS-3); (27HB-5)I. I-1	KNOX	104	60
		CONTRACT NO. 68062		
FED. ROAD DIST. NO.	ILLINOIS	FED. AID PROJECT		

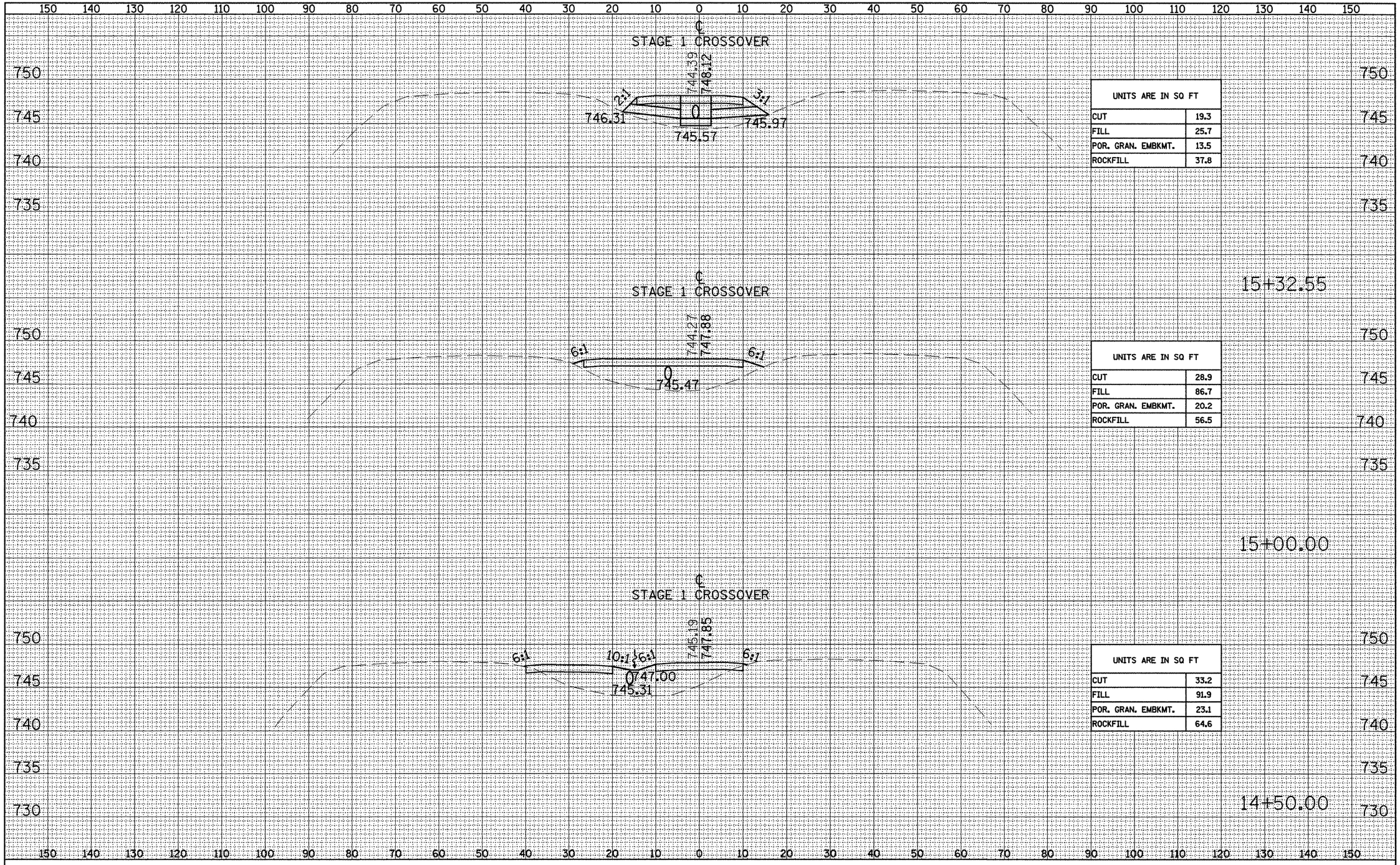

UNITS ARE IN SQ FT	
CUT	19.3
FILL	25.7
POR. GRAN. EMBKMT.	13.5
ROCKFILL	37.8

UNITS ARE IN SQ FT	
CUT	28.9
FILL	86.7
POR. GRAN. EMBKMT.	20.2
ROCKFILL	56.5

UNITS ARE IN SQ FT	
CUT	33.2
FILL	91.9
POR. GRAN. EMBKMT.	23.1
ROCKFILL	64.6

FINAL SURVEY	BY	DATE
SURVEYED		
PLOTTED		
TEMPLATE		
AREAS		
AREAS CHECKED		
NOTE BOOK		
NO.		

ORIGINAL SURVEY	BY	DATE
SURVEYED		
PLOTTED		
TEMPLATE		
AREAS		
AREAS CHECKED		
NOTE BOOK		
NO.		

FILE NAME = X-Sections for Temp X-over 12-13-08.dgn	USER NAME = toroja	DESIGNED - OWR	REVISED - N/A
		DRAWN - OWR	REVISED - N/A
	PLOT SCALE = 20.00 ' / IN.	CHECKED - FML	REVISED - N/A
	PLOT DATE = 12/13/2008	DATE - 11/2008	REVISED - N/A

STATE OF ILLINOIS
DEPARTMENT OF TRANSPORTATION

MAINTENANCE OF TRAFFIC RUNAROUND STAGE 1 CROSS SECTIONS
I-74 OVER TOWNSHIP ROAD 205

SCALE:1"=10'H & 5'V | SHEET NO. -- OF -- SHEETS | STA. 00+00.00 TO STA. 00+00.00

F.A.I. RTE.	SECTION	COUNTY	TOTAL SHEETS	SHEET NO.
74	48(27RS-3); (27HB-5)1. I-1	KNOX	104	61
		CONTRACT NO. 68062		
FED. ROAD DIST. NO.	ILLINOIS	FED. AID PROJECT		

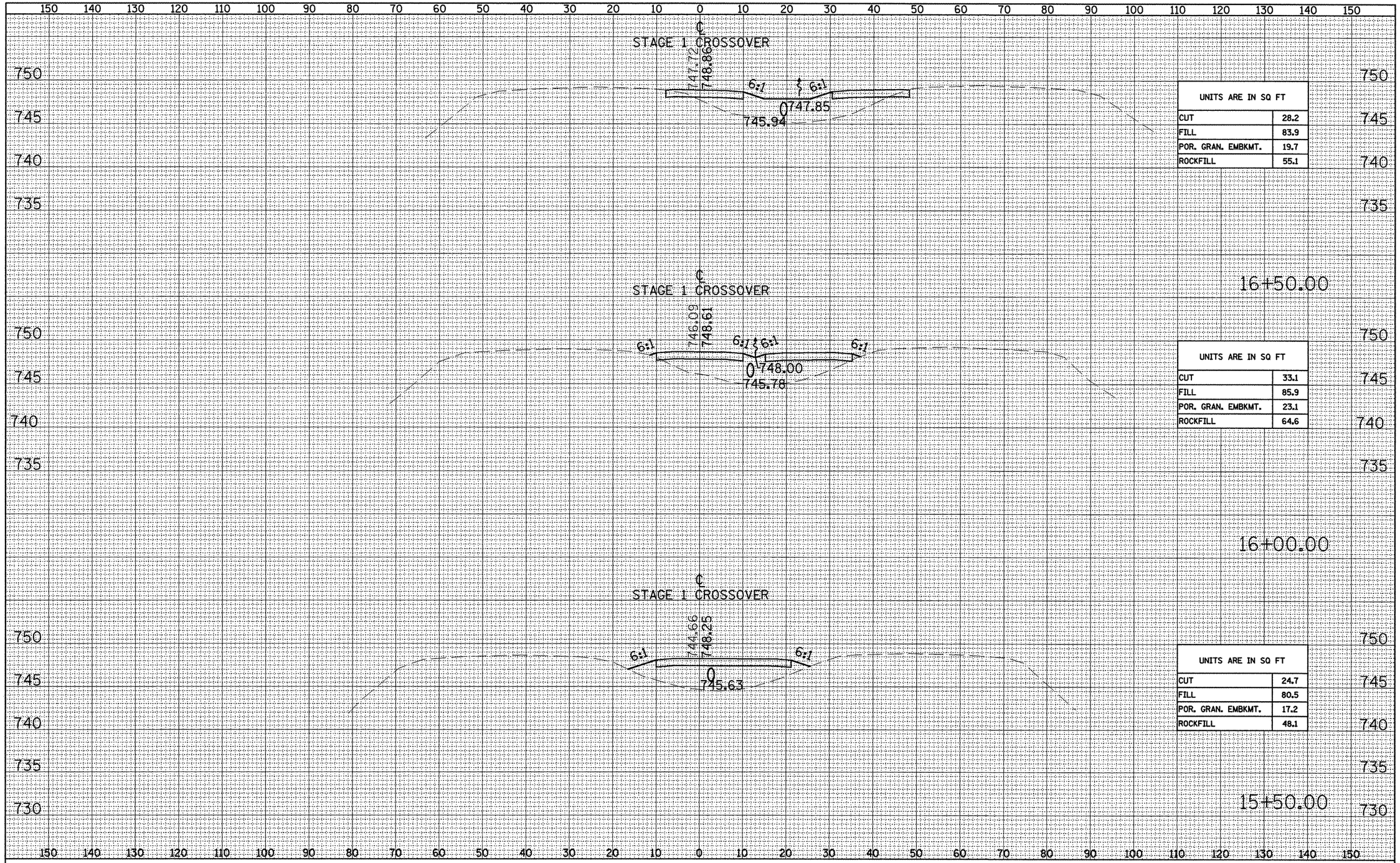

UNITS ARE IN SQ FT	
CUT	28.2
FILL	83.9
POR. GRAN. EMBKMT.	19.7
ROCKFILL	55.1

UNITS ARE IN SQ FT	
CUT	33.1
FILL	85.9
POR. GRAN. EMBKMT.	23.1
ROCKFILL	64.6

UNITS ARE IN SQ FT	
CUT	24.7
FILL	80.5
POR. GRAN. EMBKMT.	17.2
ROCKFILL	48.1

FINAL SURVEY	BY	DATE
SURVEYED		
PLOTTED		
HORIZ./VERT.		
NOTE BOOK AREAS		
AREAS CHECKED		
NO.		

ORIGINAL SURVEY	BY	DATE
SURVEYED		
PLOTTED		
HORIZ./VERT.		
NOTE BOOK AREAS		
AREAS CHECKED		
NO.		

FILE NAME = X-Sections for Temp X-over 12-13-08.dgn	USER NAME = toroja	DESIGNED - OWR	REVISED - N/A
		DRAWN - OWR	REVISED - N/A
	PLOT SCALE = 20.00 ' / IN.	CHECKED - FML	REVISED - N/A
	PLOT DATE = 12/13/2008	DATE - 11/2008	REVISED - N/A

STATE OF ILLINOIS
DEPARTMENT OF TRANSPORTATION

MAINTENANCE OF TRAFFIC RUNAROUND STAGE 1 CROSS SECTIONS
I-74 OVER TOWNSHIP ROAD 205

SCALE:1"=10'H & 5'V | SHEET NO. -- OF -- SHEETS | STA. 00+00.00 TO STA. 00+00.00

F.A.I. RTE.	SECTION	COUNTY	TOTAL SHEETS	SHEET NO.
74	48(27RS-3)ﾟ (27HB-5)I. I-1	KNOX	104	62
		CONTRACT NO. 68062		
FED. ROAD DIST. NO.	ILLINOIS	FED. AID PROJECT		

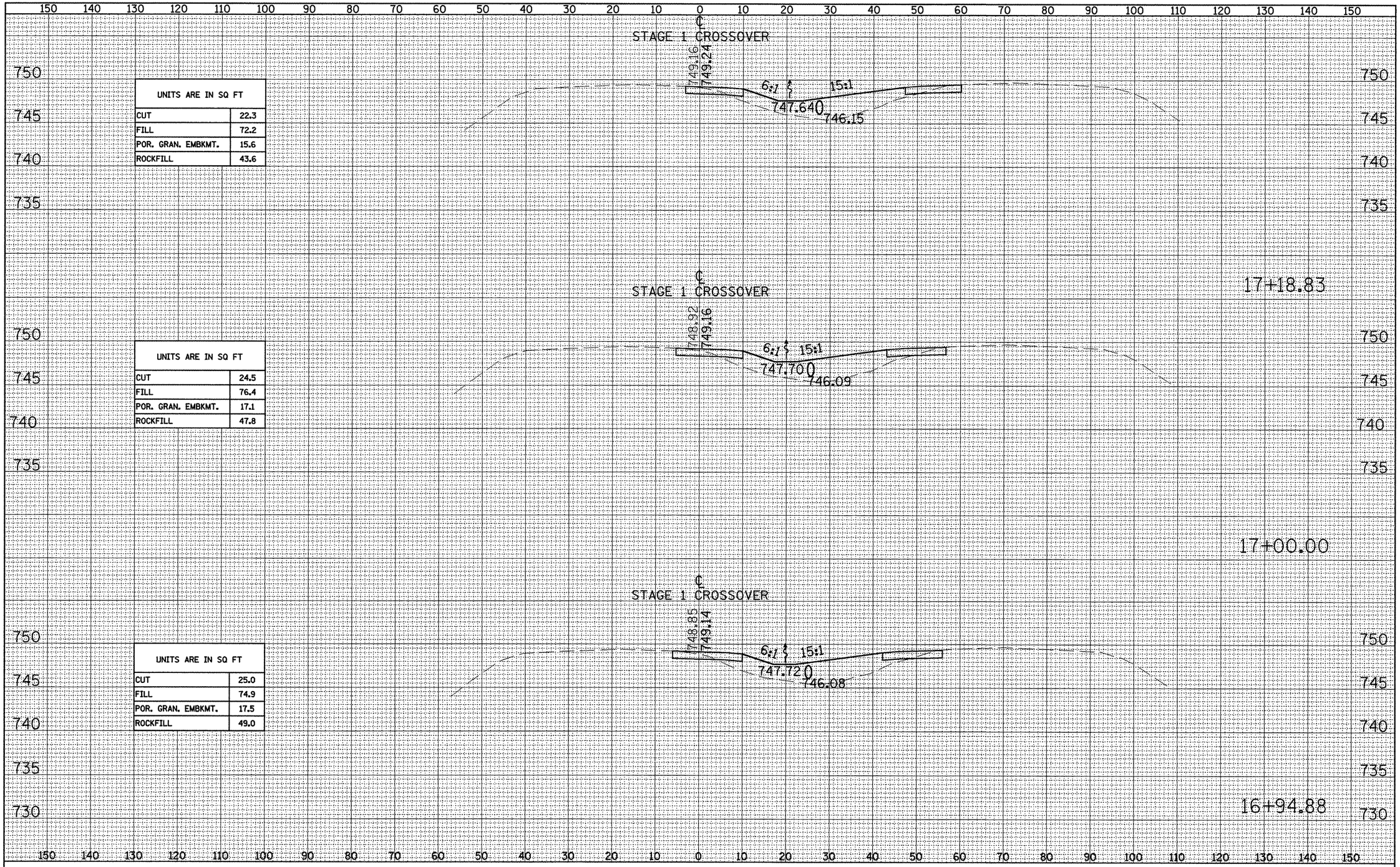

UNITS ARE IN SQ FT	
CUT	22.3
FILL	72.2
POR. GRAN. EMBKMT.	15.6
ROCKFILL	43.6

UNITS ARE IN SQ FT	
CUT	24.5
FILL	76.4
POR. GRAN. EMBKMT.	17.1
ROCKFILL	47.8

UNITS ARE IN SQ FT	
CUT	25.0
FILL	74.9
POR. GRAN. EMBKMT.	17.5
ROCKFILL	49.0

FINAL SURVEY	BY	DATE
SURVEYED		
PLOTTED		
TEMPLATE		
AREAS		
AREAS CHECKED		
NOTE BOOK NO.		

ORIGINAL SURVEY	BY	DATE
SURVEYED		
PLOTTED		
TEMPLATE		
AREAS		
AREAS CHECKED		
NOTE BOOK NO.		

FILE NAME = X-Sections for Temp X-over 12-13-08.dgn	USER NAME = toroja	DESIGNED - OWR	REVISED - N/A
		DRAWN - OWR	REVISED - N/A
	PLOT SCALE = 20.00 ' / IN.	CHECKED - FML	REVISED - N/A
	PLOT DATE = 12/13/2008	DATE - 11/2008	REVISED - N/A

STATE OF ILLINOIS
DEPARTMENT OF TRANSPORTATION

MAINTENANCE OF TRAFFIC RUNAROUND STAGE 1 CROSS SECTIONS
I-74 OVER TOWNSHIP ROAD 205

SCALE:1"=10'H & 5'V | SHEET NO. -- OF -- SHEETS | STA. 00+00.00 TO STA. 00+00.00

F.A.I. RTE.	SECTION	COUNTY	TOTAL SHEETS	SHEET NO.
74	48(2TRS-3)₃ (2THB-5)I. I-1	KNOX	104	63
		CONTRACT NO. 68062		
FED. ROAD DIST. NO.	ILLINOIS	FED. AID PROJECT		

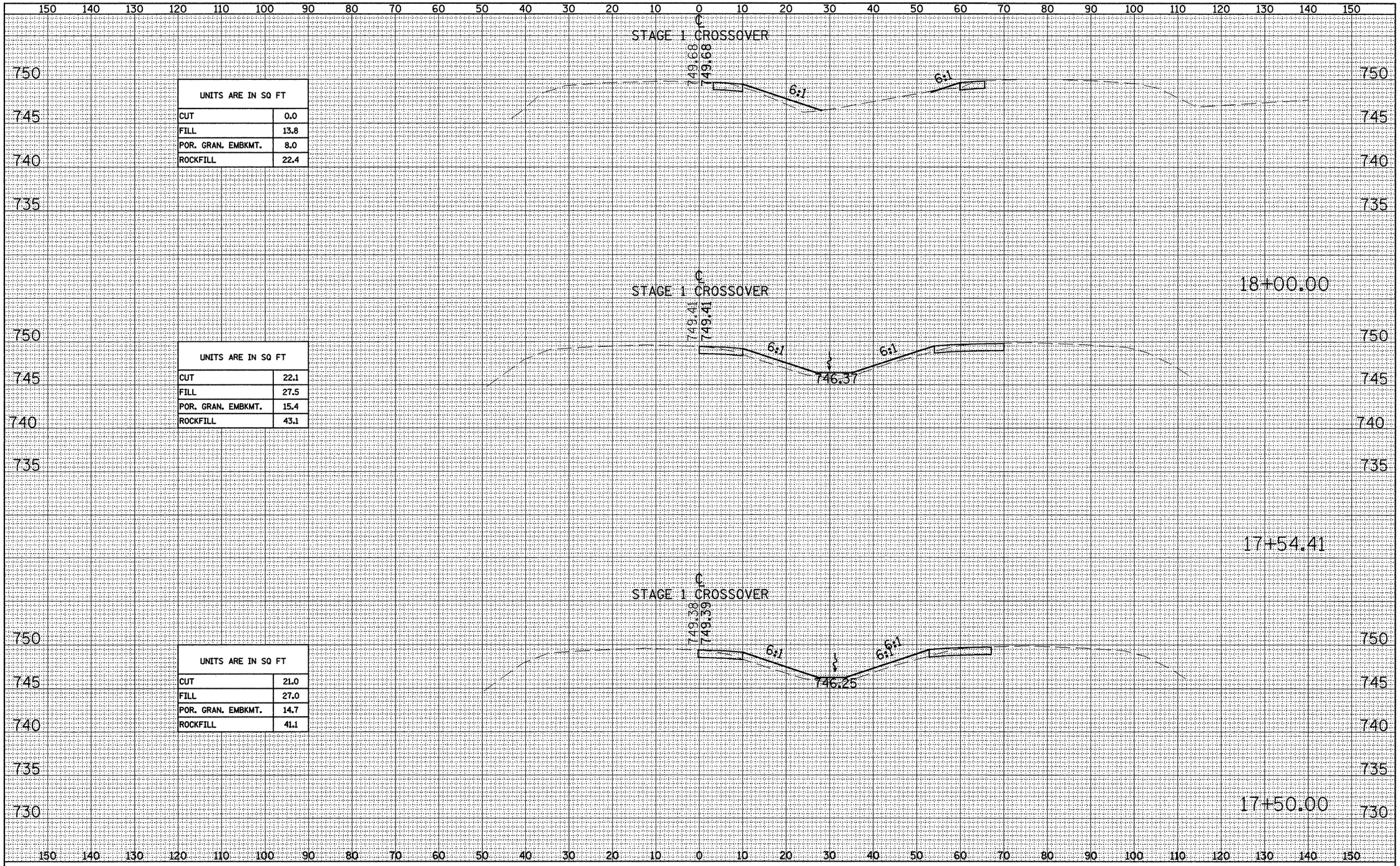

UNITS ARE IN SQ FT	
CUT	0.0
FILL	13.8
POR. GRAN. EMBKMT.	8.0
ROCKFILL	22.4

UNITS ARE IN SQ FT	
CUT	22.1
FILL	27.5
POR. GRAN. EMBKMT.	15.4
ROCKFILL	43.1

UNITS ARE IN SQ FT	
CUT	21.0
FILL	27.0
POR. GRAN. EMBKMT.	14.7
ROCKFILL	41.1

FINAL SURVEY	BY	DATE
SURVEYED		
PLOTTED		
TEMPLATE		
AREAS		
AREAS CHECKED		
NOTE BOOK NO.		

ORIGINAL SURVEY	BY	DATE
SURVEYED		
PLOTTED		
TEMPLATE		
AREAS		
AREAS CHECKED		
NOTE BOOK NO.		

FILE NAME =
X-Sections for Temp X-over 12-13-08.dgn

USER NAME = toroja	DESIGNED - OWR	REVISED - N/A	
	DRAWN - OWR	REVISED - N/A	
PLOT SCALE = 20.00 ' / IN.	CHECKED - FML	REVISED - N/A	
PLOT DATE = 12/13/2008	DATE - 11/2008	REVISED - N/A	

STATE OF ILLINOIS
DEPARTMENT OF TRANSPORTATION

MAINTENANCE OF TRAFFIC RUNAROUND STAGE 1 CROSS SECTIONS
I-74 OVER TOWNSHIP ROAD 205

SCALE:1"=10'H & 5'V | SHEET NO. -- OF -- SHEETS | STA. 00+00.00 TO STA. 00+00.00

F.A.I. RTE.	SECTION	COUNTY	TOTAL SHEETS	SHEET NO.
74	48(27RS-3); (27HB-5)1, I-1	KNOX	104	64

CONTRACT NO. 68062

FED. ROAD DIST. NO. | ILLINOIS | FED. AID PROJECT

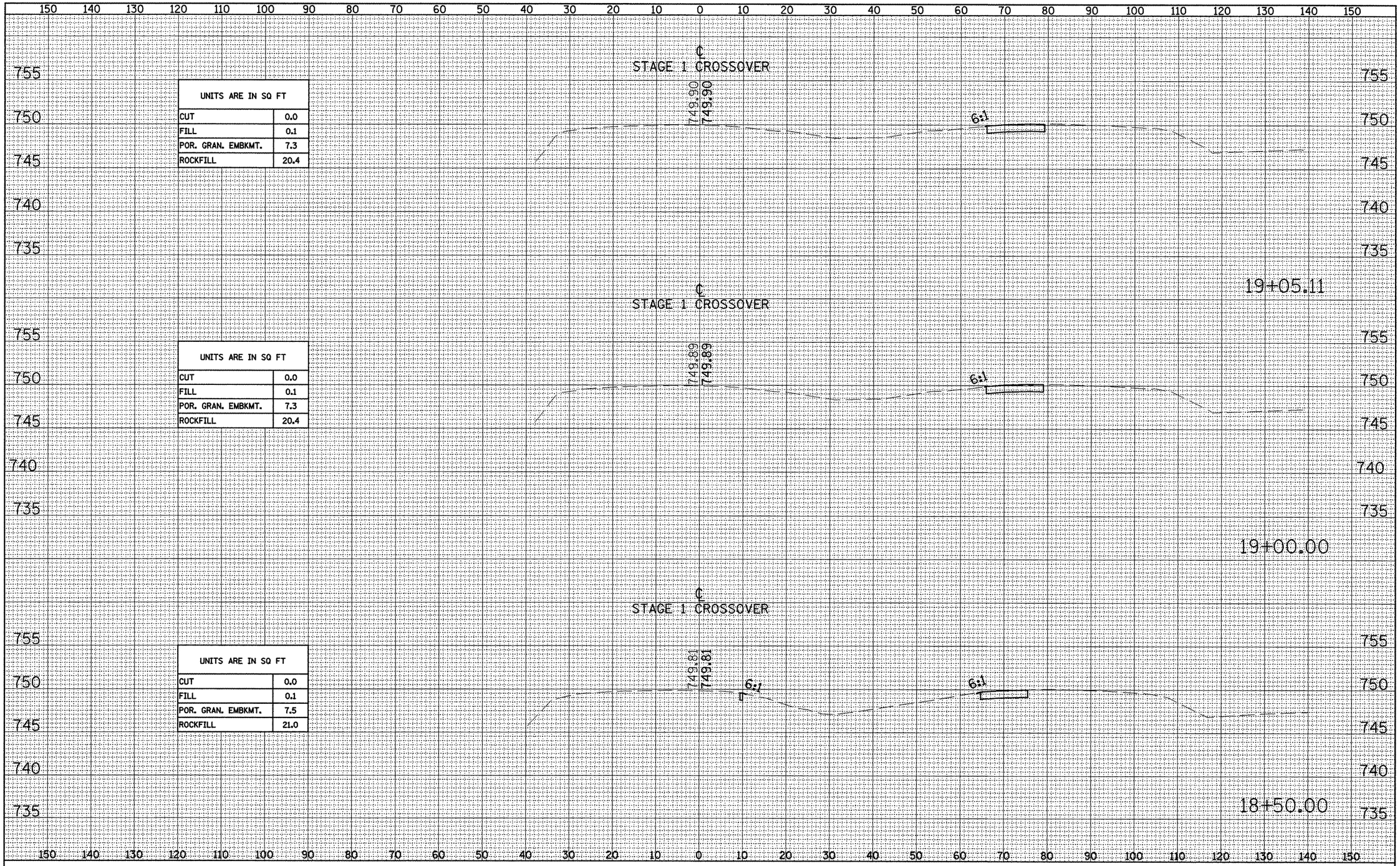

UNITS ARE IN SQ FT	
CUT	0.0
FILL	0.1
POR. GRAN. EMBKMT.	7.3
ROCKFILL	20.4

UNITS ARE IN SQ FT	
CUT	0.0
FILL	0.1
POR. GRAN. EMBKMT.	7.3
ROCKFILL	20.4

UNITS ARE IN SQ FT	
CUT	0.0
FILL	0.1
POR. GRAN. EMBKMT.	7.5
ROCKFILL	21.0

FINAL SURVEY		BY	DATE
NOTE BOOK	SURVEYED		
	PLOTTED		
	TEMPLATE		
	AREAS		
NO.	AREAS CHECKED		

ORIGINAL SURVEY		BY	DATE
NOTE BOOK	SURVEYED		
	PLOTTED		
	TEMPLATE		
NO.	AREAS CHECKED		

FILE NAME = X-Sections for Temp X-over 12-13-08.dgn	USER NAME = taroja	DESIGNED - OWR	REVISED - N/A
		DRAWN - OWR	REVISED - N/A
	PLOT SCALE = 20.00 ' / IN.	CHECKED - FML	REVISED - N/A
	PLOT DATE = 12/13/2008	DATE - 11/2008	REVISED - N/A

STATE OF ILLINOIS
DEPARTMENT OF TRANSPORTATION

MAINTENANCE OF TRAFFIC RUNAROUND STAGE 1 CROSS SECTIONS
I-74 OVER TOWNSHIP ROAD 205

SCALE:1"=10'H & 5'V | SHEET NO. -- OF -- SHEETS | STA. 00+00.00 TO STA. 00+00.00

F.A.I. RTE.	SECTION	COUNTY	TOTAL SHEETS	SHEET NO.
74	48(27RS-3); (27HB-5)I. I-1	KNOX	104	65

CONTRACT NO. 68062

FED. ROAD DIST. NO. | ILLINOIS | FED. AID PROJECT

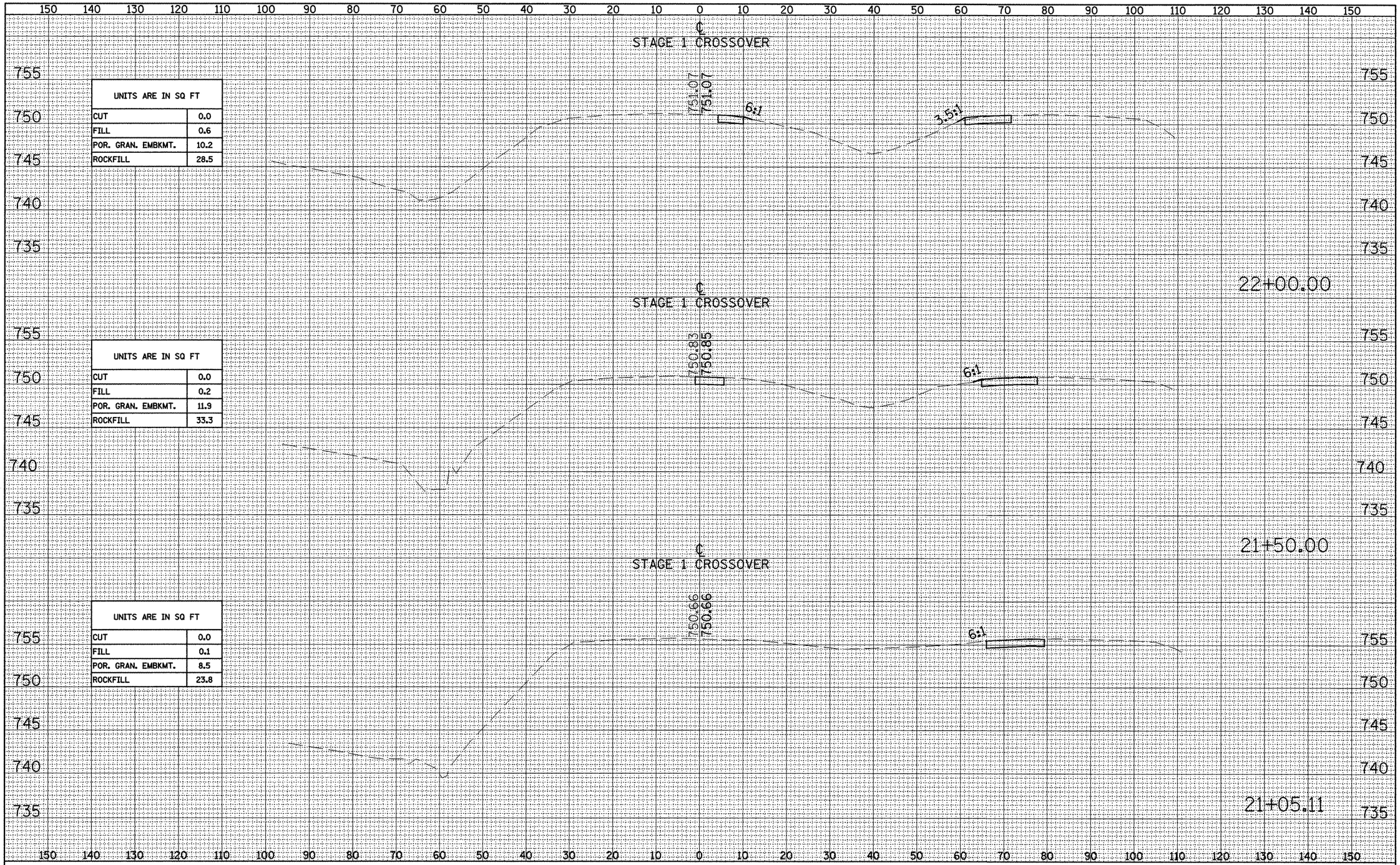

UNITS ARE IN SQ FT	
CUT	0.0
FILL	0.6
POR. GRAN. EMBKMT.	10.2
ROCKFILL	28.5

UNITS ARE IN SQ FT	
CUT	0.0
FILL	0.2
POR. GRAN. EMBKMT.	11.9
ROCKFILL	33.3

UNITS ARE IN SQ FT	
CUT	0.0
FILL	0.1
POR. GRAN. EMBKMT.	8.5
ROCKFILL	23.8

FINAL SURVEY	BY	DATE
NOTE BOOK	SURVEYED	
NO.	PLOTTED	
	TEMPLATE	
	AREAS	
	AREAS CHECKED	

ORIGINAL SURVEY	BY	DATE
NOTE BOOK	SURVEYED	
NO.	PLOTTED	
	TEMPLATE	
	AREAS	
	AREAS CHECKED	

FILE NAME = X-Sections for Temp X-over 12-13-08.dgn	USER NAME = toroja	DESIGNED - OWR	REVISED - N/A
		DRAWN - OWR	REVISED - N/A
	PLOT SCALE = 20.00 ' / IN.	CHECKED - FML	REVISED - N/A
	PLOT DATE = 12/13/2008	DATE - 11/2008	REVISED - N/A

STATE OF ILLINOIS
DEPARTMENT OF TRANSPORTATION

MAINTENANCE OF TRAFFIC RUNAROUND STAGE 1 CROSS SECTIONS
I-74 OVER TOWNSHIP ROAD 205

SCALE=1"=10'H & 5'V | SHEET NO. -- OF -- SHEETS | STA. 00+00.00 TO STA. 00+00.00

F.A.I. RTE.	SECTION	COUNTY	TOTAL SHEETS	SHEET NO.
74	48(27RS-3); (27HB-5)I. I-1	KNOX	104	66

CONTRACT NO. 68062

FED. ROAD DIST. NO. | ILLINOIS | FED. AID PROJECT

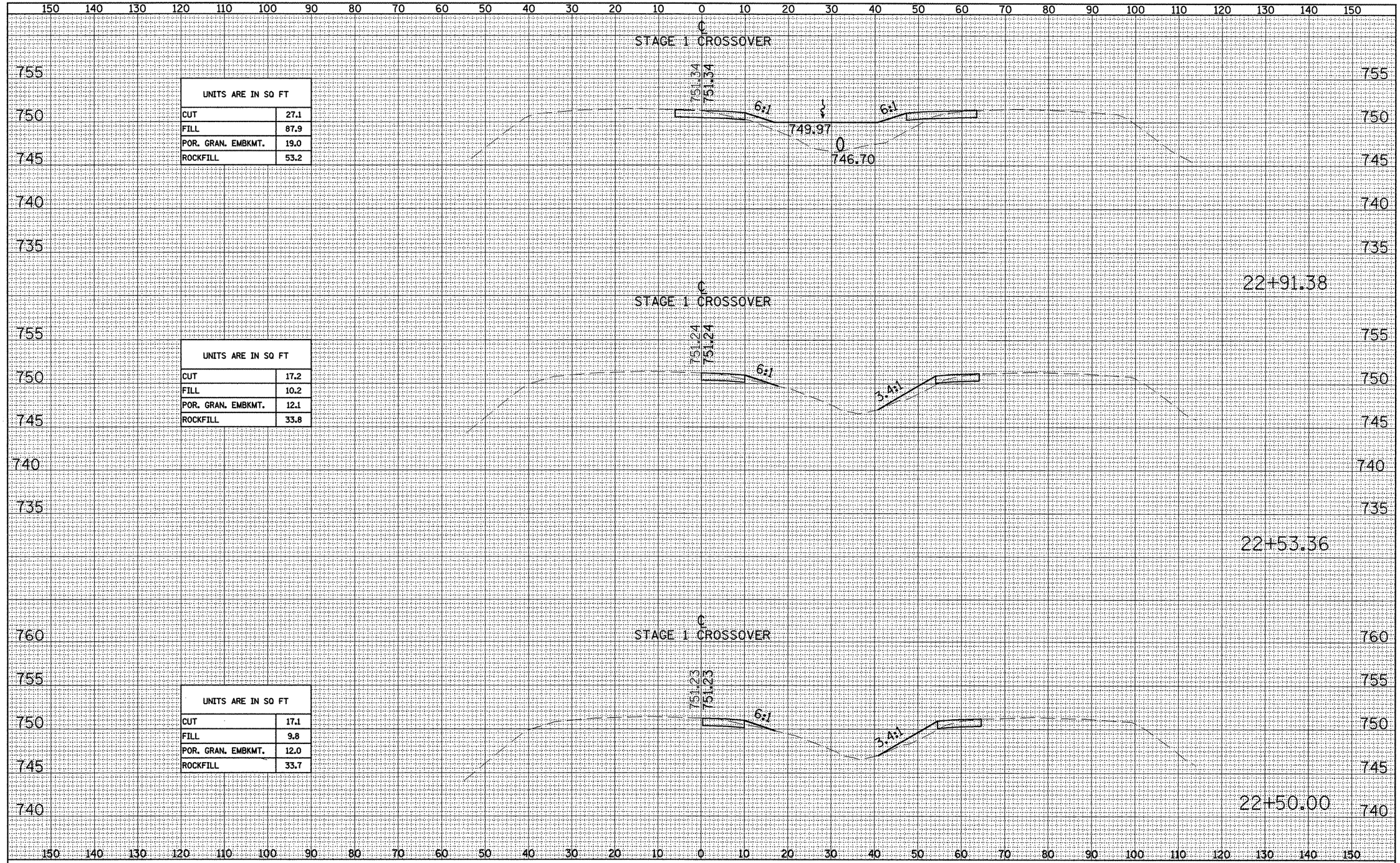

UNITS ARE IN SQ FT	
CUT	27.1
FILL	87.9
POR. GRAN. EMBKMT.	19.0
ROCKFILL	53.2

UNITS ARE IN SQ FT	
CUT	17.2
FILL	10.2
POR. GRAN. EMBKMT.	12.1
ROCKFILL	33.8

UNITS ARE IN SQ FT	
CUT	17.1
FILL	9.8
POR. GRAN. EMBKMT.	12.0
ROCKFILL	33.7

FINAL SURVEY	BY	DATE
SURVEYED		
PLOTTED		
TEMPLATE		
AREAS		
AREAS CHECKED		
NOTE BOOK NO.		

ORIGINAL SURVEY	BY	DATE
SURVEYED		
PLOTTED		
TEMPLATE		
AREAS		
AREAS CHECKED		
NOTE BOOK NO.		

FILE NAME = X-Sections for Temp X-over 12-13-08.dgn	USER NAME = taroja	DESIGNED - OWR	REVISED - N/A
		DRAWN - OWR	REVISED - N/A
	PLOT SCALE = 20.00 ' / IN.	CHECKED - FML	REVISED - N/A
	PLOT DATE = 12/13/2008	DATE - 11/2008	REVISED - N/A

STATE OF ILLINOIS
DEPARTMENT OF TRANSPORTATION

MAINTENANCE OF TRAFFIC RUNAROUND STAGE 1 CROSS SECTIONS
I-74 OVER TOWNSHIP ROAD 205

SCALE: 1"=10'H & 5'V | SHEET NO. -- OF -- SHEETS | STA. 00+00.00 TO STA. 00+00.00

F.A.I. RTE.	SECTION	COUNTY	TOTAL SHEETS	SHEET NO.
74	48(27RS-3); (27HB-5)I. I-1	KNOX	104	67

CONTRACT NO. 68062

FED. ROAD DIST. NO. | ILLINOIS | FED. AID PROJECT

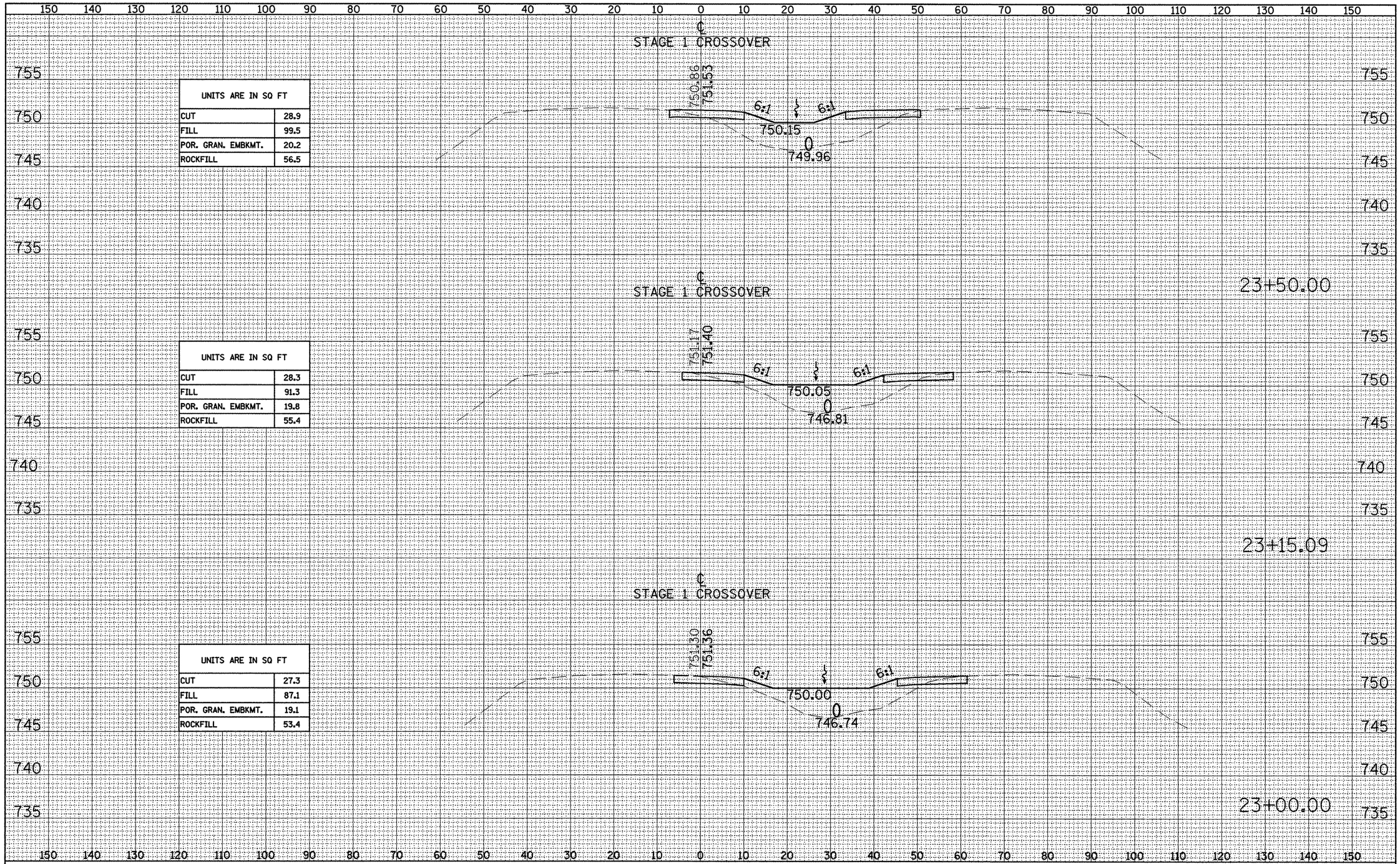

UNITS ARE IN SQ FT	
CUT	28.9
FILL	99.5
POR. GRAN. EMBKMT.	20.2
ROCKFILL	56.5

UNITS ARE IN SQ FT	
CUT	28.3
FILL	91.3
POR. GRAN. EMBKMT.	19.8
ROCKFILL	55.4

UNITS ARE IN SQ FT	
CUT	27.3
FILL	87.1
POR. GRAN. EMBKMT.	19.1
ROCKFILL	53.4

FINAL SURVEY	BY	DATE
SURVEYED		
PLOTTED		
TEMPLATE		
AREAS		
AREAS CHECKED		
NOTE BOOK NO.		

ORIGINAL SURVEY	BY	DATE
SURVEYED		
PLOTTED		
TEMPLATE		
AREAS		
AREAS CHECKED		
NOTE BOOK NO.		

FILE NAME = X-Sections for Temp X-over 12-13-08.dgn	USER NAME = toroja	DESIGNED - OWR	REVISED - N/A
		DRAWN - OWR	REVISED - N/A
	PLOT SCALE = 20.00 ' / IN.	CHECKED - FML	REVISED - N/A
	PLOT DATE = 12/13/2008	DATE - 11/2008	REVISED - N/A

STATE OF ILLINOIS
DEPARTMENT OF TRANSPORTATION

MAINTENANCE OF TRAFFIC RUNAROUND STAGE 1 CROSS SECTIONS
I-74 OVER TOWNSHIP ROAD 205

SCALE:1"=10'H & 5'V | SHEET NO. -- OF -- SHEETS | STA. 00+00.00 TO STA. 00+00.00

F.A.I. RTE.	SECTION	COUNTY	TOTAL SHEETS	SHEET NO.
74	48(27RS-3)½ (27HB-5)I. I-1	KNOX	104	68

CONTRACT NO. 68062

FED. ROAD DIST. NO. | ILLINOIS | FED. AID PROJECT

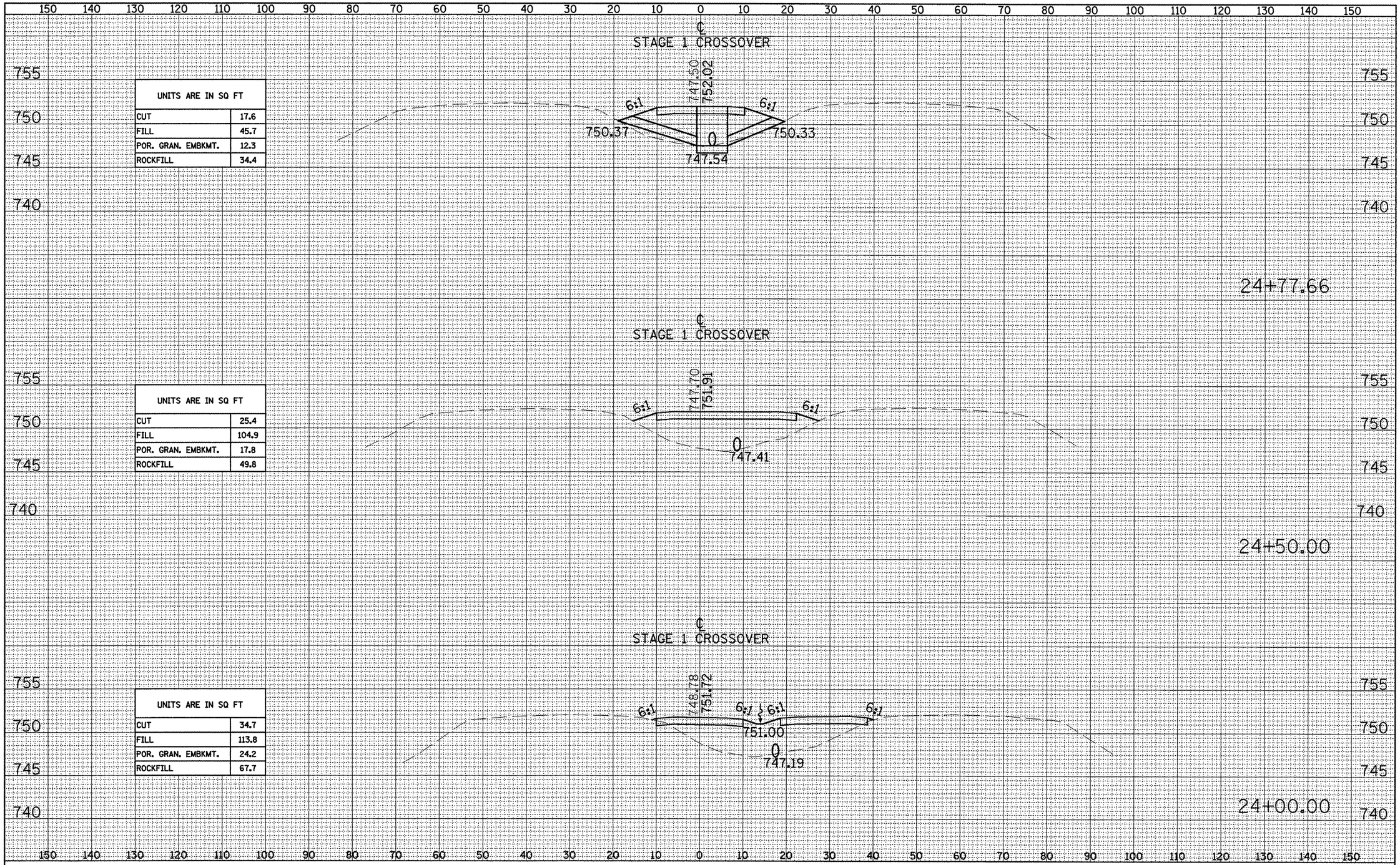

UNITS ARE IN SQ FT	
CUT	17.6
FILL	45.7
POR. GRAN. EMBKMT.	12.3
ROCKFILL	34.4

UNITS ARE IN SQ FT	
CUT	25.4
FILL	104.9
POR. GRAN. EMBKMT.	17.8
ROCKFILL	49.8

UNITS ARE IN SQ FT	
CUT	34.7
FILL	113.8
POR. GRAN. EMBKMT.	24.2
ROCKFILL	67.7

FINAL SURVEY	BY	DATE
SURVEYED		
PLOTTED		
TEMPLATE		
AREAS		
AREAS CHECKED		
NOTE BOOK NO.		

ORIGINAL SURVEY	BY	DATE
SURVEYED		
PLOTTED		
TEMPLATE		
AREAS		
AREAS CHECKED		
NOTE BOOK NO.		

FILE NAME = X-Sections for Temp X-over 12-13-08.dgn	USER NAME = toroja	DESIGNED - OWR	REVISED - N/A
		DRAWN - OWR	REVISED - N/A
	PLOT SCALE = 20.00 ' / IN.	CHECKED - FML	REVISED - N/A
	PLOT DATE = 12/13/2008	DATE - 11/2008	REVISED - N/A

STATE OF ILLINOIS
DEPARTMENT OF TRANSPORTATION

MAINTENANCE OF TRAFFIC RUNAROUND STAGE 1 CROSS SECTIONS
I-74 OVER TOWNSHIP ROAD 205

SCALE:1"=10'H & 5'V | SHEET NO. -- OF -- SHEETS | STA. 00+00.00 TO STA. 00+00.00

F.A.I. RTE.	SECTION	COUNTY	TOTAL SHEETS	SHEET NO.
74	48(27RS-3)₃ (27HB-5)I. I-1	KNOX	104	69

CONTRACT NO. 68062

FED. ROAD DIST. NO. | ILLINOIS | FED. AID PROJECT

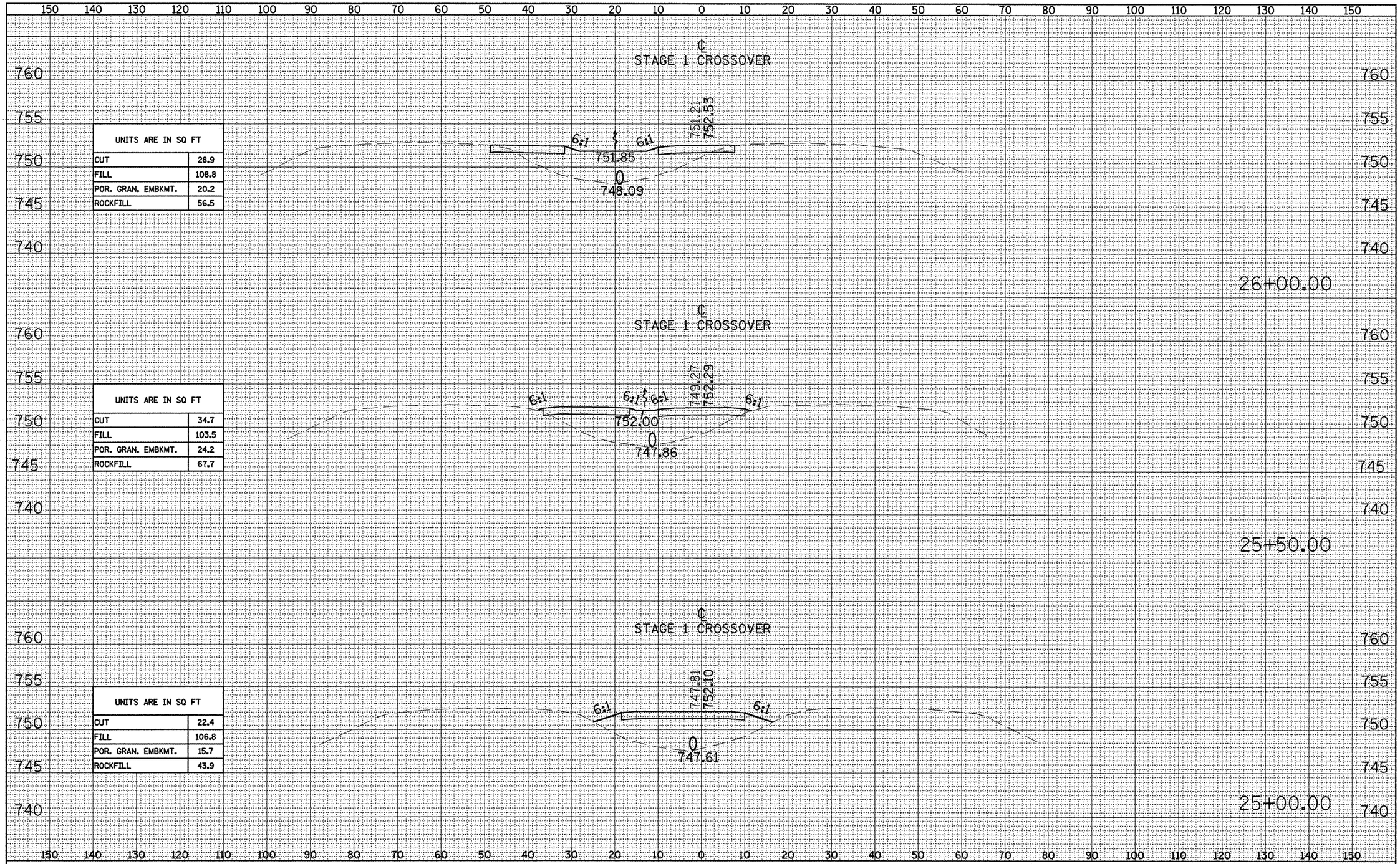

UNITS ARE IN SQ FT	
CUT	28.9
FILL	108.8
POR. GRAN. EMBKMT.	20.2
ROCKFILL	56.5

UNITS ARE IN SQ FT	
CUT	34.7
FILL	103.5
POR. GRAN. EMBKMT.	24.2
ROCKFILL	67.7

UNITS ARE IN SQ FT	
CUT	22.4
FILL	106.8
POR. GRAN. EMBKMT.	15.7
ROCKFILL	43.9

FINAL SURVEY — NOTE BOOK NO. — SURVEYED — PLOTTED — TEMPLATE — AREAS — AREAS CHECKED — BY — DATE

ORIGINAL SURVEY — NOTE BOOK NO. — SURVEYED — PLOTTED — TEMPLATE — AREAS — AREAS CHECKED — BY — DATE

FILE NAME = X-Sections for Temp X-over 12-13-08.dgn	USER NAME = toroja	DESIGNED - OWR	REVISED - N/A
		DRAWN - OWR	REVISED - N/A
	PLOT SCALE = 20.00 ' / IN.	CHECKED - FML	REVISED - N/A
	PLOT DATE = 12/13/2008	DATE - 11/2008	REVISED - N/A

STATE OF ILLINOIS
DEPARTMENT OF TRANSPORTATION

MAINTENANCE OF TRAFFIC RUNAROUND STAGE 1 CROSS SECTIONS
I-74 OVER TOWNSHIP ROAD 205

SCALE:1"=10'H & 5'V | SHEET NO. -- OF -- SHEETS | STA. 00+00.00 TO STA. 00+00.00

F.A.I. RTE.	SECTION	COUNTY	TOTAL SHEETS	SHEET NO.
74	48(27RS-3); (27HB-5)I. I-1	KNOX	104	70

CONTRACT NO. 68062

FED. ROAD DIST. NO. | ILLINOIS | FED. AID PROJECT

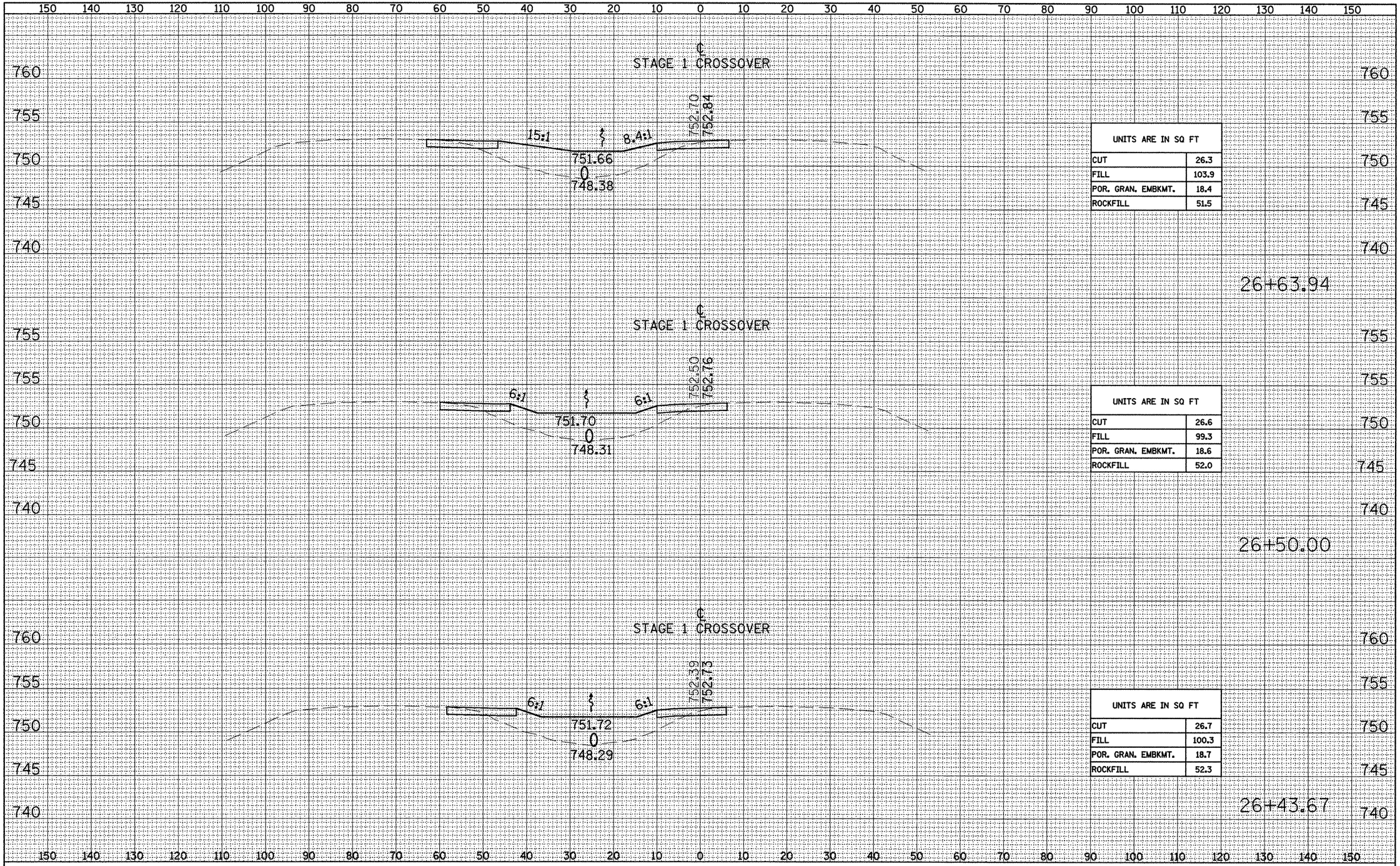

UNITS ARE IN SQ FT	
CUT	26.3
FILL	103.9
POR. GRAN. EMBKMT.	18.4
ROCKFILL	51.5

UNITS ARE IN SQ FT	
CUT	26.6
FILL	99.3
POR. GRAN. EMBKMT.	18.6
ROCKFILL	52.0

UNITS ARE IN SQ FT	
CUT	26.7
FILL	100.3
POR. GRAN. EMBKMT.	18.7
ROCKFILL	52.3

FINAL SURVEY	BY	DATE
SURVEYED		
PLOTTED		
TEMPLATE		
AREAS		
AREAS CHECKED		
NOTE BOOK NO.		

ORIGINAL SURVEY	BY	DATE
SURVEYED		
PLOTTED		
TEMPLATE		
AREAS		
AREAS CHECKED		
NOTE BOOK NO.		

FILE NAME = X-Sections for Temp X-over 12-13-08.dgn	USER NAME = toroja	DESIGNED - OWR	REVISED - N/A
		DRAWN - OWR	REVISED - N/A
	PLOT SCALE = 20.00 ' / IN.	CHECKED - FML	REVISED - N/A
	PLOT DATE = 12/13/2008	DATE - 11/2008	REVISED - N/A

STATE OF ILLINOIS
DEPARTMENT OF TRANSPORTATION

MAINTENANCE OF TRAFFIC RUNAROUND STAGE 1 CROSS SECTIONS
I-74 OVER TOWNSHIP ROAD 205

SCALE:1"=10'H & 5'V | SHEET NO. -- OF -- SHEETS | STA. 00+00.00 TO STA. 00+00.00

F.A.I. RTE.	SECTION	COUNTY	TOTAL SHEETS	SHEET NO.
74	48(27RS-3); (27HB-5)I. I-1	KNOX	104	71
		CONTRACT NO. 68062		
FED. ROAD DIST. NO.	ILLINOIS	FED. AID PROJECT		

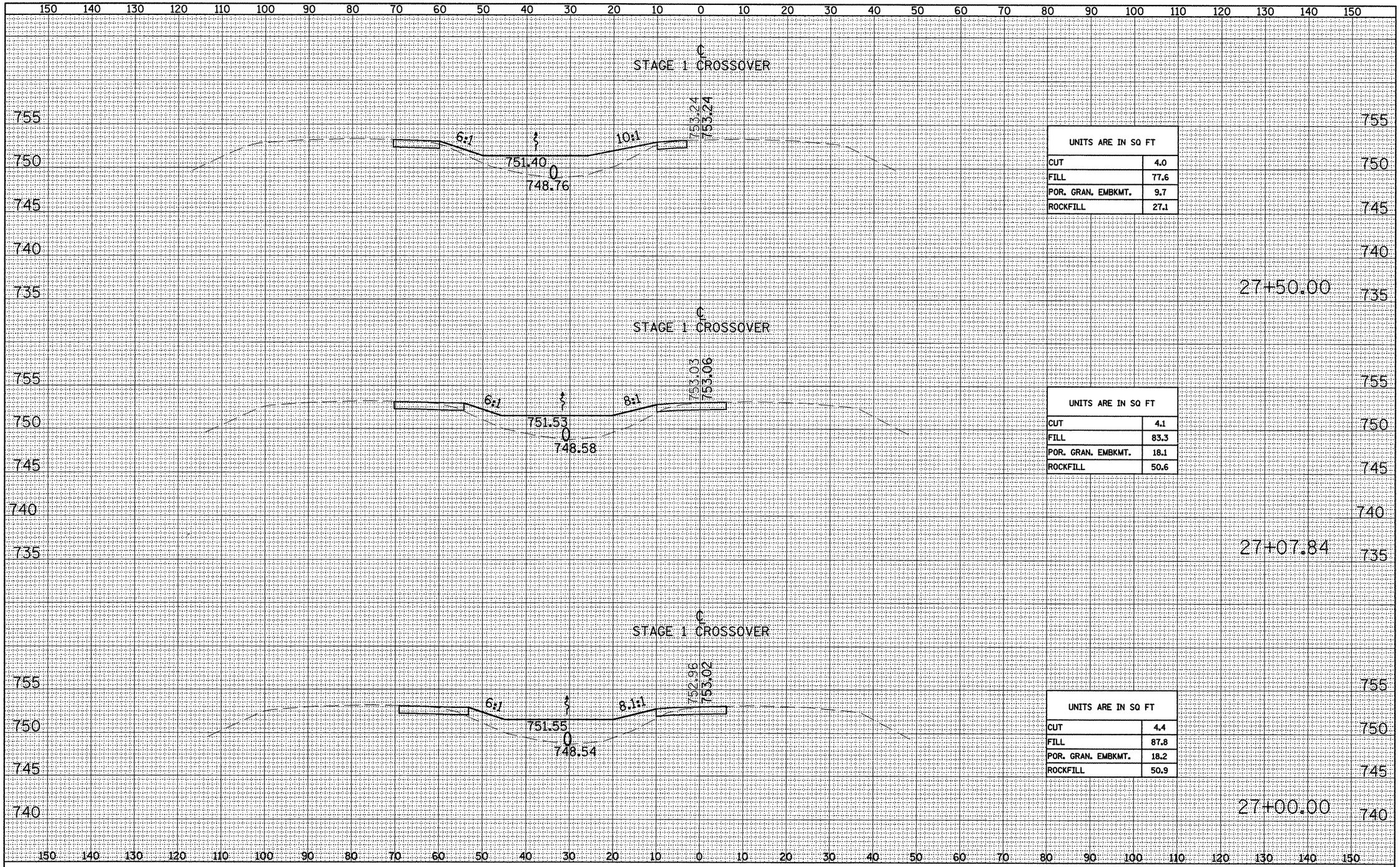

UNITS ARE IN SQ FT	
CUT	4.0
FILL	77.6
POR. GRAN. EMBKMT.	9.7
ROCKFILL	27.1

UNITS ARE IN SQ FT	
CUT	4.1
FILL	83.3
POR. GRAN. EMBKMT.	18.1
ROCKFILL	50.6

UNITS ARE IN SQ FT	
CUT	4.4
FILL	87.8
POR. GRAN. EMBKMT.	18.2
ROCKFILL	50.9

FINAL SURVEY	BY	DATE
SURVEYED		
PLOTTED		
TEMPLATE		
AREAS		
AREAS CHECKED		
NOTE BOOK NO.		

ORIGINAL SURVEY	BY	DATE
SURVEYED		
PLOTTED		
TEMPLATE		
AREAS		
AREAS CHECKED		
NOTE BOOK NO.		

FILE NAME = X-Sections for Temp X-over 12-13-08.dgn	USER NAME = toroja	DESIGNED - OWR	REVISED - N/A
		DRAWN - OWR	REVISED - N/A
	PLOT SCALE = 20.00 ' / IN.	CHECKED - FML	REVISED - N/A
	PLOT DATE = 12/13/2008	DATE - 11/2008	REVISED - N/A

STATE OF ILLINOIS
DEPARTMENT OF TRANSPORTATION

MAINTENANCE OF TRAFFIC RUNAROUND STAGE 1 CROSS SECTIONS
I-74 OVER TOWNSHIP ROAD 205

SCALE:1"=10'H & 5'V | SHEET NO. -- OF -- SHEETS | STA. 00+00.00 TO STA. 00+00.00

F.A.I. RTE.	SECTION	COUNTY	TOTAL SHEETS	SHEET NO.
74	48(27RS-3)₂ (27HB-5)I. I-1	KNOX	104	72
		CONTRACT NO. 68062		
FED. ROAD DIST. NO.	ILLINOIS	FED. AID PROJECT		

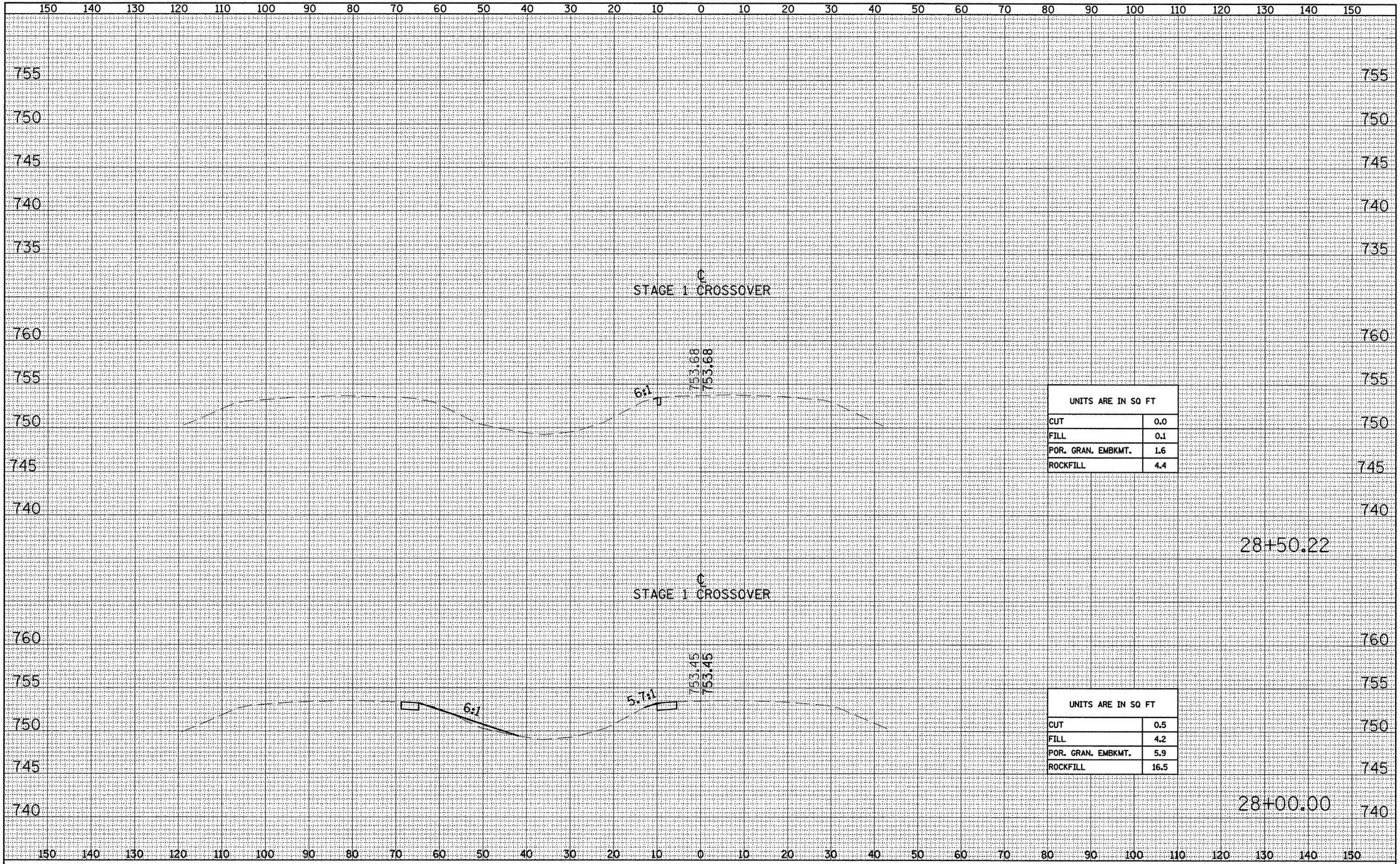

UNITS ARE IN SQ FT	
CUT	0.0
FILL	0.1
POR. GRAN. EMBKMT.	1.6
ROCKFILL	4.4

UNITS ARE IN SQ FT	
CUT	0.5
FILL	4.2
POR. GRAN. EMBKMT.	5.9
ROCKFILL	16.5

FINAL SURVEY		BY	DATE
NOTE BOOK	SURVEYED		
	PLOTTED		
	TEMPLATE		
	AREAS		
NO.	AREAS CHECKED		

ORIGINAL SURVEY		BY	DATE
NOTE BOOK	SURVEYED		
	PLOTTED		
	TEMPLATE		
	AREAS		
NO.	AREAS CHECKED		

FILE NAME = X-Sections for Temp X-over 12-13-08.dgn	USER NAME = taroja	DESIGNED - OWR	REVISED - N/A
		DRAWN - OWR	REVISED - N/A
	PLOT SCALE = 20.00 ' / IN.	CHECKED - FML	REVISED - N/A
	PLOT DATE = 12/13/2008	DATE - 11/2008	REVISED - N/A

STATE OF ILLINOIS
DEPARTMENT OF TRANSPORTATION

MAINTENANCE OF TRAFFIC RUNAROUND STAGE 1 CROSS SECTIONS
I-74 OVER TOWNSHIP ROAD 205

SCALE:1"=10'H & 5'V | SHEET NO. -- OF -- SHEETS | STA. 00+00.00 TO STA. 00+00.00

F.A.I. RTE.	SECTION	COUNTY	TOTAL SHEETS	SHEET NO.
74	48(27RS-3); (27HB-5)I. I-1	KNOX	104	73
		CONTRACT NO. 68062		
FED. ROAD DIST. NO.	ILLINOIS	FED. AID PROJECT		

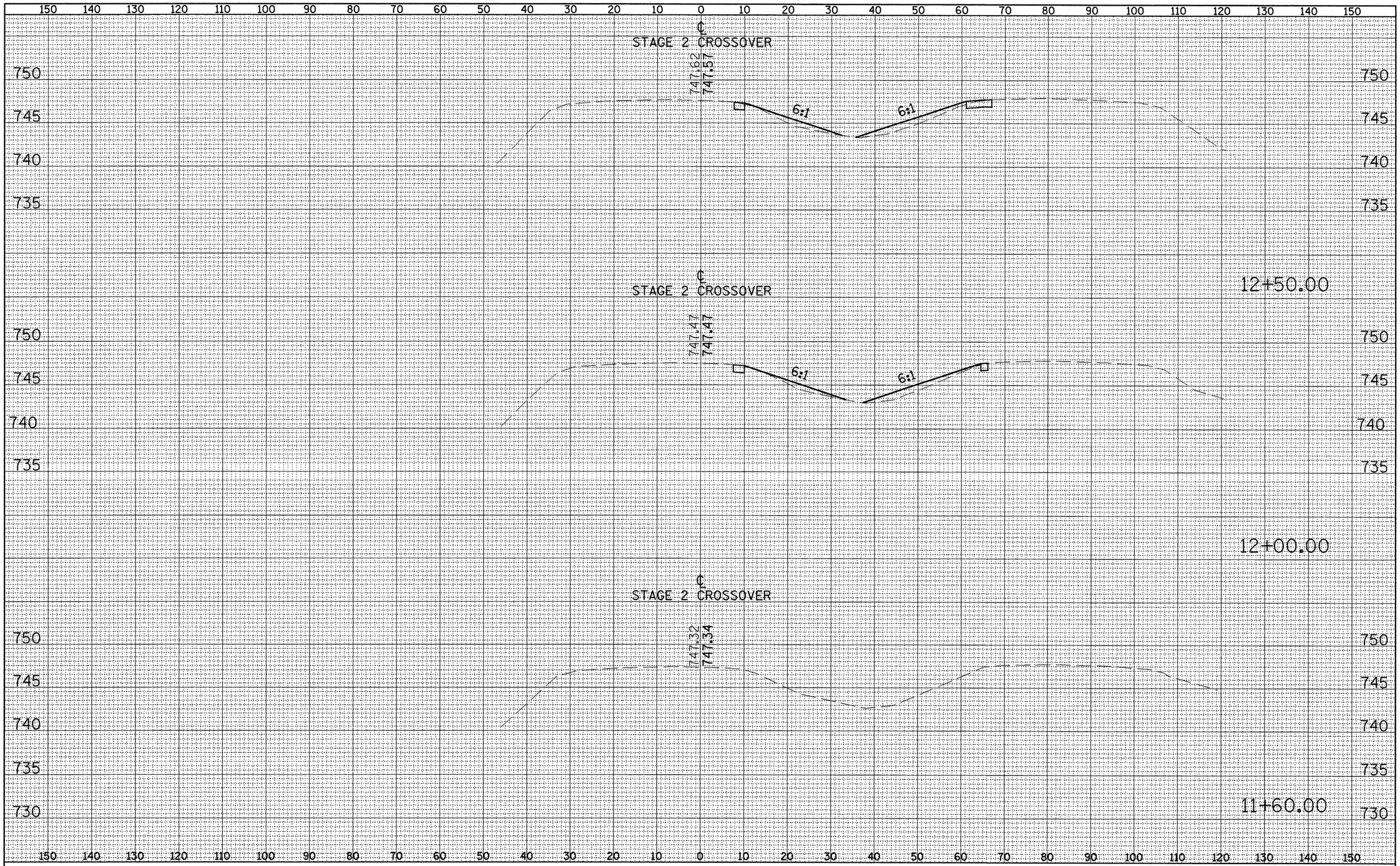

FINAL SURVEY		BY	DATE
NOTE BOOK NO.	SURVEYED		
	PLOTTED		
	TEMPLATE		
	AREAS		
	AREAS CHECKED		

ORIGINAL SURVEY		BY	DATE
NOTE BOOK NO.	SURVEYED		
	PLOTTED		
	TEMPLATE		
	AREAS		
	AREAS CHECKED		

FILE NAME = X-Sections for Temp X-over 12-13-08.dgn	USER NAME = toroja	DESIGNED - OWR	REVISED - N/A
		DRAWN - OWR	REVISED - N/A
	PLOT SCALE = 20.00 ' / IN.	CHECKED - FML	REVISED - N/A
	PLOT DATE = 12/13/2008	DATE - 11/2008	REVISED - N/A

STATE OF ILLINOIS
DEPARTMENT OF TRANSPORTATION

MAINTENANCE OF TRAFFIC RUNAROUND STAGE 2 CROSS SECTIONS
I-74 OVER TOWNSHIP ROAD 205

SCALE:1"=10'H & 5'V | SHEET NO. -- OF -- SHEETS | STA. 00+00.00 TO STA. 00+00.00

F.A.I. RTE.	SECTION	COUNTY	TOTAL SHEETS	SHEET NO.
74	48(27RS-3); (27HB-5)I. I-1	KNOX	104	74
		CONTRACT NO. 68062		
FED. ROAD DIST. NO.	ILLINOIS	FED. AID PROJECT		

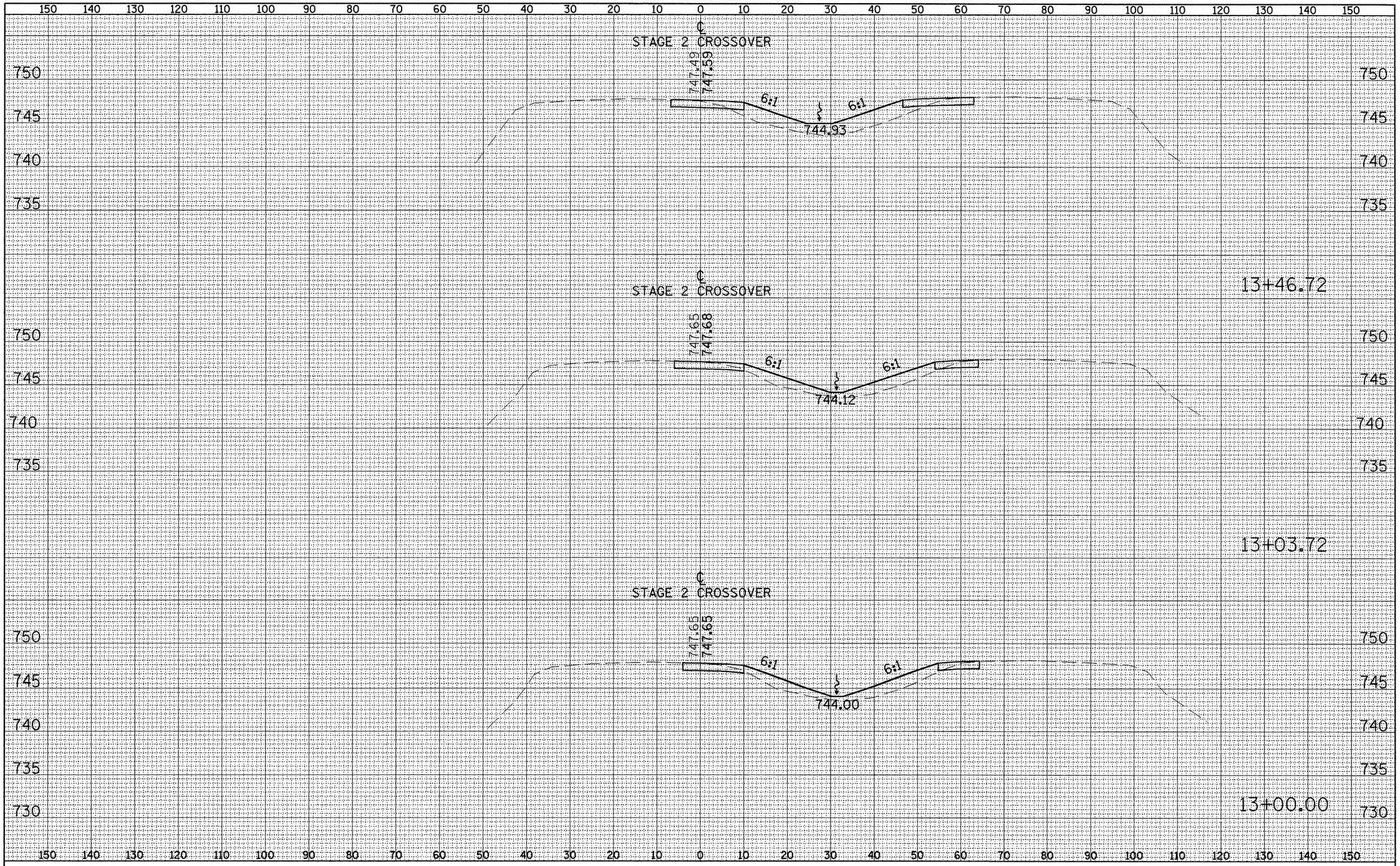

FINAL SURVEY	BY	DATE
SURVEYED		
PLOTTED		
TEMPLATE		
AREAS		
AREAS CHECKED		
NOTE BOOK NO.		

ORIGINAL SURVEY	BY	DATE
SURVEYED		
PLOTTED		
TEMPLATE		
AREAS		
AREAS CHECKED		
NOTE BOOK NO.		

FILE NAME = X-Sections for Temp X-over 12-13-08.dgn	USER NAME = toroja	DESIGNED - OWR	REVISED - N/A
		DRAWN - OWR	REVISED - N/A
	PLOT SCALE = 20.00 ' / IN.	CHECKED - FML	REVISED - N/A
	PLOT DATE = 12/13/2008	DATE - 11/2008	REVISED - N/A

STATE OF ILLINOIS
DEPARTMENT OF TRANSPORTATION

MAINTENANCE OF TRAFFIC RUNAROUND STAGE 2 CROSS SECTIONS
I-74 OVER TOWNSHIP ROAD 205

SCALE=1"=10'H & 5'V | SHEET NO. -- OF -- SHEETS | STA. 00+00.00 TO STA. 00+00.00

F.A.I. RTE.	SECTION	COUNTY	TOTAL SHEETS	SHEET NO.
74	48(27RS-3); (27HB-5)I. I-1	KNOX	104	75
		CONTRACT NO. 68062		
FED. ROAD DIST. NO.	ILLINOIS	FED. AID PROJECT		

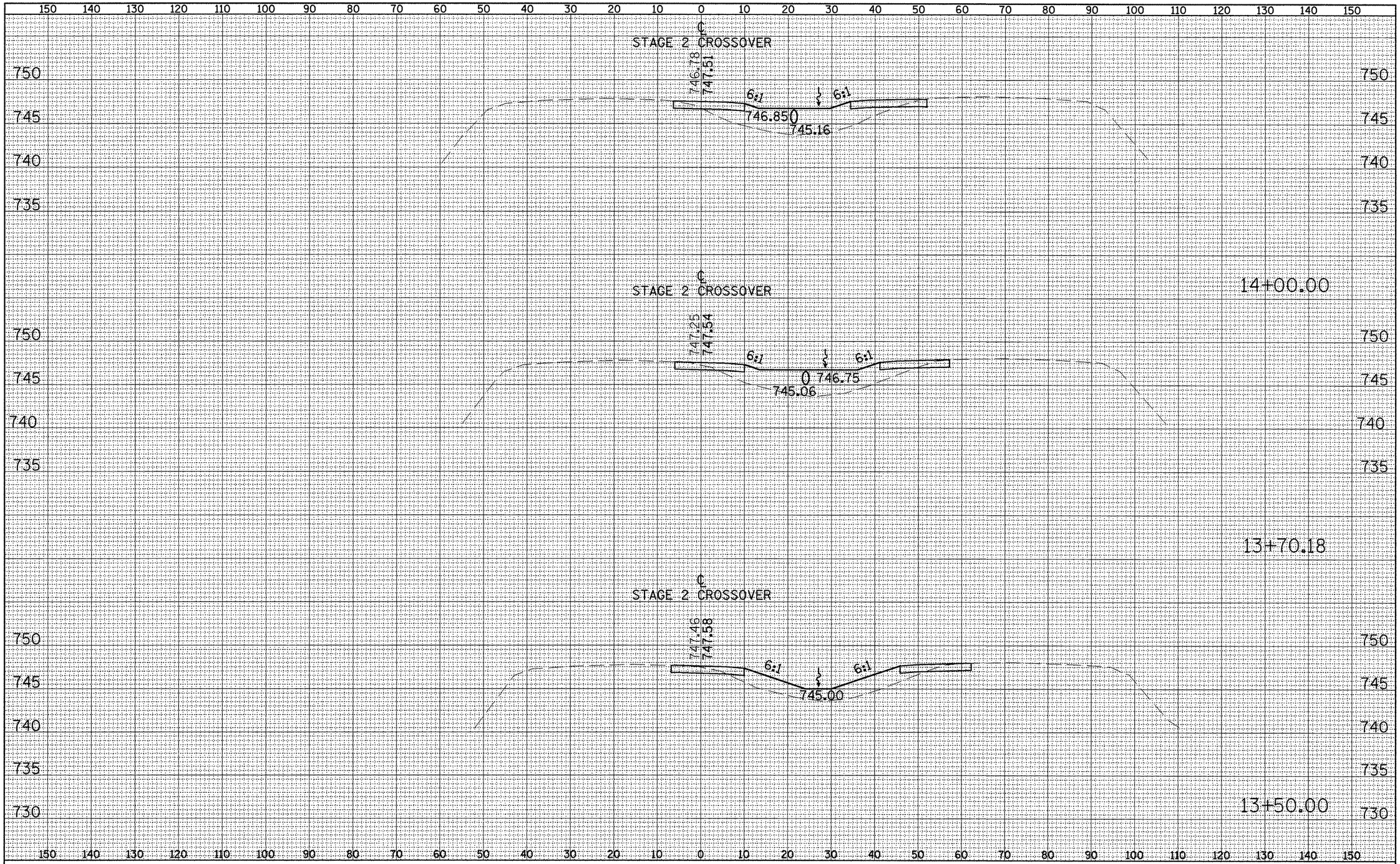

FINAL SURVEY	BY	DATE
SURVEYED		
PLOTTED		
TEMPLATE		
AREAS		
AREAS CHECKED		
NOTE BOOK NO.		

ORIGINAL SURVEY	BY	DATE
SURVEYED		
PLOTTED		
TEMPLATE		
AREAS		
AREAS CHECKED		
NOTE BOOK NO.		

FILE NAME = X-Sections for Temp X-over 12-13-08.dgn	USER NAME = toroja	DESIGNED - OWR	REVISED - N/A
		DRAWN - OWR	REVISED - N/A
	PLOT SCALE = 20.00 ' / IN.	CHECKED - FML	REVISED - N/A
	PLOT DATE = 12/13/2008	DATE - 11/2008	REVISED - N/A

STATE OF ILLINOIS
DEPARTMENT OF TRANSPORTATION

MAINTENANCE OF TRAFFIC RUNAROUND STAGE 2 CROSS SECTIONS
I-74 OVER TOWNSHIP ROAD 205

SCALE:1"=10'H & 5'V | SHEET NO. -- OF -- SHEETS | STA. 00+00.00 TO STA. 00+00.00

F.A.I. RTE.	SECTION	COUNTY	TOTAL SHEETS	SHEET NO.
74	48(27RS-3); (27HB-5)I. I-1	KNOX	104	76

CONTRACT NO. 68062

FED. ROAD DIST. NO. | ILLINOIS | FED. AID PROJECT

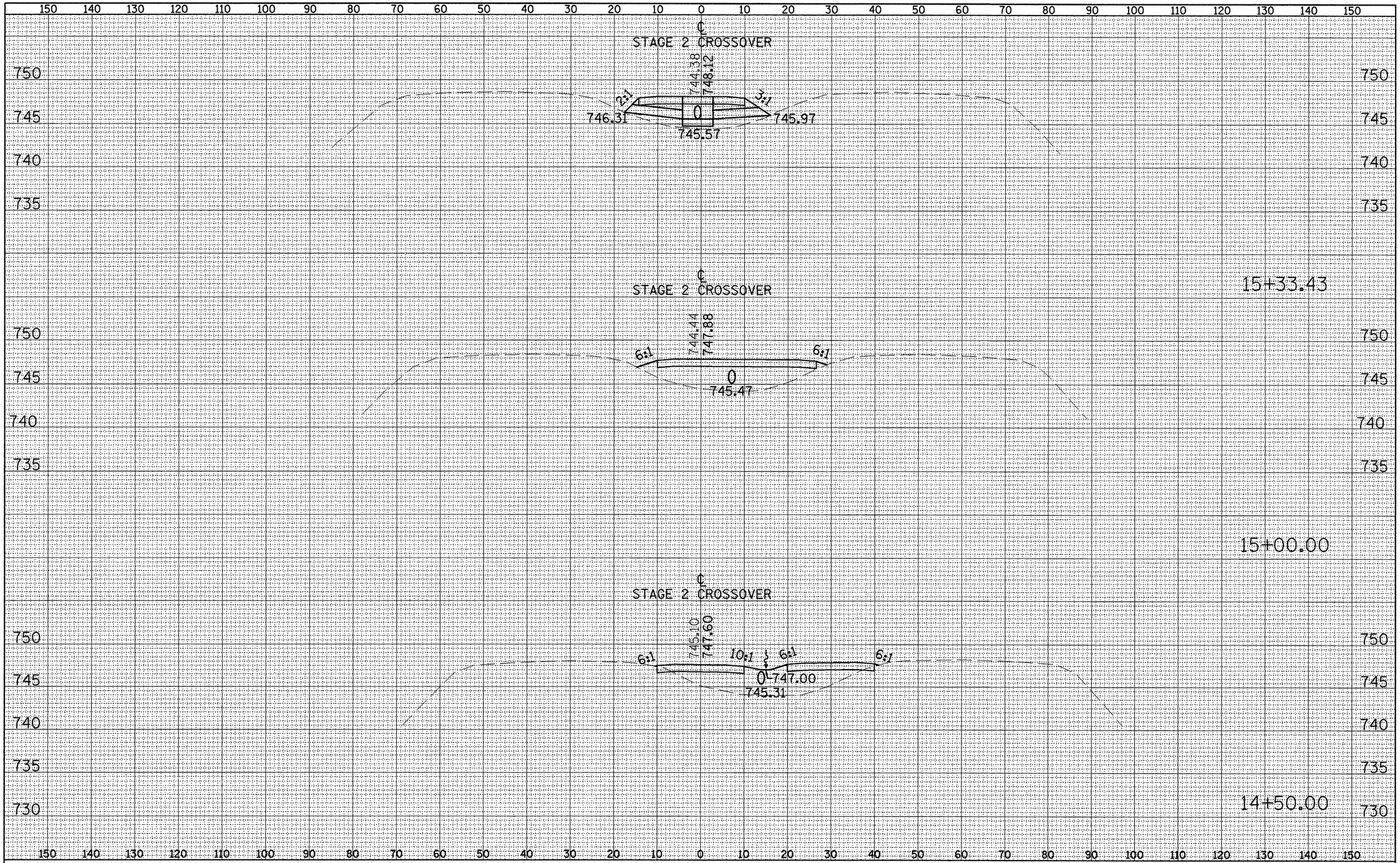

FINAL SURVEY		BY	DATE
NOTE BOOK	SURVEYED		
	PLOTTED		
	TEMPLATE		
	AREAS		
NO.	AREAS CHECKED		

ORIGINAL SURVEY		BY	DATE
NOTE BOOK	SURVEYED		
	PLOTTED		
	TEMPLATE		
	AREAS		
NO.	AREAS CHECKED		

FILE NAME = X-Sections for Temp X-over 12-13-08.dgn	USER NAME = toroja	DESIGNED - OWR	REVISED - N/A
		DRAWN - OWR	REVISED - N/A
	PLOT SCALE = 20.00 ' / IN.	CHECKED - FML	REVISED - N/A
	PLOT DATE = 12/13/2008	DATE - 11/2008	REVISED - N/A

STATE OF ILLINOIS
DEPARTMENT OF TRANSPORTATION

MAINTENANCE OF TRAFFIC RUNAROUND STAGE 2 CROSS SECTIONS
I-74 OVER TOWNSHIP ROAD 205

SCALE:1"=10'H & 5'V | SHEET NO. -- OF -- SHEETS | STA. 00+00.00 TO STA. 00+00.00

F.A.I. RTE.	SECTION	COUNTY	TOTAL SHEETS	SHEET NO.
74	48(27RS-3); (27HB-5)I. I-1	KNOX	104	77

CONTRACT NO. 68062

FED. ROAD DIST. NO. | ILLINOIS | FED. AID PROJECT

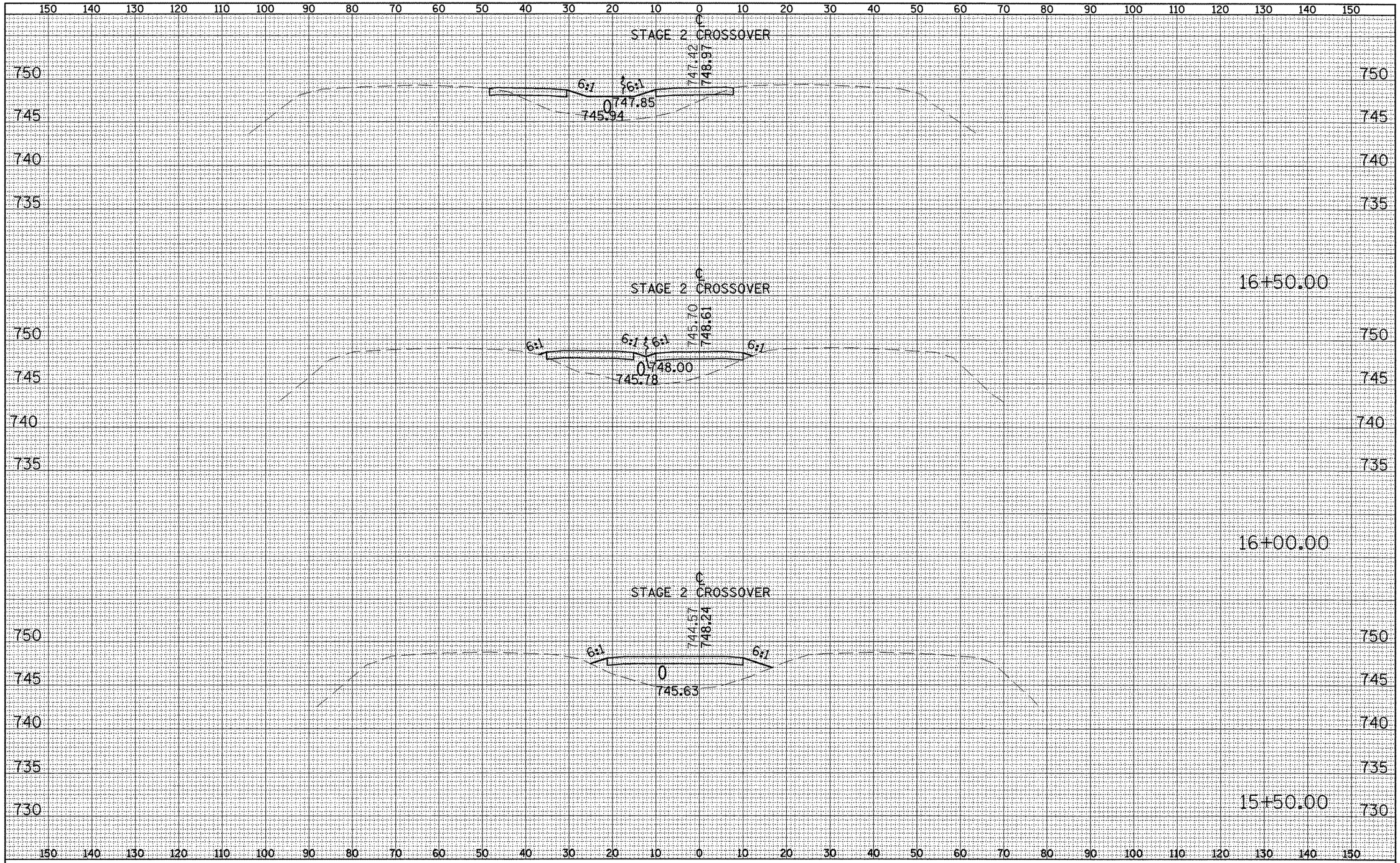

FINAL SURVEY		BY	DATE
NOTE BOOK	SURVEYED		
	PLOTTED		
	TEMPLATE		
	AREAS		
NO.	AREAS CHECKED		

ORIGINAL SURVEY		BY	DATE
NOTE BOOK	SURVEYED		
	PLOTTED		
	TEMPLATE		
	AREAS		
NO.	AREAS CHECKED		

FILE NAME = X-Sections for Temp X-over 12-13-08.dgn	USER NAME = toroja	DESIGNED - OWR	REVISED - N/A
		DRAWN - OWR	REVISED - N/A
	PLOT SCALE = 20.00 ' / IN.	CHECKED - FML	REVISED - N/A
	PLOT DATE = 12/13/2008	DATE - 11/2008	REVISED - N/A

STATE OF ILLINOIS
DEPARTMENT OF TRANSPORTATION

MAINTENANCE OF TRAFFIC RUNAROUND STAGE 2 CROSS SECTIONS
I-74 OVER TOWNSHIP ROAD 205

SCALE:1"=10'H & 5'V | SHEET NO. -- OF -- SHEETS | STA. 00+00.00 TO STA. 00+00.00

F.A.I. RTE.	SECTION	COUNTY	TOTAL SHEETS	SHEET NO.
74	48(27RS-3); (27HB-5)I. I-1	KNOX	104	78

CONTRACT NO. 68062

FED. ROAD DIST. NO. | ILLINOIS | FED. AID PROJECT

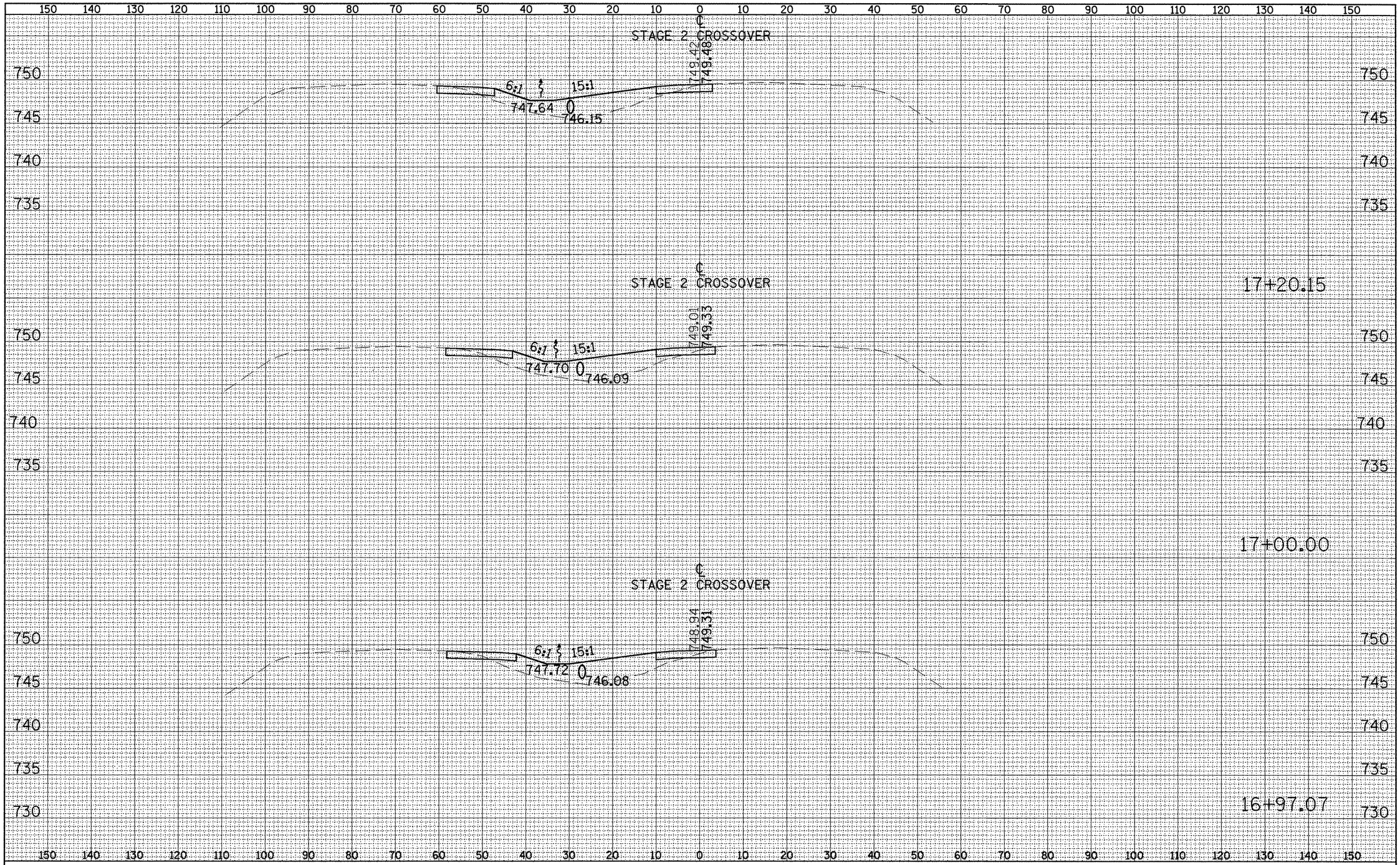

FINAL SURVEY	BY	DATE
SURVEYED		
PLOTTED		
TEMPLATE		
AREAS		
AREAS CHECKED		
NOTE BOOK		
NO.		

ORIGINAL SURVEY	BY	DATE
SURVEYED		
PLOTTED		
TEMPLATE		
AREAS		
AREAS CHECKED		
NOTE BOOK		
NO.		

FILE NAME = X-Sections for Temp X-over 12-13-08.dgn	USER NAME = toroja	DESIGNED - OWR	REVISED - N/A
		DRAWN - OWR	REVISED - N/A
	PLOT SCALE = 20.00 ' / IN.	CHECKED - FML	REVISED - N/A
	PLOT DATE = 12/13/2008	DATE - 11/2008	REVISED - N/A

STATE OF ILLINOIS
DEPARTMENT OF TRANSPORTATION

MAINTENANCE OF TRAFFIC RUNAROUND STAGE 2 CROSS SECTIONS
I-74 OVER TOWNSHIP ROAD 205

SCALE:1"=10'H & 5'V | SHEET NO. -- OF -- SHEETS | STA. 00+00.00 TO STA. 00+00.00

F.A.I. RTE.	SECTION	COUNTY	TOTAL SHEETS	SHEET NO.
74	48(27RS-3); (27HB-5)I. I-1	KNOX	104	79

CONTRACT NO. 68062

FED. ROAD DIST. NO. | ILLINOIS | FED. AID PROJECT

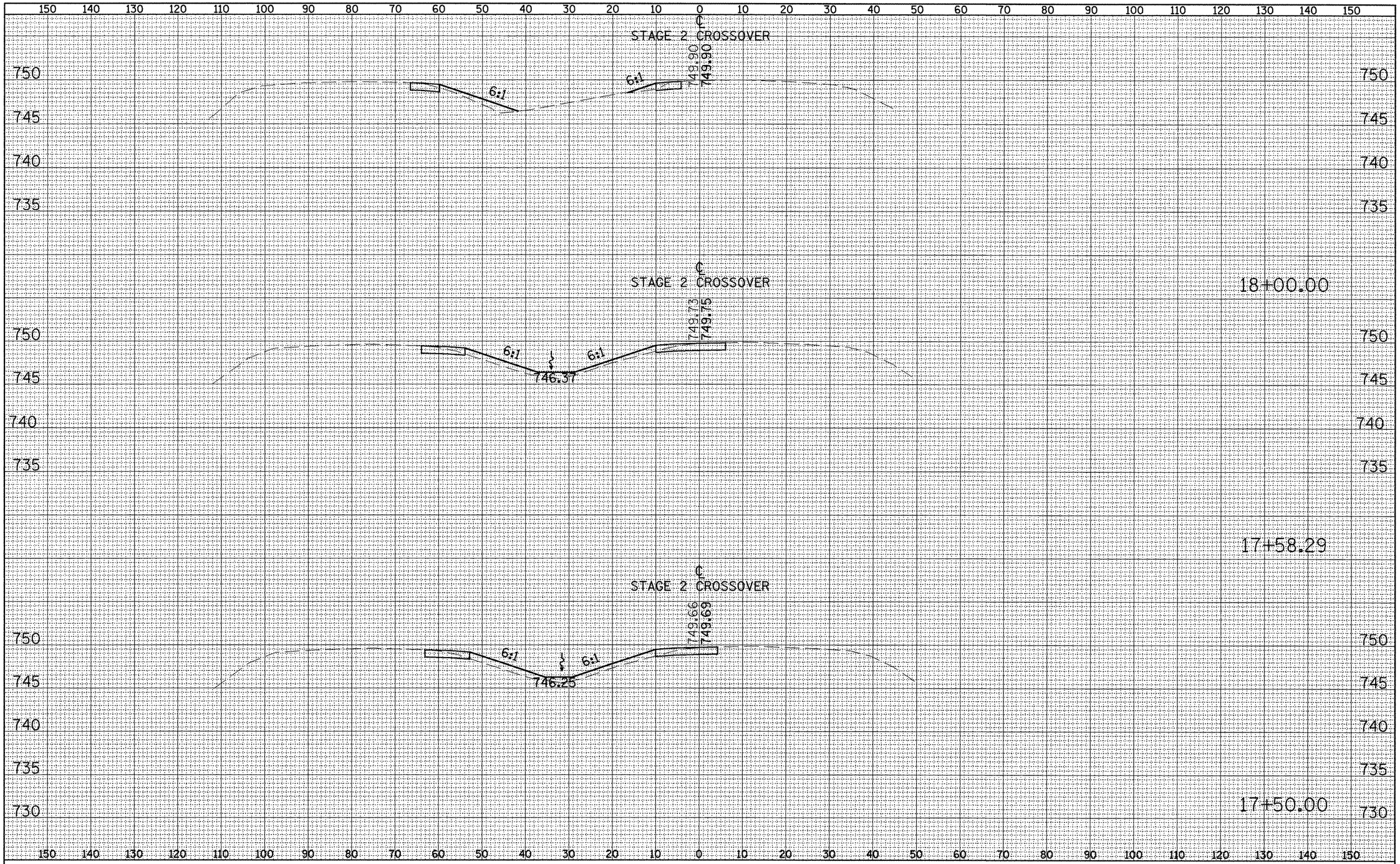

FINAL SURVEY	BY	DATE
SURVEYED		
PLOTTED		
TEMPLATE		
AREAS		
AREAS CHECKED		
NOTE BOOK NO.		

ORIGINAL SURVEY	BY	DATE
SURVEYED		
PLOTTED		
TEMPLATE		
AREAS		
AREAS CHECKED		
NOTE BOOK NO.		

FILE NAME = X-Sections for Temp X-over 12-13-08.dgn	USER NAME = toroja	DESIGNED - OWR	REVISED - N/A
		DRAWN - OWR	REVISED - N/A
	PLOT SCALE = 20.00 ' / IN.	CHECKED - FML	REVISED - N/A
	PLOT DATE = 12/13/2008	DATE - 11/2008	REVISED - N/A

STATE OF ILLINOIS
DEPARTMENT OF TRANSPORTATION

MAINTENANCE OF TRAFFIC RUNAROUND STAGE 2 CROSS SECTIONS
I-74 OVER TOWNSHIP ROAD 205

SCALE1"=10'H & 5'V | SHEET NO. -- OF -- SHEETS | STA. 00+00.00 TO STA. 00+00.00

F.A.I. RTE.	SECTION	COUNTY	TOTAL SHEETS	SHEET NO.
74	48(27RS-3); (27HB-5)I. I-1	KNOX	104	80

CONTRACT NO. 68062

FED. ROAD DIST. NO. | ILLINOIS | FED. AID PROJECT

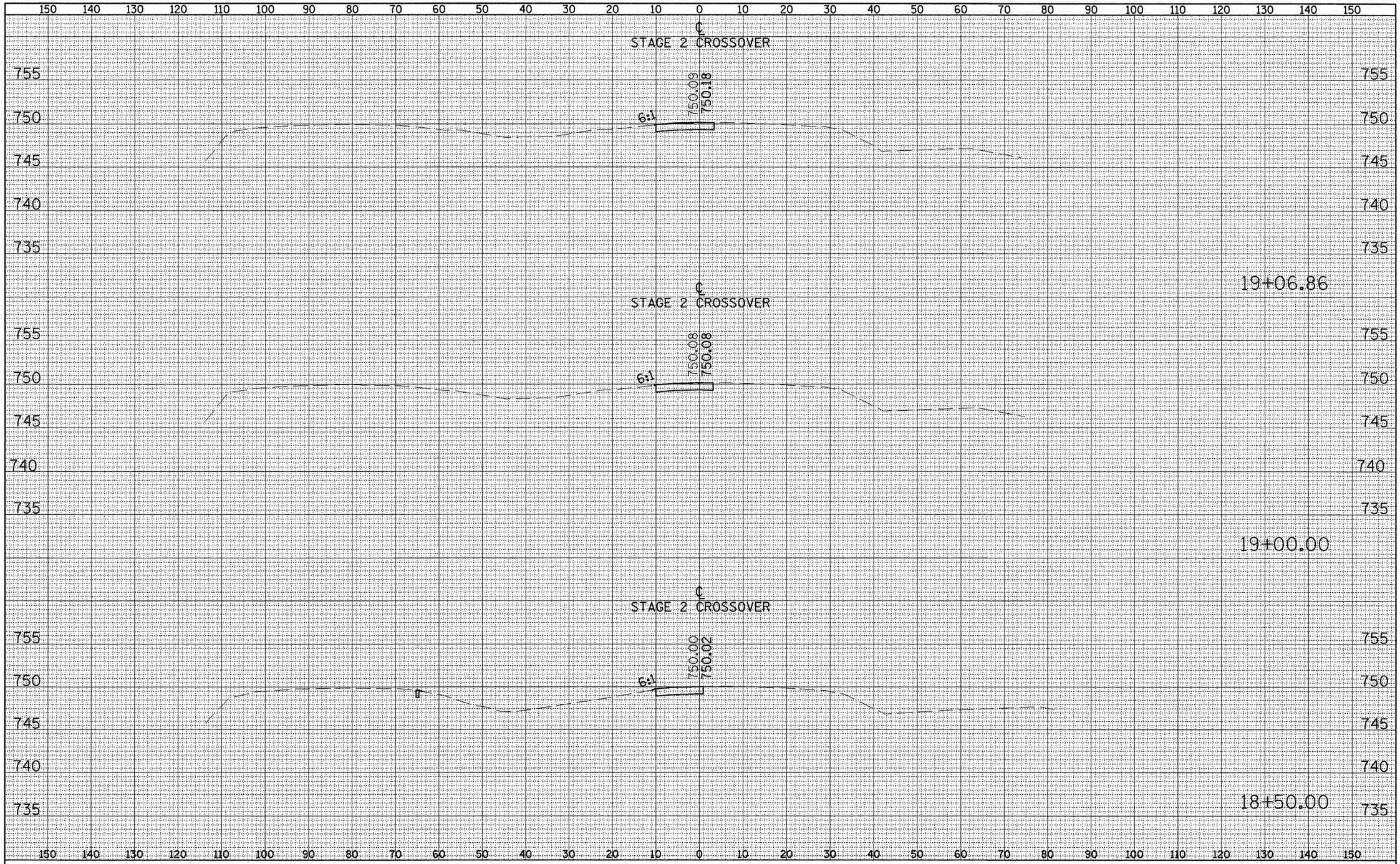

FINAL SURVEY	BY	DATE
SURVEYED		
PLOTTED		
TEMPLATE		
AREAS		
AREAS CHECKED		
NOTE BOOK NO.		

ORIGINAL SURVEY	BY	DATE
SURVEYED		
PLOTTED		
TEMPLATE		
AREAS		
AREAS CHECKED		
NOTE BOOK NO.		

FILE NAME = X-Sections for Temp X-over 12-13-08.dgn	USER NAME = toroja	DESIGNED - OWR	REVISED - N/A
		DRAWN - OWR	REVISED - N/A
	PLOT SCALE = 20.00 ' / IN.	CHECKED - FML	REVISED - N/A
	PLOT DATE = 12/13/2008	DATE - 11/2008	REVISED - N/A

STATE OF ILLINOIS
DEPARTMENT OF TRANSPORTATION

MAINTENANCE OF TRAFFIC RUNAROUND STAGE 2 CROSS SECTIONS
I-74 OVER TOWNSHIP ROAD 205

SCALE:1"=10'H & 5'V | SHEET NO. -- OF -- SHEETS | STA. 00+00.00 TO STA. 00+00.00

F.A.I. RTE.	SECTION	COUNTY	TOTAL SHEETS	SHEET NO.
74	48(27RS-3); (27HB-5)I. I-1	KNOX	104	81

CONTRACT NO. 68062

FED. ROAD DIST. NO. | ILLINOIS | FED. AID PROJECT

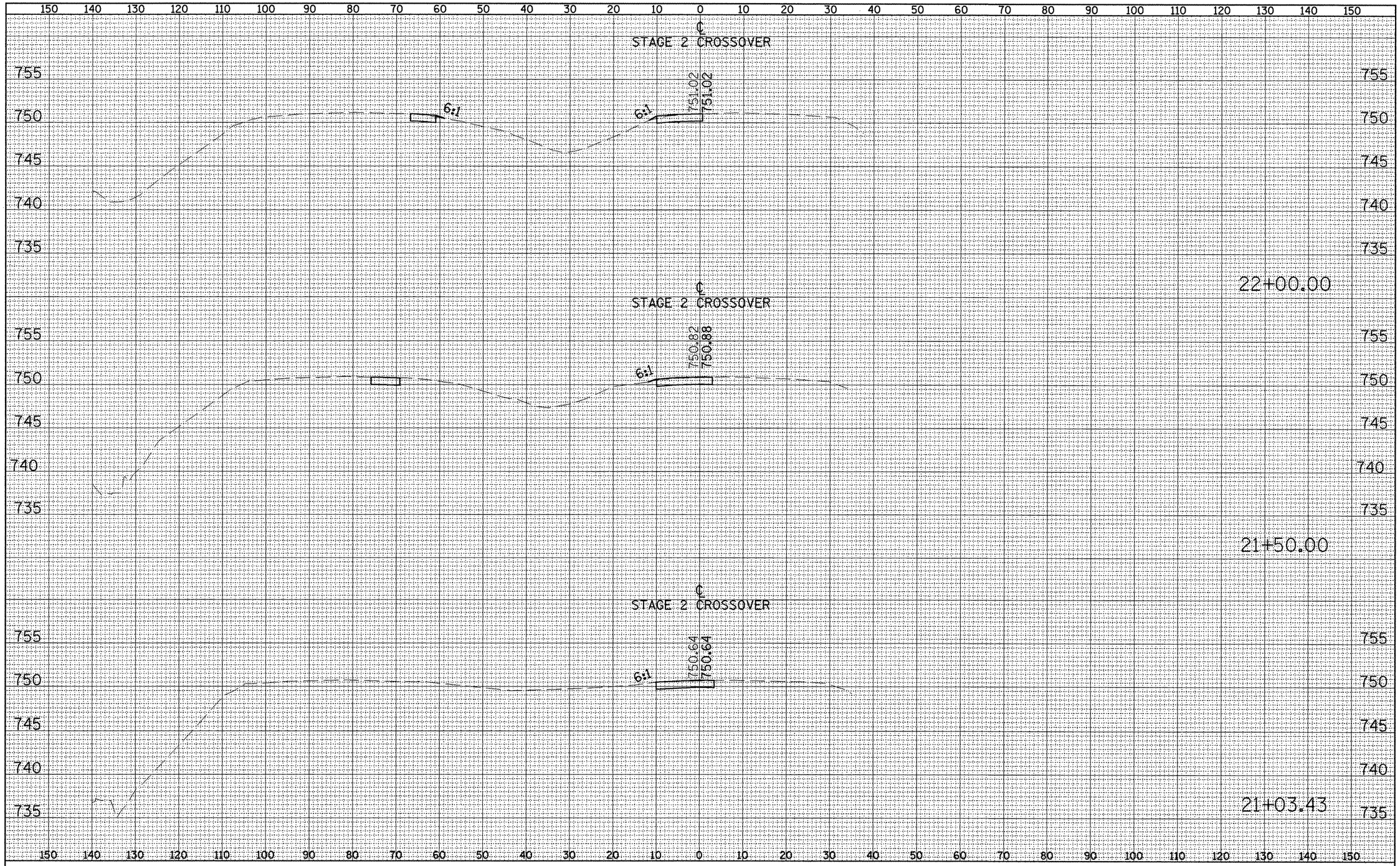

FINAL SURVEY	BY	DATE
SURVEYED		
PLOTTED		
TEMPLATE		
AREAS		
AREAS CHECKED		
NOTE BOOK NO.		

ORIGINAL SURVEY	BY	DATE
SURVEYED		
PLOTTED		
TEMPLATE		
AREAS		
AREAS CHECKED		
NOTE BOOK NO.		

FILE NAME = X-Sections for Temp X-over 12-13-08.dgn	USER NAME = troja	DESIGNED - OWR	REVISED - N/A
		DRAWN - OWR	REVISED - N/A
	PLOT SCALE = 20.00 ' / IN.	CHECKED - FML	REVISED - N/A
	PLOT DATE = 12/13/2008	DATE - 11/2008	REVISED - N/A

STATE OF ILLINOIS
DEPARTMENT OF TRANSPORTATION

MAINTENANCE OF TRAFFIC RUNAROUND STAGE 2 CROSS SECTIONS
I-74 OVER TOWNSHIP ROAD 205

SCALE:1"=10'H & 5'V | SHEET NO. -- OF -- SHEETS | STA. 00+00.00 TO STA. 00+00.00

F.A.I. RTE.	SECTION	COUNTY	TOTAL SHEETS	SHEET NO.
74	48(27RS-3)½ (27HB-5)I. I-1	KNOX	104	82
		CONTRACT NO. 68062		
FED. ROAD DIST. NO.	ILLINOIS	FED. AID PROJECT		

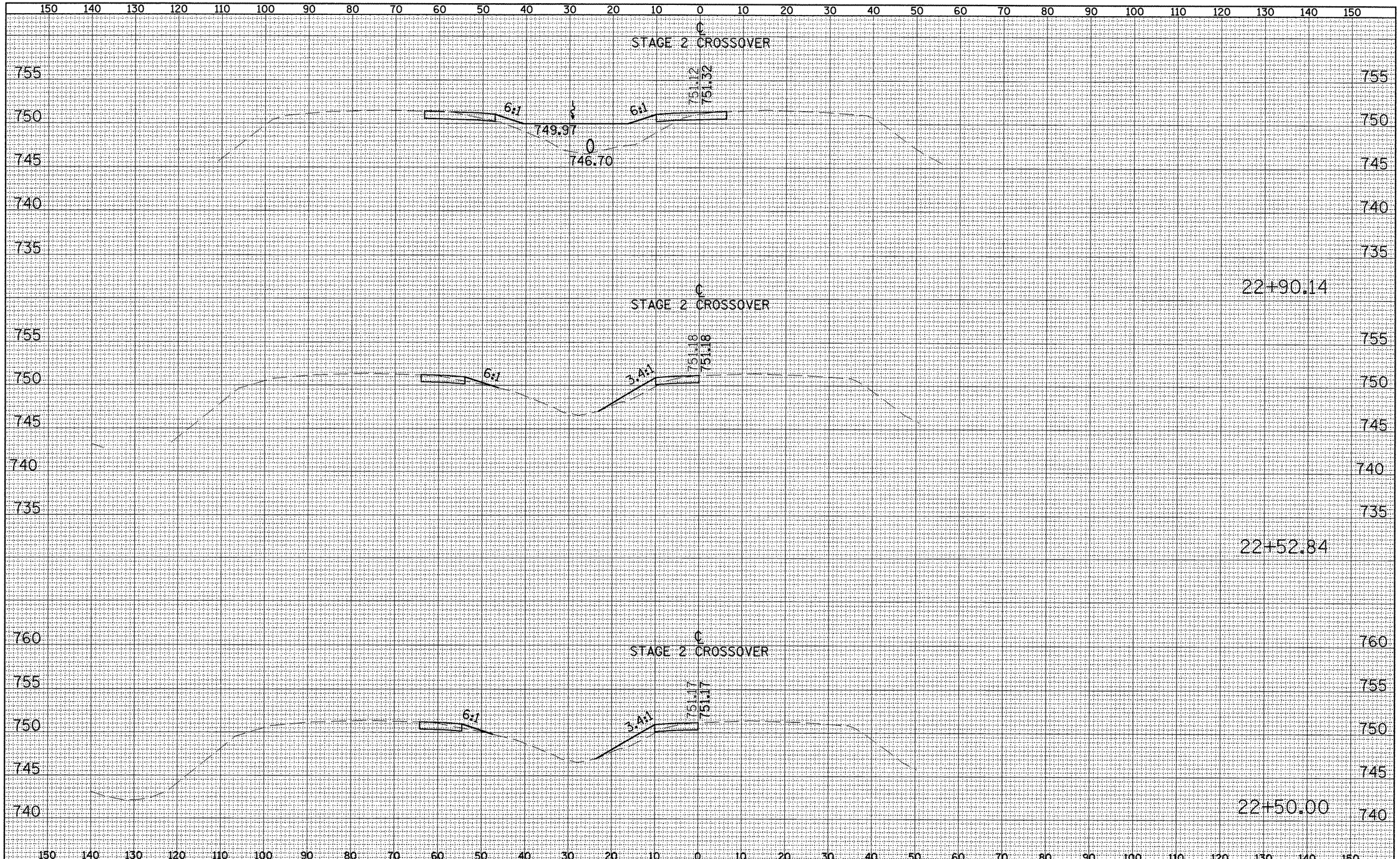

FINAL SURVEY	BY	DATE
SURVEYED		
PLOTTED		
TEMPLATE		
AREAS		
AREAS CHECKED		
NOTE BOOK NO.		

ORIGINAL SURVEY	BY	DATE
SURVEYED		
PLOTTED		
TEMPLATE		
AREAS		
AREAS CHECKED		
NOTE BOOK NO.		

FILE NAME = X-Sections for Temp X-over 12-13-08.dgn	USER NAME = toroja	DESIGNED - OWR	REVISED - N/A
		DRAWN - OWR	REVISED - N/A
	PLOT SCALE = 20.00 ' / IN.	CHECKED - FML	REVISED - N/A
	PLOT DATE = 12/13/2008	DATE - 11/2008	REVISED - N/A

STATE OF ILLINOIS
DEPARTMENT OF TRANSPORTATION

MAINTENANCE OF TRAFFIC RUNAROUND STAGE 2 CROSS SECTIONS
I-74 OVER TOWNSHIP ROAD 205

SCALE:1"=10'H & 5'V | SHEET NO. -- OF -- SHEETS | STA. 00+00.00 TO STA. 00+00.00

F.A.I. RTE.	SECTION	COUNTY	TOTAL SHEETS	SHEET NO.
74	48(27RS-3); (27HB-5)I. I-1	KNOX	104	83

CONTRACT NO. 68062

FED. ROAD DIST. NO. | ILLINOIS | FED. AID PROJECT

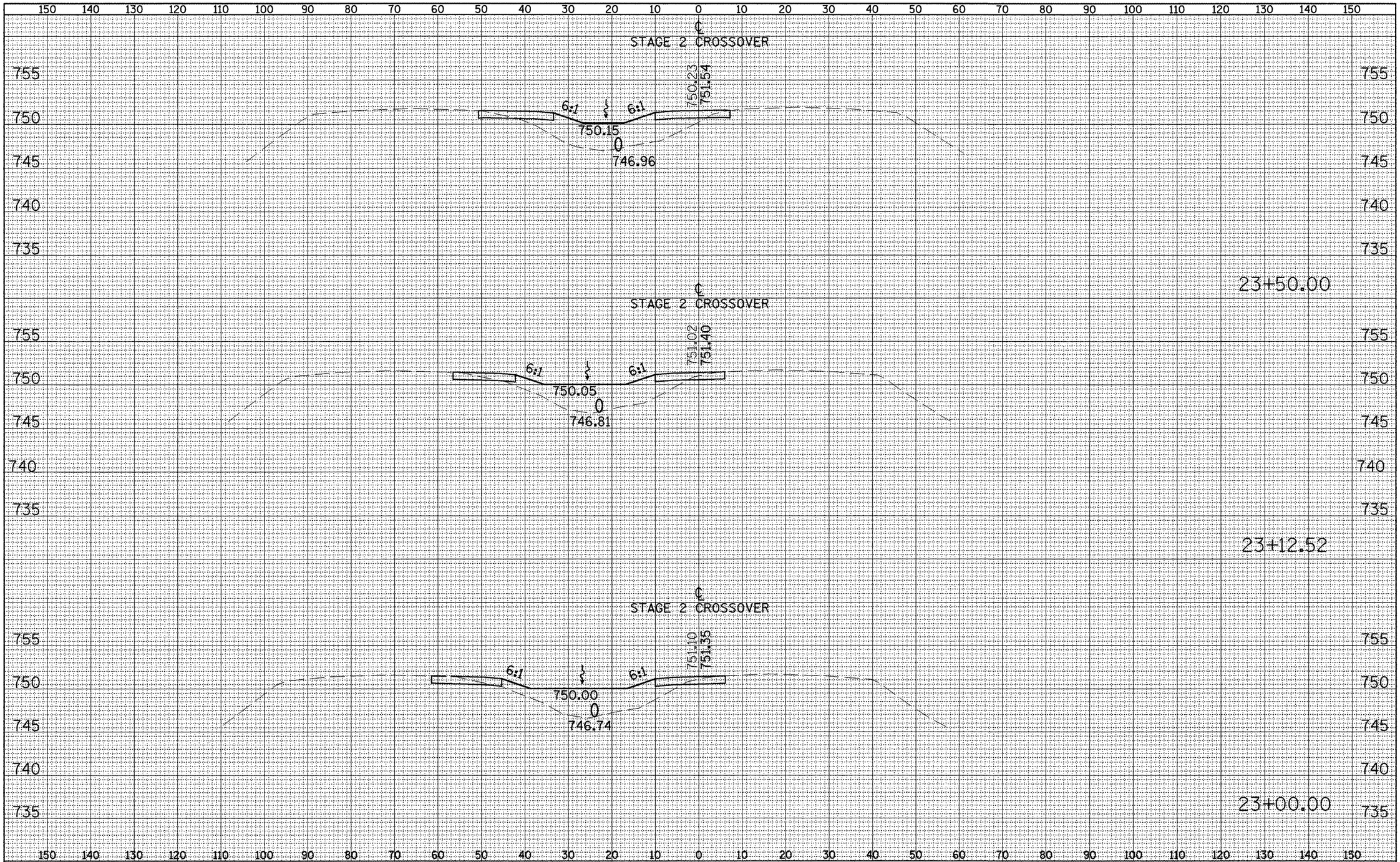

FINAL SURVEY		BY	DATE
NOTE BOOK NO.	SURVEYED		
	PLOTTED		
	TEMPLATE		
	AREAS		
	AREAS CHECKED		

ORIGINAL SURVEY		BY	DATE
NOTE BOOK NO.	SURVEYED		
	PLOTTED		
	TEMPLATE		
	AREAS		
	AREAS CHECKED		

FILE NAME = X-Sections for Temp X-over 12-13-08.dgn	USER NAME = toroja	DESIGNED - OWR	REVISED - N/A
		DRAWN - OWR	REVISED - N/A
	PLOT SCALE = 20.00 ' / IN.	CHECKED - FML	REVISED - N/A
	PLOT DATE = 12/13/2008	DATE - 11/2008	REVISED - N/A

STATE OF ILLINOIS
DEPARTMENT OF TRANSPORTATION

MAINTENANCE OF TRAFFIC RUNAROUND STAGE 2 CROSS SECTIONS
I-74 OVER TOWNSHIP ROAD 205

SCALE:1"=10'H & 5'V | SHEET NO. -- OF -- SHEETS | STA. 00+00.00 TO STA. 00+00.00

F.A.I. RTE.	SECTION	COUNTY	TOTAL SHEETS	SHEET NO.
74	48(27RS-3); (27HB-5)I. I-1	KNOX	104	84
		CONTRACT NO. 68062		
FED. ROAD DIST. NO.	ILLINOIS	FED. AID PROJECT		

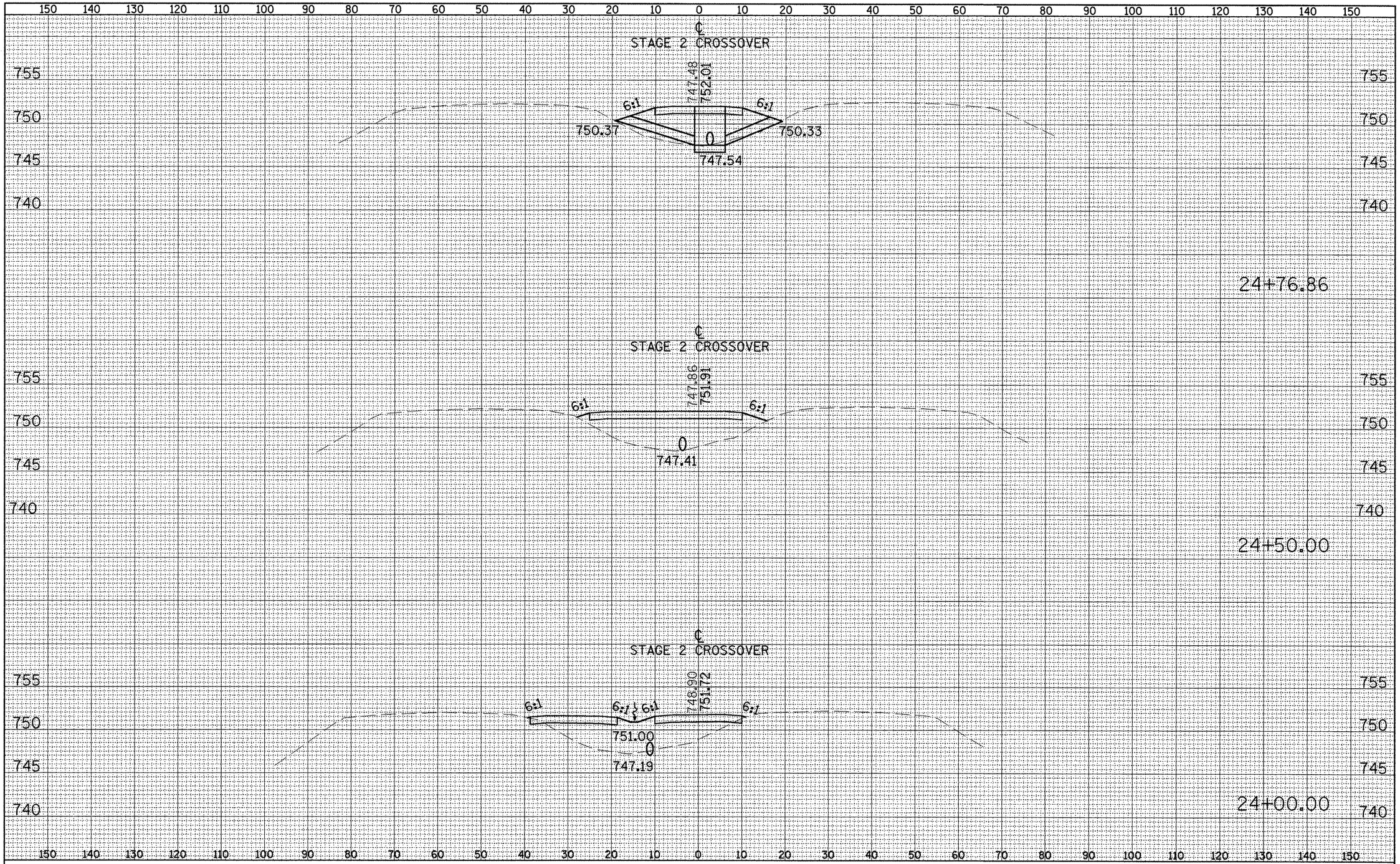

FINAL SURVEY		BY	DATE
NOTE BOOK	SURVEYED		
	PLOTTED		
	TEMPLATE		
	AREAS		
NO.	AREAS CHECKED		

ORIGINAL SURVEY		BY	DATE
NOTE BOOK	SURVEYED		
	PLOTTED		
	TEMPLATE		
	AREAS		
NO.	AREAS CHECKED		

FILE NAME = X-Sections for Temp X-over 12-13-08.dgn	USER NAME = taroja	DESIGNED - OWR	REVISED - N/A
		DRAWN - OWR	REVISED - N/A
	PLOT SCALE = 20.00 ' / IN.	CHECKED - FML	REVISED - N/A
	PLOT DATE = 12/13/2008	DATE - 11/2008	REVISED - N/A

STATE OF ILLINOIS
DEPARTMENT OF TRANSPORTATION

MAINTENANCE OF TRAFFIC RUNAROUND STAGE 2 CROSS SECTIONS
I-74 OVER TOWNSHIP ROAD 205

SCALE:1"=10'H & 5'V | SHEET NO. -- OF -- SHEETS | STA. 00+00.00 TO STA. 00+00.00

F.A.I. RTE.	SECTION	COUNTY	TOTAL SHEETS	SHEET NO.
74	48(27RS-3); (27HB-5)I. I-1	KNOX	104	85

CONTRACT NO. 68062

FED. ROAD DIST. NO. | ILLINOIS | FED. AID PROJECT

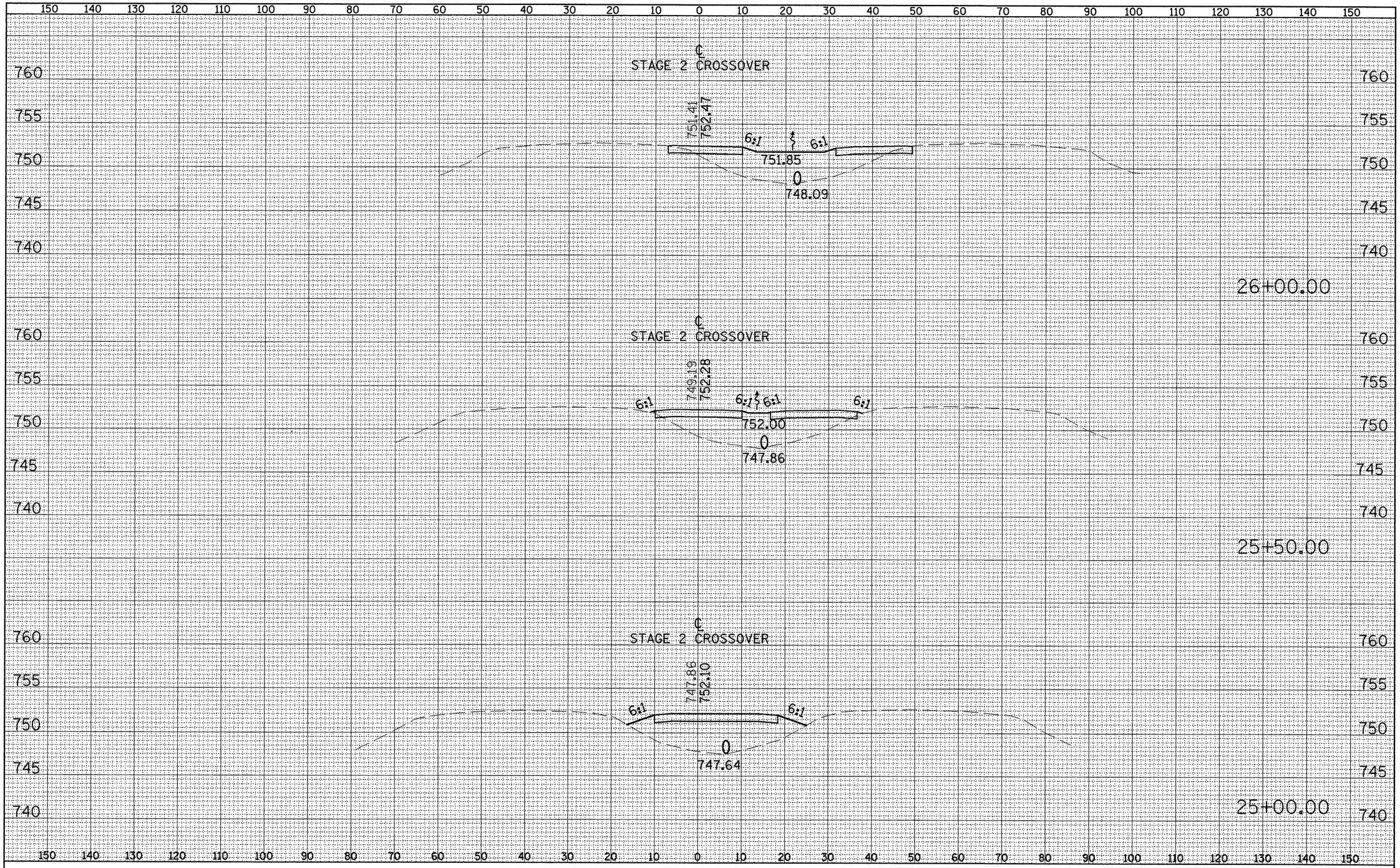

FINAL SURVEY		BY	DATE
NOTE BOOK	SURVEYED		
	PLOTTED		
	TEMPLATE		
	AREAS		
NO.	AREAS CHECKED		

ORIGINAL SURVEY		BY	DATE
NOTE BOOK	SURVEYED		
	PLOTTED		
	TEMPLATE		
	AREAS		
NO.	AREAS CHECKED		

FILE NAME = X-Sections for Temp X-over 12-13-08.dgn	USER NAME = to-ojs	DESIGNED - OWR	REVISED - N/A
		DRAWN - OWR	REVISED - N/A
	PLOT SCALE = 20.00 ' / IN.	CHECKED - FML	REVISED - N/A
	PLOT DATE = 12/13/2008	DATE - 11/2008	REVISED - N/A

STATE OF ILLINOIS
DEPARTMENT OF TRANSPORTATION

MAINTENANCE OF TRAFFIC RUNAROUND STAGE 2 CROSS SECTIONS
I-74 OVER TOWNSHIP ROAD 205

SCALE:1"=10'H & 5'V | SHEET NO. -- OF -- SHEETS | STA. 00+00.00 TO STA. 00+00.00

F.A.I. RTE.	SECTION	COUNTY	TOTAL SHEETS	SHEET NO.
74	48(27RS-3); (27HB-5)I. I-1	KNOX	104	86

CONTRACT NO. 68062

FED. ROAD DIST. NO. | ILLINOIS | FED. AID PROJECT

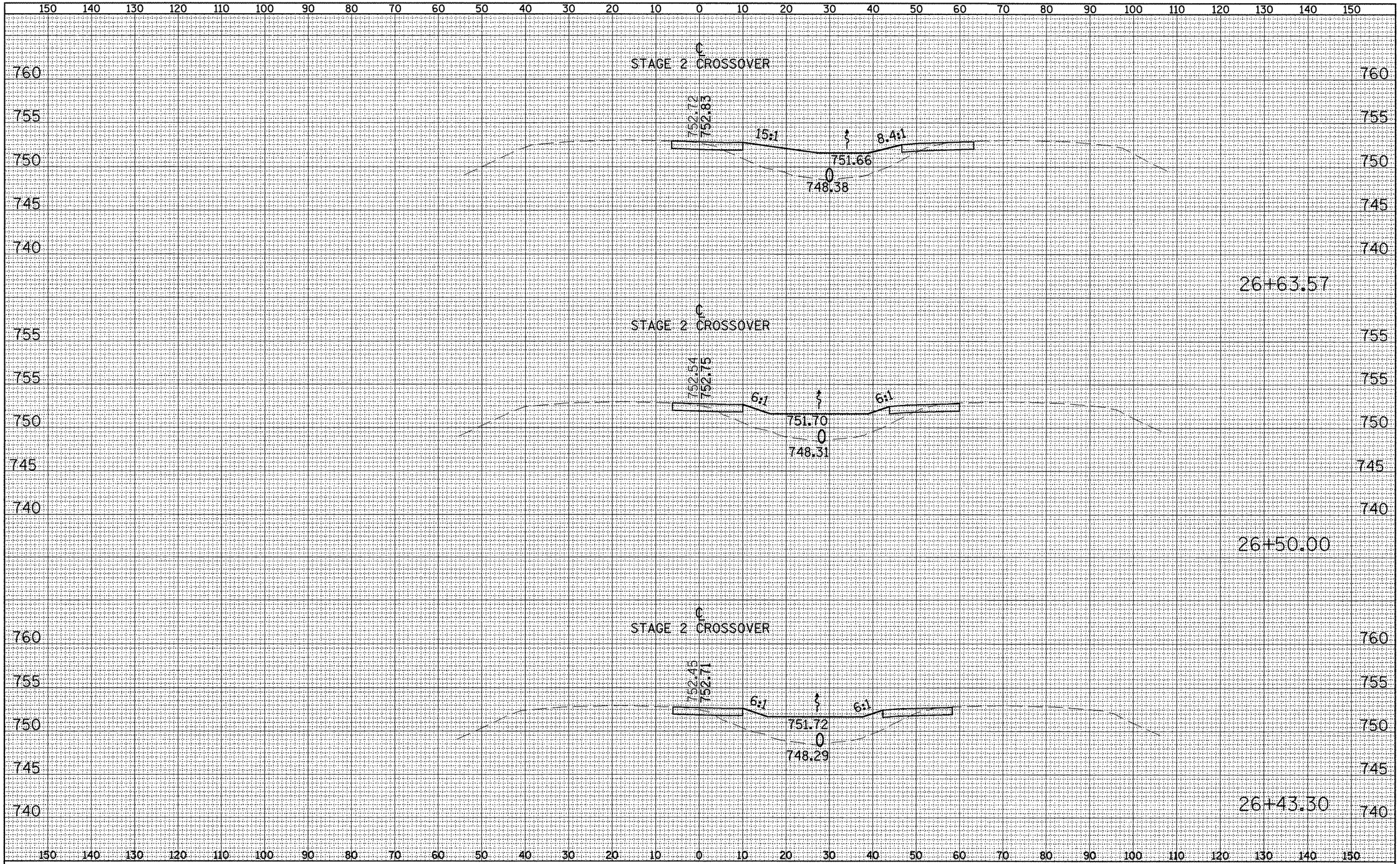

FINAL SURVEY	BY	DATE
SURVEYED		
PLOTTED		
TEMPLATE		
AREAS		
AREAS CHECKED		
NOTE BOOK NO.		

ORIGINAL SURVEY	BY	DATE
SURVEYED		
PLOTTED		
TEMPLATE		
AREAS		
AREAS CHECKED		
NOTE BOOK NO.		

FILE NAME = X-Sections for Temp X-over 12-13-08.dgn	USER NAME = toroja	DESIGNED - OWR	REVISED - N/A
		DRAWN - OWR	REVISED - N/A
	PLOT SCALE = 20.00 ' / IN.	CHECKED - FML	REVISED - N/A
	PLOT DATE = 12/13/2008	DATE - 11/2008	REVISED - N/A

STATE OF ILLINOIS
DEPARTMENT OF TRANSPORTATION

MAINTENANCE OF TRAFFIC RUNAROUND STAGE 2 CROSS SECTIONS
I-74 OVER TOWNSHIP ROAD 205

SCALE:1"=10'H & 5'V | SHEET NO. -- OF -- SHEETS | STA. 00+00.00 TO STA. 00+00.00

F.A.I. RTE.	SECTION	COUNTY	TOTAL SHEETS	SHEET NO.
74	48(27RS-3)₂ (27HB-5)I. I-1	KNOX	104	87

CONTRACT NO. 68062

FED. ROAD DIST. NO. | ILLINOIS | FED. AID PROJECT

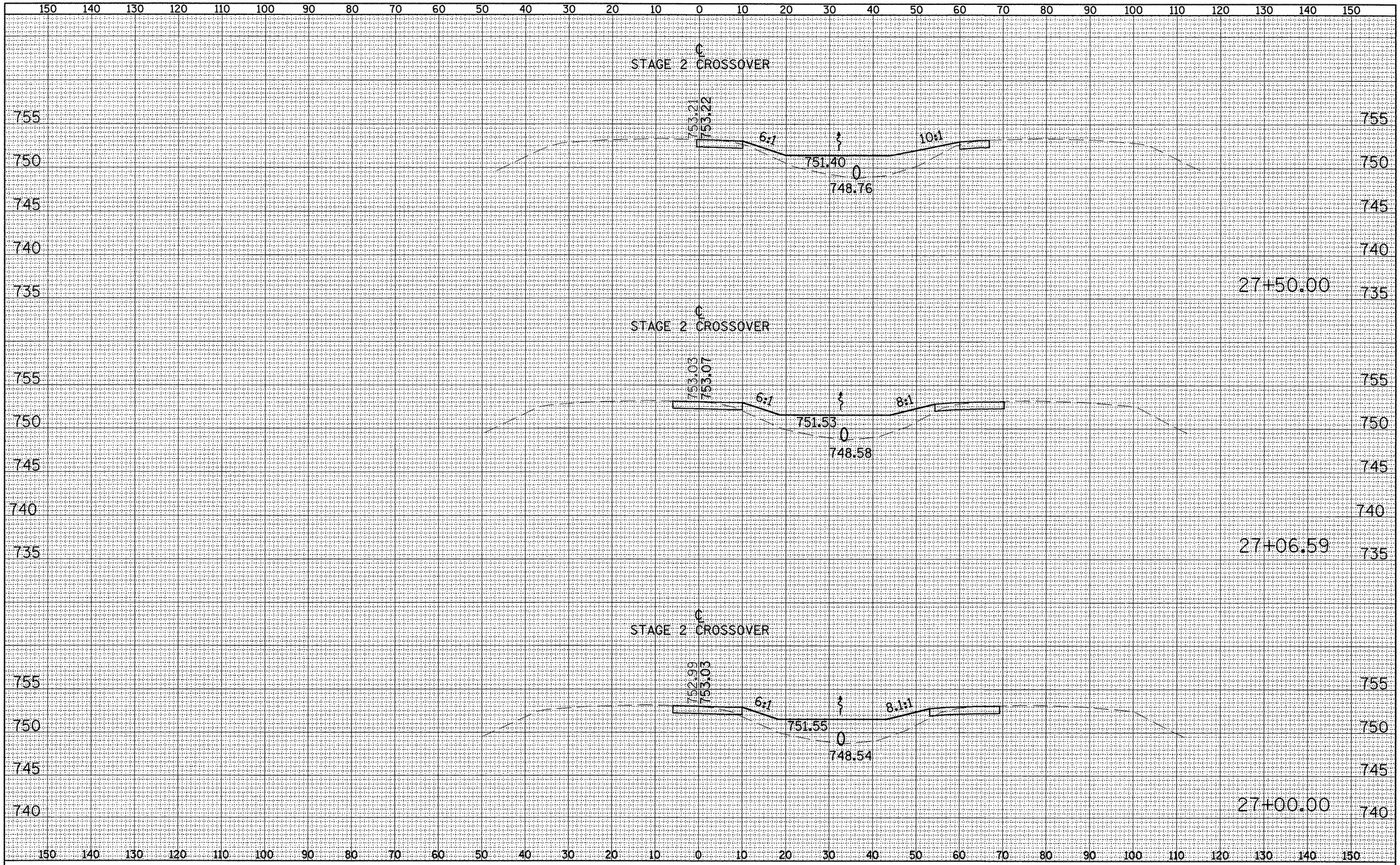

FINAL SURVEY		BY	DATE
NOTE BOOK	SURVEYED		
	PLOTTED		
	TEMPLATE		
NO.	AREAS		
	AREAS CHECKED		

ORIGINAL SURVEY		BY	DATE
NOTE BOOK	SURVEYED		
	PLOTTED		
	TEMPLATE		
NO.	AREAS		
	AREAS CHECKED		

FILE NAME = X-Sections for Temp X-over 12-13-08.dgn	USER NAME = taroja	DESIGNED - OWR	REVISED - N/A
		DRAWN - OWR	REVISED - N/A
	PLOT SCALE = 20.00 ' / IN.	CHECKED - FML	REVISED - N/A
	PLOT DATE = 12/13/2008	DATE - 11/2008	REVISED - N/A

STATE OF ILLINOIS
DEPARTMENT OF TRANSPORTATION

MAINTENANCE OF TRAFFIC RUNAROUND STAGE 2 CROSS SECTIONS
I-74 OVER TOWNSHIP ROAD 205

SCALE:1"=10'H & 5'V | SHEET NO. -- OF -- SHEETS | STA. 00+00.00 TO STA. 00+00.00

F.A.I. RTE.	SECTION	COUNTY	TOTAL SHEETS	SHEET NO.
74	48(27RS-3); (27HB-5)I. I-1	KNOX	104	88
		CONTRACT NO. 68062		
FED. ROAD DIST. NO.	ILLINOIS	FED. AID PROJECT		

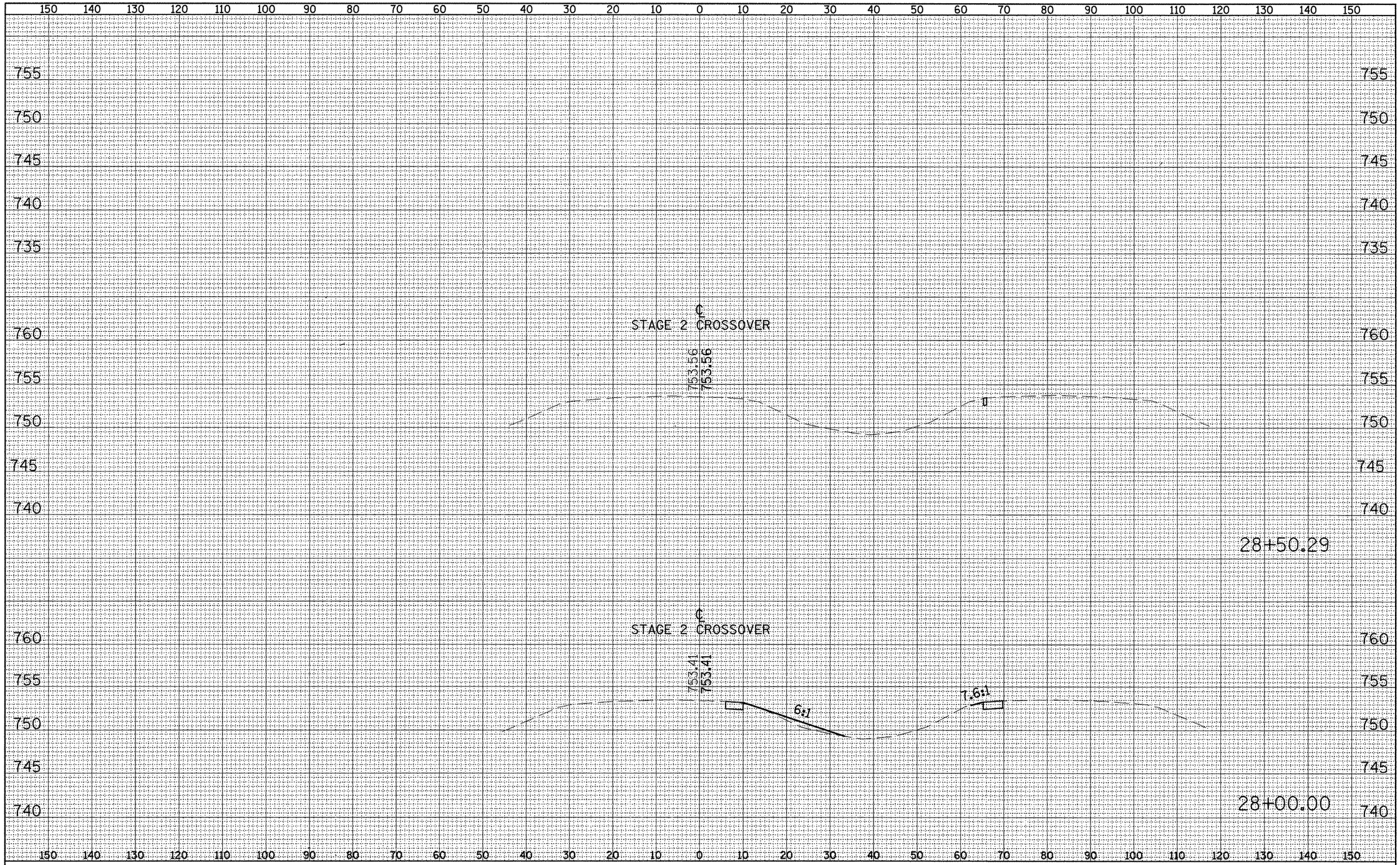

FINAL SURVEY	BY	DATE
SURVEYED		
PLOTTED		
TEMPLATE		
AREAS		
AREAS CHECKED		
NOTE BOOK NO.		

ORIGINAL SURVEY	BY	DATE
SURVEYED		
PLOTTED		
TEMPLATE		
AREAS		
AREAS CHECKED		
NOTE BOOK NO.		

FILE NAME = X-Sectsons for Temp X-over 12-13-08.dgn	USER NAME = toroja	DESIGNED - OWR	REVISED - N/A
		DRAWN - OWR	REVISED - N/A
	PLOT SCALE = 20.00 ' / IN.	CHECKED - FML	REVISED - N/A
	PLOT DATE = 12/13/2008	DATE - 11/2008	REVISED - N/A

STATE OF ILLINOIS
DEPARTMENT OF TRANSPORTATION

MAINTENANCE OF TRAFFIC RUNAROUND STAGE 2 CROSS SECTIONS
I-74 OVER TOWNSHIP ROAD 205

SCALE:1"=10'H & 5'V | SHEET NO. -- OF -- SHEETS | STA. 00+00.00 TO STA. 00+00.00

F.A.I. RTE.	SECTION	COUNTY	TOTAL SHEETS	SHEET NO.
74	48(27RS-3)½ (27HB-5)I. I-1	KNOX	104	89
		CONTRACT NO. 68062		
FED. ROAD DIST. NO.	ILLINOIS	FED. AID PROJECT		

Designer NOTES:
1. Designer to modify this Special Detail sheet, as needed, for inclusion in plans.
2. Include Highway Standard 280001 "TEMPORARY EROSION CONTROL SYSTEM."

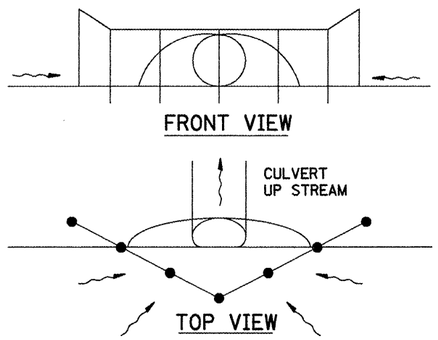

UPSTREAM PIPE CULVERT EROSION CONTROL

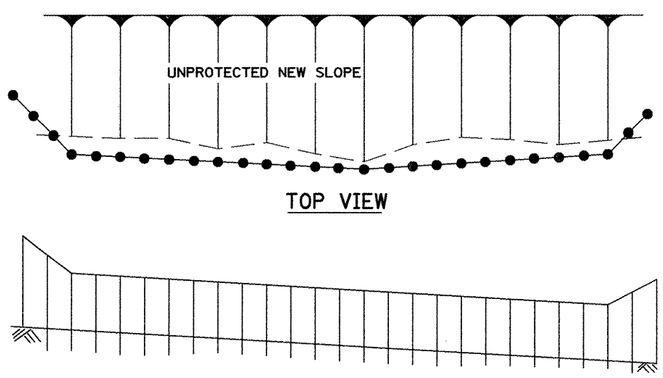

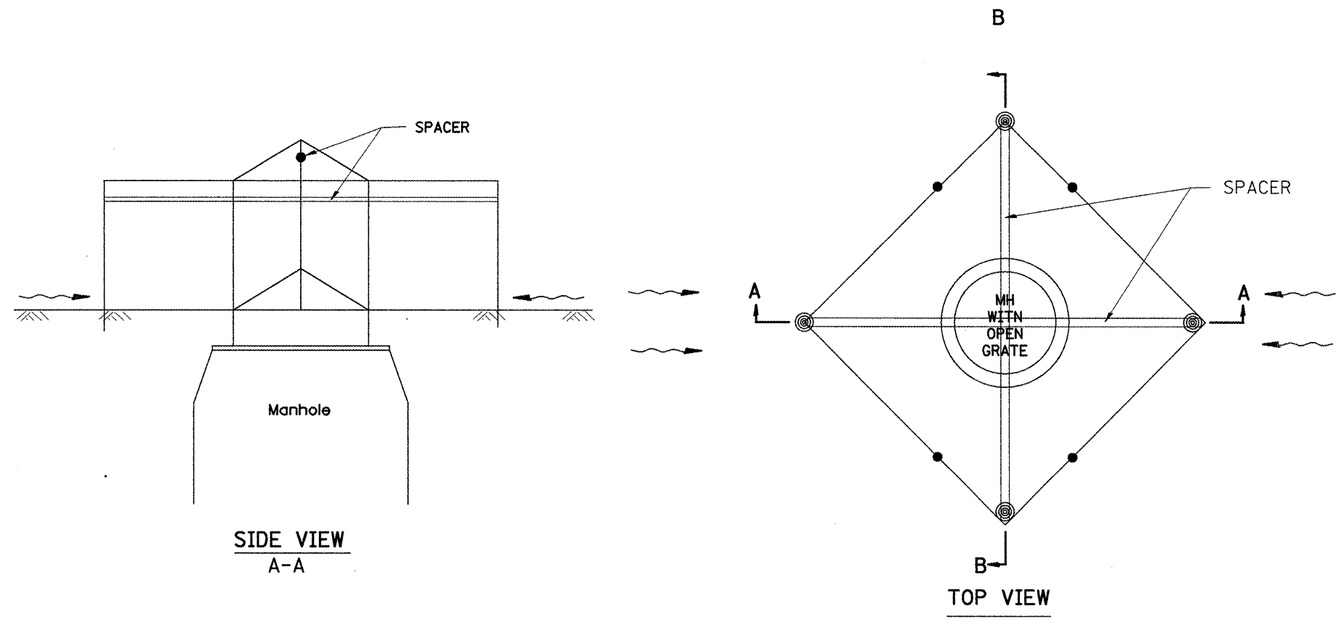

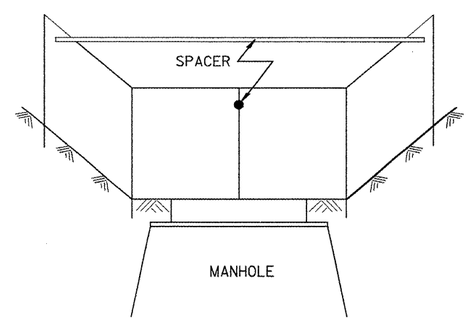

Front View
B-B

EROSION CONTROL
AT
OPEN GRATE MAN HOLE

GENERAL NOTES:

1. This work shall be performed in accordance with Sections 280 & 1081, of the Standard Specifications.
2. Additional Timber or Metal Post shall be installed, as needed.

All dimensions are in inches (millimeters) unless otherwise noted.

1-1-97		T.P.
3-11-03	ELIMINATED SILT FENCE DITCH CHECK	M.A.

STATE OF ILLINOIS
DEPARTMENT OF TRANSPORTATION

TYPICAL APPLICATION OF SILT FILTER FENCE

NOT TO SCALE

CADD STD. 280001-D4

F.A.I. RTE.	SECTION	COUNTY	TOTAL SHEETS	SHEET NO.
74	48(27RS-3; (27HB-5)I, I-1)	KNOX	104	90
		CONTRACT NO. 68062		

FED. ROAD DIST. NO. | ILLINOIS | FED. AID PROJECT

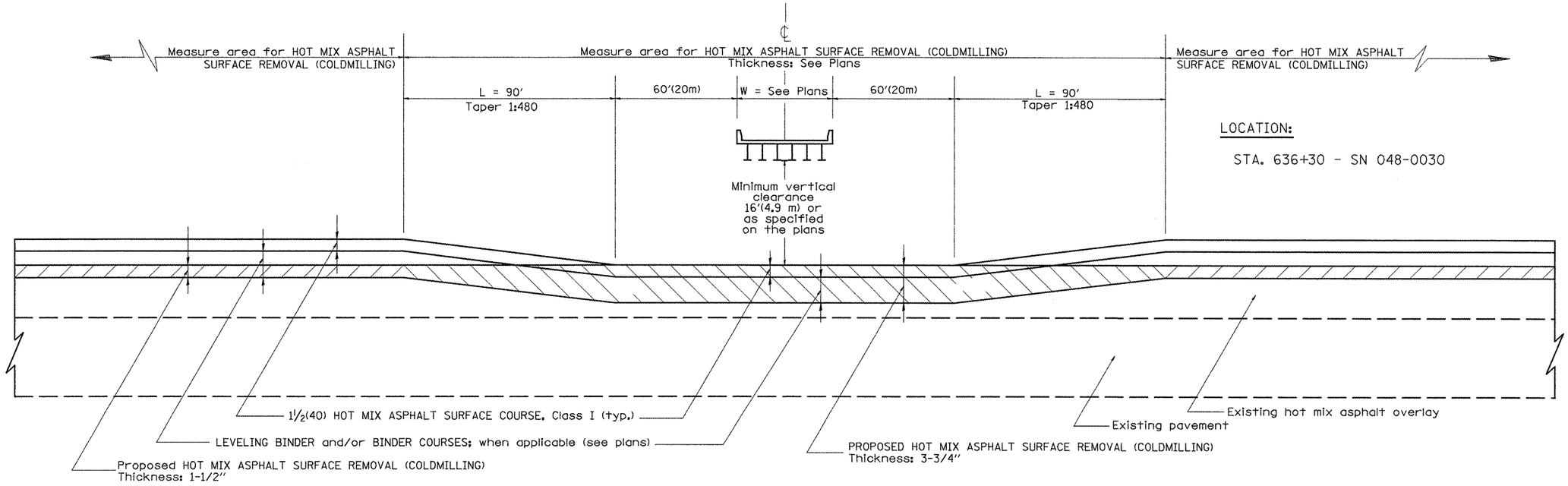

LOCATION:

STA. 636+30 - SN 048-0030

CASE 1: WITH HOT MIX ASPHALT SURFACE REMOVAL (COLD MILLING)

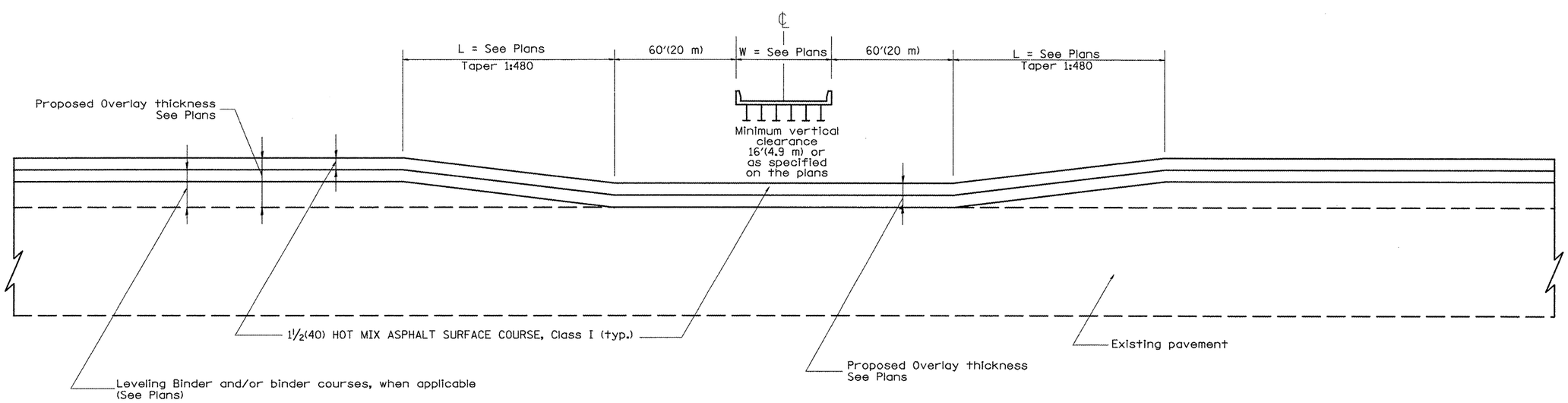

CASE 2: NO HOT MIX ASPHALT SURFACE REMOVAL (COLD MILLING)

DESIGNER NOTES:
1. THIS TREATMENT SHOULD ONLY BE USED WHERE NECESSARY TO MAINTAIN MINIMUM VERTICAL CLEARANCE. THE PREFERRED TREATMENT IS FULL DEPTH OVERLAY. CHECK WITH YOUR PROJECT ENGINEER PRIOR TO USING.
2. INCLUDE DISTRICT SPECIAL PROVISION FOR HOT MIX ASPHALT SURFACE REMOVAL (COLD MILLING).

All dimensions are in inches (millimeters) unless otherwise noted.

01-01-97	RENUM. C-23.03, NEW REVISION BOX	T.P.
10-16-06	REVISED TO 2007 SPEC.	M.A.

STATE OF ILLINOIS
DEPARTMENT OF TRANSPORTATION

PAVEMENT OVERLAY UNDER STRUCTURES
SPECIAL TREATMENT

NOT TO SCALE

CADD STD. 406001-D4

F.A.I. RTE.	SECTION	COUNTY	TOTAL SHEETS	SHEET NO.
74	48(27RS-3; (27HB-5)I, I-1)	KNOX	104	91
		CONTRACT NO. 68062		
FED. ROAD DIST. NO.	ILLINOIS	FED. AID PROJECT		

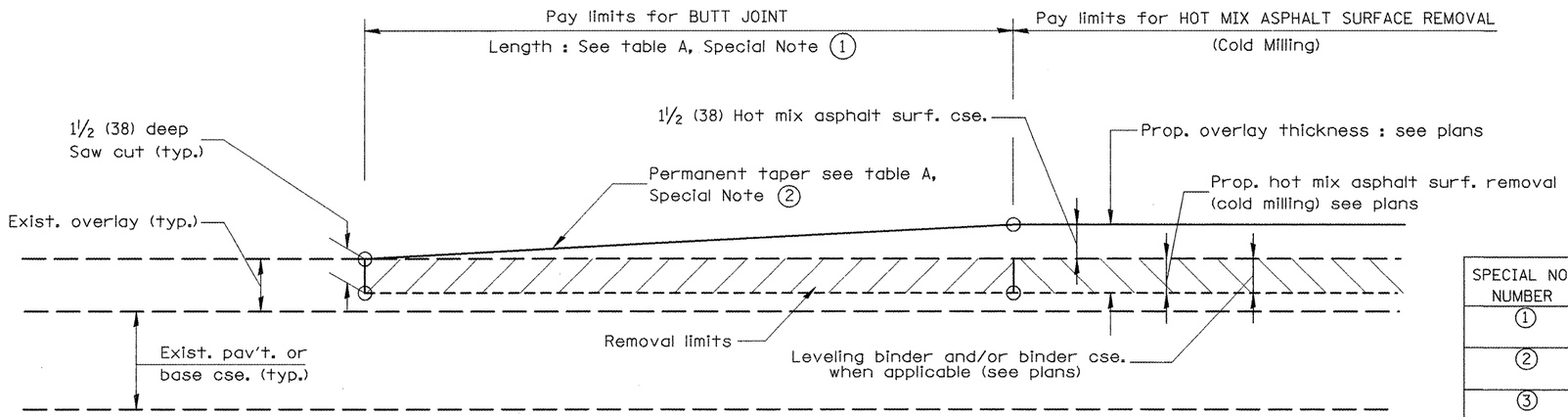

CASE 1 : WITH HOT MIX ASPHALT SURFACE REMOVAL (COLD MILLING)

TABLE A

(LENGTHS AND TAPER RATES)

SPECIAL NOTE NUMBER	ELEMENT	MAINLINE INTERSTATES & 4-LANE EXPRESSWAYS	ALL OTHERS
1	LENGTH OF BUTT JOINT	60'(18.0 m)	30'(9.0 m)
2	PERMANENT TAPER RATE	1:480	1:240
3	TEMPORARY RAMP TAPER RATE	1:80	1:40
4	TEMPORARY RAMP LENGTH	10'(3.0 m)	5'(1.5 m)
5	LENGTH OF BUTT JOINT	10'(3.0 m)	10'(3.0 m)

GENERAL NOTES

1. The work shall be done in accordance with Article 406.08 and the Special Provision for Butt Joints.
2. The pavement surface to be removed may be either bituminous or P.C. concrete. The work shall be performed in accordance with Article 440.04 and the Special Provisions for Butt Joints.
3. The saw cut joints shall be primed just prior to the placing of bituminous material. The work will be in accordance with the applicable portions of Article 406.05.

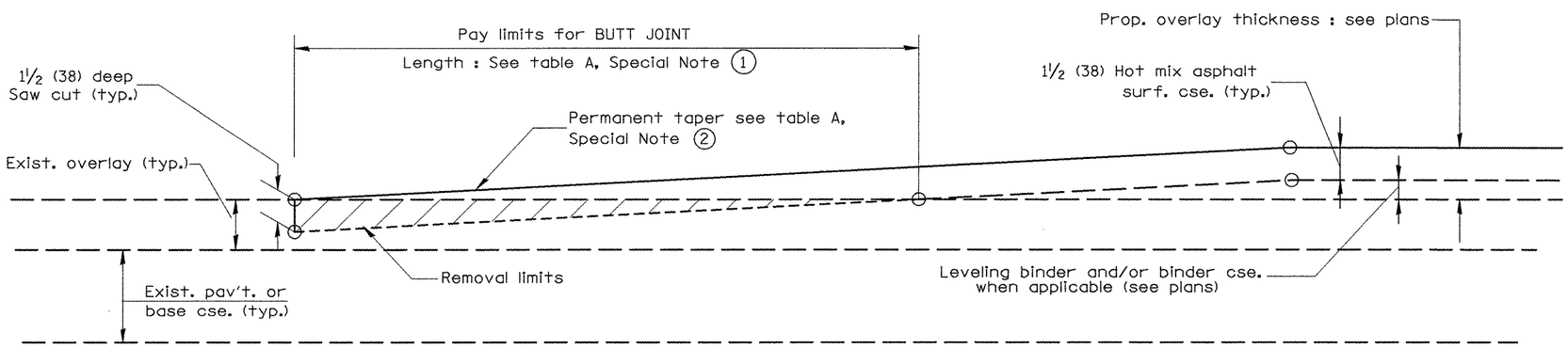

CASE 2 : NO HOT MIX ASHALT SURFACE REMOVAL (COLD MILLING)

All dimensions are in inches (millimeters) unless otherwise noted.

DESIGNER NOTES:
1. Include District Special Provision for Butt Joints & for Hot Mix Asphalt Removal (Cold Milling).
2. The butt joints pay item includes the saw cut & temporary ramp. Payment for the Butt Joint applies whether or not the project features Hot Mix Asphalt Removal (Cold Milling).

01-01-97	RENUM. C-23.01, NEW REVISION BOX	T.P.
04-01-97	CORRECTION TO DEPTH	J.A.
09-15-05	REVISED DESIGNER NOTE	M.M.A.
10-16-06	REVISED TO 2007 SPEC.	M.A.

STATE OF ILLINOIS
DEPARTMENT OF TRANSPORTATION

BUTT JOINTS

NOT TO SCALE

SHT. 1 OF 3
CADD STD. 406101-D4

F.A.I. RTE.	SECTION	COUNTY	TOTAL SHEETS	SHEET NO.
74	48(27RS-3; (27HB-5)I, I-1)	KNOX	104	92

CONTRACT NO. 68062

FED. ROAD DIST. NO. | ILLINOIS | FED. AID PROJECT

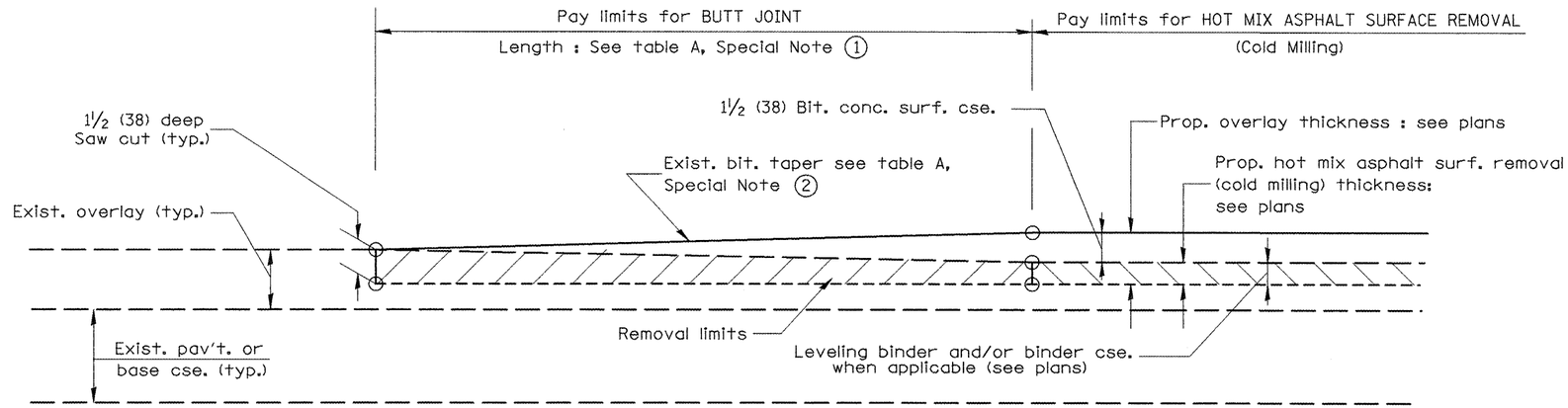

CASE 3 : WITH HOT MIX ASPHALT SURFACE REMOVAL (COLD MILLING)
TIE-IN TO EXISTING BITUMINOUS TAPER

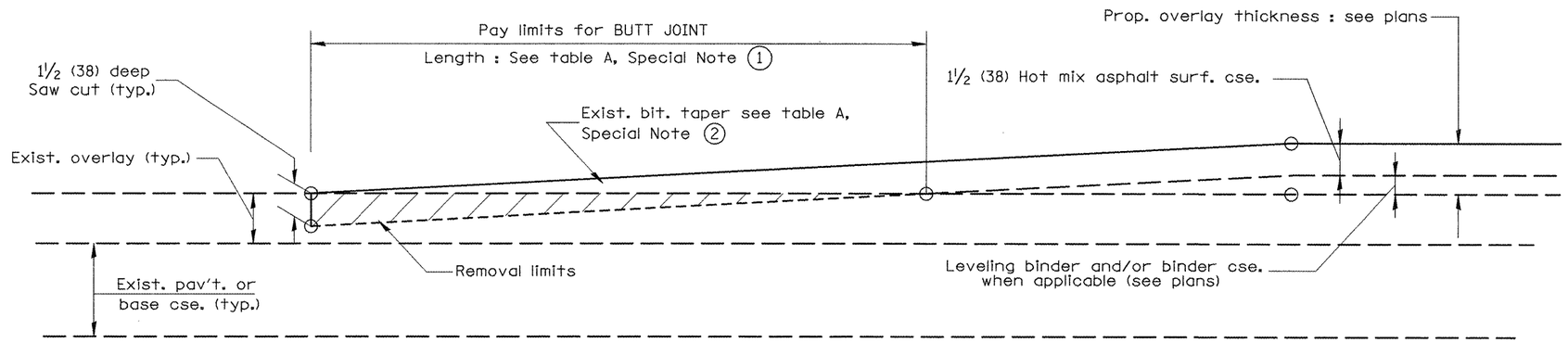

CASE 4 : NO HOT MIX ASPHALT SURFACE REMOVAL (COLD MILLING)
TIE-IN TO EXISTING BITUMINOUS TAPER

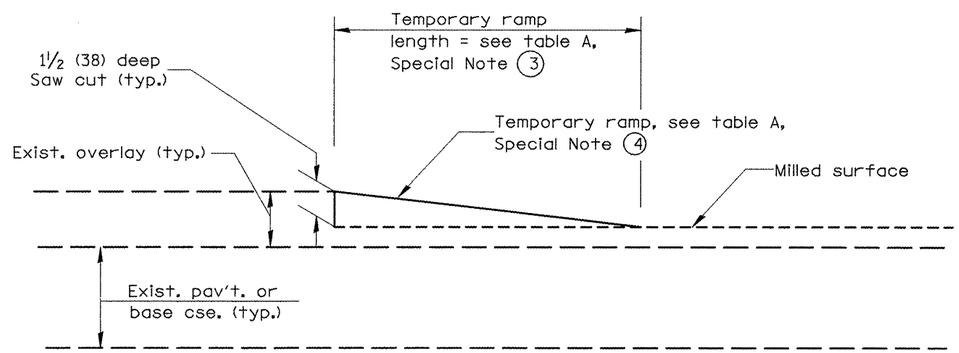

DETAIL TEMPORARY RAMP

All dimensions are in inches (millimeters) unless otherwise noted.

STATE OF ILLINOIS
DEPARTMENT OF TRANSPORTATION

NOT TO SCALE

BUTT JOINTS

SHT. 2 OF 3
CADD STD. 406101-D4

F.A.I. RTE.	SECTION	COUNTY	TOTAL SHEETS	SHEET NO.
74	48(27RS-3; (27HB-5)I, I-1)	KNOX	104	93
		CONTRACT NO. 68062		
FED. ROAD DIST. NO.	ILLINOIS	FED. AID PROJECT		

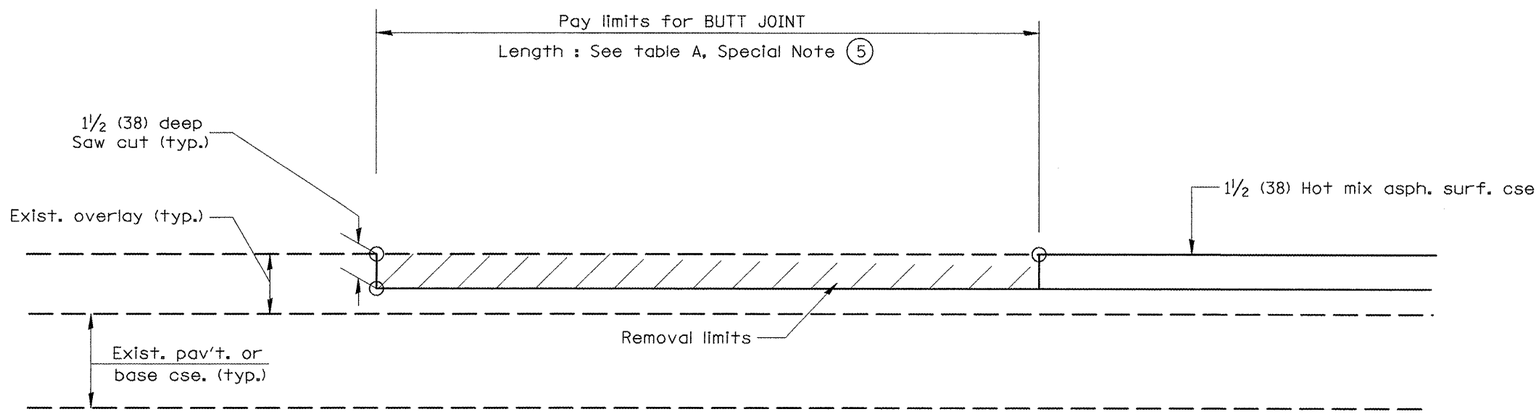

CASE 5 : WITH HOT MIX ASPHALT SURFACE REMOVAL (COLD MILLING)

TIE-IN TO EXISTING BITUMINOUS TAPER

All dimensions are in inches (millimeters) unless otherwise noted.

					STATE OF ILLINOIS DEPARTMENT OF TRANSPORTATION	BUTT JOINTS	F.A.I. RTE.	SECTION	COUNTY	TOTAL SHEETS	SHEET NO.
							74	48(27RS-3; (27HB-5)I, I-1)	KNOX	104	94
						NOT TO SCALE SHT. 3 OF 3 CADD STD. 406101-D4	CONTRACT NO. 68062				
							FED. ROAD DIST. NO.	ILLINOIS	FED. AID PROJECT		

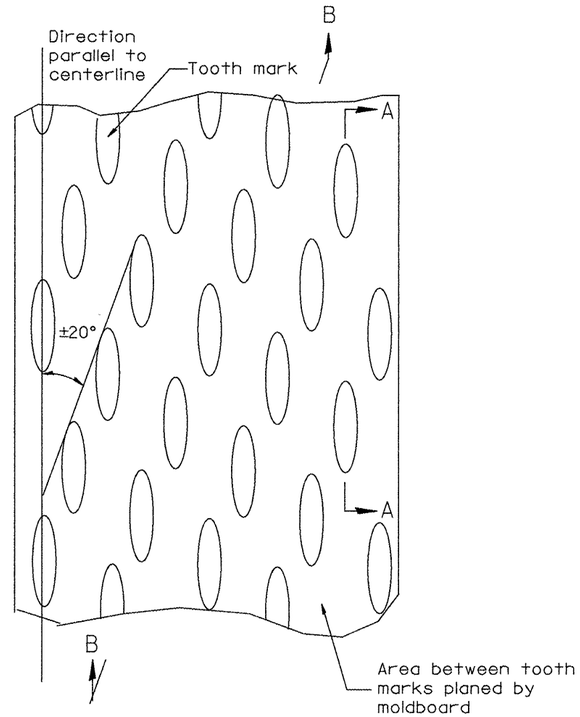

PLAN

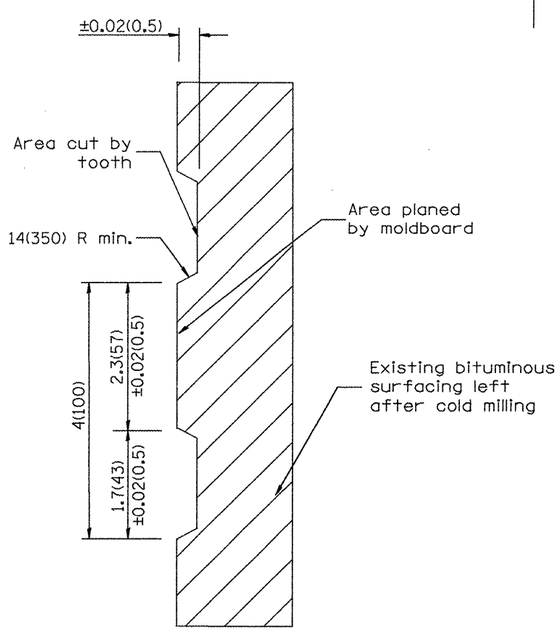

SECTION A-A

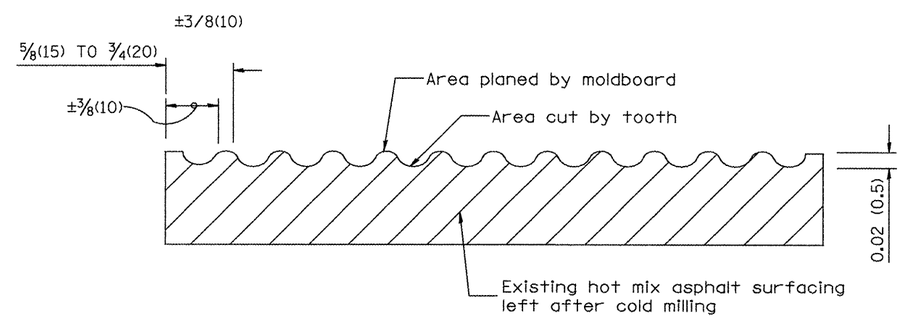

SECTION B-B PROJECTED
PERPENDICULAR TO CENTERLINE

General notes:

1. Coldmilling shall consist of two processes: Cutting with carbide teeth mounted on a rotating drum, and planing with a moldboard mounted immediately behind the cutting drum.
2. Other similar patterns will be acceptable if they consist of a smooth, flat, planed surface interspersed with a pattern of discontinuous longitudinal striations.

DESIGNER NOTES:
1. INCLUDE DISTRICT SPECIAL PROVISION, IF APPLICABLE.

All dimensions are in inches (millimeters) unless otherwise noted.

01-01-97	RENUM. C-104.01. NEW REVISION BOX	T.P.
04-20-98	REMOVED MILLING DETAIL FROM STANDARD	J.A.
09-08-98	CORRECT NOTE LEADER PLACEMENT	R.W.
10-16-06	REVISED TO 2007 SPEC.	M.A.

STATE OF ILLINOIS
DEPARTMENT OF TRANSPORTATION

HOT MIX ASPHALT SURFACE REMOVAL (COLD MILLING)

NOT TO SCALE — CADD STD. 440001-D4

F.A.I. RTE.	SECTION	COUNTY	TOTAL SHEETS	SHEET NO.
74	48(27RS-3; (27HB-5)I, I-1)	KNOX	104	95
		CONTRACT NO. 68062		

FED. ROAD DIST. NO. | ILLINOIS | FED. AID PROJECT

1. Use EROSION CONTROL CURB at guardrail installations where grades are equal to or greater than 1% and at inlets. [Include District Special Provision]
2. Use GUARDRAIL AGGREGATE EROSION CONTROL at guardrail installations where grades are less than 1% [Include District Special Provision]
3. Include State Standards 609001, 609006 or 610001 if applicable.
4. Include the following District Cadd Standards as needed: Slope Drains for Exposed Pipes; Slope Drains for Buried Pipes; Seepage Collars for Exposed Pipes; Concrete Thrust Blocks and Pipe Elbow.
5. Include District Special Provision -"Aggregate Quality" for projects located in the Western Area of the District - approx. dividing line is IL 97.

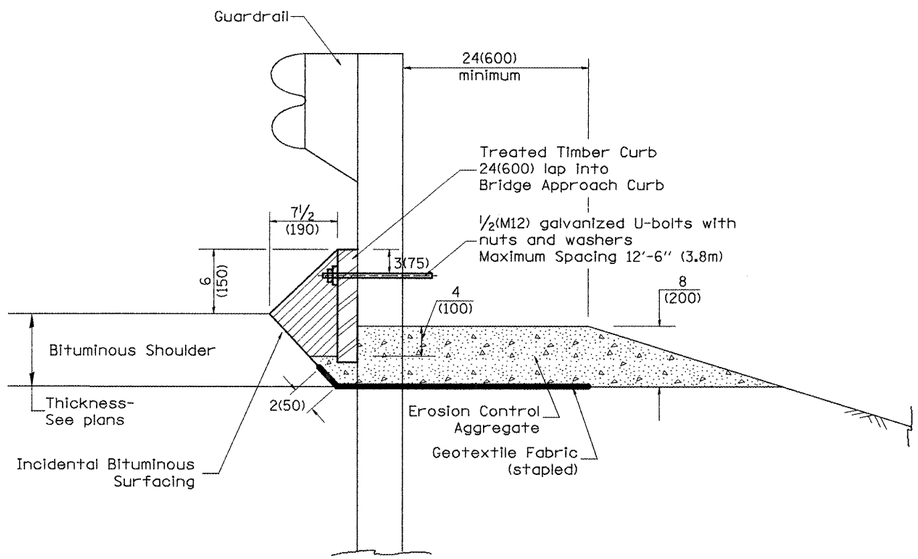

TYPICAL SECTION WITH EROSION CONTROL CURB

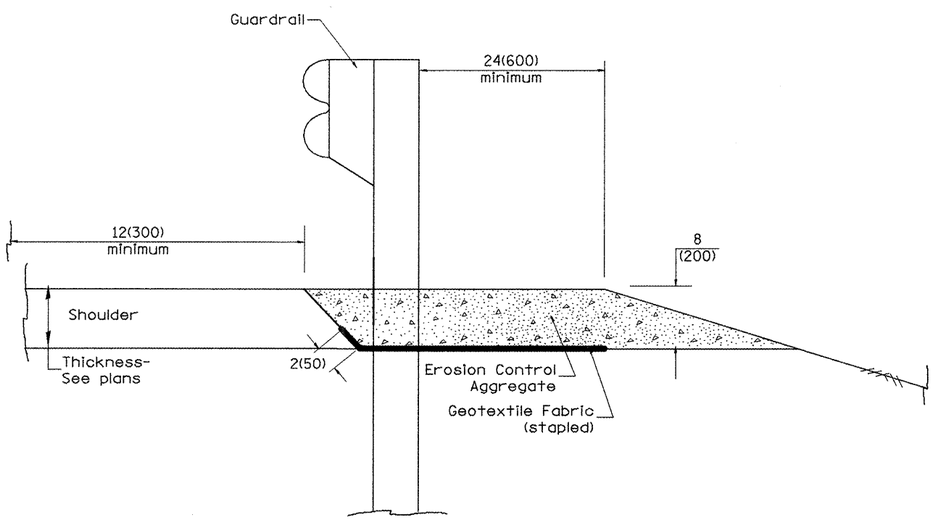

TYPICAL SECTION WITHOUT EROSION CONTROL CURB

GENERAL NOTES: EROSION CONTROL CURB

1. This work shall consist of grading as needed, installing hardware and treated timber boards, furnishing and placing mastic material and incidental bituminous surfacing in front of Steel Plate Beam Guardrail in accordance with Plan Details.

2. Timber shall be treated in accordance with Article 1007.12. All preservatives specified in the article will be allowed. Waterborne preservatives "asa" and "cca" shall have a minimum retention of 0.40 lbs./cu. ft. (6.4 kg/m³)

GENERAL NOTES: GUARDRAIL AGGREGATE EROSION CONTROL

1. This work shall consist of grading as needed, furnishing and installing geotextile fabric and staples, and furnishing, placing and shaping crushed aggregate around and behind Steel Plate Beam Guardrail posts in accordance with Plan Details.

2. Before placing the aggregate and the Geotextile Fabric, weeds and grass shall be removed from the area to be covered.

3. After the area has been prepared, and in a dry condition, the Geotextile fabric shall be placed with a 12(300) minimum overlap. A knife cut for guardrail post installation is necessary.

4. The aggregate shall be deposited, compacted and shaped by either mechanical or hand methods, in a manner reasonably true to line and grade.

5. The Contractor shall have the option of placing the guardrail before or after the Geotextile Fabric and Aggregate are in place. If the guardrail is placed after the Geotextile Fabric and Aggregate, then any voids must be filled and the aggregate returned to line and grade.

6. Materials shall meet the following requirements:

A. The crushed aggregate shall be CA1 gradation in accordance with Article 1004.01(c) of the Standard Specifications.

B. The Geotextile Fabric shall be nonwoven fabric in accordance with Article 1080.02 of the Standard Specifications.

All dimensions are in inches (millimeters) unless otherwise noted.

01-01-97	RENUM. C-22.01, NEW REVISION BOX	T.P.
03-01-97	CORRECT STD. NUMBERS IN NOTES PG. 2	J.A.
11-03-00	CORRECTION TO NOTES	M.A.
10-16-06	REVISED TO 2007 SPEC.	M.A.

STATE OF ILLINOIS
DEPARTMENT OF TRANSPORTATION

GUARDRAIL EROSION CONTROL TREATMENTS

NOT TO SCALE

SHT. 1 OF 2
CADD STD. 630101-D4

F.A.I. RTE.	SECTION	COUNTY	TOTAL SHEETS	SHEET NO.
74	48(27RS-3; (27HB-5)I, I-1)	KNOX	104	96
		CONTRACT NO. 68062		

FED. ROAD DIST. NO. | ILLINOIS | FED. AID PROJECT

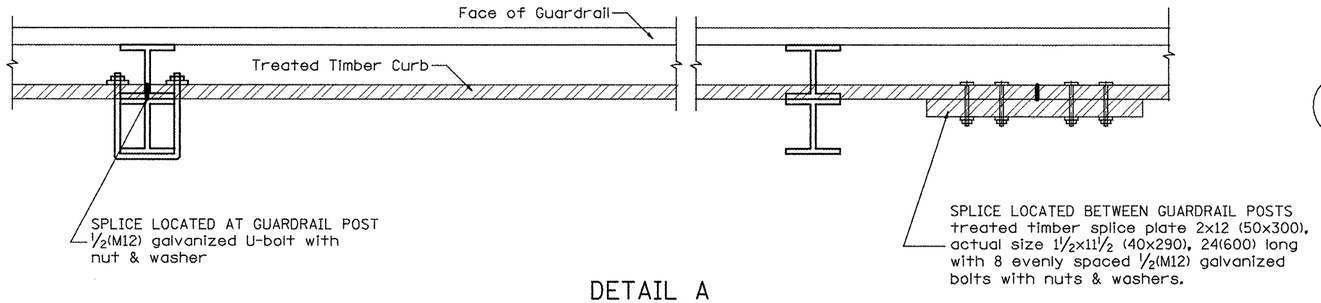

DETAIL A

(Typical Treated Timber Splices)

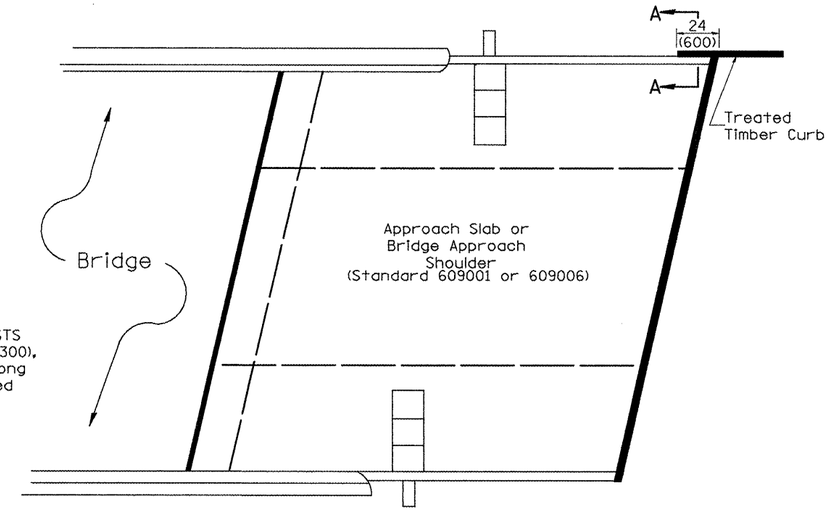

PLAN VIEW

APPROACH SLAB OR BRIDGE APPROACH SHOULDER
(STANDARD 609001 or 609006)

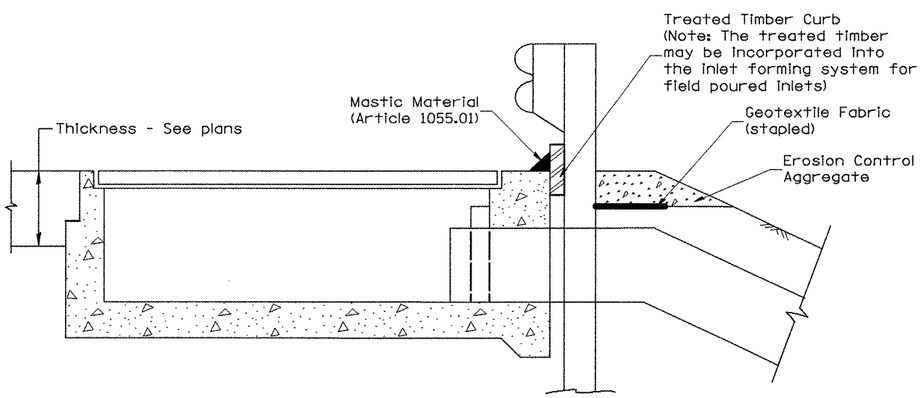

TYPICAL SECTION WITH EROSION CONTROL CURB
AT INLETS TYPE E & F (STANDARD 610001)

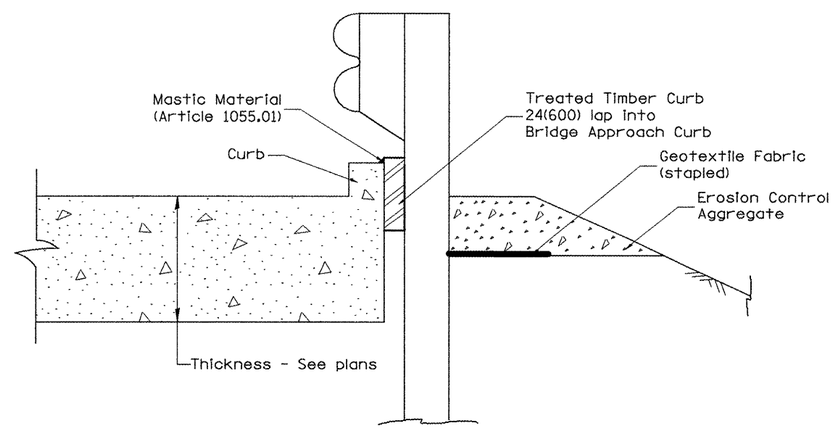

SECTION A-A

TYPICAL SECTION WITH EROSION CONTROL CURB
AT BRIDGE APPROACH CURB
(STANDARD 609001 OR 609006)

All dimensions are in inches (millimeters)
unless otherwise noted.

STATE OF ILLINOIS
DEPARTMENT OF TRANSPORTATION

GUARDRAIL EROSION CONTROL TREATMENTS

NOT TO SCALE

SHT. 2 OF 2
CADD STD. 630101-D4

F.A.I. RTE.	SECTION	COUNTY	TOTAL SHEETS	SHEET NO.
74	48(27RS-3; (27HB-5)I, I-1)	KNOX	104	97
		CONTRACT NO. 68062		
FED. ROAD DIST. NO.	ILLINOIS	FED. AID PROJECT		

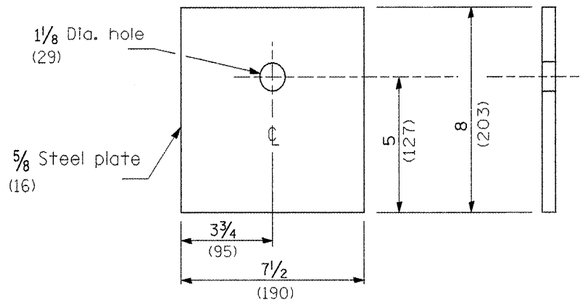

BEARING PLATE K

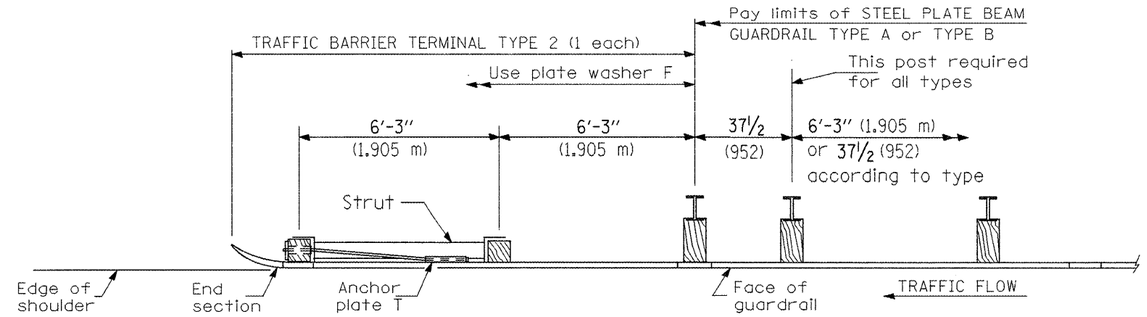

PLAN

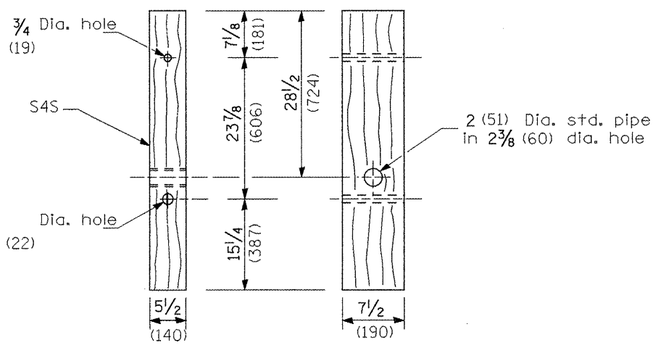

WOOD POST

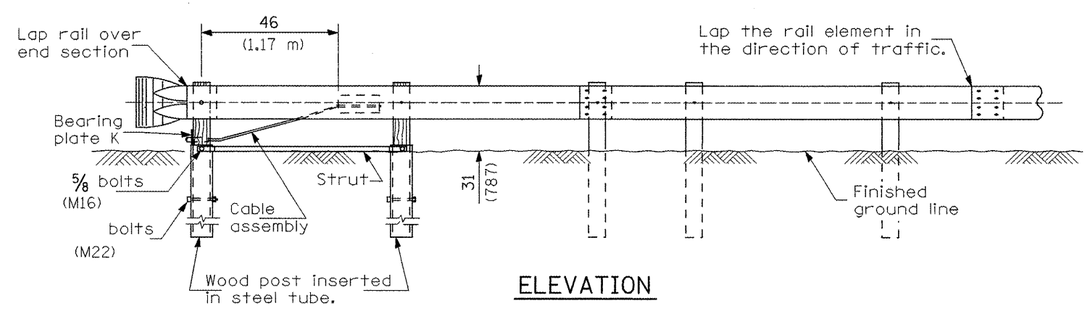

ELEVATION

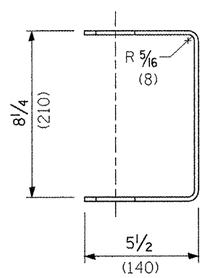

YOKE

3/16 (5) thick steel

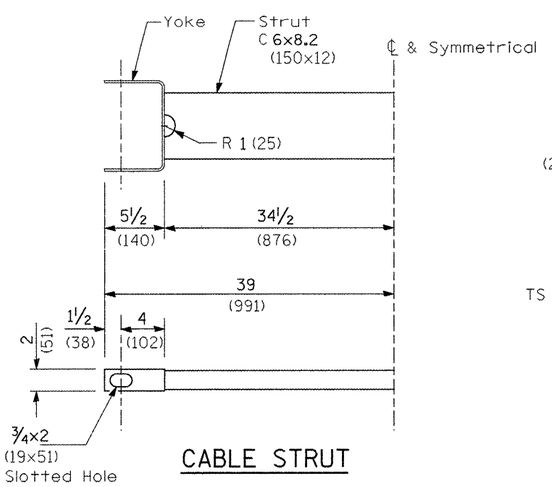

CABLE STRUT

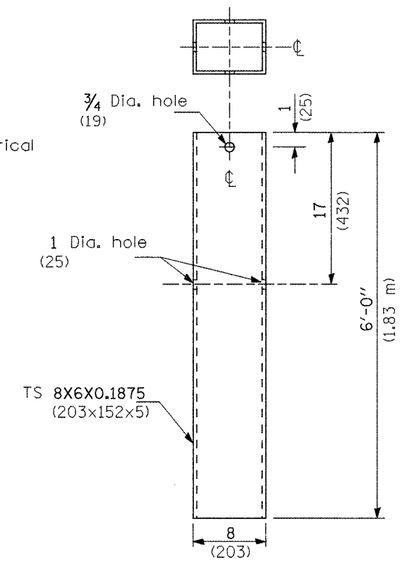

STEEL TUBE

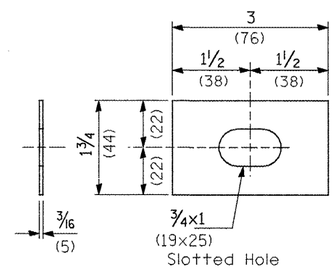

PLATE WASHER F

GENERAL NOTES

See Standard 630001 for details of guardrail not shown.

The bearing plate K shall be held in position by (2) two eight penny nails driven into the post and bent over the top of the plate.

All dimensions are in inches (millimeters) unless otherwise noted.

DESIGNER NOTES: This CADD Standard was created because the State Standard was not corrected to show the proper height (31") for new installations.
1. Use this CADD Standard for new guardrail installations requiring a Type 2 end section.
2. Use the State Standard 631011 when removing and re-erecting existing guardrail.
3. Delete this CADD Standard when State Standard 631011 is corrected and reissued

03-01-07	NEW DETAIL	RJD

STATE OF ILLINOIS
DEPARTMENT OF TRANSPORTATION

TRAFFIC BARRIER TERMINAL, TYPE 2

NOT TO SCALE

CADD STD. 631011-D4

F.A.I. RTE.	SECTION	COUNTY	TOTAL SHEETS	SHEET NO.
74	48(27RS-3; (27HB-5)I, I-1)	KNOX	104	98
		CONTRACT NO. 68062		
FED. ROAD DIST. NO.	ILLINOIS	FED. AID PROJECT		

DESIGNER NOTES:

1. INCLUDE APPROPRIATE SPECIAL PROVISIONS FOR "GUARD RAIL DELINEATION POLICY: 1. FROM INTERIM SPECIAL PROVISIONS 94-74; "GUARDRAIL AND BARRIER WALL DELINEATION."
2. IF POST MOUNT TERMINAL MARKER IS USED, INCLUDE STATE STD. 720011.

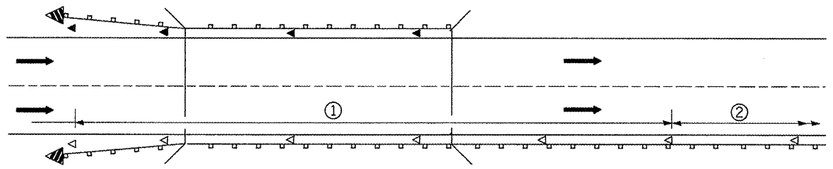

① Spacing 80 ft. (24 m) max. for first 400 ft. (122 m) or curve spacing shown in Standard 635001, whichever is less (min. 4 reflectors regardless of length).

② After 400 ft. (122 m), transition to normal delineator spacing shown in Standard 635001, and continue as required.

ONE-WAY TRAFFIC

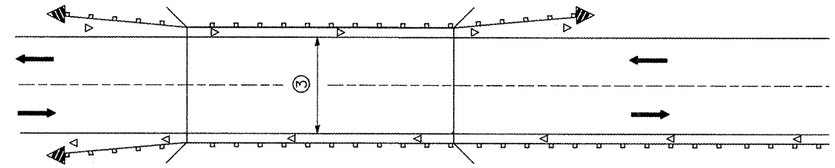

③ Bidirectional silver/silver should be used in lieu of monodirectional silver on both sides of two-lane bridges where the bridge pavement is less than 24 (610) wider than the pavement approaching the bridge.

TWO-WAY TRAFFIC

GUARDRAIL / BARRIER WALL / BRIDGE RAIL REFLECTORS

LEGEND

◁ Monodirectional silver

◀ Monodirectional amber

Terminal Marker - Black/Yellow Left or Right as appropriate

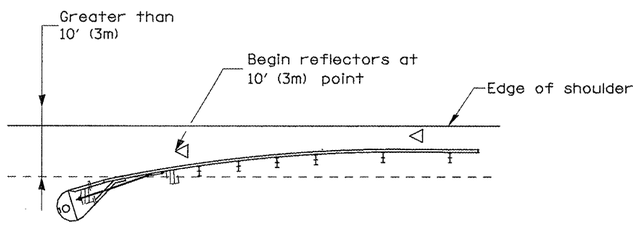

NOTE: Omit terminal marker when terminal over 10′ (3m) from edge of paved shoulder or break point of unpaved shoulder, or when terminal buried in backslope.

Traffic Barrier Terminal Type(*) and/or Turned-Down Terminal

[Terminal over 10′ (3m) from edge of shoulder]
*See Plans for Type

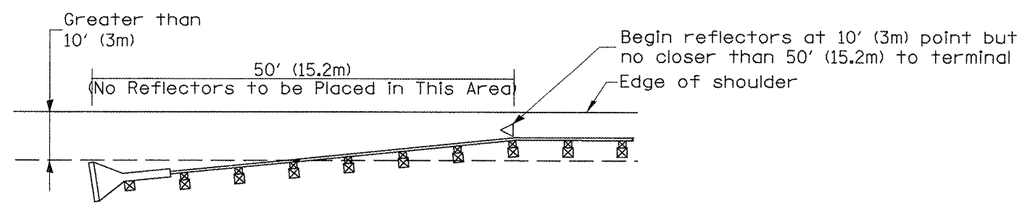

NOTE: Omit terminal marker when terminal over (10′) from edge of paved shoulder or break point of unpaved shoulder.

Traffic Barrier Terminal Type 1 (Special)

[Terminal over 10′ (3m) from edge of shoulder]

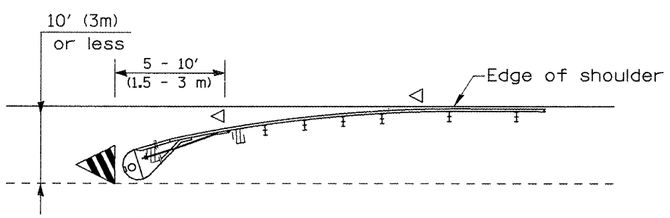

Traffic Barrier Terminal Type(*) and/or Turned-Down Terminal

[Terminal over 10′ (3m) or less from edge of shoulder]
*See Plans for Type

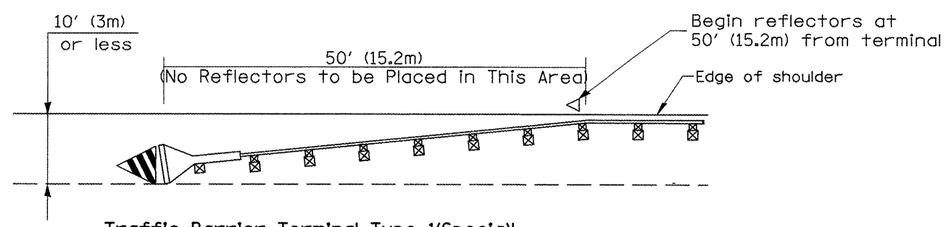

Traffic Barrier Terminal Type 1(Special)

[Terminal 10′ (3m) or less from edge of shoulder]

TERMINAL MARKER PLACEMENT

All dimensions are in inches (millimeters) unless otherwise noted.

01-01-97	RENUM. E-10.02, NEW REVISION BOX	T.P.
03-01-97	CORRECT STD. SPEC. *	J.A.
10-16-06	REVISED TO 2007 SPEC.	M.A.

STATE OF ILLINOIS
DEPARTMENT OF TRANSPORTATION

GUARDRAIL AND BARRIER WALL DELINEATION

NOT TO SCALE

SHT. 1 OF 3
CADD STD. 635101-D4

F.A.I. RTE.	SECTION	COUNTY	TOTAL SHEETS	SHEET NO.
74	48(27RS-3; (27HB-5)I, I-1)	KNOX	104	99
		CONTRACT NO. 68062		
FED. ROAD DIST. NO.	ILLINOIS	FED. AID PROJECT		

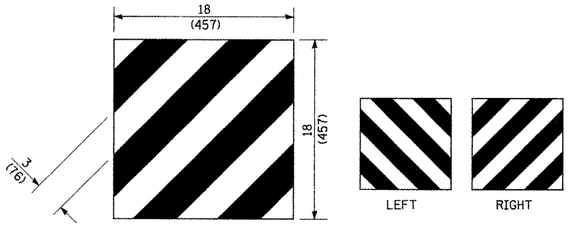

For Traffic Barrier Terminal Type 1 (Special)

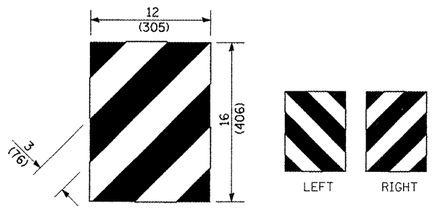

For Traffic Barrier Terminal Type (*)
and Post Mount
* See Plans for Type

TERMINAL MARKER DETAILS

Color: Black / Yellow reflectorized

OM - I100 (L or R) Direct applied reflective sheeting

OM - I200 (L or R) Post mounted

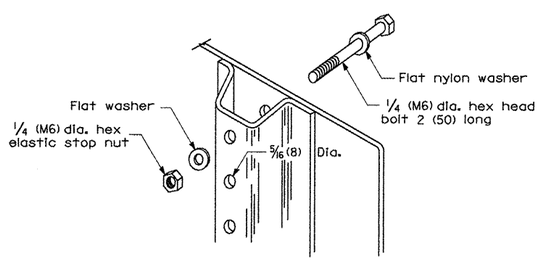

DETAIL OF MOUNTING TERMINAL MARKER TO POST

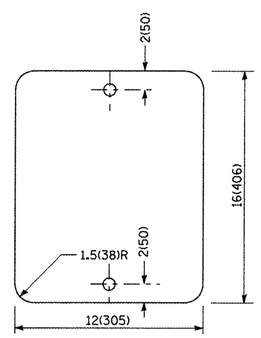

STANDARD TERMINAL MARKER

POST MOUNTED TERMINAL MARKER ASSEMBLY

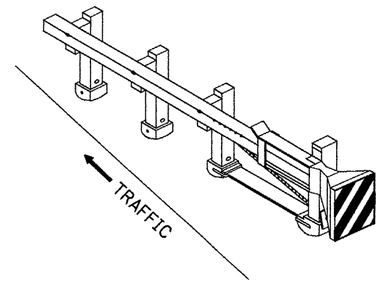

Standard Treatment - Direct Applied Sheeting
Traffic Barrier Terminal Type 1 (Special)

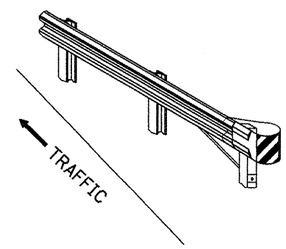

Standard Treatment - Direct Applied Sheeting
Traffic Barrier Terminal Type (*)
* See Plans for Type

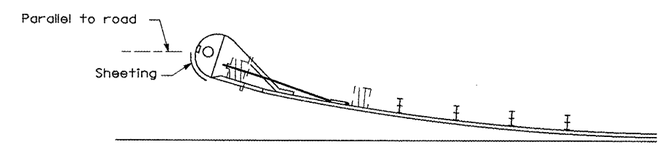

Sheeting Position for
Traffic Barrier Terminal Type (*)
* See Plans for Type

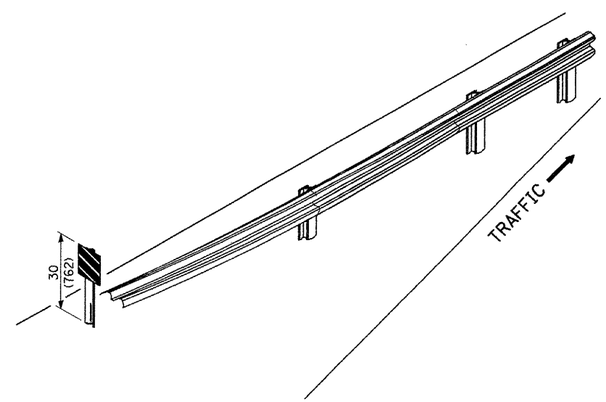

ALTERNATE TREATMENT - POST MOUNTED
(For turned-down terminal where sheeting cannot be direct applied)

TERMINAL MARKER TREATMENTS

GENERAL NOTES

All dimensions are in inches (millimeters) unless otherwise noted.

STATE OF ILLINOIS
DEPARTMENT OF TRANSPORTATION

GUARDRAIL AND BARRIER WALL DELINEATION

NOT TO SCALE

SHT. 2 OF 3
CADD STD. 635101-D4

F.A.I. RTE.	SECTION	COUNTY	TOTAL SHEETS	SHEET NO.
74	48(27RS-3; (27HB-5)I, I-1)	KNOX	104	100
		CONTRACT NO. 68062		
FED. ROAD DIST. NO.	ILLINOIS	FED. AID PROJECT		

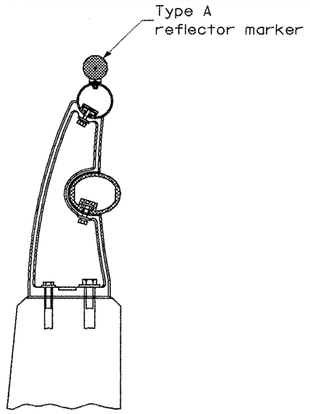

TYPICAL MOUNTING DETAIL
FOR BRIDGE RAIL REFLECTOR

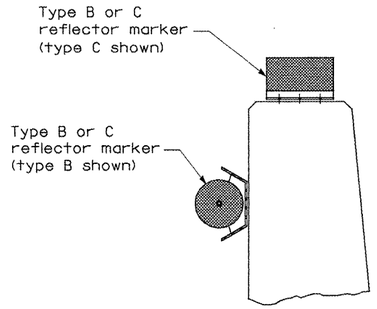

TYPICAL MOUNTING DETAIL
FOR BARRIER WALL REFLECTOR

REFLECTOR MOUNTING

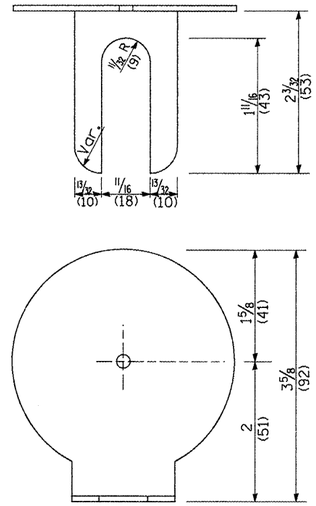

REFLECTOR MARKER TYPE A

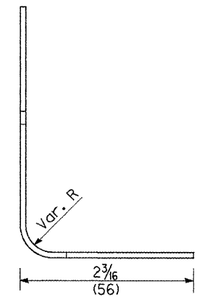

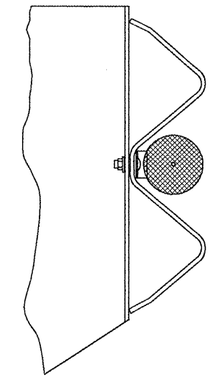

TYPICAL GUARDRAIL MOUNTING WITH
REFLECTOR MARKER TYPE A

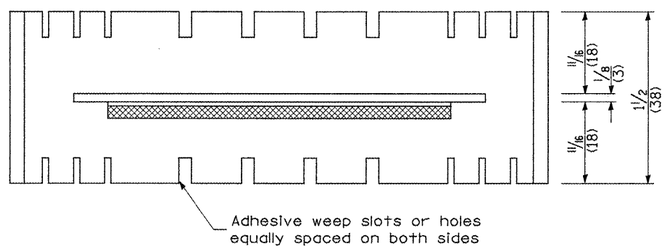

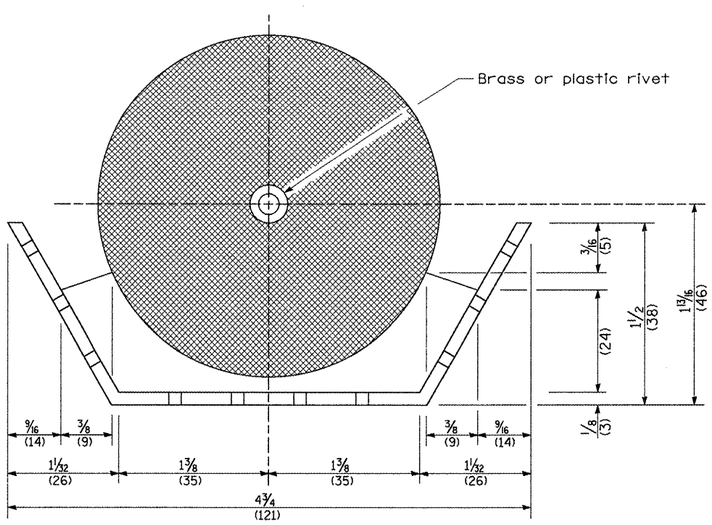

REFLECTOR MARKER TYPE B

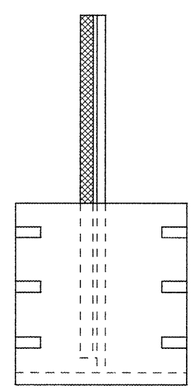

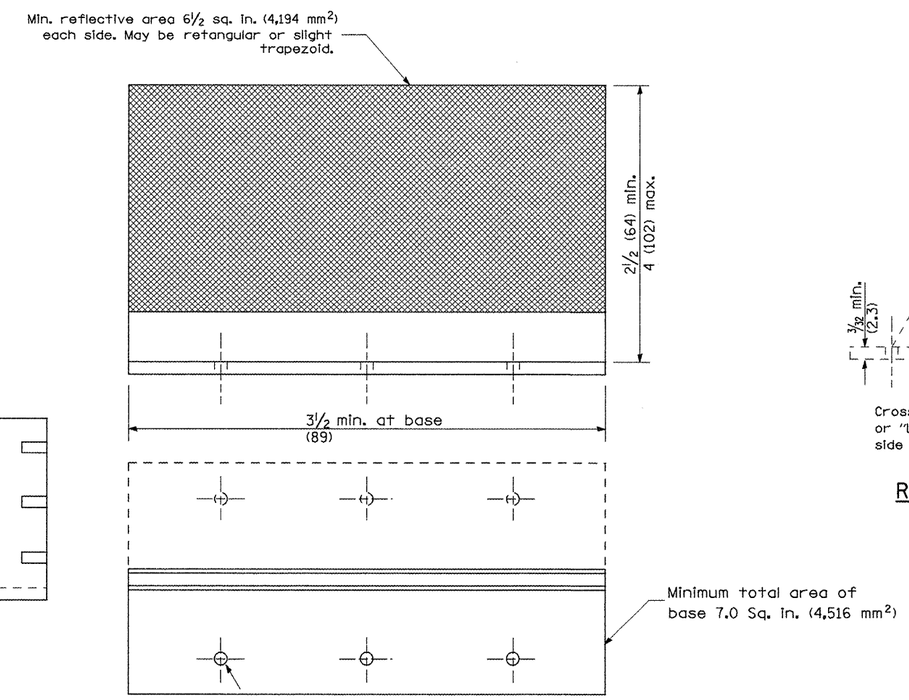

REFLECTOR MARKER TYPE C

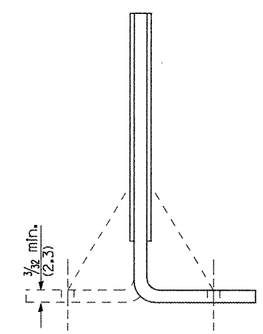

Cross section may be "T"
or "L" shaped and may have
side supports at ends.

REFLECTORS

All dimensions are in inches (millimeters)
unless otherwise noted.

STATE OF ILLINOIS
DEPARTMENT OF TRANSPORTATION

GUARDRAIL AND BARRIER WALL DELINEATION

NOT TO SCALE

SHT. 3 OF 3
CADD STD. 635101-D4

F.A.I. RTE.	SECTION	COUNTY	TOTAL SHEETS	SHEET NO.
74	48(27RS-3; (27HB-5)I, I-1)	KNOX	104	101
		CONTRACT NO. 68062		
FED. ROAD DIST. NO.	ILLINOIS	FED. AID PROJECT		

DETAIL OF INERTIAL BARRIERS

(70 MPH (110km/h) DESIGN – 64′ (19.5m) MEDIAN)

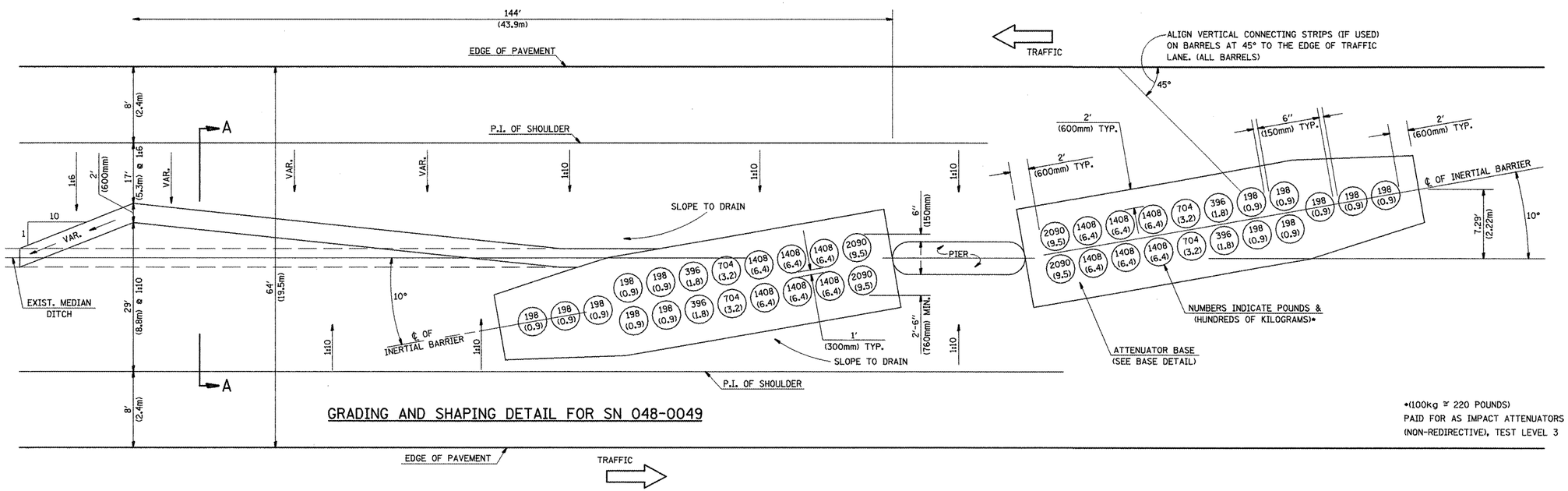

GRADING AND SHAPING DETAIL FOR SN 048-0049

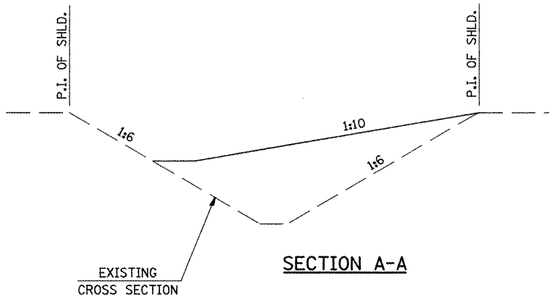

SECTION A-A

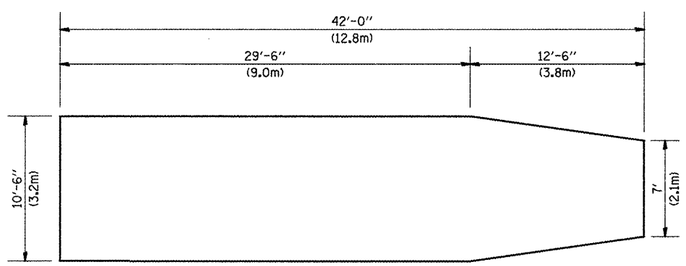

BASE DETAIL FOR SN 048-0049

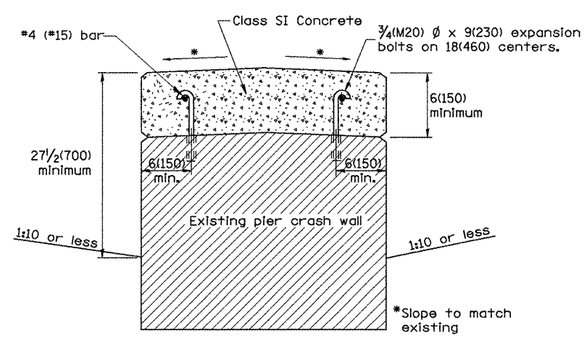

TYPICAL PIER CRASH WALL RECONSTRUCTION

(Optional: Reconstruction required in order to meet 27½(700) minimum height.)

CRASH WALL LOCATIONS:

STA. 529+12.92 - SN 048-0049
STA. 636+30 - SN 048-003

GENERAL NOTES

1. ALL 1:10 SLOPES SHOWN ON THIS DETAIL SHALL BE CONSTRUCTED 1:10 OR FLATTER.
2. THE SLOPES AS SHOWN ON THIS DETAIL SHALL APPLY TO BOTH ENDS OF THE BRIDGE PIERS.
3. THE LENGTH X WIDTH OF MODULE IS 38.0′ x 6.5′ (11.58m x 1.98m) 19 MODULES - MASS 17,600 LBS. (7990kg)
4. IN AREAS OF 1:10 SLOPES PRECEDING THE ATTENUATOR IN THE MEDIAN INSTALLATION, FOUR OR MORE WOOD POSTS SHALL BE PLACED AT 5′ (1.5m) INTERVALS IN THE MEDIAN ℄, SEE SPECIAL PROVISIONS AND SCHEDULES.

All slope ratios are expressed as units of vertical displacement to units of horizontal displacement (V:H)

All dimensions are in inches (millimeters) unless otherwise noted.

DESIGNER NOTES:
1. Include Special Provision "Sand Modul Impact Attenuators"
2. If used, tabulate the "Class SI Concrete" and "Expansion Bolts" quantities to raise the Pier Crash Walls.
3. Designer should review Median Drainage.
4. Verify Dist. STD No. for Design Speed & Median Width.

01-01-97	RENUM. F-3.02a, NEW REVISION BOX, REVISED	T.P.
	TITLE BOX, REVISED NOTES	
08-02	REVISED	M.A.
10-16-06	REVISED TO 2007 SPEC.	M.A.

STATE OF ILLINOIS
DEPARTMENT OF TRANSPORTATION

MEDIAN SAND MODULE IMPACT ATTENUATOR
70 MPH DESIGN – 64′ MEDIAN

NOT TO SCALE

CADD STD. 650004-D4

F.A.I. RTE.	SECTION	COUNTY	TOTAL SHEETS	SHEET NO.
74	48(27RS-3; (27HB-5)I, I-1)	KNOX	104	102
		CONTRACT NO. 68062		

FED. ROAD DIST. NO. | ILLINOIS | FED. AID PROJECT

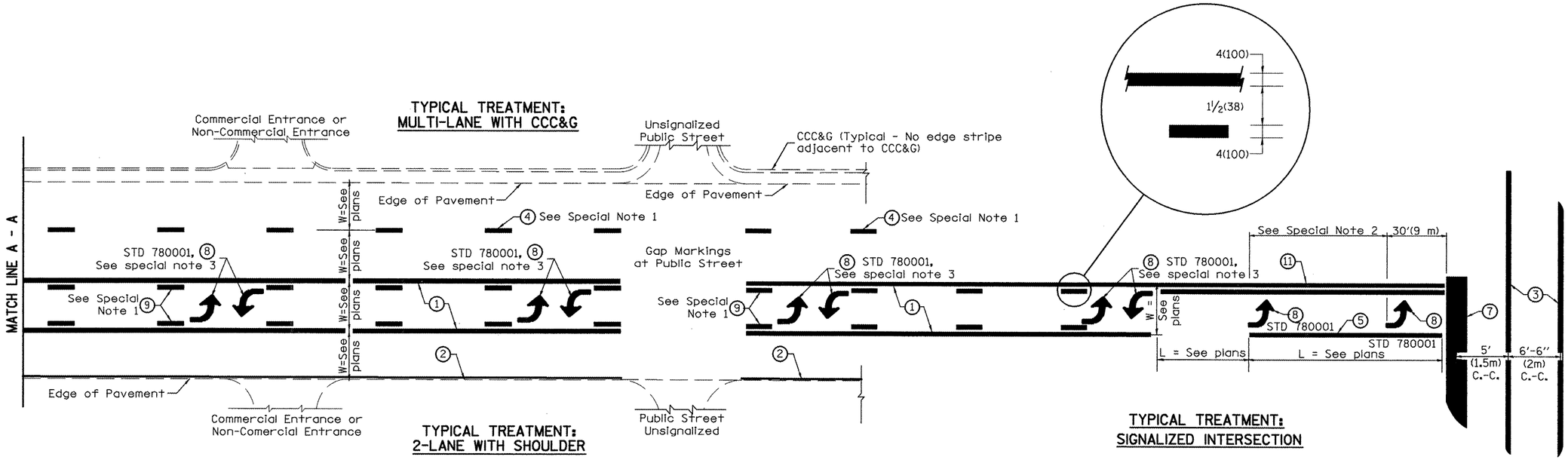

FLUSH PAVED MEDIAN: TWO-WAY LEFT TURN LANE WITH ONE-WAY LEFT TURN LANE AT SIGNALIZED INTERSECTION

TYPICAL PAVEMENT MARKING LEGEND

(Note: This is a District Standard Legend. Some elements may not apply to specific project.)

1. 4(100) Solid (Yellow)
2. 4(100) Solid (White)
3. 2-6(150) Crosswalk @ 6'-6" (2m)min C.-C. (White)
   2-8(200) Crosswalk @ 6'-6" (2m)min C.-C. (White) (When traffic signals are present.)
4. 6(150) Skip-Dash (White) — 10' (3.05m) / 30' (9.14m) / 10' (3.05m) (See Special Note 1)
5. 8(200) Solid (White)
6. 12(300) Diagonal (White) (Item 6 is shown on Std. 780001)
7. 24(600) Stop Bar (White)
8. Letters & Arrows — 33' (10m) (See Std. 780001 and Special Notes 2 & 3)
9. 4(100) Skip-Dash (Yellow) — 10' (3.05m) / 30' (9.14m) / 10' (3.05m) (See Special Note 1)
10. 12(300) Diagonal (Yellow) (See Table A)
11. 4(100) Double Solid (Yellow) — 11(280) C.-C. — See Table A — 45°

SPECIAL NOTES

1. Skip-Dash markings will be centered between both ends of city blocks and shall be placed in alignment transversly across the pavement.
2. The following shall apply to arrows located in one-way left turn lanes:
   A. A minimum of two (2) arrows is required.
   B. The maximum spacing between arrows is 80' (24 m).
   C. Arrows shall be evenly spaced if three (3) or more are required.
3. The following shall apply to arrow pairs located in two-way left turn lanes:
   A. A minimum of two (2) arrow pairs is required.
   B. The maximum spacing between arrow pairs is 200' (61 m).
   C. Arrow pairs shall be evenly spaced if three (3) or more are required.
   D. The spacing between Bi Directional Left Turn Arrows is 33' (10 m).

GENERAL NOTES

1. Refer to State Standard 780001 for additional Pavement Markings including letters & arrows.
2. See Plans for Pavement Markings adjacent to curbed islands and medians, and through lane reductions.

DESIGNER NOTES:
1. Include State Standard 780001 (Typical Pavement Markings)

01-01-97	RENUM. F-8.03, NEW REVISION BOX	T.P.	10-16-06	REVISED TO 2007 SPEC.	
02-07-97	ADD BI DIRECTIONAL DIMENSION	J.A.			
10-97	CORRECT BI DIRECTIONAL DIMENSION	J.A.			
08-02	ADD CROSSWALK DMNS. WITH T.S.	M.A.			

STATE OF ILLINOIS
DEPARTMENT OF TRANSPORTATION

TYPICAL PAVEMENT MARKINGS

NOT TO SCALE

SHT. 1 OF 2
CADD STD. 780001-D4

F.A.I. RTE.	SECTION	COUNTY	TOTAL SHEETS	SHEET NO.
74	48(27RS-3; (27HB-5)I, I-1)	KNOX	104	103
		CONTRACT NO. 68062		
FED. ROAD DIST. NO.	ILLINOIS	FED. AID PROJECT		

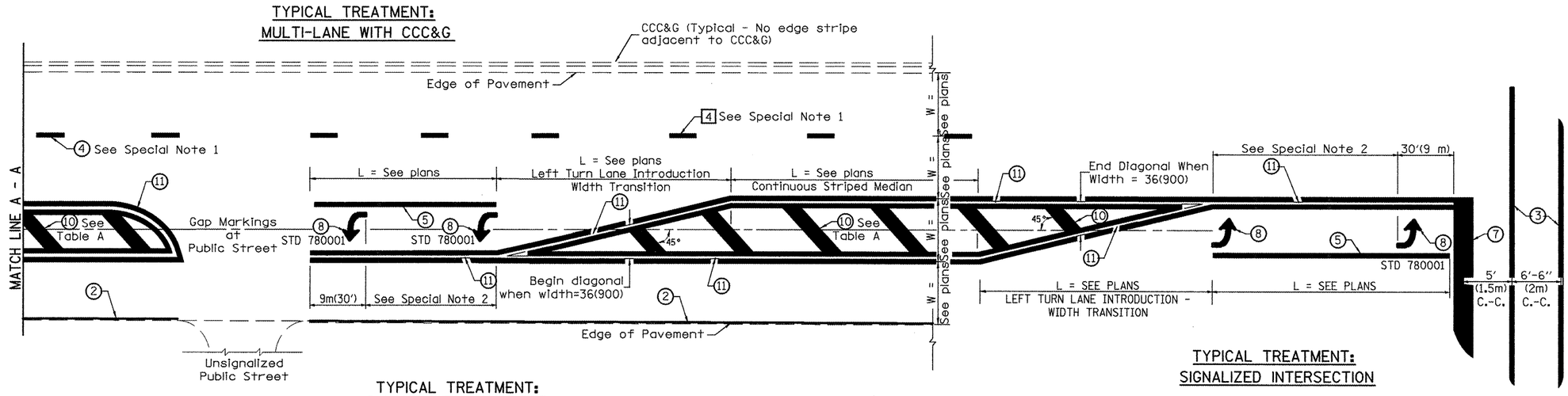

FLUSH PAVED MEDIAN: RESTRICTED LEFT TURN LANE

TABLE A

RECOMMENDED SPACING BETWEEN DIAGONAL LINES

SPEED LIMIT RANGE	CONTINUOUS	INTERSECTION CHANNELIZATION (Includes Width Transitions for Median and Left Turn Lane Introductions)
Less Than 30 mph (50 km/h)	50' (15m)	15' (5m)
30 - 45 mph (50 - 70 km/h)	75' (23m)	20' (6m)
Over 45 mph (70 km/h)	150' (46m)	30' (9m)

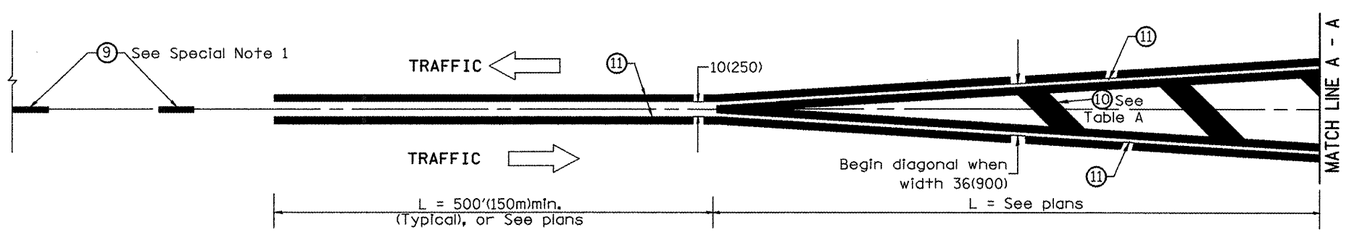

MEDIAN INTRODUCTION - WIDTH TRANSITIONS

All dimensions are in inches (millimeters) unless otherwise noted.

STATE OF ILLINOIS
DEPARTMENT OF TRANSPORTATION

TYPICAL PAVEMENT MARKINGS

NOT TO SCALE

SHT. 2 OF 2
CADD STD. 780001-D4

F.A.I. RTE.	SECTION	COUNTY	TOTAL SHEETS	SHEET NO.
74	48(27RS-3; (27HB-5)I, I-1)	KNOX	104	104
		CONTRACT NO. 68062		
FED. ROAD DIST. NO.	ILLINOIS	FED. AID PROJECT		