F.A.I. RTE.	SECTION	COUNTY	TOTAL SHEETS	SHEET NO.
88	BRIDGE DECK REPAIRS 2007-1	ROCK ISLAND	64	29
FED. ROAD DIST. NO.	ILLINOIS	FED. AID PROJECT		

Contract No. 64D24 Sheet 8 of 8

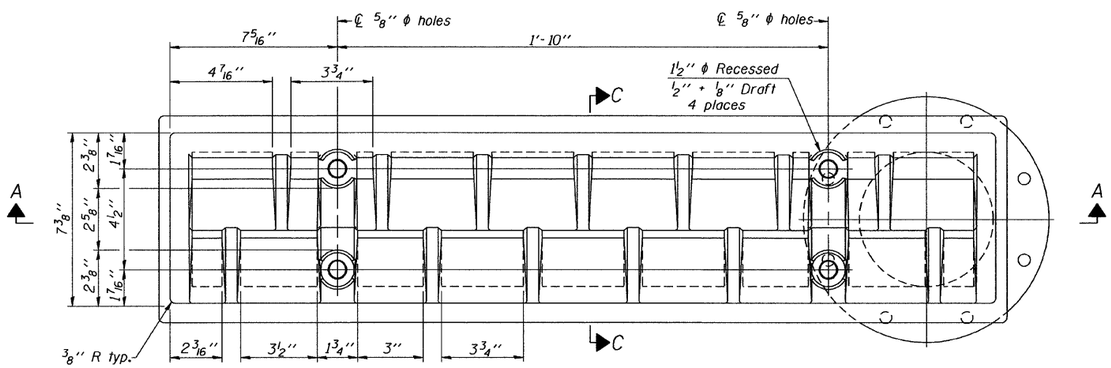

PLAN

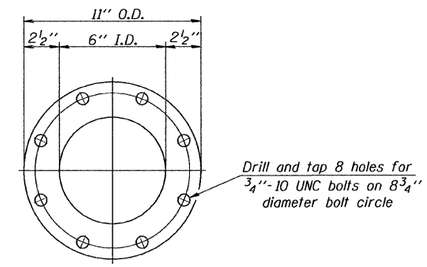

VIEW B-B

Notes:

All cast iron parts shall be gray iron conforming to the requirements of AASHTO M 105, Class 35B.

Bolts, anchor studs, washers and nuts shall conform to the requirements of ASTM A 307 and shall be galvanized according to AASHTO M 232.

Downspouts located on the exterior side of a painted steel fascia beam shall be painted with the finish coat specified for the exterior side of the fascia beam.

As an alternate, bolts, anchor studs, washers and nuts may be stainless steel according to Article 1006.29(d) of the Standard Specifications.

Structural steel weldments of equal sections and of the same configuration may be substituted for the cast iron scupper frame. Fillet or full penetration welds shall be used for the weldments. Details shall be submitted to the Engineer for approval. Structural steel weldments shall not be substituted for the cast iron scupper grate. Structural steel frames and downspouts shall be galvanized according to AASHTO M111.

The Contractor shall take appropriate measures to assure that Protective Coat is not applied to the scupper.

Cost of the Grate, Frame, Downspout, Anchor Studs, Bolts, Washers and Nuts including complete installation of the scupper shall be paid for at the contract unit price each for Drainage Scupper, DS-33.

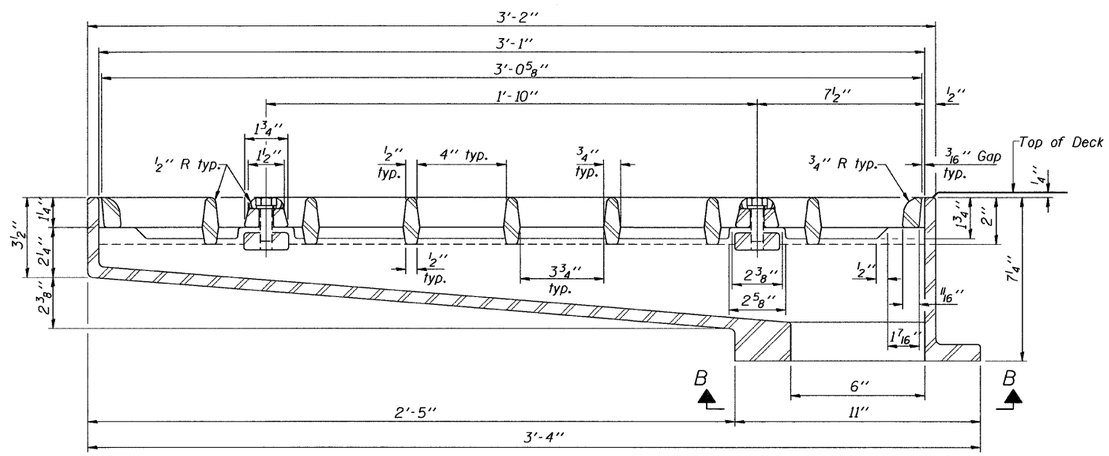

SECTION A-A

See sheet of for scupper location relative to parapet.

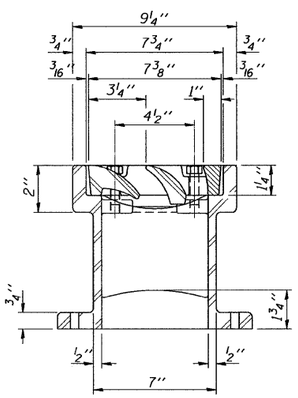

SECTION C-C

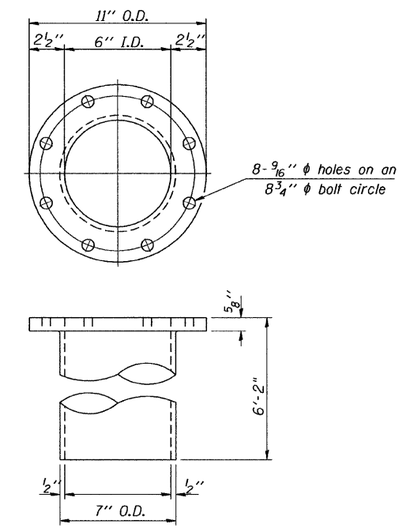

DOWNSPOUT

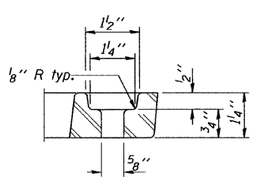

BOLT HOLE DETAIL

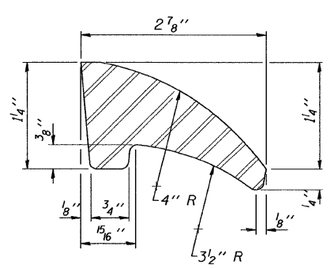

FIRST VANE DETAIL

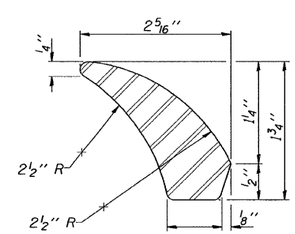

SECOND VANE DETAIL

BILL OF MATERIAL

ITEM	UNIT	QUANTITY
Drainage Scupper, DS-33	Each	4

DESIGNED	S.D.H.
CHECKED	E.E.J.
DRAWN	M.S.M.
CHECKED	S.D.H.

DS-33 5-16-08

DRAINAGE SCUPPER, DS-33
C.H. 49 (317th STREET) OVER I-88
F.A.I. ROUTE 88
SECTION: BRIDGE DECK REPAIRS 2007-1
ROCK ISLAND COUNTY
STATION 2130+77.86
S.N. 081-0132

DATE: 12-09-08

GRAEF, ANHALT, SCHLOEMER & ASSOCIATES INC
CHICAGO ILLINOIS

n:\jobs2008\plot\2001-4014.09\081-0132\317th St.\00\081_0132-S29.dgn
12/8/2008