TEMPORARY SOIL RETENTION SYSTEM DETAIL

STA 73+70

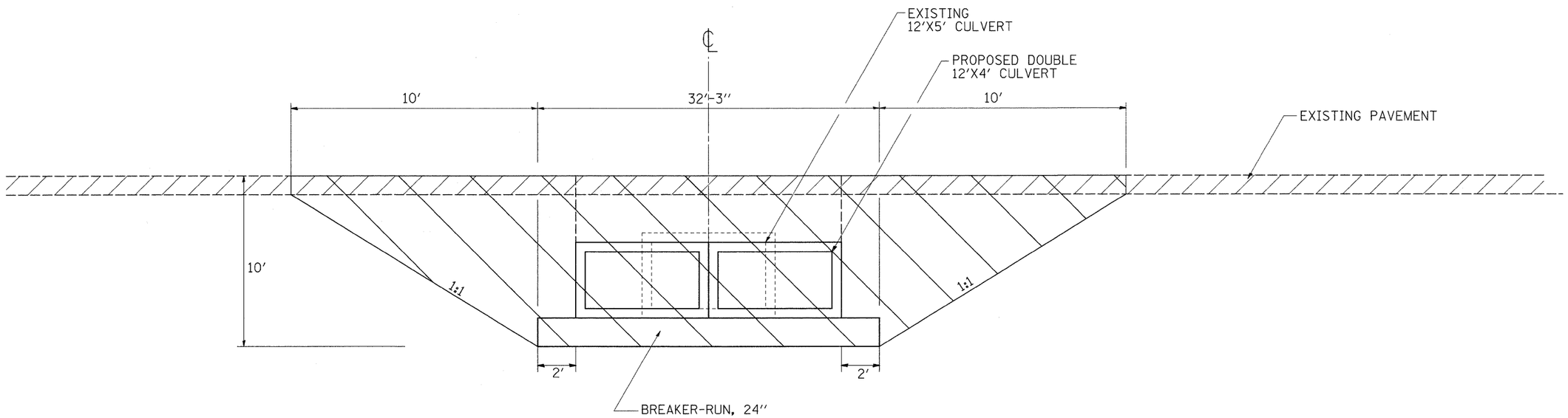

X0323988 TEMPORARY SOIL RETENTION SYSTEM

SQ FT	LOCATION
	US BUS 20
432.5	STA 73+70 - STAGE 2
432.5	STA 73+20 - STAGE 3
865.0	TOTAL

TEMPORARY SOIL
RETENTION SYSTEM AREA

FILE NAME = c:\projects\p211406\d11406spl.dgn	USER NAME = polzinej	DESIGNED -	REVISED -	STATE OF ILLINOIS DEPARTMENT OF TRANSPORTATION	TEMPORARY SOIL RETENTION SYSTEM DETAIL	F.A.P. RTE.	SECTION	COUNTY	TOTAL SHEETS	SHEET NO.
		DRAWN -	REVISED -			303	(40R)T	WINNEBAGO	67	44
	PLOT SCALE = 50.0000 ' / IN.	CHECKED -	REVISED -					CONTRACT NO. 64C65		
	PLOT DATE = Mon Aug 04 11:37:49 2008	DATE -	REVISED -		SCALE: SHEET NO. OF SHEETS STA. TO STA.	FED. ROAD DIST. NO.	ILLINOIS	FED. AID PROJECT		