ROUTE NO.	SECTION	COUNTY	TOTAL SHEETS	SHEET NO.
308	(103C-1BR)D	Jo Daviess	62	44
FED. ROAD DIST.		ILLINOIS	FED. AID PROJECT-	

SHEET NO. 20 OF 26 SHEETS

Contract # 64C03

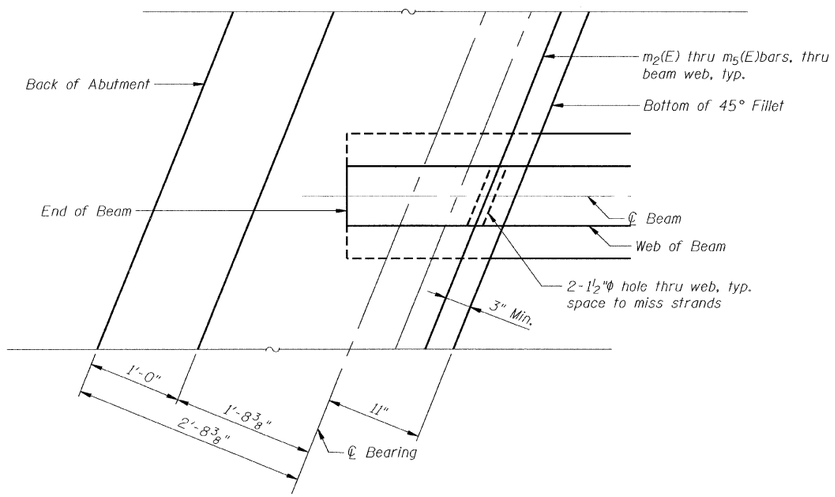

INSERT LOCATION AT ABUTMENTS

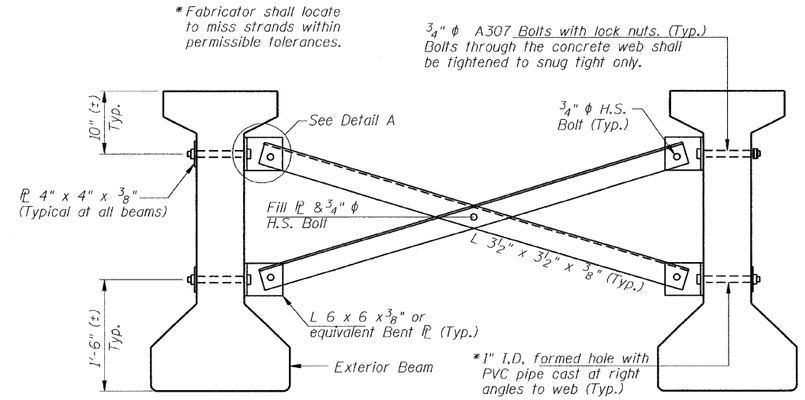

NOTES:

All material for bracing shall be hot dip galvanized according to AASHTO M111 unless otherwise noted.

Two hardened washers are required for each set of oversized holes.

All bolts shall be 15/16" φ unless otherwise noted.

5/16" x 3" x 3" plate washers are required over all slotted holes.

All bolts shall be galvanized according to AASHTO M232.

Bracing shall be installed as beams are erected and tightened as soon as possible during erection.

Permanent bracing shall not be paid for separately, but shall be included in the Cost of Furnishing and Erecting Precast Prestressed Concrete I-Beams, 48".

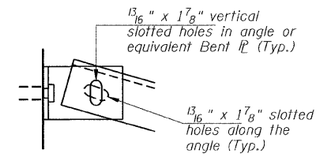

DETAIL A

PERMANENT BRACING DETAILS

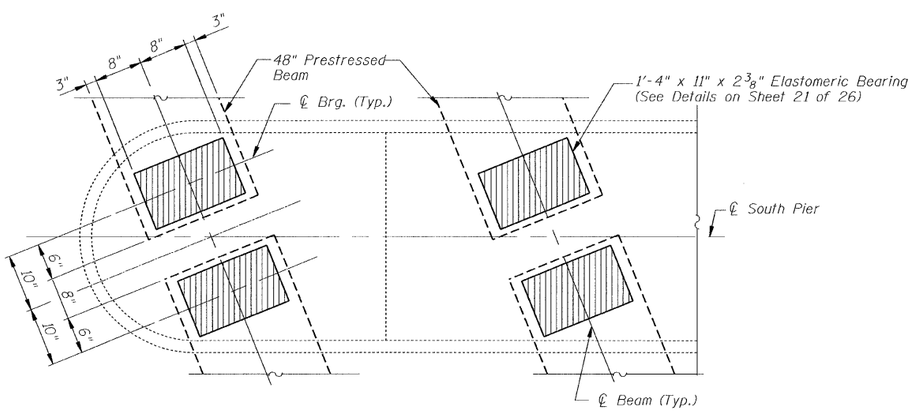

BEARING PADS DETAILS AT SOUTH PIER

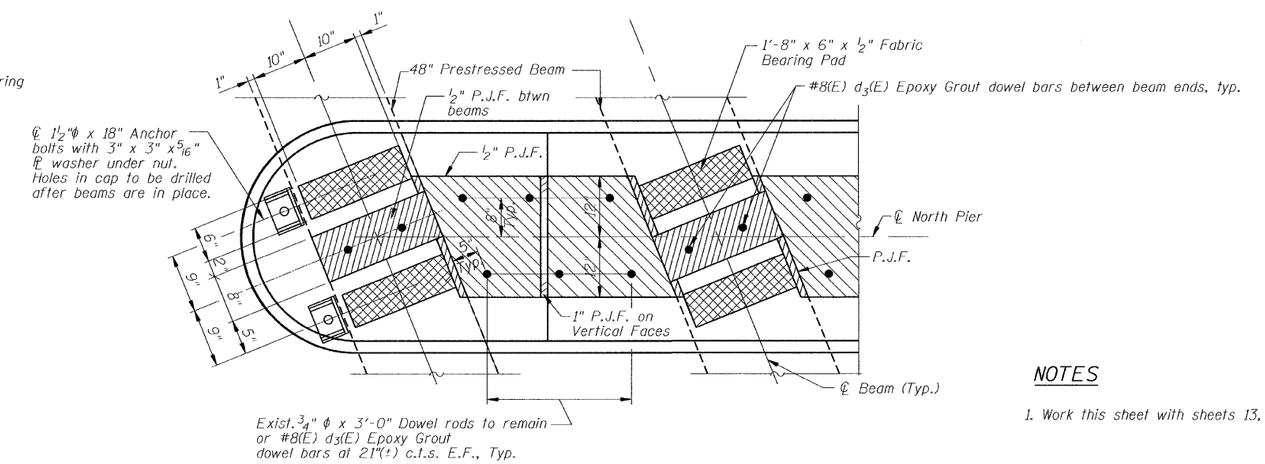

BEARING PADS AND P.J.F. DETAILS AT NORTH PIER

NOTES

1. Work this sheet with sheets 13, 18, 19, and 25 of 26.

DESIGNED	J.Z.
CHECKED	S.D.H.
DRAWN	M.S.M.
CHECKED	J.Z.

DIAPHRAGM DETAILS

IL Route 84 over Irish Hollow Creek

F.A.P. RTE 308, SECTION (103C-1BR)D

JO DAVIESS COUNTY

STATION 449+62.06

DATE: 12-11-08 S.N. 043-0037

GRAEF, ANHALT, SCHLOEMER & ASSOCIATES INC

CHICAGO ILLINOIS

n:\jobs2008\plot\2008-308\00\043-0037-sh20.dgn
12/2/2008