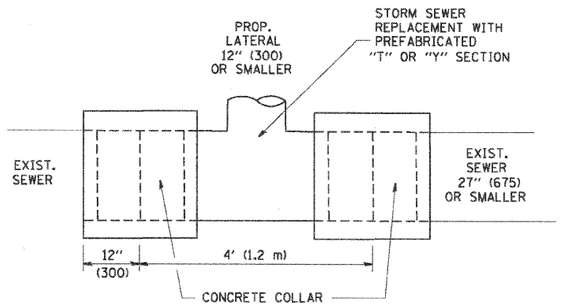

DETAIL "A"

LATERAL CONNECTION TO EXISTING SEWER
OF 27" (675) OR SMALLER

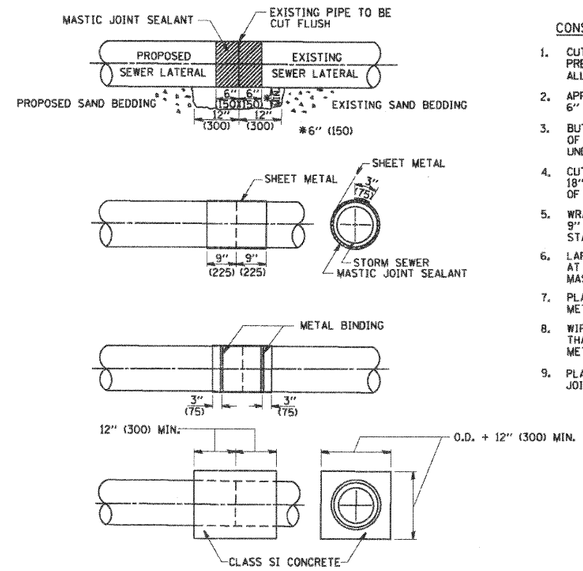

DETAIL "B"

CLASS SI CONCRETE COLLAR

CONSTRUCTION SEQUENCE

1. CUT THE EXISTING END OF THE PIPE SO AS TO PRESENT A FLUSH BUTT JOINT. BRUSH AND CLEAN ALL PIPES.
2. APPLY THE MASTIC JOINT SEALANT TO THE FIRST 6" (150) OF EACH PIPE.
3. BUTT THE PIPES TOGETHER LEAVING A MINIMUM OF 12" x 6" (300 x 150) DEEP EXCAVATION UNDER AND AROUND EACH PIPE END.
4. CUT A PIECE OF SHEET METAL GAGE NO. 19 1.1 (0.0418) 18" (450) WIDE BY THE OUTSIDE CIRCUMFERANCE OF THE PIPE PLUS 3" (75) LONG.
5. WRAP THE SHEET METAL AROUND THE PIPES, 9" (225) ON EACH SIDE OF THE JOINT, STARTING AT THE TOP OF THE PIPE.
6. LAP THE SHEET METAL AT LEAST 3" (75) AT THE TOP OF THE PIPE AND PLACE THE MASTIC JOINT SEALANT BETWEEN THE LAP.
7. PLACE TWO METAL BANDS AROUND THE SHEET METAL AND TIGHTEN.
8. WIPE OFF ANY EXCESS MASTIC JOINT SEALANT THAT OOZES OUT FROM BETWEEN THE SHEET METAL AND THE PIPES.
9. PLACE CLASS SI CONCRETE AROUND THE JOINT.

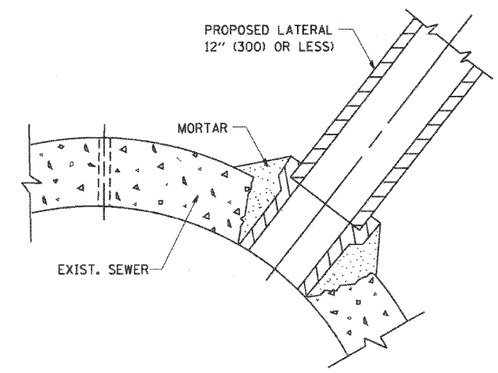

DETAIL "C"

PROPOSED LATERAL
CONNECTION TO EXISTING SEWER
OF 30" (750) OR LARGER

NOTES

MATERIAL

MATERIAL USED FOR THE TEE OR WYE SECTION SHALL BE COMPATIBLE WITH THE EXISTING STORM SEWER OR THE PROPOSED STORM SEWER.

CONSTRUCTION METHODS

I. THIS WORK SHALL BE CONSTRUCTED IN CONFORMANCE WITH THE APPLICABLE PORTIONS OF SECTION 550 OF THE STANDARD SPECIFICATIONS.

II. CONNECTION TO AN EXISTING STORM SEWER SHALL BE BY EITHER OF THE FOLLOWING METHODS:

A) PROPOSED STORM SEWER CONNECTION TO EXISTING SEWER OF 27" (675) OR SMALLER SEE DETAIL "A" AND "B".

B) PROPOSED STORM SEWER CONNECTION TO EXISTING SEWER OF 30" (750) OR LARGER SEE DETAIL "C".

IF THE EXISTING SEWER PIPE IS CRACKED, BROKEN OR OTHERWISE DAMAGED BY THE CONTRACTOR IN MAKING THE CIRCULAR OPENING, THE CONTRACTOR SHALL REPLACE THAT SECTION OF PIPE WITH PIPE EQUAL AND SIMILAR IN ALL RESPECTS TO THE PIPE IN THE EXISTING SEWER, IN A CAREFUL WORKMANLIKE MANNER, WITHOUT EXTRA COMPENSATION.

GENERAL

CARE MUST BE TAKEN TO PREVENT DEBRIS FROM ENTERING THE SEWER. ALL DEBRIS WHICH ENTERS THE SEWER MUST BE REMOVED. THE SEWER MUST BE LEFT CLEAN AND UNOBSTRUCTED UPON COMPLETION OF THE CONTRACT.

CARE MUST BE TAKEN TO PREVENT ANY PART OF THE NEW PIPE CONNECTION FROM PROJECTING INTO THE EXISTING SEWER.

BASIS OF PAYMENT

TEE OR WYE CONNECTIONS SHALL BE PAID FOR AT THE CONTRACT UNIT PRICE EACH FOR STORM SEWER TEE OR WYE OF THE TYPE AND SIZE SPECIFIED IN THE PLANS, THIS PRICE SHALL INCLUDE ALL EXCAVATION OF THE TRENCH, REMOVAL OF THE EXISTING STORM SEWER, FURNISHING AND INSTALLING THE SPECIFIED TEE OR WYE SECTION, FURNISHING AND INSTALLING THE REQUIRED CONCRETE COLLAR, AND ALL OTHER MATERIAL NECESSARY TO COMPLETE THIS WORK AS SHOWN AND SPECIFIED.

REMOVAL AND REINSTALLATION OF EXISTING STORM SEWER ADJACENT TO THE PROPOSED TEE OR WYE SECTION, FOR THE PURPOSE OF FACILITATING THE INSTALLATION OF THE TEE OR WYE SECTION, WILL NOT BE PAID FOR SEPARATELY BUT SHALL BE INCLUDED IN THE UNIT PRICE BID FOR THE WORK.

TRENCH BACKFILL, EXCAVATION IN ROCK AND REMOVAL AND REPLACEMENT OF UNSUITABLE MATERIAL BELOW PLAN BEDDING GRADE WILL BE PAID FOR SEPARATELY.

CONCRETE COLLAR FOR CONNECTING A PROPOSED STORM SEWER TO AN EXISTING STORM SEWER WILL NOT BE PAID PAID FOR SEPARATELY BUT SHALL BE INCLUDED IN THE COST OF THE PROPOSED STORM SEWER.

ALL DIMENSIONS ARE IN INCHES (MILLIMETERS) UNLESS OTHERWISE SHOWN.

FILE NAME = W:\distatc\22x34\bd07.dgn	USER NAME = gaglianobt	DESIGNED - M. DE YONG	REVISED - M. DE YONG 05-08-92	STATE OF ILLINOIS DEPARTMENT OF TRANSPORTATION	DETAIL OF STORM SEWER CONNECTION TO EXISTING SEWER			F.A. RTE.	SECTION	COUNTY	TOTAL SHEETS / SHEET NO.
		DRAWN -	REVISED - R. SHAH 09-09-94					3513	08-00107-00-PV	COOK	169 / 89
	PLOT SCALE = 50.000 ' / IN.	CHECKED -	REVISED - R. SHAH 10-25-94					BD500-01 (BD-7)		CONTRACT NO.	
	PLOT DATE = 1/4/2008	DATE - 07-25-90	REVISED - R. SHAH 06-12-96		SCALE: NONE	SHEET NO. 1 OF 1 SHEETS	STA. TO STA.	FED. ROAD DIST. NO. 1	ILLINOIS	FED. AID PROJECT M -8003(723)	