F.A.P. RTE.	SECTION	COUNTY	TOTAL SHEETS	SHEET NO.
412	16-00620-00-BR	WINNEBAGO	109	1
	WHA= 1017017	CONTRACT NO. 85704		
	ILLINOIS FED. AID PROJECT 7K29(857)			

FOR INDEX OF SHEETS, HIGHWAY STANDARDS, AND UTILITIES, SEE SHEET NO. 2

03-05-2021 LETTING ITEM 114

ATTENTION CONTRACTORS

THE ILLINOIS DEPARTMENT OF TRANSPORTATION BUREAU OF MATERIALS AND PHYSICAL RESEARCH, "PROJECT PROCEDURES GUIDE" IS APPLICABLE TO THIS PROJECTS

STATE OF ILLINOIS
DEPARTMENT OF TRANSPORTATION
DIVISION OF HIGHWAYS

PLANS FOR PROPOSED FEDERAL AID PROJECT MAJOR BRIDGE PROGRAM

F.A.P. 412 (ALPINE ROAD) OVER
F.A.U. 5146 (FOREST HILLS ROAD)
SECTION 16-00620-00-BR
PROJECT 7K29(857)
STRUCTURE REHABILITATION
WINNEBAGO COUNTY

LOCATION OF SECTION INDICATED THUS:-

C-92-034-20

LOCATION MAP SCALE 0 1 2 4 MILES

RANGE 1 EAST OF 3RD PM | RANGE 2 EAST OF 3RD PM

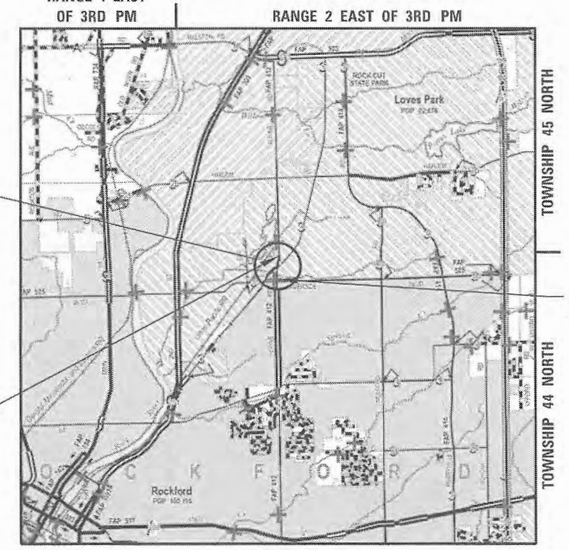

CONSTRUCTION ENDS STATION 510+50.00

CONSTRUCTION BEGINS STATION 499+00.00

EXISTING STRUCTURE: SN 101-3068
BUILT IN 1972 BY WINNEBAGO COUNTY AT STA. 504+16.50 AS A FOUR SPAN (52'-6",70'-8",70'-8",50'-0") SKEWED 48° RT. AHEAD CONTINUOUS STEEL WF BEAM GRADE SEPERATION STRUCTURE OVER FOREST HILLS ROAD ON REINFORCED CONCRETE PIERS AND CONCRETE PILE BENT ABUTMENTS. 251'-4" BACK-TO-BACK OF ABUTMENTS AND 66'-0" OUT TO OUT OF DECK.

THE EXISTING STRUCTURE IS TO BE REHABBED.

0 100' 200' 300' — 1" = 100'
0 10' 20' 30' — 1" = 10'
0 50' 100' — 1" = 50'
0 50' 100' — 1" = 40'
0 50' 100' — 1" = 30'
0 50' 100' — 1" = 20'

FULL SIZE PLANS HAVE BEEN PREPARED USING STANDARD ENGINEERING SCALES. REDUCED SIZED PLANS WILL NOT CONFORM TO STANDARD SCALES. IN MAKING MEASUREMENTS ON REDUCED PLANS, THE ABOVE SCALES MAY BE USED.

J.U.L.I.E.
JOINT UTILITY LOCATION INFORMATION FOR EXCAVATION
1-800-892-0123
OR 811

PROJECT ENGINEER - LGN
PROJECT MANAGER - PLP

CONTRACT NO. 85704

FUNCTIONAL CLASSIFICATION
PRINCIPAL ARTERIAL
DESIGN SPEED 45 MPH
PROPOSED SPEED 45 MPH
2021 ADT = 18,150
SUBURBAN ARTERIAL GUIDELINES

GROSS LENGTH = 1,150 FT = 0.218 MILE
NET LENGTH = 1,150 FT = 0.218 MILE

WINNEBAGO COUNTY HIGHWAY DEPARTMENT

APPROVED Oct 29 20 2020
WINNEBAGO COUNTY ENGINEER

PASSED 11/13 20 20
DISTRICT 2 LOCAL ROADS & STREETS ENGINEER

RELEASING FOR BID BASED ON LIMITED REVIEW 11/13 20 20
DEPUTY DIRECTOR OF HIGHWAYS, REGION 2 ENGINEER

LICENSED PROFESSIONAL ENGINEER
LUKE G. NELSON
062-065230
STATE OF ILLINOIS

DATE: 11/04/2020

EXPIRES 11/30/21

WILLETT HOFMANN & ASSOCIATES INC
ENGINEERING ARCHITECTURE LAND SURVEYING
809 EAST 2ND STREET, DIXON, IL 61021-0367
T: 815-284-3381 DESIGN FIRM: #184-000918

INDEX OF SHEETS

HIGHWAY STANDARDS

000001-08	STANDARD SYMBOLS, ABBREVIATIONS, AND PATTERNS
001001-02	AREAS OF REINFORCEMENT BARS
280001-07	TEMPORARY EROSION CONTROL SYSTEMS
420406	PAVEMENT CONNECTOR (HMA) FOR BRIDGE APPROACH SLAB
515001-04	NAME PLATE FOR BRIDGES
606001-07	CONCRETE CURB TYPE B AND COMBINATION CONCRETE CURB AND GUTTER
606301-04	PC CONCRETE ISLANDS AND MEDIANS
630001-12	STEEL PLATE BEAM GUARDRAIL
631031-17	TRAFFIC BARRIER TERMINAL, TYPE 6
701001-02	OFF-RD OPERATIONS, 2L, 2W, MORE THAN 15' AWAY
701006-05	OFF-RD OPERATIONS, 2L, 2W, 15' TO 24" FROM PAVEMENT EDGE
701301-04	LANE CLOSURE, 2L, 2W, SHORT TIME OPERATIONS
701606-10	URBAN SINGLE LANE CLOSURE, MULTILANE, 2W WITH MOUNTABLE MEDIAN
701901-08	TRAFFIC CONTROL DEVICES
704001-08	TEMPORARY CONCRETE BARRIER
720001-01	SIGN PANEL MOUNT DETAILS
720006-04	SIGN PANEL ERECTION DETAILS
720011-01	METAL POSTS FOR SIGNS, MARKERS & DELINEATORS
725001-01	OBJECT AND TERMINAL MARKERS
728001-01	TELESCOPING STEEL SIGN SUPPORT
729001-01	APPLICATIONS OF TYPES A & B METAL POSTS (FOR SIGNS & MARKERS)
731001-01	BASE FOR TELESCOPING STEEL SIGN SUPPORT
780001-05	TYPICAL PAVEMENT MARKINGS
781001-04	TYPICAL APPLICATIONS RAISED REFLECTIVE PAVEMENT MARKERS
782006-01	GUARDRAIL AND BARRIER WALL REFLECTOR MOUNTING DETAILS
836001-04	LIGHT POLE FOUNDATION

GENERAL NOTES

THE REMOVAL OF BITUMINOUS SURFACING LESS THAN 6 INCH THICKNESS NOT ON A RIGID TYPE BASE REMOVED IN CONJUNCTION WITH THE BASE SHALL BE REMOVED AS EARTH EXCAVATION. THE REMOVAL OF BITUMINOUS SURFACING ON A RIGID TYPE BASE OR A THICKNESS OF 6 INCHES OR MORE ON A FLEXIBLE BASE REMOVED IN CONJUNCTION WITH THE BASE SHALL BE INCLUDED IN THE CONTRACT UNIT PRICE FOR PAVEMENT REMOVAL OF THE TYPE SPECIFIED.

THE FINAL TOP FOUR INCHES OF SOIL IN ANY RIGHT-OF-WAY AREA DISTURBED BY THE CONTRACTOR MUST BE CAPABLE OF SUPPORTING VEGETATION. THE SOIL MUST BE FROM THE A HORIZON (ZERO TO 2' DEEP) OF SOIL PROFILES OF LOCAL SOILS. THE COST OF THIS WORK SHALL BE INCLUDED IN THE UNIT PRICES BID FOR TOPSOIL FURNISH AND PLACE, 4" AND NO ADDITIONAL COMPENSATION WILL BE ALLOWED.

ALL BORROW/WASTE/USE SITES MUST BE APPROVED BY THE CITY PRIOR TO REMOVING ANY MATERIAL FROM THE PROJECT OR INITIATING ANY EARTHMOVING ACTIVITIES, INCLUDING TEMPORARY STOCKPILING OUTSIDE THE LIMITS OF CONSTRUCTION.

FERTILIZER NUTRIENTS SHALL BE APPLIED AT THE RATE SPECIFIED IN SECTIONS 250 AND 252 OF THE STANDARD SPECIFICATIONS. THIS SHALL BE INCLUDED IN THE COST OF THE SEEDING OR SODDING.

GENERAL NOTES (CONT.)

ALL "AGGREGATE SUBGRADE IMPROVEMENT" (SECTION 301), SHALL BE COMPLETED IN ACCORDANCE WITH ARTICLES 311.04, 311.05, 311.05(A), 311.06 AND 311.07. ALL AGGREGATE SUBGRADE THICKNESSES EQUAL TO OR LESS THAN 12 INCHES SHALL BE CONSTRUCTED OF AGGREGATE OF CA02 GRADATION. ALL AGGREGATE SUBGRADE THICKNESSES GREATER THAN 12 INCHES SHALL BE CONSTRUCTED OF CS02.

PAVEMENT MARKING SHALL BE DONE ACCORDING TO STANDARD 780001, EXCEPT AS FOLLOWS:

1. ALL WORDS, SUCH AS ONLY, SHALL BE 8 FEET HIGH.
2. ALL NON-FREEWAY ARROWS SHALL BE THE LARGE SIZE.
3. THE DISTANCE BETWEEN YELLOW NO-PASSING LINES SHALL BE 8 INCHES, NOT 7 INCHES, AS SHOWN IN THE DETAIL OF TYPICAL LANE AND EDGE LINES.
4. CENTERLINE SKIP DASH PAVEMENT MARKING ON MULTI-LANE DIVIDED, MULTI-LANE UNDIVIDED, AND ONE-WAY ROADWAY SHALL BE ACCORDING TO DISTRICT STANDARD 41.1.

WHERE THE PROPOSED CONSTRUCTION MEETS AN EXISTING BITUMINOUS OR CONCRETE SURFACE, OR WHERE SAWING IS STATED ON THE PLANS, THE EXISTING SURFACE SHALL BE SAWED IN A NEAT, STRAIGHT LINE. COST OF SAWING IS TO BE INCLUDED IN THE UNIT BID PRICES OF THE CONTRACT.

ALL PAVEMENT SHALL BE CLEANED AND "FRESH OIL" SIGNS SHALL BE PLACED AT ALL INTERSECTIONS OF THE STREETS PRIOR TO APPLYING BITUMINOUS MATERIALS (PRIME COAT).

THE CONTRACTOR SHALL CAREFULLY PRESERVE ALL PROPERTY MARKERS AND SECTION OR SUBSECTION MONUMENTS ENCOUNTERED UNTIL AN OWNER, AUTHORIZED SURVEYOR, OR AGENT HAS WITNESSED OR OTHERWISE REFERENCED THEIR LOCATION. ANY PROPERTY MARKERS AND SECTION OR SUBSECTION MONUMENTS, UNLESS REFERENCED, DAMAGED BY THE CONTRACTOR SHALL BE REPLACED AT THE EXPENSE OF THE CONTRACTOR.

CURBS SHALL BE SAW CUT AT 12' TO 15' INTERVALS AND TO MATCH PAVEMENT JOINTS UNLESS OTHERWISE DIRECTED BY THE ENGINEER.

ALL CONSTRUCTION MATERIALS WITHIN THE CITY ROW MUST BE IDOT CERTIFIED. DOCUMENTATION OF MATERIAL CERTIFICATION SHALL BE SUBMITTED PRIOR TO ENGINEER APPROVAL. ALL CONSTRUCTION MATERIAL NEEDING INSPECTION SHALL BE DONE ACCORDING TO THE LATEST IDOT PROJECT AND PROCEDURES GUIDE.

TEMPORARY HMA RAMPS SHALL BE INSTALLED AS NEEDED ON MAINLINE AND SIDESTREETS. COSTS FOR THE RAMPS SHALL BE INCIDENTAL TO HMA SURFACE COURSE, IL-9.5, MIX "D", N70

THE CONTRACTOR SHALL BE RESPONSIBLE FOR LOCATING AND PROTECTING UTILITY PROPERTY DURING CONSTRUCTION OPERATIONS AS OUTLINED IN ARTICLE 107.39 OF THE STANDARD SPECIFICATIONS. A MINIMUM OF 48 HOURS ADVANCE NOTICE IS REQUIRED FOR NON-EMERGENCY WORK. THE JULIE NUMBER IS 800-892-0123. THE FOLLOWING LISTED UTILITIES LOCATED WITHIN THE PROJECT LIMITS OR IMMEDIATELY ADJACENT TO THE PROJECT CONSTRUCTION LIMITS ARE MEMBERS OF JULIE:

AT&T DISTRIBUTION
CONTACT: HECTOR GARCIA
PH: (630) 573-5465
EMAIL: HG2929@ATT.COM

CITY OF LOVES PARK (WATER DEPT)
5440 WALKER AVE.
LOVES PARK, IL 61111
CONTACT: CRAIG MCDONALD
PH: (815) 877-1421
EMAIL: CRAIGMCDONALD@LOVES-PARK.IL.US

CITY OF LOVES PARK (STREET DEPT)
5440 WALKER AVE.
LOVES PARK, IL 61111
CONTACT: SHANNON MESSINGER
PH: (815) 654-5040
EMAIL: SHANNONMESSINGER@CITYOFIOVESPARK.COM

COMCAST
688 INDUSTRIAL DRIVE
ELMHURST, IL 60126
CONTACT: MARTHA GIERAS
PH: 224-229-5862
EMAIL: MARTHA_GIERAS@COMCAST.COM

COMED
ONE LINCOLN CENTRE
OAKBROOK TERRACE, IL 60181
CONTACT: DYLAN GERRALD
PH: (832) 978-1345
EMAIL: DYLAN.GERRALD@COMED.COM

NICOR GAS
1844 FERRY RD.
NAPERVILLE, IL 60563
CONTACT: CHIP PARROTT
EMAIL: CPARROT@SOUTHERNCO.COM

ROCK RIVER WATER RECLAMATION
3501 KISWAUKEE ST.
ROCKFORD, IL 61109
CONTACT: CHRIS BAER
EMAIL: CBAER@RRWRD.DST.IL.US

THE AREA TO BE PRIMED SHALL BE LIMITED TO THAT WHICH CAN BE COVERED WITH HMA ON THE NEXT DAYS PRODUCTIVITY, BUT NO MORE THAN FIVE (5) DAYS IN ADVANCE OF THE PLACEMENT OF THE HMA, UNLESS APPROVED BY THE ENGINEER.

WHENEVER, DURING CONSTRUCTION OPERATIONS, ANY DEBRIS IS DEPOSITED IN THE FLOW LINE OF DRAINAGE STRUCTURES, DITCHES, ETC. SUCH THAT THE NATURAL FLOW LINE OF WATER IS OBSTRUCTED, THIS DEBRIS SHALL BE REMOVED AT THE CLOSE OF EACH WORKING DAY. AT THE CONCLUSION OF CONSTRUCTION OPERATIONS, ALL DRAINAGE STRUCTURES AND FLOW LINES SHALL BE FREE FROM DIRT AND DEBRIS.

AS PART OF THE BIDDING PROCEDURE, THE CONTRACTOR SHALL VERIFY THAT THE QUANTITIES FOR PAY ITEMS AS PRESENTED IN THESE PLAN DOCUMENTS ARE SUBSTANTIALLY CORRECT; IF DISCREPANCIES ARE DETECTED THE CONTRACTORS SHALL NOTIFY THE ENGINEER AND OWNER AT LEAST 48 HOURS PRIOR TO START OF CONSTRUCTION IN ORDER TO ARRANGE FOR APPROPRIATE CONSTRUCTION INSPECTION. WORK PERFORMED OR MATERIALS AND EQUIPMENT INSTALLED WITHOUT INSPECTION MAY BE CONSIDERED UNACCEPTABLE AT THE DISCRETION OF THE ENGINEER AND MAY HAVE TO BE REPLACED AT NO COST TO THE ENGINEER OR OWNER.

GENERAL NOTES (CONT.)

FINAL INSPECTION OF THE WORK PERFORMED UNDER THIS CONTRACT WILL BE DONE BY THE ENGINEER OR OWNER PRIOR TO FINAL ACCEPTANCE; DEFECTS SHALL BE CORRECTED BY THE CONTRACTOR WITHOUT COST TO THE OWNER PRIOR TO ISSUANCE OF THE FINAL PAYMENT. ALL WORK PERFORMED UNDER THIS CONTRACT SHALL BE GUARANTEED WITH REGARD TO WORKMANSHIP AND MATERIALS FOR A PERIOD OF ONE YEAR AFTER DATE OF FINAL PAYMENT TO THE CONTRACTOR; DEFECTS WHICH ARISE DURING THE GUARANTEE PERIOD SHALL BE REPAIRED OR REPLACED BY THE CONTRACTOR AT NO EXPENSE TO THE OWNER WITHIN 30 DAYS OF RECEIVING NOTIFICATION OF THE DEFECT.

CONTRACTOR SHALL BE RESPONSIBLE FOR ADJUSTING THE EROSION CONTROL MEASURE DURING THE COURSE OF THE PROJECT.

AT THE END OF EACH WORK DAY, THE CONTRACTOR SHALL SWEEP OR CLEAN (NOT FLUSH) ANY CONSTRUCTION SOIL MATERIAL FROM THE STREET TO PREVENT TRACKING. THE ENGINEER SHALL HAVE AUTHORIZATION TO DETERMINE THE ADEQUACY OF CONTRACTOR'S EROSION CONTROL EFFORTS. THE OWNER SHALL HAVE AUTHORITY TO SUSPEND OR LIMIT THE CONTRACTOR'S OPERATIONS PENDING ADEQUATE PERFORMANCE.

DURING CONSTRUCTION OPERATIONS, THE CONTRACTOR SHALL INSURE POSITIVE SITE DRAINAGE AT THE CONCLUSION OF EACH DAY. SITE DRAINAGE MAY BE ACHIEVED BY DITCHING, PUMPING, OR ANY OTHER METHOD ACCEPTABLE TO THE ENGINEER. THE CONTRACTOR'S FAILURE TO PROVIDE THE ABOVE WILL PRECLUDE ANY POSSIBLE ADDED COMPENSATION REQUIRED DUE TO DELAYS OR UNSUITABLE MATERIALS CREATED AS A RESULT THEREOF.

ALL DUST ON-SITE SHALL BE CONTROLLED BY THE USE OF WATER BASED PRODUCTS ONLY. NO OILS OR PETROLEUM BASED AGENTS SHALL BE PERMITTED FOR DUST CONTROL.

THE APPLICABLE PORTIONS OF ARTICLE 105.07 OF THE STANDARD SPECIFICATION SHALL APPLY EXCEPT FOR THE FOLLOWING: THE CONTRACTOR SHALL BE RESPONSIBLE TO LOCATE THE VERTICAL DEPTHS OF THE UNDERGROUND UTILITIES WHICH MAY INTERFERE WITH CONSTRUCTION OPERATIONS. THIS WORK WILL NOT BE MEASURED OR PAID FOR SEPARATELY. BUT SHALL BE CONSIDERED AS INCLUDED IN THE UNIT BID PRICE FOR THE ITEM OF CONSTRUCTION INVOLVED.

THE FOLLOWING MIXTURE REQUITEMENTS ARE APPLICABLE FOR THIS PROJECT:

MIXTURE DESIGN	ALPINE ROAD	
	SURFACE	BINDER
PG:	PG 64-28	PG 64-22
DESIGN AIR VOIDS	4.0 @ N70	4.0 @ N70
MIXTURE COMPOSITION (GRADATION MIXTUTE)	IL 9.5	IL 19.0
FRICTION AGGREGATE	D	N/A
20 YEAR ESAL	4.3	4.3
MIX UNIT WEIGHT	112LBS/SY/IN	112LBS/SY/IN

THE TEMPORARY CONCRETE BARRIER SHALL BE PINNED TO THE PAVEMENT WITH 3 ANCHOR PINS PER SECTION ON THE TRAFFIC SIDE OF THE BARRIER WALL AT THE FOLLOWING LOCATIONS:

STAGE 1: RT 499+50 - 502+80 ; LT 499+50 - 502+40 ; LT 505+50 - 508+55 ; RT 505+89 - 508+55
STAGE 2: RT 499+50 - 502+73 ; LT 499+50 - 502+46 ; LT 505+57 - 508+55 ; RT 505+82 - 508+55

THE BARRIER UNIT AT EACH END SHALL BE ANCHORED AS SPECIFIED IN ARTICLE 704.04. ALL ANCHORING AND PINNING HOLES SHALL BE CORE DRILLED.

PROJECT CONTROL

VERTICAL CONTROL

BENCHMARK	STATION	ELEVATION	DESCRIPTION
WHA 400	58.19' LT 495+15.00	758.70	SW BOLT ON FH @ NW COR. OF ALPINE & RIVERSIDE
WHA 401	35.15' RT 503+17.14	774.56	CHIS. "□" SE WINGWALL OF STR.
WHA 402	44.45' RT 507+98.58	768.16	CHIS. "□" ON LP BASE E SIDE OF ALPINE 1ST LIGHT N OF STR.
WHA 403	65.46' LT 511+96.44	754.62	NW BOLT ON FH

HORIZONTAL CONTROL

POINT #	STATION	NORTHING	EASTING	ELEVATION	DESCRIPTION
WHA 9	33.29' LT 505+35.82	2061815.82	2604275.55	773.15	5/8" IPS
WHA 10	33.52' RT 507+99.23	2062060.93	2604394.59	770.62	5/8" IPS
WHA 12	501+32.21 LT 33.17	2061419.19	2604193.42	772.46	5/8" IPS
WHA 13	37.80' LT 499+21.88	2061208.00	2604162.74	767.34	5/8" IPS

SUMMARY OF QUANTITIES

CONSTRUCTION TYPE CODE: 0013

	PAY CODE	PAY ITEM NAME	UNIT	TOTAL QUANTITY
	20400800	FURNISHED EXCAVATION	CU YD	1,736
	21101615	TOPSOIL FURNISH AND PLACE, 4"	SQ YD	10,698
	25100630	EROSION CONTROL BLANKET	SQ YD	10,698
	28000250	TEMPORARY EROSION CONTROL SEEDING	POUND	200
	28000305	TEMPORARY DITCH CHECKS	FOOT	24
	28000400	PERIMETER EROSION BARRIER	FOOT	1,975
	28000500	INLET AND PIPE PROTECTION	EACH	9
*	30300112	AGGREGATE SUBGRADE IMPROVEMENT 12"	SQ YD	4,077
	35101800	AGGREGATE BASE COURSE, TYPE B 6"	SQ YD	346
	40600275	BITUMINOUS MATERIALS (PRIME COAT)	POUND	7,189
	40600290	BITUMINOUS MATERIALS (TACK COAT)	POUND	719
	40603085	HOT-MIX ASPHALT BINDER COURSE, IL-19.0, N70	TON	1,969
	40604062	HOT-MIX ASPHALT SURFACE COURSE, IL-9.5, MIX "D", N70	TON	358
	40800050	INCIDENTAL HOT-MIX ASPHALT SURFACING	TON	40

* INDICATES SPECIAL PROVISION

△ SPECIALTY ITEMS

	PAY CODE	PAY ITEM NAME	UNIT	TOTAL QUANTITY
	42000070	PAVEMENT CONNECTOR (HMA) FOR BRIDGE APPROACH SLAB	SQ YD	349
	44000100	PAVEMENT REMOVAL	SQ YD	3,640
	44000500	COMBINATION CURB AND GUTTER REMOVAL	FOOT	1,366
	44003100	MEDIAN REMOVAL	SQ FT	6,516
	50102400	CONCRETE REMOVAL	CU YD	639.5
	50104000	BRIDGE RAIL REMOVAL	FOOT	493
	50157300	PROTECTIVE SHIELD	SQ YD	1,493
*	50200100	STRUCTURE EXCAVATION	CU YD	1,067
	50300225	CONCRETE STRUCTURES	CU YD	271.1
	50300255	CONCRETE SUPERSTRUCTURE	CU YD	676.8
	50300260	BRIDGE DECK GROOVING	SQ YD	2,036
	50300300	PROTECTIVE COAT	SQ YD	2,558
	50301350	CONCRETE SUPERSTRUCTURE (APPROACH SLAB)	CU YD	190.2
*	50500305	ERECTING STRUCTURAL STEEL	L SUM	1

* INDICATES SPECIAL PROVISION

△ SPECIALTY ITEMS

WILLETT HOFMANN & ASSOCIATES INC
ENGINEERING ARCHITECTURE LAND SURVEYING
809 EAST 2ND STREET, DIXON, IL 61021-0367
T: 815-284-3381 DESIGN FIRM: #184-0009-8

DESIGNED - TBS	REVISED -	WINNEBAGO COUNTY F.A.P. 0412 (ALPINE RD) OVER FOREST HILLS RD STATION 504+16.50	SUMMARY OF QUANTITIES STRUCTURE NO. 101-3068
CHECKED - LGN	REVISED -		
DRAWN - GBG	REVISED -		
CHECKED - LGN	REVISED -		SHEET NO. 1 OF 4 SHEETS

F.A.P. RTE.	SECTION	COUNTY	TOTAL SHEETS	SHEET NO.
412	16-00620-00-BR	WINNEBAGO	109	3
	WHA* 1017D17	CONTRACT NO. 85704		
	ILLINOIS	FED. AID PROJECT 7K29(857)		

SUMMARY OF QUANTITIES

CONSTRUCTION TYPE CODE: 0013

	PAY CODE	PAY ITEM NAME	UNIT	TOTAL QUANTITY
	50500405	FURNISHING AND ERECTING STRUCTURAL STEEL	POUND	2,004
	50500505	STUD SHEAR CONNECTORS	EACH	12,080
	50800205	REINFORCEMENT BARS, EPOXY COATED	POUND	253,030
	50800515	BAR SPLICERS	EACH	2,246
	51500100	NAME PLATES	EACH	1
	52100010	ELASTOMERIC BEARING ASSEMBLY, TYPE I	EACH	40
	52100520	ANCHOR BOLTS, 1"	EACH	100
*	52200010	TEMPORARY SHEET PILING	SQ FT	6,926
*	52200015	PERMANENT SHEET PILING	SQ FT	660
*	52200800	SEGMENTAL CONCRETE BLOCK WALL	SQ FT	894
	54248510	CONCRETE COLLAR	CU YD	0.86
	550A0050	STORM SEWERS, CLASS A, TYPE 1 12"	FOOT	12
*	58600101	GRANULAR BACKFILL FOR STRUCTURES	CU YD	959
	59000200	EPOXY CRACK INJECTION	FOOT	644

* INDICATES SPECIAL PROVISION

△ SPECIALTY ITEMS

	PAY CODE	PAY ITEM NAME	UNIT	TOTAL QUANTITY
	59100100	GEOCOMPOSITE WALL DRAIN	SQ YD	140
	60260100	INLETS TO BE ADJUSTED	EACH	2
	60609800	COMBINATION CONCRETE CURB AND GUTTER, TYPE M-6.18	FOOT	54
	60610400	COMBINATION CONCRETE CURB AND GUTTER, TYPE M-6.24	FOOT	1,193
*	60619910	CONCRETE MEDIAN, TYPE SB-6.18	SQ FT	5,013
△	63000001	STEEL PLATE BEAM GUARDRAIL, TYPE A, 6 FOOT POSTS	FOOT	737.5
△	63100085	TRAFFIC BARRIER TERMINAL, TYPE 6	EACH	4
△	63100167	TRAFFIC BARRIER TERMINAL, TYPE 1 (SPECIAL) TANGENT	EACH	3
*	63200310	GUARDRAIL REMOVAL	FOOT	1,135
△ *	66900200	NON-SPECIAL WASTE DISPOSAL	CU YD	193
△ *	66900530	SOIL DISPOSAL ANALYSIS	EACH	3
△ *	66901001	REGULATED SUBSTANCES PRE-CONSTRUCTION PLAN	LSUM	1
△ *	66901003	REGULATED SUBSTANCES FINAL CONSTRUCTION REPORT	LSUM	1
△ *	66901006	REGULATED SUBSTANCES MONITORING	CAL DA	9

* INDICATES SPECIAL PROVISION

△ SPECIALTY ITEMS

SUMMARY OF QUANTITIES

CONSTRUCTION TYPE CODE: 0013

	PAY CODE	PAY ITEM NAME	UNIT	TOTAL QUANTITY
	67100100	MOBILIZATION	L SUM	1
	70300904	PAVEMENT MARKING TAPE, TYPE IV 4"	FOOT	12,953
	70400100	TEMPORARY CONCRETE BARRIER	FOOT	2,162.5
	70400200	RELOCATE TEMPORARY CONCRETE BARRIER	FOOT	1,812.5
	70600250	IMPACT ATTENUATORS, TEMPORARY (NON- REDIRECTIVE), TEST LEVEL 3	EACH	2
	70600350	IMPACT ATTENUATORS, RELOCATE (NON- REDIRECTIVE), TEST LEVEL 3	EACH	2
△	78000100	THERMOPLASTIC PAVEMENT MARKING - LETTERS AND SYMBOLS	SQ FT	31.2
△	78000200	THERMOPLASTIC PAVEMENT MARKING - LINE 4"	FOOT	840
△	78000500	THERMOPLASTIC PAVEMENT MARKING - LINE 8"	FOOT	180
△	78100100	RAISED REFLECTIVE PAVEMENT MARKER	EACH	47
	78300202	PAVEMENT MARKING REMOVAL - WATER BLASTING	SQ FT	288
△	81500100	GULFBOX JUNCTION	EACH	3
△	83600300	LIGHT POLE FOUNDATION, 30" DIAMETER	FOOT	22
△	84200804	REMOVAL OF POLE FOUNDATION	EACH	3

* INDICATES SPECIAL PROVISION

△ SPECIALTY ITEMS

	PAY CODE	PAY ITEM NAME	UNIT	TOTAL QUANTITY
*	Z0001903	STRUCTURAL STEEL REMOVAL	POUND	412,955
*	Z0001905	STRUCTURAL STEEL REPAIR	POUND	9,672
*	Z0003802	REMOVAL OF EXISTING BEARINGS	EACH	50
△ *	Z0007101	CONTAINMENT AND DISPOSAL OF LEAD PAINT CLEANING RESIDUES NO. 1	L SUM	1
△ *	Z0010501	CLEANING AND PAINTING STEEL BRIDGE NO. 1	L SUM	1
*	Z0012754	STRUCTURAL REPAIR OF CONCRETE (DEPTH EQUAL TO OR LESS THAN 5 INCHES)	SQ FT	142
*	Z0012755	STRUCTURAL REPAIR OF CONCRETE (DEPTH GREATER THAN 5 INCHES)	SQ FT	2.5
*	Z0013797	STABILIZED CONSTRUCTION ENTRANCE	SQ YD	171
*	Z0013798	CONSTRUCTION LAYOUT	L SUM	1
*	Z0018002	DRAINAGE SCUPPERS, DS-11	EACH	4
*	Z0024475	TUBULAR MARKER	EACH	140
*	Z0028416	GEOTECHNICAL REINFORCEMENT	L SUM	1
#	Z0076600	TRAINEES	HOUR	1,000
*	Z0046304	PIPE UNDERDRAINS FOR STRUCTURES 4"	FOOT	317
#	Z0076604	TRAINEES TRAINING PROGRAM GRADUATE	HOUR	1,000
*	Z0065700	SLOPE WALL REPAIR	SQ YD	17

* INDICATES SPECIAL PROVISION

△ SPECIALTY ITEMS

0042

WILLETT HOFMANN & ASSOCIATES INC
ENGINEERING ARCHITECTURE LAND SURVEYING
809 EAST 2ND STREET, DIXON, IL 61021-0367
T: 815-284-3381 DESIGN FIRM: #184-0009-6

DESIGNED - TBS	REVISED -		
CHECKED - LGN	REVISED -		
DRAWN - GBG	REVISED -		
CHECKED - LGN	REVISED -		

WINNEBAGO COUNTY
F.A.P. 0412 (ALPINE RD) OVER FOREST HILLS RD
STATION 504+16.50

SUMMARY OF QUANTITIES
STRUCTURE NO. 101-3068
SHEET NO. 3 OF 4 SHEETS

F.A.P. RTE.	SECTION	COUNTY	TOTAL SHEETS	SHEET NO.
412	16-00620-00-BR	WINNEBAGO	109	5
	WHA* 1017D17	CONTRACT NO. 85704		
	(ILLINOIS) FED. AID PROJECT 7K29(857)			

SUMMARY OF QUANTITIES

CONSTRUCTION TYPE CODE: 0013

	PAY CODE	PAY ITEM NAME	UNIT	TOTAL QUANTITY
Δ *	X0324915	RELOCATE LIGHTING UNITS AND POLES	EACH	3
*	X0325391	EXPANDED POLYSTYRENE FILL	CU YD	196
*	X2020410	EARTH EXCAVATION (SPECIAL)	CU YD	813
*	X2500920	SEEDING, CLASS 1A (SPECIAL)	ACRE	2.00
*	X6023840	REMOVE AND RELOCATE INLETS	EACH	4
*	X6061930	CONCRETE MEDIAN, TYPE SB-6.18 (MODIFIED)	SQ FT	1,342
*	X7010216	TRAFFIC CONTROL AND PROTECTION, (SPECIAL)	L SUM	1
*	X7030005	TEMPORARY PAVEMENT MARKING REMOVAL	SQ FT	4,317
*	X7040125	PINNING TEMPORARY CONCRETE BARRIER	EACH	575

* INDICATES SPECIAL PROVISION

Δ SPECIALTY ITEMS

✱ ✱ ALPINE ROAD SUPERELEVATION RATES			
STATION	LEFT SUPER	RIGHT SUPER	REMARKS
506+21.03	-1.56%	-1.56%	NORMAL CROWN
506+56.03	-1.56%	0.00%	
506+91.03	-1.56%	+1.56%	FULL SUPER
507+45.03	-4.00%	+4.00%	MAX SUPER
508+55.00	-4.00%	+4.00%	MATCH EXISTING

PC 507+14.03
PT 512+79.11

① GUARDRAIL SHALL BE INSTALL BASED ON FINAL ELEVATION OF PAVEMENT LOCATED FROM:

LT STA. 499+50.00 - 502+41.69
RT STA. 500+80.88 - 503+15.46
LT STA. 505+15.04 - 507+73.79
RT STA. 505+88.81 - 508+69.85

② SEGMENTAL CONCRETE BLOCK WALL LOCATED FROM:

LT STA. 505+17.50 - 506+99.75

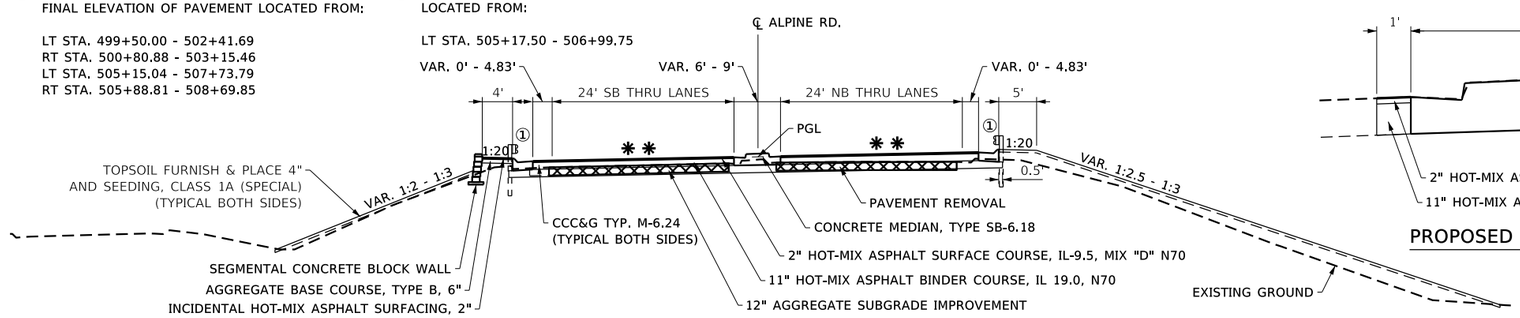

PROPOSED TYPICAL SECTION - ALPINE ROAD

STA. 505+40.92 - STA. 508+55.00

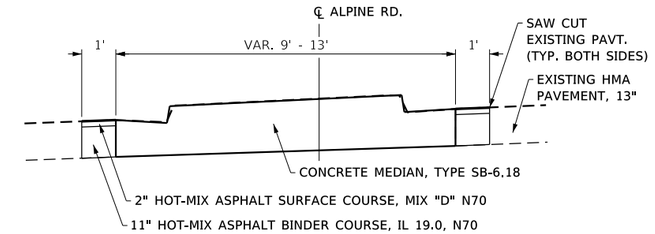

PROPOSED TYPICAL SECTION - ALPINE ROAD

STA. 508+55.00 - 510+50.00

✱ ALPINE ROAD SUPERELEVATION RATES			
STATION	LEFT SUPER	RIGHT SUPER	REMARKS
499+50.00	+4.00%	-4.00%	MATCH EXISTING
501+76.12	+4.00%	-4.00%	MAX SUPER
502+30.12	+1.56%	-1.56%	FULL SUPER
502+65.12	0.00%	-1.56%	
503+00.12	-1.56%	-1.56%	NORMAL CROWN

PC 496+87.36
PT 502+38.12

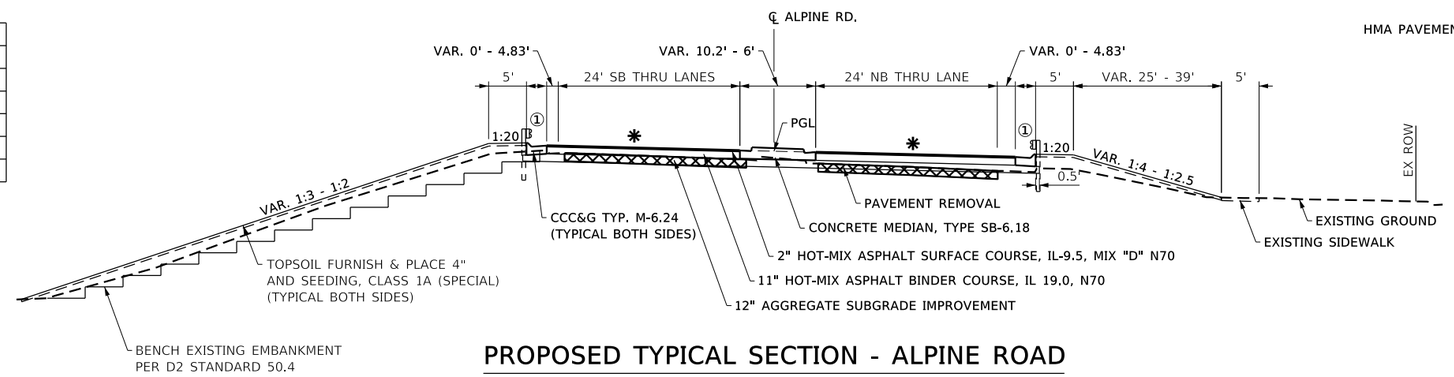

PROPOSED TYPICAL SECTION - ALPINE ROAD

STA. 501+44.00 - STA. 502+89.58
(BRIGE OMITTED STA. 502+89.58 - 505+40.92)

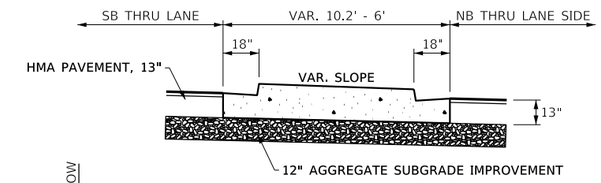

CONCRETE MEDIAN TYPE SB-6.18 DETAIL

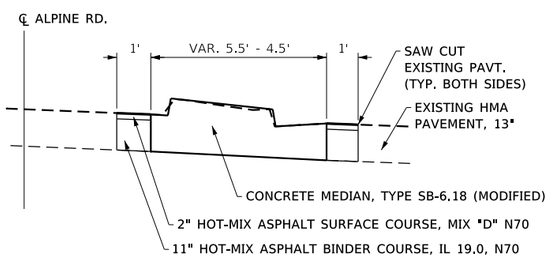

PROPOSED TYPICAL SECTION - ALPINE ROAD

STA. 499+00.00 - 499+50.00

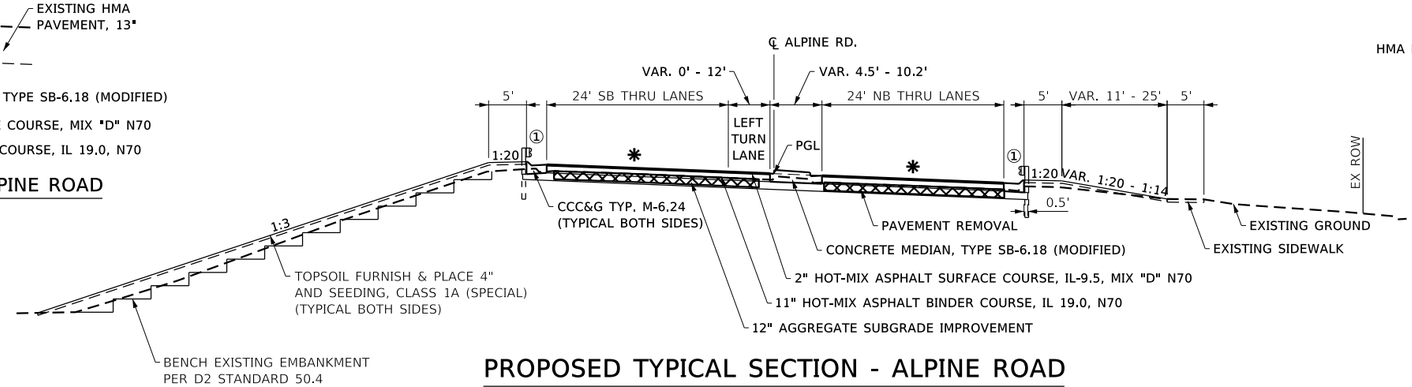

PROPOSED TYPICAL SECTION - ALPINE ROAD

STA. 499+50.00 - STA. 501+44.00

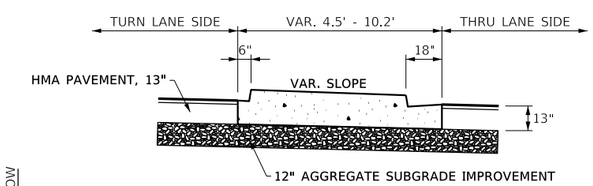

CONCRETE MEDIAN TYPE SB-6.18 (MODIFIED) DETAIL

WILLETT HOFMANN & ASSOCIATES INC
ENGINEERING ARCHITECTURE LAND SURVEYING
809 EAST 2ND STREET, DIXON, IL 61021-0367
T: 815-284-3381 DESIGN FIRM: #184-000918

DESIGNED - LGN	REVISED -		
CHECKED - GFS	REVISED -		
DRAWN - TBS	REVISED -		
CHECKED - LGN	REVISED -		

WINNEBAGO COUNTY
F.A.P. 0412 (ALPINE RD) OVER FOREST HILLS RD
STATION 504+16.50

TYPICAL SECTIONS
STRUCTURE NO. 101-3068
SHEET NO. 1 OF 1 SHEETS

F.A.P. RTE.	SECTION	COUNTY	TOTAL SHEETS	SHEET NO.
412	16-00620-00-BR	WINNEBAGO	109	7
	WHA* 1017D17	CONTRACT NO. 85704		
	ILLINOIS FED. AID PROJECT 7K29(857)			

SCHEDULE OF QUANTITIES

EARTHWORK SCHEDULE

LOCATION	EARTH EXCAVATION 20200100 (CU YD)	EARTH EXCAVATION ADJUSTED FOR SHRINKAGE 25%	EMBANKMENT	EARTH BALANCE WASTE (+) OR FURNISHED EXCAVATION (-) 20400800 (CU YD)
ALPINE ROAD	813	610	2,346	-1,736
TOTALS	813	610	2,346	-1,736

TOPSOIL FURNISH AND PLACE, 4"

STATION	SQ YD	REMARKS
F.A.U. 412 (ALPINE ROAD)		
LT 499+50 - 503+25	2,563	
RT 499+50 - 504+60	1,659	
LT 503+66 - 508+55	1,583	
RT 505+08 - 5089+00	4,893	
PROJECT TOTAL	10,698	

21101615

TEMPORARY EROSION CONTROL SEEDING

STATION	POUND	REMARKS
F.A.U. 412 (ALPINE ROAD)		
ENTIRE PROJECT	200	100 LBS. / ACRE
PROJECT TOTAL	200	

28000250

EROSION CONTROL BLANKET

STATION	SQ YD	REMARKS
F.A.U. 412 (ALPINE ROAD)		
LT 499+50 - 503+25	2,563	
RT 499+50 - 504+60	1,659	
LT 503+66 - 508+55	1,583	
RT 505+08 - 5089+00	4,893	
PROJECT TOTAL	10,698	

25100630

TEMPORARY DITCH CHECKS

STATION	FOOT	REMARKS
F.A.U. 412 (ALPINE ROAD)		
LT 505+00	6	
LT 506+00	6	
LT 507+00	6	
LT 508+00	6	
PROJECT TOTAL	24	

28000305

PERIMETER EROSION BARRIER

STATION	FOOT	REMARKS
F.A.U. 412 (ALPINE ROAD)		
LT 499+50 - 502+94	367	
RT 499+50 - 504+60	507	
LT 503+66 - 508+55	485	
RT 505+08 - 506+95	247	
RT 507+04 - 509+00	369	
PROJECT TOTAL	1,975	

28000400

INLET AND PIPE PROTECTION

STATION	EACH	REMARKS
F.A.U. 412 (ALPINE ROAD)		
LT 498+54	1	
LT 498+64	1	
LT 501+49	1	
RT 501+50	1	
RT 506+69	1	
RT 506+75	1	
LT 506+76	1	
LT 508+40	1	
RT 508+40	1	
PROJECT TOTAL	9	

28000500

AGGREGATE SUBGRADE IMPROVEMENT 12"

STATION	SQ YD	REMARKS
F.A.U. 412 (ALPINE ROAD)		
LT & RT 499+50 - 502+55	2,215	
LT & RT 505+76 - 508+55	1,862	
PROJECT TOTAL	4,077	

30300112*

AGGREGATE BASE COURSE, TYPE B 6"

STATION	SQ YD	REMARKS
F.A.U. 412 (ALPINE ROAD)		
RT 499+00 - 499+50	44	CONC. MEDIAN, TYPE SB-6.18 (MODIFIED)
LT + RT 508+55 - 510+50	302	CONCRETE MEDIAN, TYPE SB-6.18
PROJECT TOTAL	346	

35101800

BITUMINOUS MATERIALS (PRIME COAT)

STATION	POUND	REMARKS
F.A.U. 412 (ALPINE ROAD)		
LT 499+50 - 502+13	2,053	0.25 LB/SF 1 APP ON AGG
RT 499+50 - 502+55	1,888	0.25 LB/SF 1 APP ON AGG
LT 505+76 - 508+55	1,726	0.25 LB/SF 1 APP ON AGG
RT 506+18 - 508+55	1,522	0.25 LB/SF 1 APP ON AGG
PROJECT TOTAL	7,189	

40600275

BITUMINOUS MATERIALS (TACK COAT)

STATION	POUND	REMARKS
F.A.U. 412 (ALPINE ROAD)		
LT 499+50 - 502+13	205	0.025 LB/SF 1 APP ON BIT
RT 499+50 - 502+55	189	0.025 LB/SF 1 APP ON BIT
LT 505+76 - 508+55	173	0.025 LB/SF 1 APP ON BIT
RT 506+18 - 508+55	152	0.025 LB/SF 1 APP ON BIT
PROJECT TOTAL	719	

40600290

HOT-MIX ASPHALT BINDER COURSE, IL-19.0, N70

STATION	TON	REMARKS
F.A.U. 412 (ALPINE ROAD)		
LT 499+50 - 502+13	562	11 INCH
RT 499+50 - 502+55	517	11 INCH
LT 505+76 - 508+55	473	11 INCH
RT 506+18 - 508+55	417	11 INCH
PROJECT TOTAL	1,969	

40603085

HOT-MIX ASPHALT SURFACE COURSE, IL-9.5, MIX "D", N70

STATION	TON	REMARKS
F.A.U. 412 (ALPINE ROAD)		
LT 499+50 - 502+13	102	2 INCH
RT 499+50 - 502+55	94	2 INCH
LT 505+76 - 508+55	86	2 INCH
RT 506+18 - 508+55	76	2 INCH
PROJECT TOTAL	358	

4060462

WILLETT HOFMANN & ASSOCIATES INC
ENGINEERING ARCHITECTURE LAND SURVEYING
809 EAST 2ND STREET, DIXON, IL 61021-0367
T: 815-284-3381 DESIGN FIRM: #184-000918

DESIGNED - TBS	REVISED -		
CHECKED - LGN	REVISED -		
DRAWN - GFS	REVISED -		
CHECKED - LGN	REVISED -		

WINNEBAGO COUNTY
F.A.P. 0412 (ALPINE RD) OVER FOREST HILLS RD
STATION 504+16.50

SCHEDULE OF QUANTITIES
STRUCTURE NO. 101-3068

SHEET NO. 1 OF 4 SHEETS

F.A.P. RTE.	SECTION	COUNTY	TOTAL SHEETS	SHEET NO.
412	16-00620-00-BR	WINNEBAGO	109	8
	WHA* 1017D17	CONTRACT NO. 85704		
	ILLINOIS	FED. AID PROJECT 7K29(857)		

SCHEDULE OF QUANTITIES

INCIDENTAL HOT-MIX ASPHALT SURFACING

STATION	TON	REMARKS
F.A.U. 412 (ALPINE ROAD)		
LT 499+00 - 499+50	8	13 INCH
LT 508+55 - 510+50	16	13 INCH
RT 508+55 - 510+50	16	13 INCH
PROJECT TOTAL	40	
40800050		

PAVEMENT CONNECTOR (HMA) FOR BRIDGE APPROACH SLAB

STATION	SQ YD	REMARKS
F.A.U. 412 (ALPINE ROAD)		
LT 502+13 - 502+58	92	
RT 502+55 - 502+96	82	
LT 505+34 - 505+76	83	
RT 505+73 - 506+18	92	
PROJECT TOTAL	349	
42000070		

PAVEMENT REMOVAL

STATION	SQ YD	REMARKS
F.A.U. 412 (ALPINE ROAD)		
LT 499+50 - 502+87	1,032	
RT 499+50 - 503+20	941	
LT 505+10 - 508+55	876	
RT 505+44 - 508+55	791	
PROJECT TOTAL	3,640	
44000100		

COMBINATION CURB AND GUTTER REMOVAL

STATION	FOOT	REMARKS
F.A.U. 412 (ALPINE ROAD)		
LT 499+50 - 502+58	308	
RT 499+50 - 503+24	374	
LT 505+07 - 508+55	348	
RT 505+73 - 508+55	282	
RT 506+47 - 506+90	54	FOREST HILLS ROAD
PROJECT TOTAL	1,366	
44000500		

MEDIAN REMOVAL

STATION	SQ FT	REMARKS
F.A.U. 412 (ALPINE ROAD)		
499+00 - 502+71	2,309	
505+59 - 510+50	4,207	
PROJECT TOTAL	6,516	
44003100		

CONCRETE COLLAR

STATION	CU YD	REMARKS
F.A.U. 412 (ALPINE ROAD)		
LT 501+49	0.43	
RT 506+75	0.43	
PROJECT TOTAL	0.86	
54248510		

STORM SEWERS, CLASS A, TYPE 1 12"

STATION	FOOT	REMARKS
F.A.U. 412 (ALPINE ROAD)		
LT 501+49	6	
RT 506+75	6	
PROJECT TOTAL	12	
550A0050		

INLETS TO BE ADJUSTED

STATION	EACH	REMARKS
F.A.U. 412 (ALPINE ROAD)		
30' LT 508+40	1	
2' RT 508+40	1	
PROJECT TOTAL	2	
60260100		

COMBINATION CONCRETE CURB AND GUTTER, TYPE M-6.18

STATION	FOOT	REMARKS
F.A.U. 412 (ALPINE ROAD)		
LT 499+50 - 500+73	54	FOREST HILLS ROAD
PROJECT TOTAL	54	
60609800		

COMBINATION CONCRETE CURB AND GUTTER, TYPE M-6.24

STATION	FOOT	REMARKS
F.A.U. 412 (ALPINE ROAD)		
LT 499+50 - 500+73	125	
RT 499+50 - 501+44	191	
LT 500+73 - 501+97	125	
RT 501+44 - 504+70	125	
LT 501+97 - 502+24	27	
RT 504+70 - 504+99	29	
LT 505+31 - 505+61	29	
RT 506+08 - 506+34	27	
LT 505+61 - 506+86	125	
RT 506+34 - 507+59	125	
LT 506+86 - 508+55	168	
RT 507+59 - 508+55	97	
PROJECT TOTAL	1,193	
60610400		

CONCRETE MEDIAN, TYPE SB-6.18

STATION	SQ FT	REMARKS
F.A.U. 412 (ALPINE ROAD)		
LT & RT 501+44 - 502+61	922	
LT & RT 505+69 - 510+50	4,091	
PROJECT TOTAL	5,013	
60619910		

STEEL PLATE BEAM GUARDRAIL, TYPE A, 6 FOOT POSTS

STATION	FOOT	REMARKS
F.A.U. 412 (ALPINE ROAD)		
LT 499+50 - 502+00	250	
RT 501+31 - 502+70	137.5	
LT 505+58 - 507+23	162.5	
RT 506+31 - 508+20	187.5	
PROJECT TOTAL	737.5	
63000001		

TRAFFIC BARRIER TERMINAL, TYPE 6

STATION	EACH	REMARKS
F.A.U. 412 (ALPINE ROAD)		
LT 502+00 - 502+40	1	
RT 502+70 - 503+10	1	
LT 504+18 - 505+58	1	
RT 505+91 - 506+31	1	
PROJECT TOTAL	4	
63000001		

SCHEDULE OF QUANTITIES

TRAFFIC BARRIER TERMINAL, TYPE 1 (SPECIAL) TANGENT

STATION	EACH	REMARKS
F.A.U. 412 (ALPINE ROAD)		
RT 501+81 - 501+31	1	
LT 507+23 - 507+73	1	
RT 508+20 - 508+70	1	
PROJECT TOTAL	3	

63100167

GUARDRAIL REMOVAL

STATION	FOOT	REMARKS
F.A.U. 412 (ALPINE ROAD)		
LT 499+50 - 502+54	304	
RT 500+88 - 503+50	262	
LT 504+80 - 507+60	280	
RT 505+77 - 508+66	289	
PROJECT TOTAL	1,135	

63200310

PAVEMENT MARKING TAPE, TYPE IV 4"

STATION	FOOT	REMARKS
ALPINE ROAD		
RT 493+15 - 497+50	435	YELLOW - STAGE I
RT 493+75 - 497+69	399	WHITE - STAGE I
RT 498+21 - 510+99	1,286	WHITE - STAGE I
LT 498+39 - 510+01	1,164	WHITE - STAGE I
LT 498+39 - 499+00	125	WHITE - STAGE I
LT 498+39 - 516+00	1,762	YELLOW - STAGE I
RT 498+39 - 511+49	1,322	YELLOW - STAGE I
RT 493+15 - 497+50	435	YELLOW - STAGE II
RT 493+75 - 497+72	408	WHITE - STAGE II
RT 498+20 - 511+70	1,363	WHITE - STAGE II
LT 498+39 - 513+75	1,536	WHITE - STAGE II
RT 489+39 - 500+90	398	YELLOW - STAGE II
LT 498+49 - 500+90	242	YELLOW - STAGE II
LT & RT 500+90 - 508+55	1,243	DOUBLE YELLOW - STAGE II
LT 508+55 - 513+75	520	YELLOW - STAGE II
RT 508+55 - 511+70	315	YELLOW - STAGE II
PROJECT TOTAL	12,953	

7030094

TEMPORARY CONCRETE BARRIER

STATION	FOOT	REMARKS
ALPINE ROAD		
RT 499+87 - 510+47	1,050.0	STAGE I
LT 499+51 - 510+61	1,112.5	STAGE I
PROJECT TOTAL	2,162.5	

70400100

RELOCATE TEMPORARY CONCRETE BARRIER

STATION	FOOT	REMARKS
ALPINE ROAD		
RT 499+87 - 508+55	875.0	STAGE II
LT 499+46 - 508+83	937.5	STAGE II
PROJECT TOTAL	1,812.5	

70400200

IMPACT ATTENUATORS, TEMPORARY (NON- REDIRECTIVE), TEST LEVEL 3

STATION	EACH	REMARKS
ALPINE ROAD		
RT 499+87	1	STAGE I
LT 510+61	1	STAGE I
PROJECT TOTAL	2	

70600250

IMPACT ATTENUATORS, RELOCATE (NON- REDIRECTIVE), TEST LEVEL 3

STATION	EACH	REMARKS
ALPINE ROAD		
RT 499+87	1	STAGE II
LT 508+83	1	STAGE II
PROJECT TOTAL	2	

70600350

THERMOPLASTIC PAVEMENT MARKING LETTERS AND SYMBOLS

STATION	SQ FT	REMARKS
F.A.U. 412 (ALPINE ROAD)		
LT 498+66	15.6	LT TURN ARROW
LT 499+76	15.6	LT TURN ARROW
PROJECT TOTAL	31.2	

78000100

THERMOPLASTIC PAVEMENT MARKING - LINE 4"

STATION	FOOT	REMARKS
F.A.U. 412 (ALPINE ROAD)		
RT 439+15 - 497+25	110	10' SKIP DASH LINE, 40' O.C.
LT 498+72 - 514+45	400	10' SKIP DASH LINE, 40' O.C.
RT 498+69 - 511+61	330	10' SKIP DASH LINE, 40' O.C.
PROJECT TOTAL	840	

78000200

THERMOPLASTIC PAVEMENT MARKING - LINE 8"

STATION	FOOT	REMARKS
F.A.U. 412 (ALPINE ROAD)		
LT 498+45 - 499+85	140	SOLID WHITE
LT 499+85 - 501+39	40	2' SKIP DASH WHITE, 8' O.C.
PROJECT TOTAL	180	

78000500

RAISED REFLECTIVE PAVEMENT MARKER

STATION	EACH	REMARKS
F.A.U. 412 (ALPINE ROAD)		
RT 495+15 - 497+00	5	ONE-WAY CRYSTAL MARKER @ 80' O.C.
LT 498+46 - 499+87	8	ONE-WAY CRYSTAL MARKER @ 20' O.C.
RT 489+94 - 510+17	15	ONE-WAY CRYSTAL MARKER @ 80' O.C.
LT 499+75 - 513+13	19	ONE-WAY CRYSTAL MARKER @ 80' O.C.
PROJECT TOTAL	47	

78100100

PAVEMENT MARKING REMOVAL - WATER BLASTING

STATION	SQ FT	REMARKS
F.A.U. 412 (ALPINE ROAD)		
RT 493+15 - 497+25	110	EXISTING SKIP DASH
LT 498+45 - 499+85	94	EXISTING LT TURN LANE
RT 498+69 - 499+50	7	EXISTING SKIP DASH
RT 508+55 - 511+61	27	EXISTING SKIP DASH
LT 508+55 - 514+45	50	EXISTING SKIP DASH
PROJECT TOTAL	288	

78300202

GULFBOX JUNCTION

STATION	EACH	REMARKS
F.A.U. 412 (ALPINE ROAD)		
LT 500+95	1	
RT 502+45	1	
LT 505+49	1	
PROJECT TOTAL	3	

81500100

SCHEDULE OF QUANTITIES

LIGHT POLE FOUNDATION, 30" DIAMETER

STATION	FOOT	REMARKS
F.A.U. 412 (ALPINE ROAD)		
LT 500+95	7	
RT 502+45	7	
LT 505+49	8	
PROJECT TOTAL	22	
83600300		

REMOVAL OF POLE FOUNDATION

STATION	EACH	REMARKS
F.A.U. 412 (ALPINE ROAD)		
LT 500+95	1	
RT 502+45	1	
LT 505+49	1	
PROJECT TOTAL	3	
84200804		

STABILIZED CONSTRUCTION ENTRANCE

STATION	SQ YD	REMARKS
F.A.U. 412 (ALPINE ROAD)		
RT 506+68	171	FOREST HILLS ROAD
PROJECT TOTAL	171	
Z0013797*		

TUBULAR MARKER

STATION	EACH	REMARKS
F.A.U. 412 (ALPINE ROAD)		
500+90 - 509+25	140	STAGE II CL (6' CENTERS)
PROJECT TOTAL	140	
Z0024475*		

RELOCATE LIGHTING UNITS AND POLES

STATION	EACH	REMARKS
F.A.U. 412 (ALPINE ROAD)		
LT 500+95	1	
RT 502+45	1	
LT 505+49	1	
PROJECT TOTAL	3	
X0324915*		

SEEDING, CLASS 1A (SPECIAL)

STATION	ACRE	REMARKS
F.A.U. 412 (ALPINE ROAD)		
LT 499+50 - 503+25	0.53	
RT 499+50 - 504+60	0.34	
LT 503+66 - 508+55	0.33	
RT 505+08 - 508+55	1.01	
PROJECT TOTAL	2.00	
X2500920*		

REMOVE AND RELOCTE INLETS

STATION	EACH	REMARKS
F.A.U. 412 (ALPINE ROAD)		
3' LT 501+49	1	
30' RT 501+50	1	
30' RT 506+75	1	
28' LT 506+76	1	
PROJECT TOTAL	4	
X6023840*		

CONCRETE MEDIAN, TYPE SB-6.18 (MODIFIED)

STATION	SQ FT	REMARKS
F.A.U. 412 (ALPINE ROAD)		
LT & RT 499+00 - 501+44	1,342	
PROJECT TOTAL	1,342	
X6061930*		

TEMPORARY PAVEMENT MARKING REMOVAL

STATION	SQ FT	REMARKS
ALPINE ROAD		
STAGE 1	2,164	4" LINES
STAGE 2	2,153	4" LINES
PROJECT TOTAL	4,317	
X7030005*		

PINNING TEMPORARY CONCRETE BARRIER

STATION	EACH	REMARKS
ALPINE ROAD		
RT 499+50 - 502+80	80	STAGE 1
LT 499+50 - 502+40	70	STAGE 1
LT 505+50 - 508+55	74	STAGE 1
RT 505+89 - 508+55	64	STAGE 1
RT 499+50 - 502+73	78	STAGE 2
RT 499+50 - 502+46	71	STAGE 2
LT 505+57 - 508+55	72	STAGE 2
RT 508+82 - 508+55	66	STAGE 2
PROJECT TOTAL	575	
X7040125*		

WILLETT HOFMANN & ASSOCIATES INC
ENGINEERING ARCHITECTURE LAND SURVEYING
809 EAST 2ND STREET, DIXON, IL 61021-0367
T: 815-284-3381 DESIGN FIRM: #184-000918

DESIGNED - TBS	REVISED -		
CHECKED - LGN	REVISED -		
DRAWN - GFS	REVISED -		
CHECKED - LGN	REVISED -		

WINNEBAGO COUNTY
F.A.P. 0412 (ALPINE RD) OVER FOREST HILLS RD
STATION 504+16.50

SCHEDULE OF QUANTITIES
STRUCTURE NO. 101-3068

SHEET NO. 4 OF 4 SHEETS

F.A.P. RTE.	SECTION	COUNTY	TOTAL SHEETS	SHEET NO.
412	16-00620-00-BR	WINNEBAGO	109	11
	WHA* 1017D17	CONTRACT NO. 85704		
	ILLINOIS	FED. AID PROJECT 7K29(857)		

FILE = S:\PROJECTS\2017\1017D17_WNCH\DESIGN\CAD_SHEETS\1017D17_Schedule.dgn
PRINT_ORGANIZER_BW.pltcfg 11/4/2020 2:29:05 PM = PLOTTED

HORIZONTAL CONTROL					
POINT #	STATION	NORTHING	EASTING	ELEVATION	DESCRIPTION
WHA 9	33.29' LT 505+35.82	2061815.82	2604275.55	773.15	5/8" IPS
WHA 10	33.52' RT 507+99.23	2062060.93	2604394.59	770.62	5/8" IPS
WHA 12	33.17' LT 501+32.21	2061419.19	2604193.42	772.46	5/8" IPS
WHA 13	37.80' LT 499+21.88	2061208.00	2604162.74	767.34	5/8" IPS

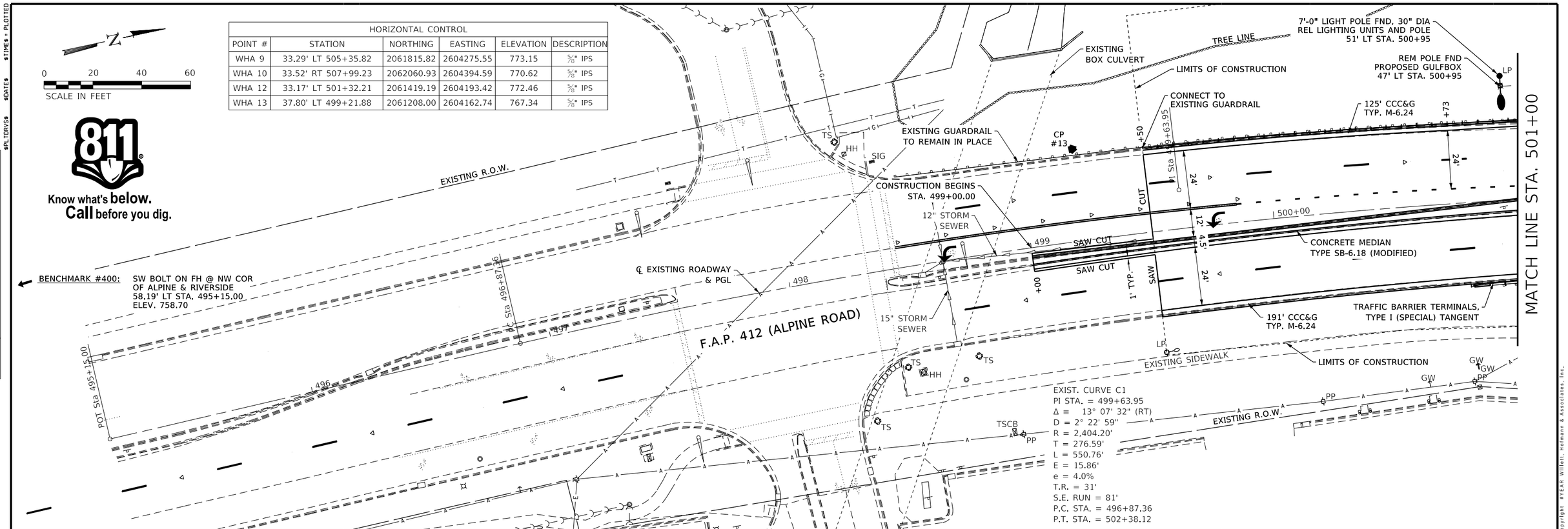

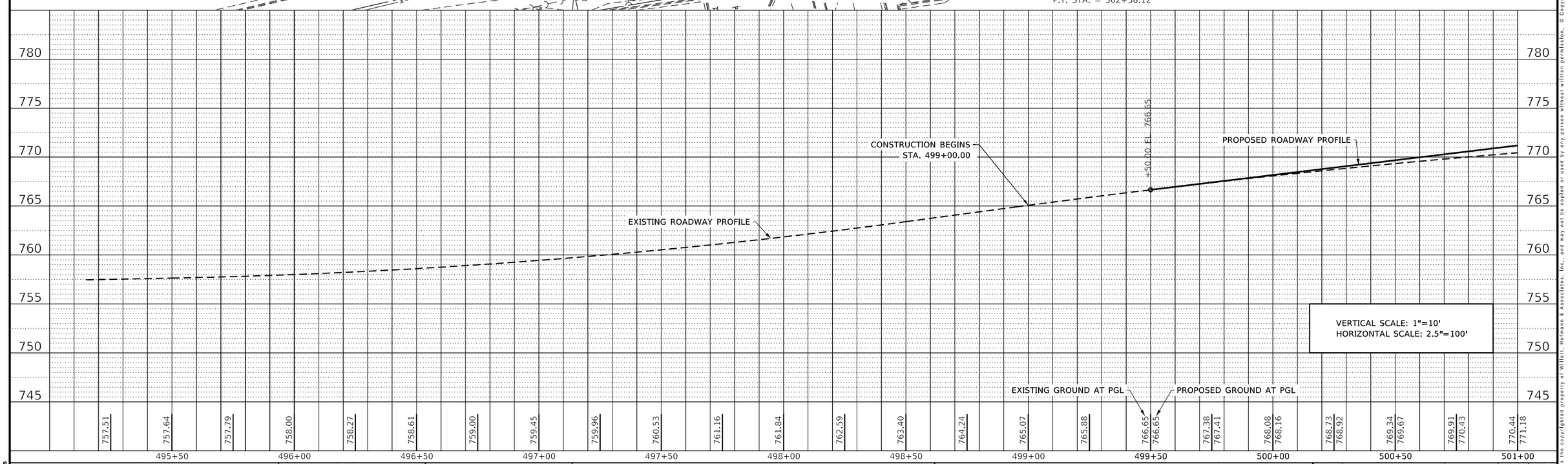

PLAN — SURVEYED / PLOTTED / ALIGNMENT CHECKED / RT. OF WAY CHECKED / CADD FILE NAME / NOTE BOOK NO. / BY / DATE

PROFILE — SURVEYED / PLOTTED / GRADES CHECKED / BM. NOTED / STRUCTURE NOTAT'NS CHKD / NOTE BOOK NO. / BY / DATE

$PLTDRV$ $DATE$ $TIME$ = PLOTTED

FILE = $FILE$

WILLETT HOFMANN & ASSOCIATES INC
ENGINEERING ARCHITECTURE LAND SURVEYING
809 EAST 2ND STREET, DIXON, IL 61021-0367
T: 815-284-3381 DESIGN FIRM#: #184-000918

DESIGNED - LGN	REVISED -		
CHECKED - GFS	REVISED -		
DRAWN - TBS	REVISED -		
CHECKED - LGN	REVISED -		

WINNEBAGO COUNTY
F.A.P. 0412 (ALPINE RD) OVER FOREST HILLS RD
STATION 504+16.50

PLAN AND PROFILE
STRUCTURE NO. 101-3068
SHEET NO. 1 OF 3 SHEETS

F.A.P. RTE.	SECTION	COUNTY	TOTAL SHEETS	SHEET NO.
412	16-00620-00-BR	WINNEBAGO	109	12
	WHA* 1017D17	CONTRACT NO. 85704		
		ILLINOIS FED. AID PROJECT 7K29(857)		

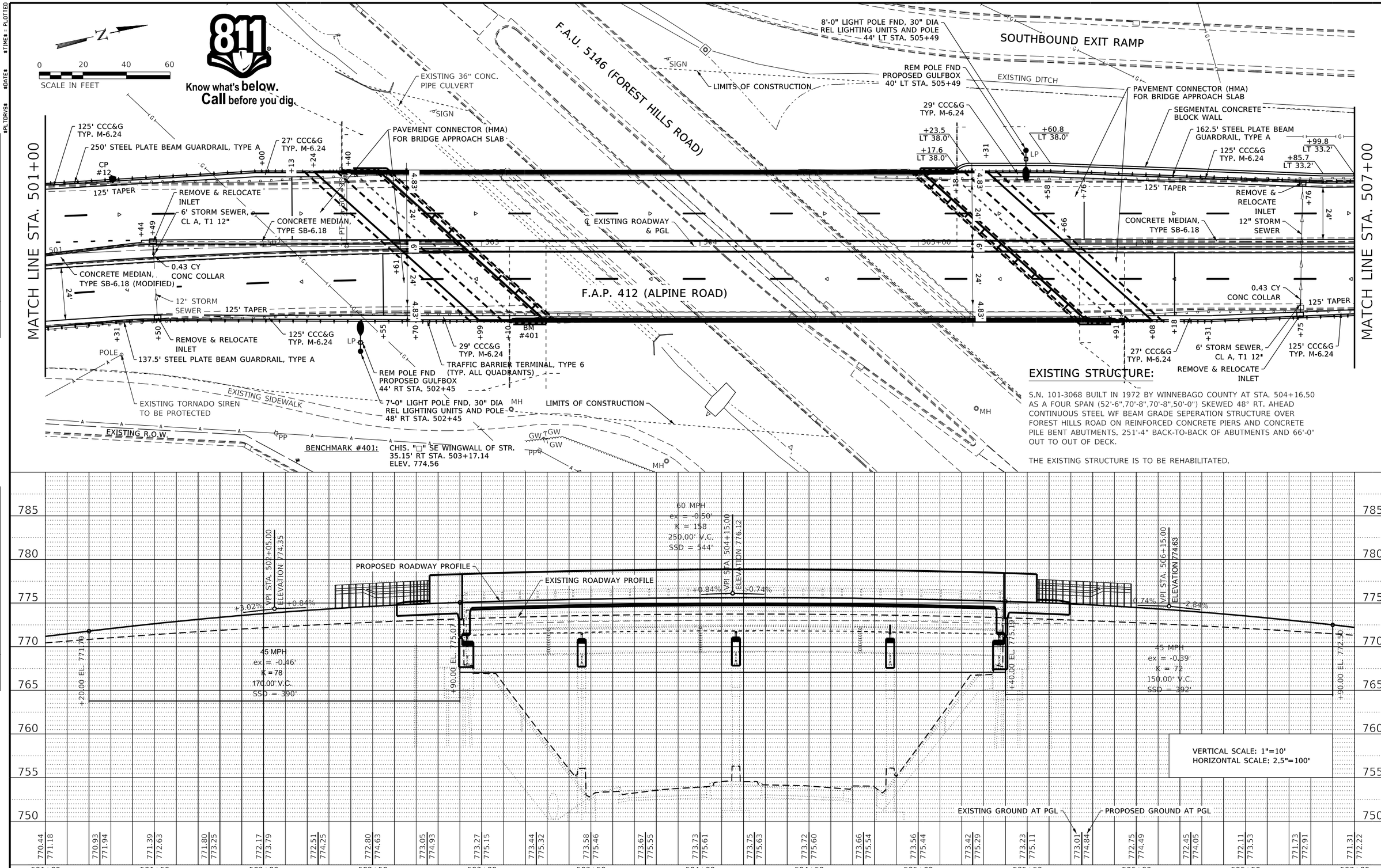

PLAN — SURVEYED / PLOTTED / ALIGNMENT CHECKED / RT. OF WAY CHECKED / CADD FILE NAME / NOTE BOOK NO. / DATE / BY

PROFILE — SURVEYED / PLOTTED / GRADES CHECKED / B.M. NOTED / STRUCTURE NOTATNS CHKD / NOTE BOOK NO. / DATE / BY

$PLTDRV$ $DATE$ $TIME$ = PLOTTED

FILE = $FILEL$

WILLETT HOFMANN & ASSOCIATES INC
ENGINEERING ARCHITECTURE LAND SURVEYING
809 EAST 2ND STREET, DIXON, IL 61021-0367
T: 815-284-3381 DESIGN FIRM: #184-000918

DESIGNED - LGN	REVISED -		
CHECKED - GFS	REVISED -		
DRAWN - TBS	REVISED -		
CHECKED - LGN	REVISED -		

WINNEBAGO COUNTY
F.A.P. 0412 (ALPINE RD) OVER FOREST HILLS RD
STATION 504+16.50

PLAN AND PROFILE
STRUCTURE NO. 101-3068
SHEET NO. 2 OF 3 SHEETS

F.A.P. RTE.	SECTION	COUNTY	TOTAL SHEETS	SHEET NO.
412	16-00620-00-BR	WINNEBAGO	109	13
	WHA* 1017D17	CONTRACT NO. 85704		
	ILLINOIS FED. AID PROJECT 7K29(857)			

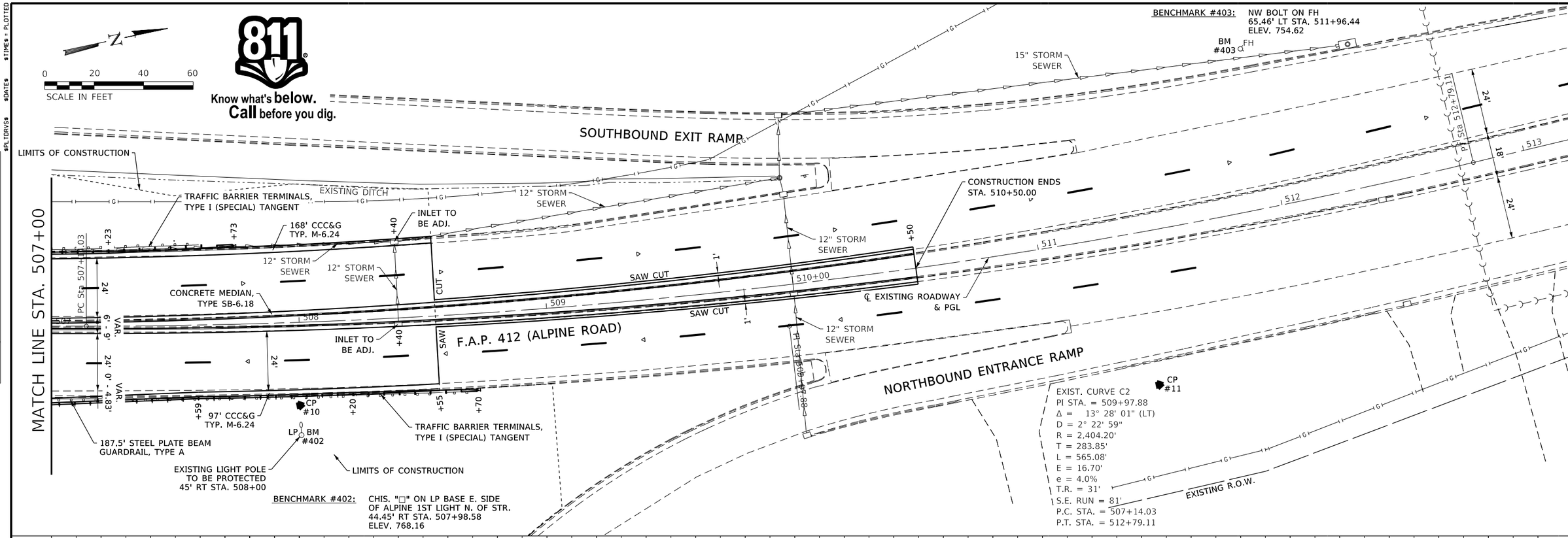

PLAN — SURVEYED / PLOTTED / ALIGNMENT CHECKED / RT. OF WAY CHECKED / CADD FILE NAME — NOTE BOOK NO. ____ — BY — DATE

PROFILE — SURVEYED / PLOTTED / GRADES CHECKED / B.M. NOTED / STRUCTURE NOTAT'NS CH'KD — NOTE BOOK NO. ____ — BY — DATE

$PLTDRV$ $DATE$ $TIME$ = PLOTTED

FILE = $FILEL$

WILLETT HOFMANN & ASSOCIATES INC
ENGINEERING ARCHITECTURE LAND SURVEYING
809 EAST 2ND STREET, DIXON, IL 61021-0367
T: 815-284-3381 DESIGN FIRM: #184-000918

DESIGNED - LGN	REVISED -		
CHECKED - GFS	REVISED -		
DRAWN - TBS	REVISED -		
CHECKED - LGN	REVISED -		

WINNEBAGO COUNTY
F.A.P. 0412 (ALPINE RD) OVER FOREST HILLS RD
STATION 504+16.50

PLAN AND PROFILE
STRUCTURE NO. 101-3068
SHEET NO. 3 OF 3 SHEETS

F.A.P. RTE.	SECTION	COUNTY	TOTAL SHEETS	SHEET NO.
412	16-00620-00-BR	WINNEBAGO	109	14
	WHA* 1017D17	CONTRACT NO. 85704		
	ILLINOIS FED. AID PROJECT 7K29(857)			

① TEMPORARY PAVEMENT SECTION SHALL INCLUDE:
4" HOT-MIX ASPHALT BINDER COURSE, IL 19.0, N70
7" AGGREGATE BASE COURSE, TYPE B

② TEMPORARY PAVEMENT MARKING - LINE 4" (YELLOW)

③ TEMPORARY PAVEMENT MARKING - LINE 4" (WHITE)

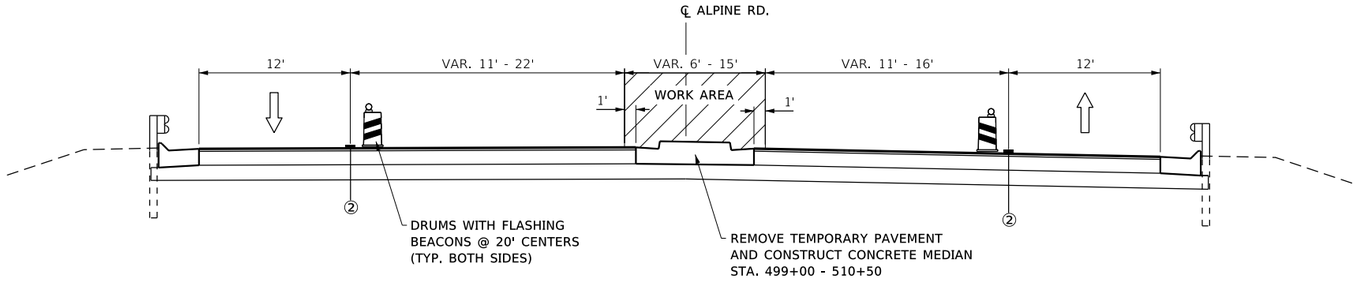

STAGE III TYPICAL SECTION

STA. 499+00.00 - STA. 510+50.00

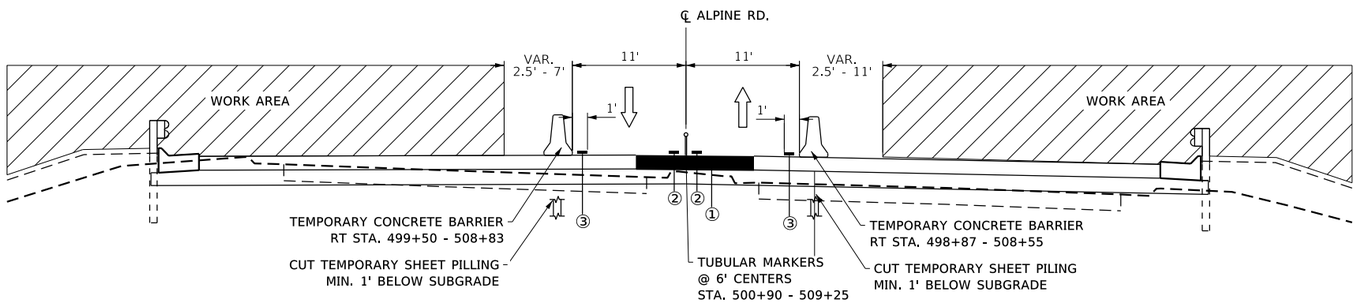

STAGE II TYPICAL SECTION

STA. 499+00.00 - STA. 510+50.00

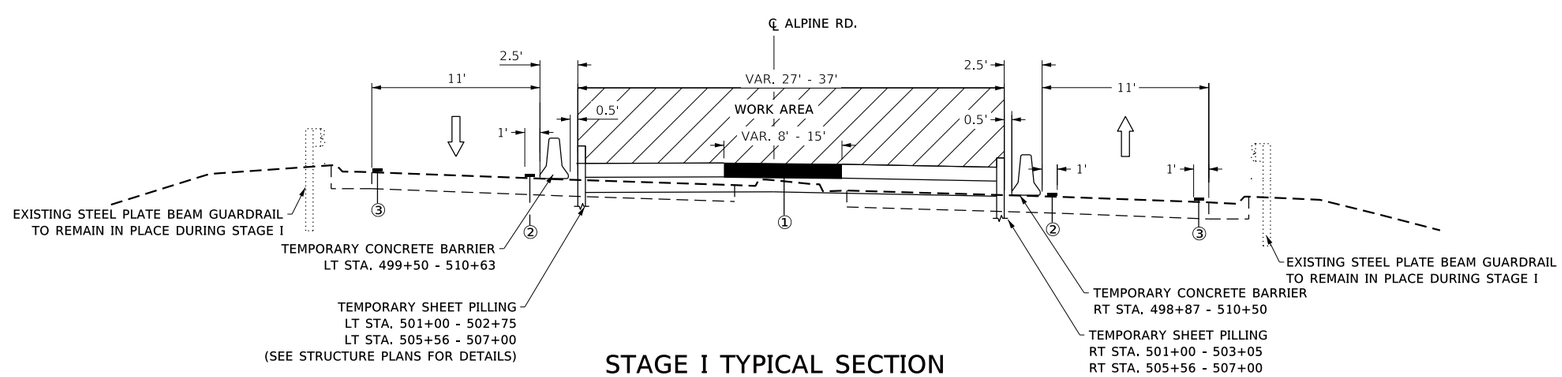

STAGE I TYPICAL SECTION

STA. 499+00.00 - STA. 510+50.00

WILLETT HOFMANN & ASSOCIATES INC
ENGINEERING ARCHITECTURE LAND SURVEYING
809 EAST 2ND STREET, DIXON, IL 61021-0367
T: 815-284-3381 DESIGN FIRM: #184-000918

DESIGNED - LGN	REVISED -		
CHECKED - GFS	REVISED -		
DRAWN - TBS	REVISED -		
CHECKED - LGN	REVISED -		

WINNEBAGO COUNTY
F.A.P. 0412 (ALPINE RD) OVER FOREST HILLS RD
STATION 504+16.50

STAGE CONSTRUCTION TYPICAL SECTIONS
STRUCTURE NO. 101-3068

SHEET NO. 1 OF 1 SHEETS

F.A.P. RTE.	SECTION	COUNTY	TOTAL SHEETS	SHEET NO.
412	16-00620-00-BR	WINNEBAGO	109	15
	WHA* 1017D17	CONTRACT NO. 85704		
	ILLINOIS FED. AID PROJECT 7K29(857)			

STAGE I CONSTRUCTION

REMOVE EXISTING PAVEMENT MARKINGS, PLACE STAGE I TEMPORARY PAVEMENT MARKINGS, AND INSTALL STAGE I CONCRETE BARRIER AND TRAFFIC CONTROL USING STANDARDS 701301, 701606, AND 701901.

REMOVE STAGE I PORTION OF EXISTING STRUCTURE AND CONSTRUCT STAGE I PORTION OF PROPOSED SUPERSTRUCTURE (SEE STAGE CONSTRUCTION DETAILS AND SEQUENCE SHEET IN THE BRIDGE PLANS).

PERFORM STAGE I PAVEMENT REMOVAL AND PORTION OF NEW PAVEMENT AND TEMPORARY PAVEMENT FOR STAGE II TRAFFIC (2" HMA SURFACE TO BE PLACED IN STAGE III).

PLACE STAGE II TEMPORARY PAVEMENT MARKINGS AND RELOCATE CONCRETE BARRIER TO STAGE II ALIGNMENT USING STANDARDS 701606 AND 701901.

SWITCH TRAFFIC TO STAGE II CONSTRUCTION.

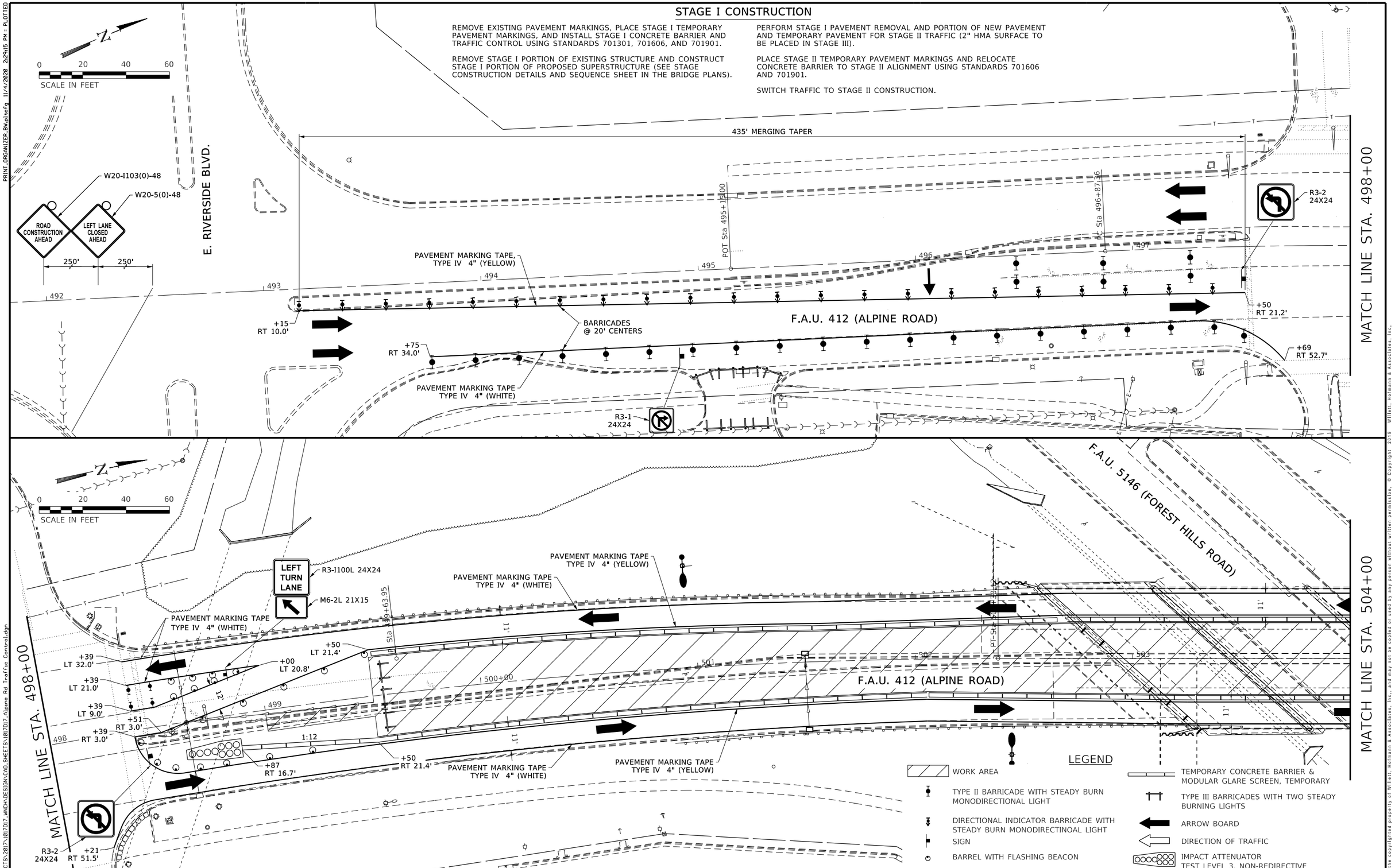

WILLETT HOFMANN & ASSOCIATES INC
ENGINEERING ARCHITECTURE LAND SURVEYING
809 EAST 2ND STREET, DIXON, IL 61021-0367
T: 815-284-3381 DESIGN FIRM: #184-000918

DESIGNED - LGN	REVISED -		
CHECKED - GFS	REVISED -		
DRAWN - TBS	REVISED -		
CHECKED - LGN	REVISED -		

WINNEBAGO COUNTY
F.A.P. 0412 (ALPINE RD) OVER FOREST HILLS RD
STATION 504+16.50

ALPINE ROAD TRAFFIC CONTROL PLAN - STAGE I
STRUCTURE NO. 101-3068
SHEET NO. 1 OF 4 SHEETS

F.A.P. RTE.	SECTION	COUNTY	TOTAL SHEETS	SHEET NO.
412	16-00620-00-BR	WINNEBAGO	109	16
	WHA* 1017D17	CONTRACT NO. 85704		
	ILLINOIS FED. AID PROJECT 7K29(857)			

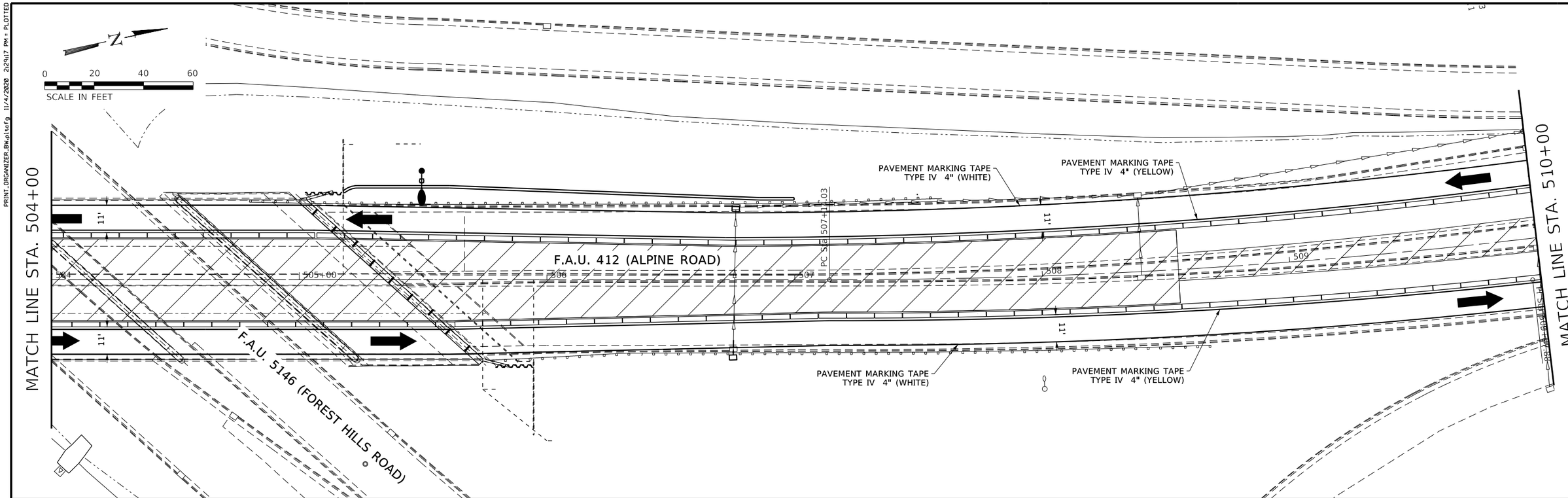

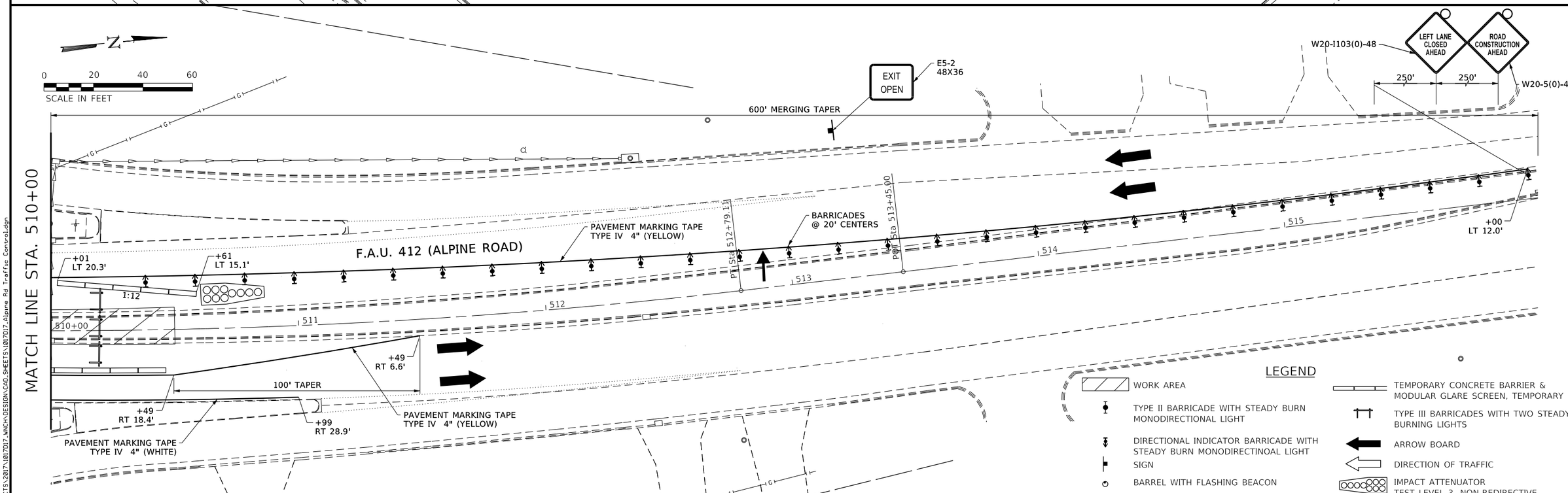

WILLETT HOFMANN & ASSOCIATES INC
ENGINEERING ARCHITECTURE LAND SURVEYING
809 EAST 2ND STREET, DIXON, IL 61021-0367
T: 815-284-3381 DESIGN FIRM: #184-000918

DESIGNED	- LGN	REVISED	-
CHECKED	- GFS	REVISED	-
DRAWN	- TBS	REVISED	-
CHECKED	- LGN	REVISED	-

WINNEBAGO COUNTY
F.A.P. 0412 (ALPINE RD) OVER FOREST HILLS RD
STATION 504+16.50

ALPINE ROAD TRAFFIC CONTROL PLAN - STAGE I
STRUCTURE NO. 101-3068

SHEET NO. 2 OF 4 SHEETS

F.A.P. RTE.	SECTION	COUNTY	TOTAL SHEETS	SHEET NO.
412	16-00620-00-BR	WINNEBAGO	109	17
	WHA# 1017D17	CONTRACT NO. 85704		
	ILLINOIS FED. AID PROJECT 7K29(857)			

STAGE II CONSTRUCTION

REMOVE STAGE II PORTION OF EXISTING STRUCTURE AND CONSTRUCT STAGE II PORTION OF PROPOSED SUPERSTRUCTURE (SEE STAGE CONSTRUCTION DETAILS AND SEQUENCE SHEET IN THE BRIDGE PLANS).

PERFORM STAGE II PAVEMENT REMOVAL, EARTHWORK, CURB & GUTTER, GUARDRAIL INSTALLATION, AND PORTION OF NEW PAVEMENT (2" HMA SURFACE TO BE PLACED IN STAGE III).

PLACE STAGE III TEMPORARY PAVEMENT MARKINGS AND REMOVE CONCRETE BARRIER USING STANDARDS 701606 AND 701901.

SWITCH TRAFFIC TO STAGE III TYPICAL SECTION USING SAME LANE REDUCTIONS AS SHOWN IN STAGE I TRAFFIC CONTROL DETAILS.

LEGEND

- WORK AREA
- TYPE II BARRICADE WITH STEADY BURN MONODIRECTIONAL LIGHT
- DIRECTIONAL INDICATOR BARRICADE WITH STEADY BURN MONODIRECTINOAL LIGHT
- SIGN
- BARREL WITH FLASHING BEACON
- TEMPORARY CONCRETE BARRIER & MODULAR GLARE SCREEN, TEMPORARY
- TYPE III BARRICADES WITH TWO STEADY BURNING LIGHTS
- ARROW BOARD
- DIRECTION OF TRAFFIC
- IMPACT ATTENUATOR TEST LEVEL 3, NON-REDIRECTIVE

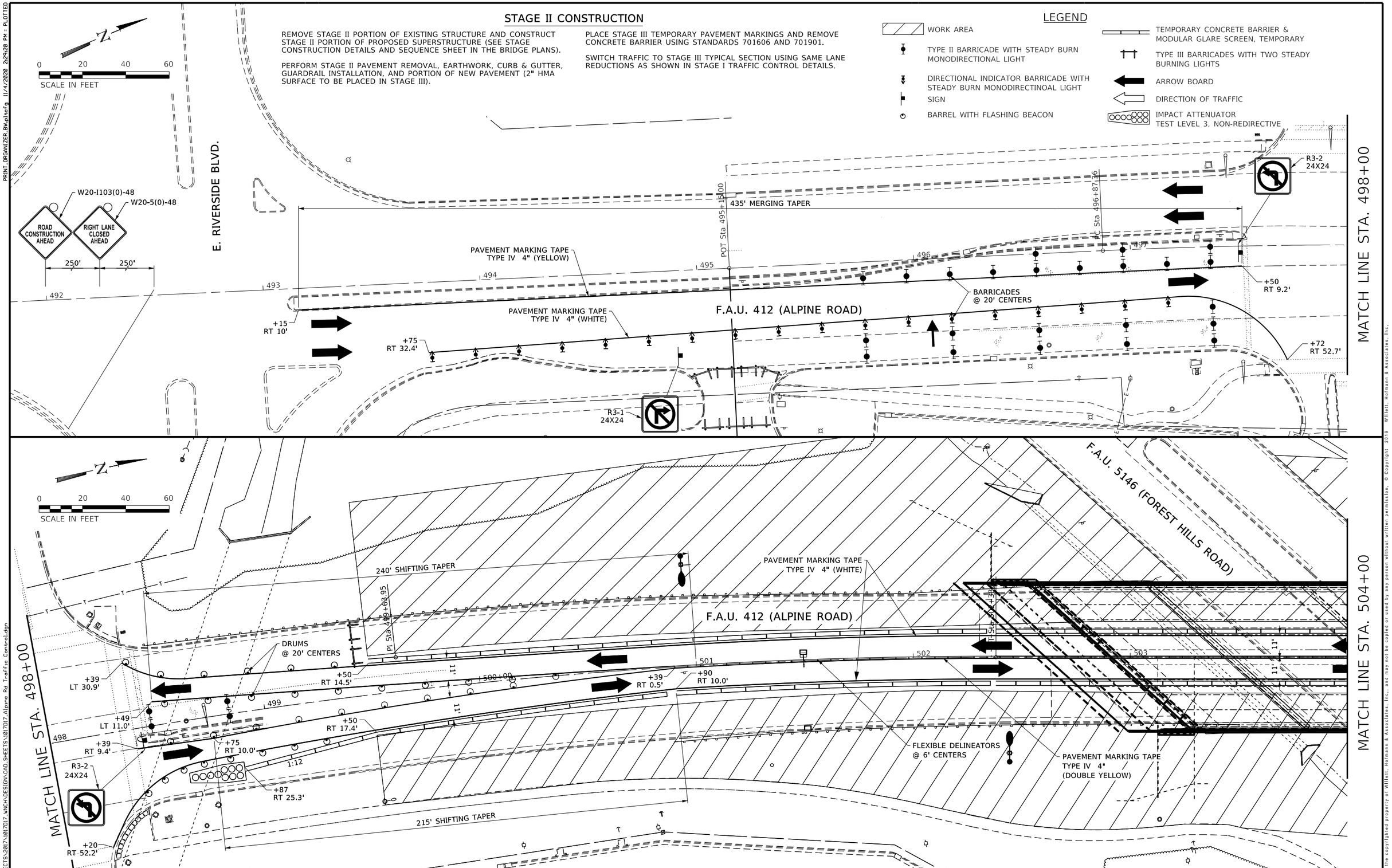

WILLETT HOFMANN & ASSOCIATES INC
ENGINEERING ARCHITECTURE LAND SURVEYING
809 EAST 2ND STREET, DIXON, IL 61021-0367
T: 815-284-3381 DESIGN FIRM: #184-000918

DESIGNED	- LGN	REVISED	-
CHECKED	- GFS	REVISED	-
DRAWN	- TBS	REVISED	-
CHECKED	- LGN	REVISED	-

WINNEBAGO COUNTY
F.A.P. 0412 (ALPINE RD) OVER FOREST HILLS RD
STATION 504+16.50

ALPINE ROAD TRAFFIC CONTROL PLAN - STAGE II
STRUCTURE NO. 101-3068
SHEET NO. 3 OF 4 SHEETS

F.A.P. RTE.	SECTION	COUNTY	TOTAL SHEETS	SHEET NO.
412	16-00620-00-BR	WINNEBAGO	109	18
	WHA# 1017D17	CONTRACT NO. 85704		
	ILLINOIS FED. AID PROJECT 7K29(857)			

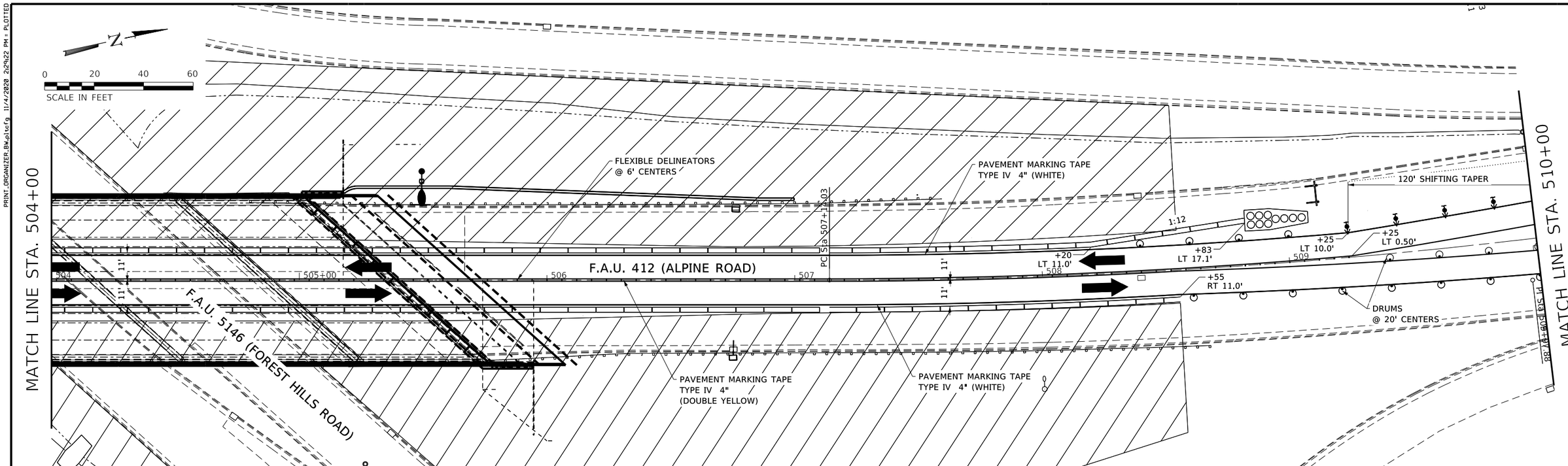

STAGE III CONSTRUCTION

REMOVE TEMPORARY PAVEMENT AND CONSTRUCT CONCRETE MEDIAN USING STANDARDS 701606 AND 701901.

PLACE 2"HMA SURFACE ALONG WITH ANY REMAINING WORK USING STANDARDS 701301 AND 701901.

PERFORM LANDSCAPE AND STRIPING WORK USING STANDARDS 701001, 701006, 701301, AND 701901.

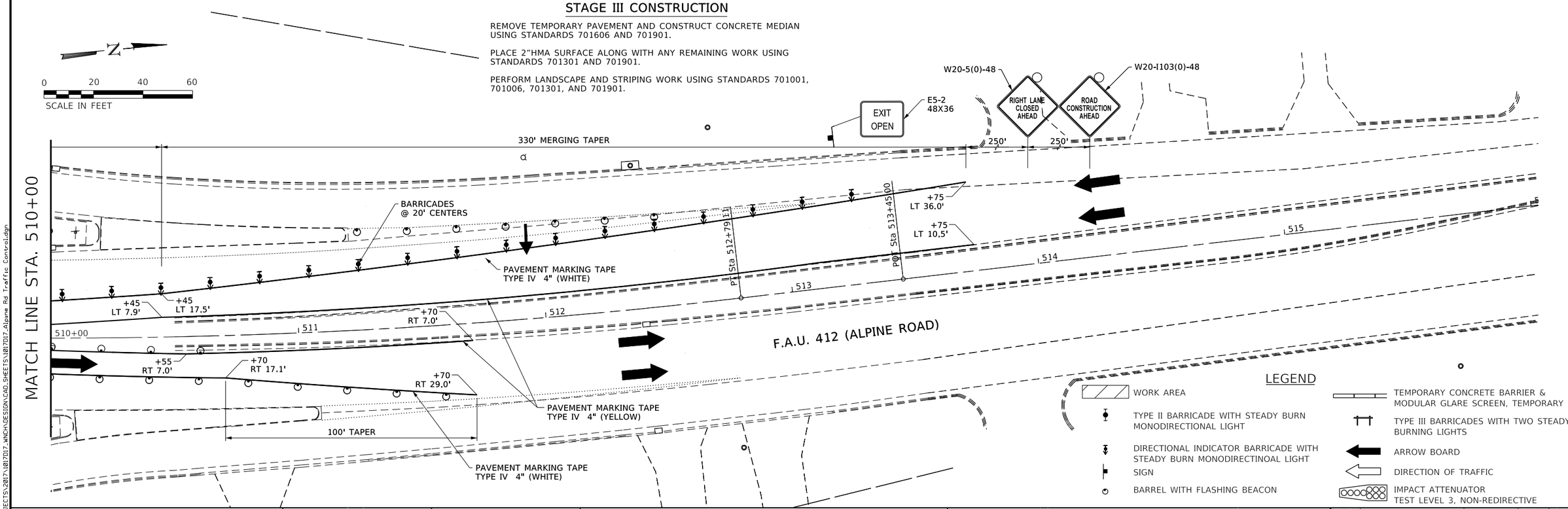

LEGEND

- WORK AREA
- TYPE II BARRICADE WITH STEADY BURN MONODIRECTIONAL LIGHT
- DIRECTIONAL INDICATOR BARRICADE WITH STEADY BURN MONODIRECTINOAL LIGHT
- SIGN
- BARREL WITH FLASHING BEACON
- TEMPORARY CONCRETE BARRIER & MODULAR GLARE SCREEN, TEMPORARY
- TYPE III BARRICADES WITH TWO STEADY BURNING LIGHTS
- ARROW BOARD
- DIRECTION OF TRAFFIC
- IMPACT ATTENUATOR TEST LEVEL 3, NON-REDIRECTIVE

WILLETT HOFMANN & ASSOCIATES INC
ENGINEERING ARCHITECTURE LAND SURVEYING
809 EAST 2ND STREET, DIXON, IL 61021-0367
T: 815-284-3381 DESIGN FIRM: #184-000918

DESIGNED - LGN	REVISED -		
CHECKED - GFS	REVISED -		
DRAWN - TBS	REVISED -		
CHECKED - LGN	REVISED -		

WINNEBAGO COUNTY
F.A.P. 0412 (ALPINE RD) OVER FOREST HILLS RD
STATION 504+16.50

ALPINE ROAD TRAFFIC CONTROL PLAN - STAGE II
STRUCTURE NO. 101-3068

SHEET NO. 4 OF 4 SHEETS

F.A.P. RTE.	SECTION	COUNTY	TOTAL SHEETS	SHEET NO.
412	16-00620-00-BR	WINNEBAGO	109	19
	WHA* 1017D17	CONTRACT NO. 85704		
	ILLINOIS FED. AID PROJECT 7K29(857)			

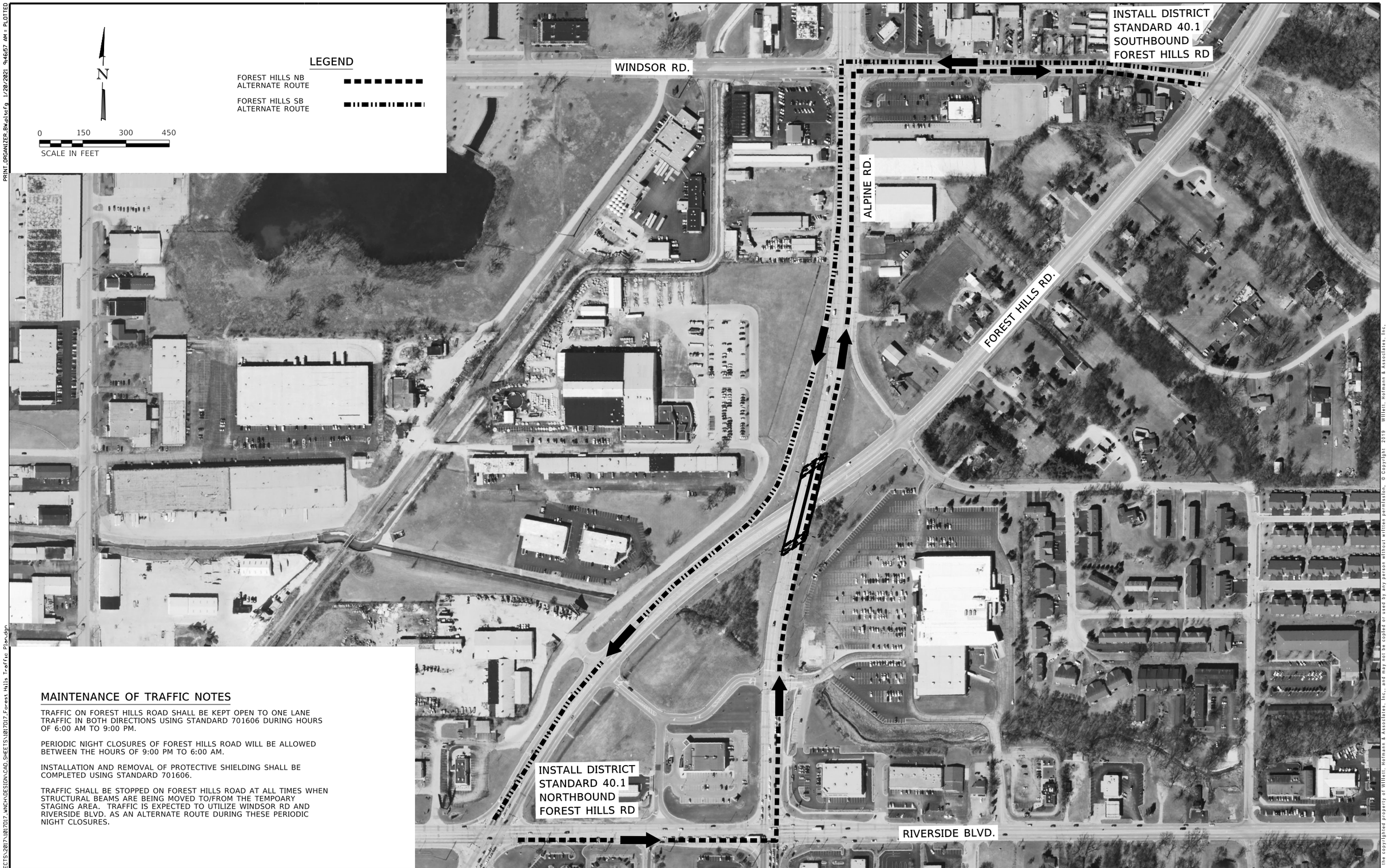

MAINTENANCE OF TRAFFIC NOTES

TRAFFIC ON FOREST HILLS ROAD SHALL BE KEPT OPEN TO ONE LANE TRAFFIC IN BOTH DIRECTIONS USING STANDARD 701606 DURING HOURS OF 6:00 AM TO 9:00 PM.

PERIODIC NIGHT CLOSURES OF FOREST HILLS ROAD WILL BE ALLOWED BETWEEN THE HOURS OF 9:00 PM TO 6:00 AM.

INSTALLATION AND REMOVAL OF PROTECTIVE SHIELDING SHALL BE COMPLETED USING STANDARD 701606.

TRAFFIC SHALL BE STOPPED ON FOREST HILLS ROAD AT ALL TIMES WHEN STRUCTURAL BEAMS ARE BEING MOVED TO/FROM THE TEMPOARY STAGING AREA. TRAFFIC IS EXPECTED TO UTILIZE WINDSOR RD AND RIVERSIDE BLVD. AS AN ALTERNATE ROUTE DURING THESE PERIODIC NIGHT CLOSURES.

WILLETT HOFMANN & ASSOCIATES INC
ENGINEERING ARCHITECTURE LAND SURVEYING
809 EAST 2ND STREET, DIXON, IL 61021-0367
T: 815-284-3381 DESIGN FIRM: #184-000918

DESIGNED -	REVISED -
CHECKED -	REVISED -
DRAWN -	REVISED -
CHECKED -	REVISED -

WINNEBAGO COUNTY
F.A.P. 0412 (ALPINE RD) OVER FOREST HILLS RD
STATION 504+16.50

FOREST HILLS ROAD TRAFFIC CONTROL PLAN
STRUCTURE NO. 101-3068

SHEET NO. 1 OF 1 SHEETS

F.A.P. RTE.	SECTION	COUNTY	TOTAL SHEETS	SHEET NO.
412	16-00620-00-BR	WINNEBAGO	109	20
	WHA# 1017D17	CONTRACT NO. 85704		
		ILLINOIS FED. AID PROJECT 7K29(857)		

PRINT_ORGANIZER_BW.pltcfg 1/20/2021 9:46:57 AM = PLOTTED
FILE = S:\PROJECTS\2017\1017D17_WNCH\DESIGN\CAD_SHEETS\1017D17_Forest Hills Traffic Plan.dgn

LEGEND

- SEEDING, CLASS 1A (SPECIAL) & EROSION CONTROL BLANKET
- PERIMETER EROSION BARRIER
- TEMPORARY DITCH CHECKS
- RUNOFF FLOW DIRECTION
- INLET AN PIPE PROTECTION

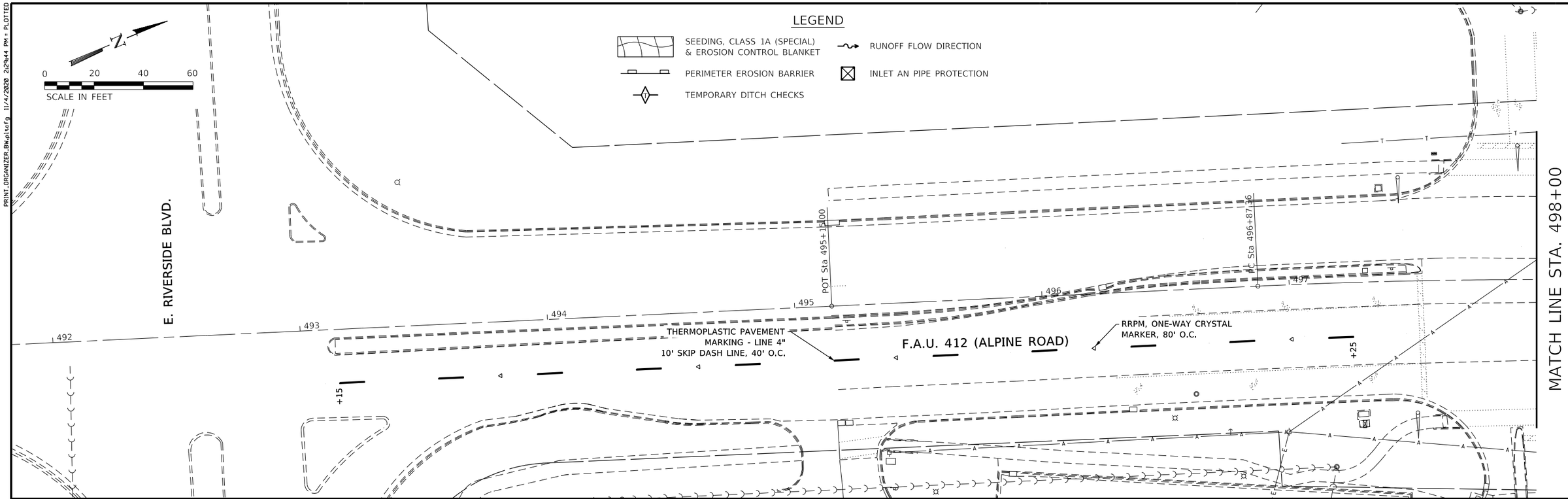

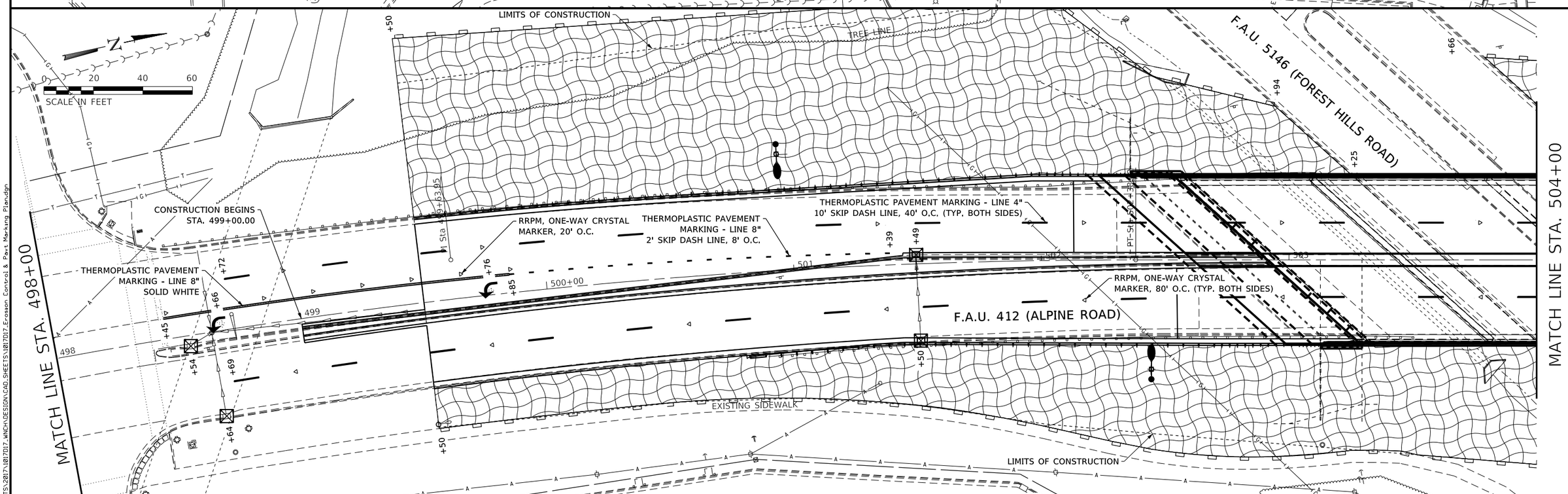

WILLETT HOFMANN & ASSOCIATES INC
ENGINEERING ARCHITECTURE LAND SURVEYING
809 EAST 2ND STREET, DIXON, IL 61021-0367
T: 815-284-3381 DESIGN FIRM: #184-000918

DESIGNED	- LGN	REVISED	-
CHECKED	- GFS	REVISED	-
DRAWN	- TBS	REVISED	-
CHECKED	- LGN	REVISED	-

WINNEBAGO COUNTY
F.A.P. 0412 (ALPINE RD) OVER FOREST HILLS RD
STATION 504+16.50

EROSION CONTROL & PAVEMENT MARKINGS PLAN
STRUCTURE NO. 101-3068

SHEET NO. 1 OF 3 SHEETS

F.A.P. RTE.	SECTION	COUNTY	TOTAL SHEETS	SHEET NO.
412	16-00620-00-BR	WINNEBAGO	109	21
	WHA# 1017D17	CONTRACT NO. 85704		
		ILLINOIS FED. AID PROJECT 7K29(857)		

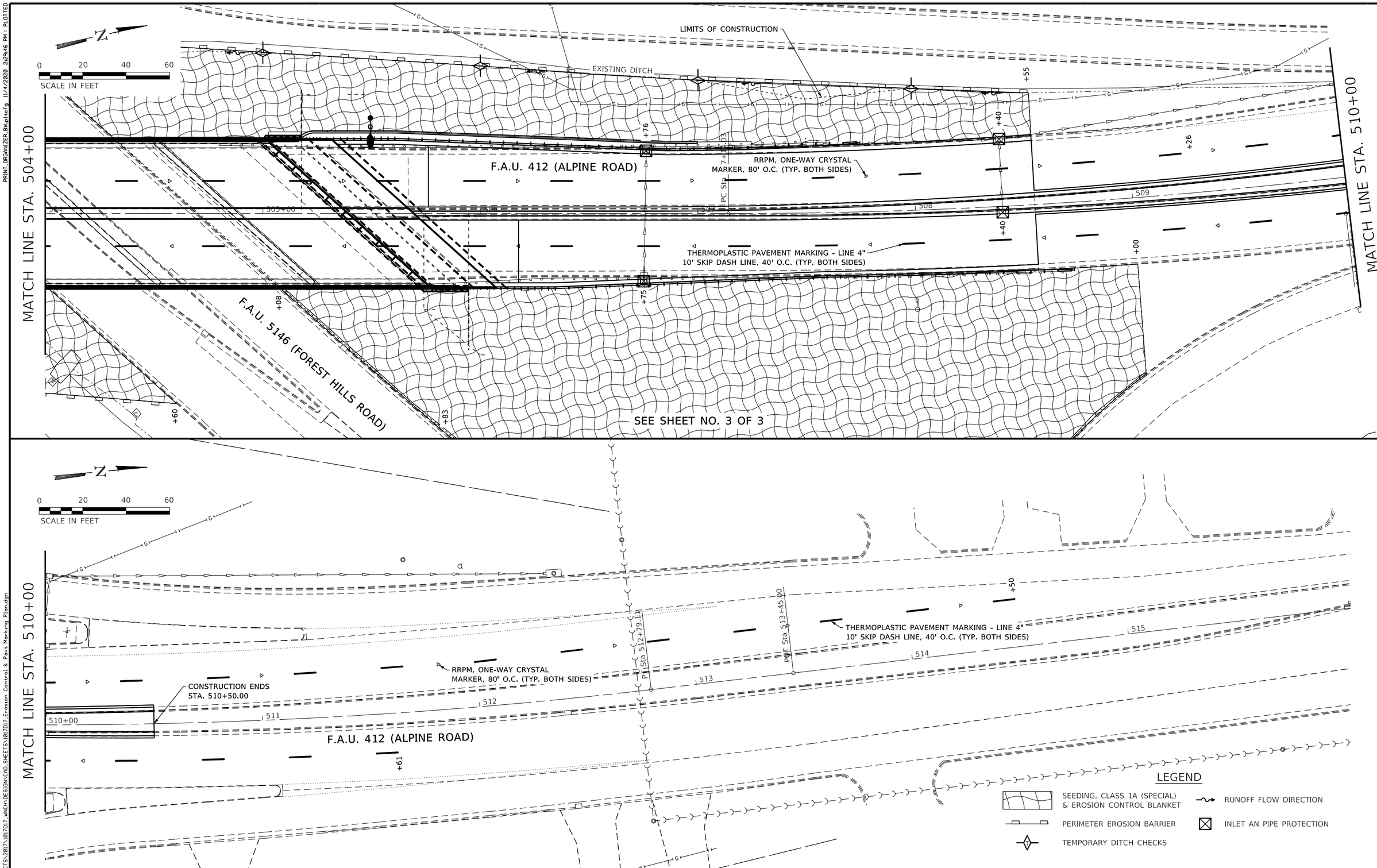

WILLETT HOFMANN & ASSOCIATES INC
ENGINEERING ARCHITECTURE LAND SURVEYING
809 EAST 2ND STREET, DIXON, IL 61021-0367
T: 815-284-3381 DESIGN FIRM: #184-000918

DESIGNED -	LGN	REVISED -	
CHECKED -	GFS	REVISED -	
DRAWN -	TBS	REVISED -	
CHECKED -	LGN	REVISED -	

WINNEBAGO COUNTY
F.A.P. 0412 (ALPINE RD) OVER FOREST HILLS RD
STATION 504+16.50

EROSION CONTROL & PAVEMENT MARKINGS PLAN
STRUCTURE NO. 101-3068
SHEET NO. 2 OF 3 SHEETS

F.A.P. RTE.	SECTION	COUNTY	TOTAL SHEETS	SHEET NO.
412	16-00620-00-BR	WINNEBAGO	109	22
	WHA# 1017D17	CONTRACT NO. 85704		
		ILLINOIS FED. AID PROJECT 7K29(857)		

FILE = S:\PROJECTS\2017\1017D17_WNCH\DESIGN\CAD_SHEETS\1017D17_Erosion Control & Pavt Marking Plan.dgn

PRINT_ORGANIZER_BW.pltcfg 11/4/2020 2:29:46 PM = PLOTTED

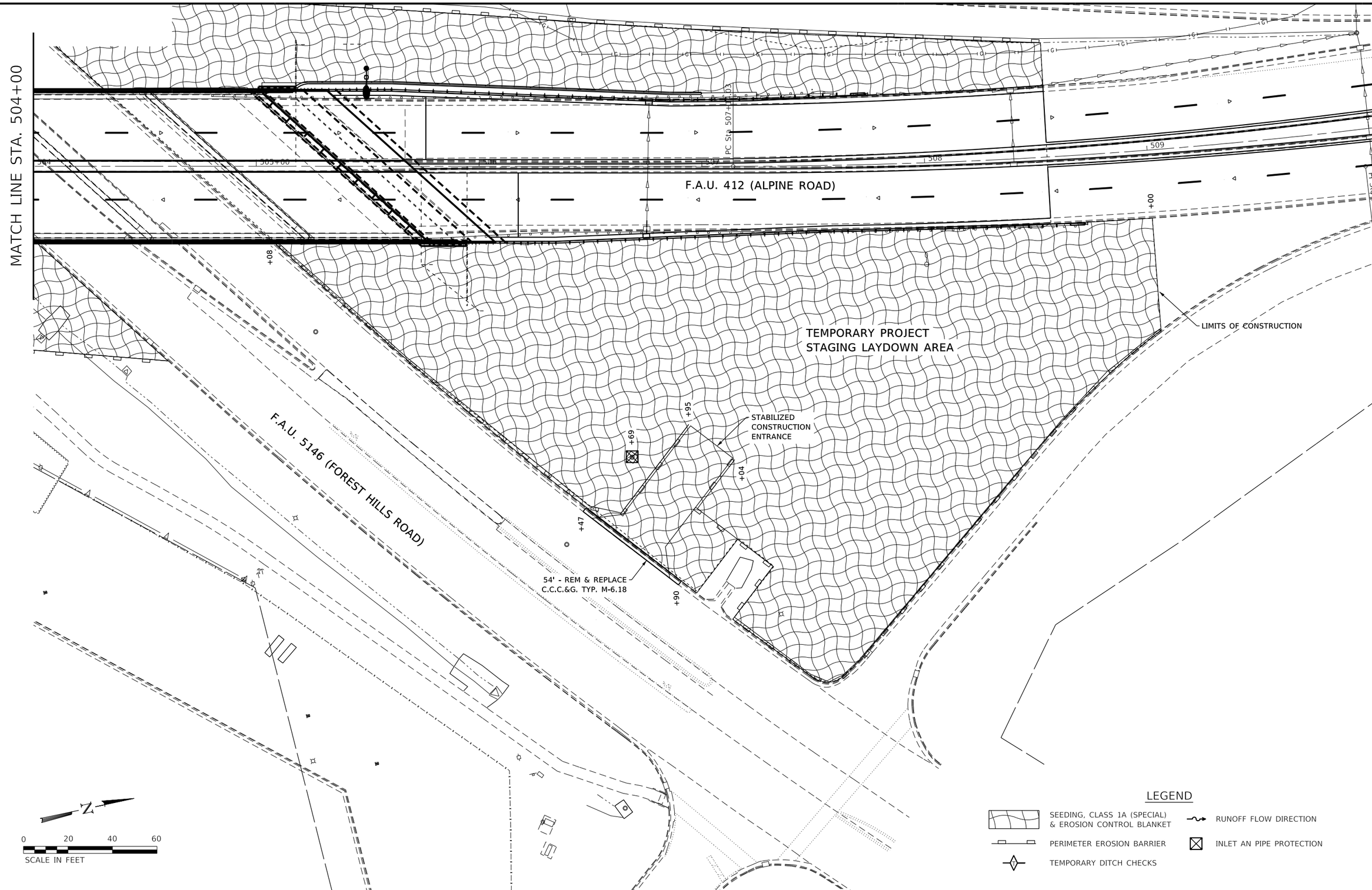

WILLETT HOFMANN & ASSOCIATES INC
ENGINEERING ARCHITECTURE LAND SURVEYING
809 EAST 2ND STREET, DIXON, IL 61021-0367
T: 815-284-3381 DESIGN FIRM: #184-000918

DESIGNED -	REVISED -		
CHECKED -	REVISED -		
DRAWN -	REVISED -		
CHECKED -	REVISED -		

WINNEBAGO COUNTY
F.A.P. 0412 (ALPINE RD) OVER FOREST HILLS RD
STATION 504+16.50

EROSION CONTROL & PAVEMENT MARKINGS PLAN
STRUCTURE NO. 101-3068

SHEET NO. 3 OF 3 SHEETS

F.A.P. RTE.	SECTION	COUNTY	TOTAL SHEETS	SHEET NO.
412	16-00620-00-BR	WINNEBAGO	109	23
WHA# 1017D17		CONTRACT NO. 85704		
	ILLINOIS	FED. AID PROJECT 7K29(857)		

Bench Mark: Chiseled " □ " on mast arm base at northeast corner of Alpine Road & entrance of Valli Produce.

Existing Structure: S.N. 101-3068 built in 1972 by Winnebago County at Sta. 504+16.50 as a four span (52'-6",70'-8",70'-8",50'-0") skewed 48° Rt. Ahead Continuous Steel WF Beam grade seperation structure over Forest Hills Road on reinforced concrete piers and concrete pile bent abutments. 251'-4" back-to-back of abutments and 66'-0" out to out of deck.

The existing structure is to be rehabilitated under stage construction.

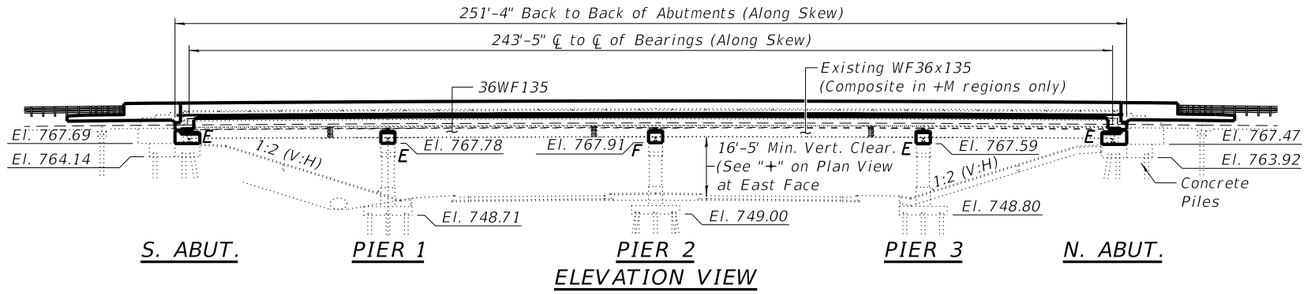

ELEVATION VIEW

INDEX OF SHEETS

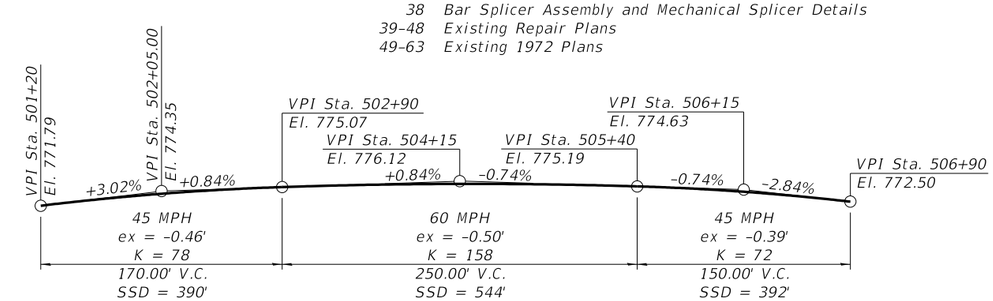

PROFILE GRADE

(Along ℄ Roadway)

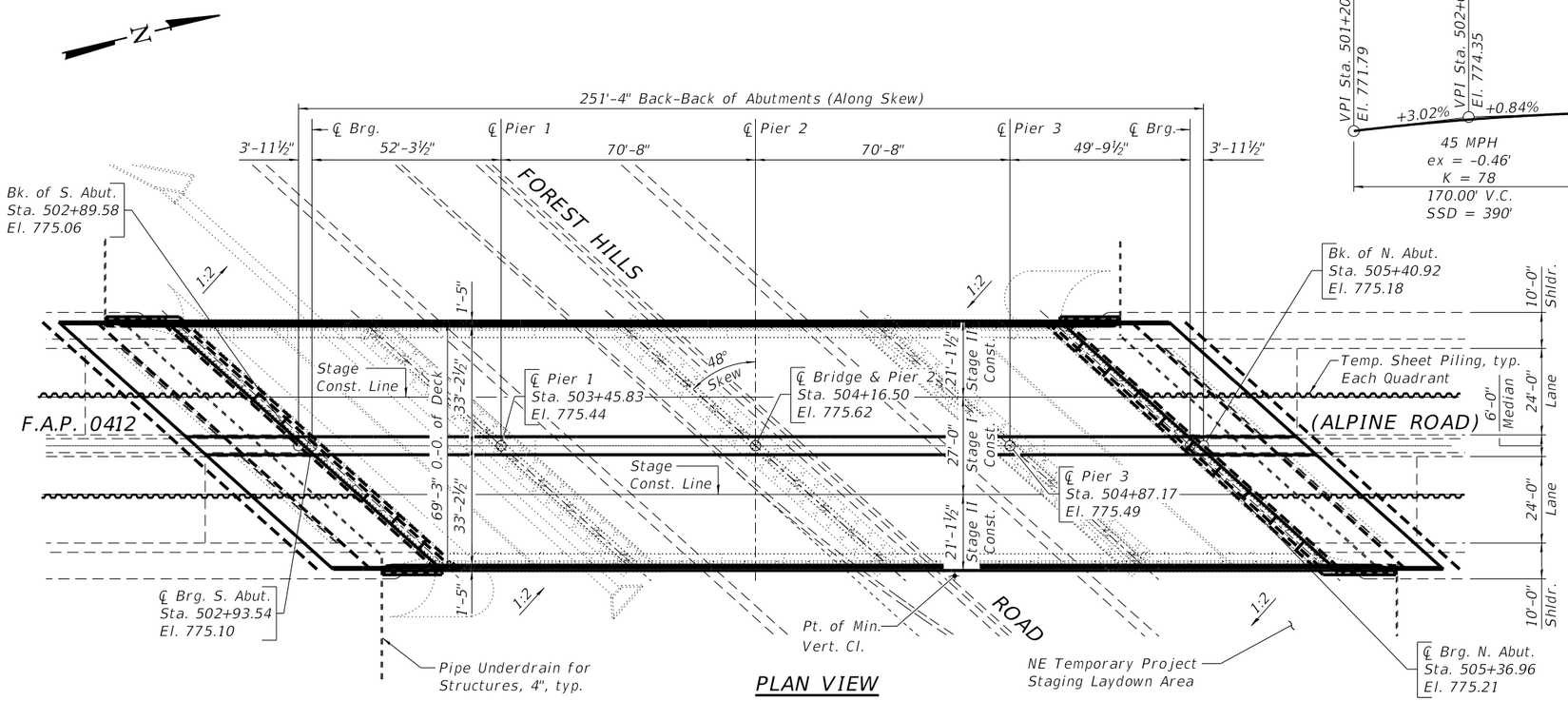

PLAN VIEW

STATION 504+16.50
RE-BUILT 2021 BY
WINNEBAGO COUNTY
SECTION 16-00620-00-BR
F.A.P. RTE. 412 STA. 504+16.50
STR. NO. 101-3068 LOADING HL-93

NAME PLATE

See Std. 515001

Existing Name Plate shall be cleaned and relocated next to new Name Plate. Cost included with Name Plates.

STATE OF ILLINOIS
PETER L. PASCH
081-008079
DIXON, IL
LICENSED STRUCTURAL ENGINEER

DATE:

EXPIRES 11/30/20

"I certify that to the best of my knowledge, information and belief, this bridge design is structurally adequate for the design loading shown on the plans. The design is an economical one for the style of structure and complies with requirements of the current 'AASHTO LRFD Bridge Design Specifications'."

HIGHWAY CLASSIFICATION

Route: F.A.P. 412 (Alpine Road)
Functional Class: Other Principal Arterial
ADT: 17,721 (2019): 22,528 (2039)
ADTT: 1,772 (2019): 2,253 (2039)
DHV: 1,595 (2019): 2,028 (2039)
Design Speed: 45 M.P.H.
Posted Speed: 45 M.P.H.
Two Way Traffic

Route: F.A.U. 5146 (Forest Hills Road)
Functional Class: Other Principal Arterial
ADT: 14,455 (2019): 21,378 (2039)
ADTT: 578 (2019): 855 (2039)
DHV: 1,446 (2019): 2,138 (2039)
Design Speed: 45 M.P.H.
Posted Speed: 45 M.P.H.
Two Way Traffic

DESIGN SPECIFICATIONS

2017 AASHTO LRFD Bridge Design Specifications, 8th Edition

DESIGN STRESSES

FIELD UNITS (NEW CONSTRUCTION)

f'c = 3,500 psi
f'c = 4,000 psi (Superstructure Concrete)
fy = 60,000 psi (Reinforcement)

FIELD UNITS (EXISTING CONSTRUCTION)

f'c = 3,500 psi
fy = 36,000 psi (Structural Steel)
f'y = 60,000 psi (Reinforcement)

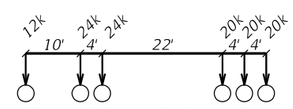

120K PERMIT TRUCK CONFIGURATION LOADING HL-93 & IDOT 120K PERMIT TRUCK

No future wearing surface is allowed.

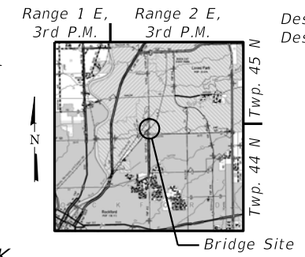

LOCATION SKETCH

SEISMIC DATA

Seismic Performance Zone (SPZ) = 1
Design Spectral Acceleration at 1.0 sec. (S_{D1}) = 0.078 g
Design Spectral Acceleration at 0.2 sec. (S_{DS}) = 0.128 g
Soil Site Class = D

GENERAL PLAN AND ELEVATION
F.A.P. 0412 (ALPINE ROAD) OVER FOREST HILLS ROAD
SEC. 16-00620-00-BR
WINNEBAGO COUNTY
STATION 504+16.50
STRUCTURE NO. 101-3068

WILLETT HOFMANN & ASSOCIATES INC
ENGINEERING ARCHITECTURE LAND SURVEYING
809 EAST 2ND STREET, DIXON, IL 61021-0367
T: 815-284-3381 DESIGN FIRM: #184-000918

DESIGNED - PV	REVISED -	WINNEBAGO COUNTY F.A.P. 0412 (ALPINE RD) OVER FOREST HILLS RD STATION 504+16.50	
CHECKED - PLP	REVISED -		
DRAWN - RDA	REVISED -		
CHECKED - PLP	REVISED -		STRUCTURAL SHEET NO. 1 OF 63 SHEETS

F.A.P. RTE.	SECTION	COUNTY	TOTAL SHEETS	SHEET NO.
412	16-00620-00-BR	WINNEBAGO	109	24
	WHA* 1017D17	CONTRACT NO. 85704		
	ILLINOIS FED. AID PROJECT 7K29(857)			

GENERAL NOTES:

Fasteners shall be ASTM A325 Type 3, Bolts 7/8" Ø, holes 15/16" Ø, unless otherwise noted.

Calculated weight of Erecting Structural Steel (L. Sum) = 412,955 lbs.

All bearings shall be AASHTO M 270 Grade 50.

No field welding is permitted except as specified in the contract documents.

Reinforcement bars designated (E) shall be epoxy coated.

If the Contractor elects to use cantilever forming brackets on the exterior beams or girders, the brackets shall be placed at the same locations as required for the hardwood blocks in Article 503.06(b) of the Standard Specifications. If additional cantilever forming brackets are required, hardwood blocking shall be wedged between the exterior and first interior beam at each of these additional bracket locations.

Slipforming Parapet is not allowed.

Plan dimensions and details relative to existing plans are subject to nominal construction variations. The Contractor shall field verify existing dimensions and details affecting new construction and make necessary approved adjustments prior to construction or ordering of materials. Such variations shall not be cause for additional compensation for a change in scope of the work, however, the Contractor will be paid for the quantity actually furnished at the unit price bid for the work.

Existing reinforcement that remains shall be cleaned and incorporated into the new construction. Cost included with Concrete Removal. Any reinforcement bars that are damaged during Construction shall be repaired or replaced using an approved bar splicer or anchorage system. Cost to be included with "Concrete Structures". See Special Provisions.

The exterior surfaces and bottom of the bottom flange of the fascia beams shall be cleaned per Commercial Grade Power Tool Cleaning (SSPC- SP15). All other beams and other structural steel shall be cleaned per Near White Blast Cleaning (SSPC- SP10). The designated areas cleaned per Near White Blast Cleaning (SSPC- SP10) and per Commercial Grade Power Tool Cleaning (SSPC- SP15) shall be painted according to the requirements of Organic Zinc-Rich/Epoxy/Urethane Paint System. The color of the final finish coat for all interior steel surfaces shall be Gray, Munsell No 5B 7/1. The color of the final finish coat for the exterior and bottom flange of the fascia beams shall be Interstate Green (Munsell No. 7.5G 4/8). Cost of cleaning and painting existing structural steel shall be included with "Cleaning and Painting Steel Bridge No. 1" and shall be as specified in the special provision for "Cleaning and Painting Existing Steel Structures".

The existing structural steel coating contains lead. The Contractor shall take appropriate precautions to deal with the presence of lead on this project. SSPC QP1 (and SSPC QP2) Certification is required for this Contract. A minimum of 1 air monitor will be required to monitor abrasive blasting operations at this site. See Special Provision for "Containment and Disposal of Lead Paint Cleaning Residues." Cost to be included with "Containment and Disposal of Lead Paint Cleaning Residue No. 1".

The existing piers and abutments below the proposed removal lines shall remain in place during all Stages of Construction. The Contractor may substitute a temporary support system to facilitate construction. The use of a temporary system shall be executed according to the General Bridge Specifications Standard Assessment Report for Contractors means and methods.

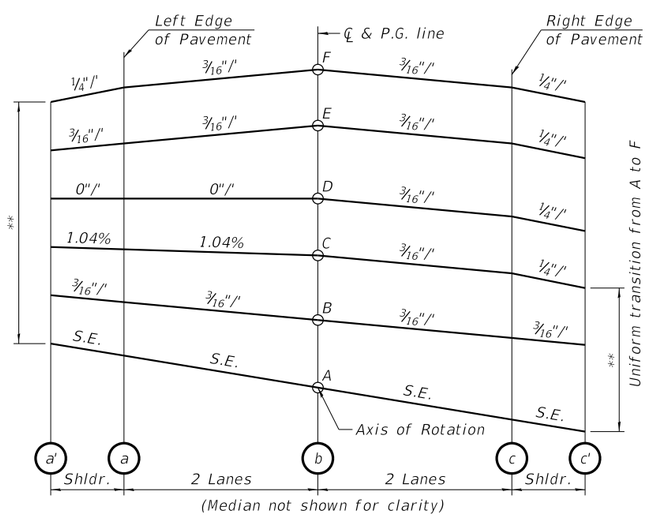

AXIS OF ROTATION ABOUT CENTERLINE

(Looking North)
(Four-Lane Highway)

**Shoulder slope varies uniformly per S.E. to meet 1/4"/', then slope is constant 1/4"/' on Bridge and Approach Slab.

BILL OF MATERIAL - BRIDGE

	ITEM	UNIT	SUPER	SUB	TOTAL
	Concrete Removal	Cu. Yd.	570.1	69.4	639.5
	Bridge Rail Removal	Foot	493	———	493
	Protective Shield	Sq. Yd.	1,493		1,493
*	Structure Excavation	Cu. Yd.	———	1,067	1,067
	Concrete Structures	Cu. Yd.	———	271.7	271.7
	Concrete Superstructure	Cu. Yd.	676.8	———	676.8
	Bridge Deck Grooving	Sq. Yd.	2,036	———	2,036
	Protective Coat	Sq. Yd.	2,558	———	2,558
	Concrete Superstructure (Approach Slab)	Cu. Yd.	190.2	———	190.2
*	Erecting Structural Steel	L. Sum	1	———	1
	Furnishing and Erecting Structural Steel	Pound	2,004	———	2,004
	Stud Shear Connectors	Each	12,080	———	12,080
	Reinforcement Bars, Epoxy Coated	Pound	216,370	36,660	253,030
	Bar Splicers	Each	2,142	104	2,246
	Name Plates	Each	1	———	1
	Elastomeric Bearing Assembly, Type I	Each	40	———	40
*	Anchor Bolts, 1"	Each	100	———	100
*	Temporary Sheet Piling	Sq. Ft.	———	6,926	6,926
*	Permanent Sheet Piling	Sq. Ft.	———	660	660
*	Segmental Concrete Block Wall	Sq. Yd.	———	894	894
	Granular Backfill for Structures	Cu. Yd.	———	959	959
	Epoxy Crack Injection	Foot	———	644	644
*	Geocomposite Wall Drain	Sq. Yd.	———	140	140
*	Structural Steel Removal	Pound	412,955	———	412,955
*	Structural Steel Repair	Pound	9,672	———	9,672
*	Removal of Existing Bearings	Each	———	50	50
*	Containtment and Disposal of Lead Paint Cleaning Residues No. 1	L. Sum	1	———	1
*	Cleaning and Painting Steel Bridge No. 1	L. Sum	1	———	1
*	Structural Repair of Concrete (Depth Equal to or less than 5 Inches)	Sq. Ft.	———	142	142
*	Structural Repair of Concrete (Depth Greater than 5 Inches)	Sq. Ft.	———	2.5	2.5
*	Drainage Scuppers, DS-11	Each	4	———	4
*	Geotechnical Reinforcement	L. Sum	———	1	1
*	Pipe Underdrains for Structures 4"	Foot	———	317	317
*	Slope Wall Repair	Sq. Yd.	———	17	17
*	Expanded Polystyrene Fill	Cu. Yd.	———	196	196

* See Special Provisions

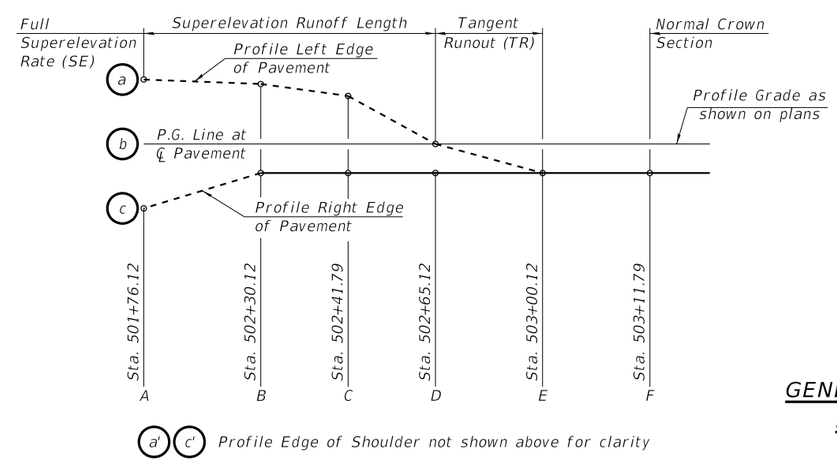

HORIZONTAL CURVE DATA

PI STA. = 499+63.95
Δ = 13° 07' 32" (RT)
D = 2° 22' 59"
R = 2,404.20'
T = 276.59'
L = 550.76'
E = 15.86'
e = 4.0%
T.R. = 31'
S.E. RUN = 81'
P.C. STA. = 496+87.36
P.T. STA. = 502+38.12

GENERAL DATA AND BILL OF MATERIALS
F.A.P. 0412 (ALPINE ROAD) OVER FOREST HILLS ROAD
SEC. 16-00620-00-BR
WINNEBAGO COUNTY
STATION 504+16.50
STRUCTURE NO. 101-3068

WILLETT HOFMANN & ASSOCIATES INC
ENGINEERING ARCHITECTURE LAND SURVEYING
809 EAST 2ND STREET, DIXON, IL 61021-0367
T: 815-284-3381 DESIGN FIRM: #184-000918

DESIGNED - PV	REVISED -		
CHECKED - PLP	REVISED -		
DRAWN - RDA	REVISED -		
CHECKED - PLP	REVISED -		

WINNEBAGO COUNTY
F.A.P. 0412 (ALPINE RD) OVER FOREST HILLS RD
STATION 504+16.50

STRUCTURAL SHEET NO. 2 OF 63 SHEETS

F.A.P. RTE.	SECTION	COUNTY	TOTAL SHEETS	SHEET NO.
412	16-00620-00-BR	WINNEBAGO	109	25
	WHA# 1017D17	CONTRACT NO. 85704		
	ILLINOIS FED. AID PROJECT 7K29(857)			

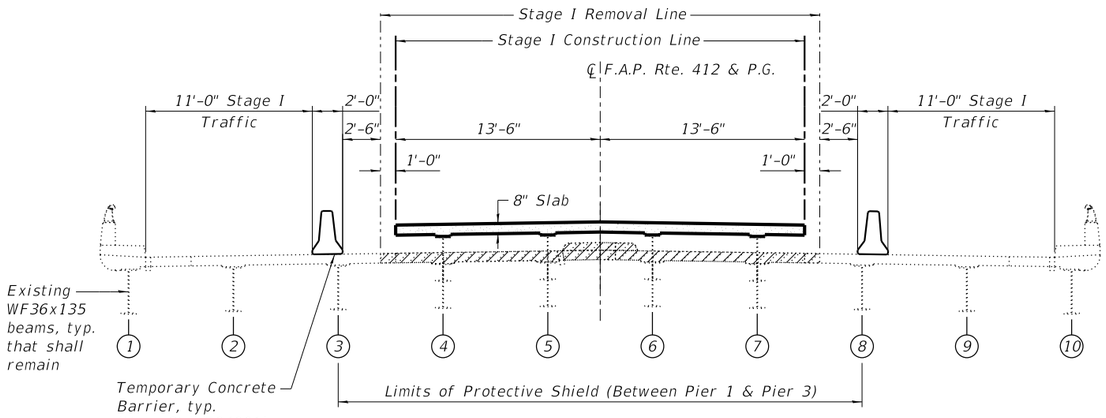

STAGE I REMOVAL & CONSTRUCTION

(Looking North)

GENERAL CONSTRUCTION SEQUENCE:

1.) Execute Stage I Traffic Plan & Relocate/Brace Utilities if necessary.

2.) Install Temporary Sheet Piling.

3.) Perform Stage I CONCRETE REMOVAL for Superstructure and Substructure per Contract. For Existing Beams (4 - 7), perform associated Steel Removal to Northeast "Temporary Project Staging Laydown Area" for applicable cleaning/painting/repair work.

4.) Construct and install applicable Stage I Substructure/Geotechnical/Backfill items. Install Proposed Bearings and perform ERECTING STRUCTURAL STEEL for Existing Beams (4 - 7). For Stage I, perform applicable REPAIR OF CONCRETE Contract work, and construct Proposed Stage I Superstructure and Roadway Pay Items.

5.) Repeat Steps 1, 3, and 4 for Stage II Traffic and Existing Beams (1 - 3 & 8 - 10)

6.) Repeat Step 1 for Stage III Traffic.

7.) Construct Proposed Median.

LEGEND:

Concrete/Railing Removal

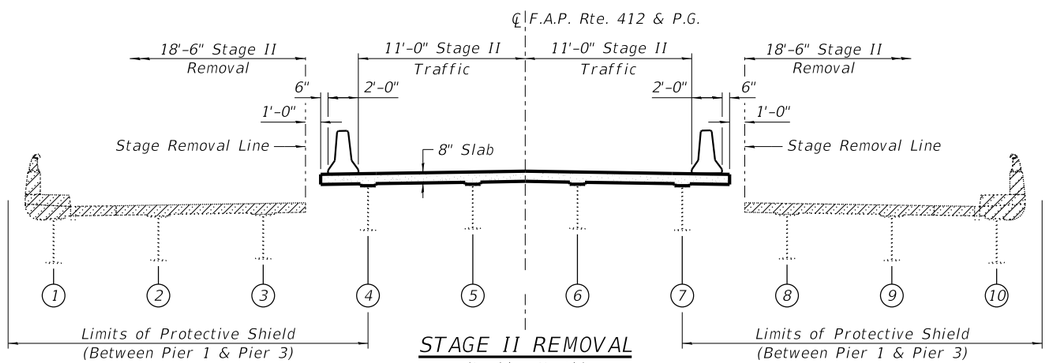

STAGE II REMOVAL

(Looking North)

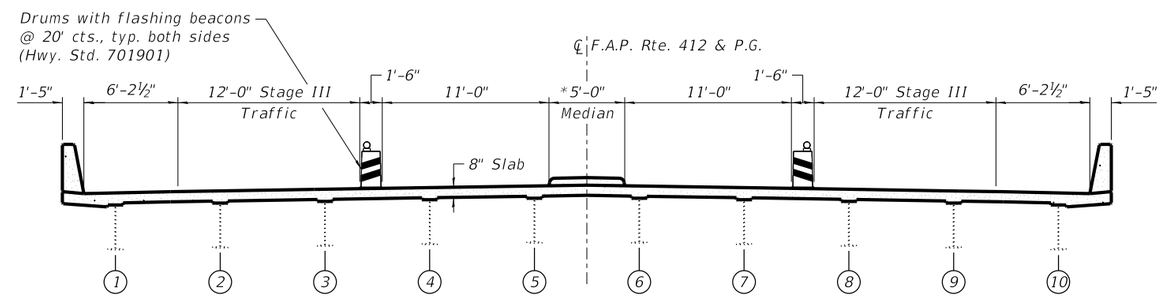

STAGE III CONSTRUCTION

(Looking North)

*Concrete Median is constructed in Stage III

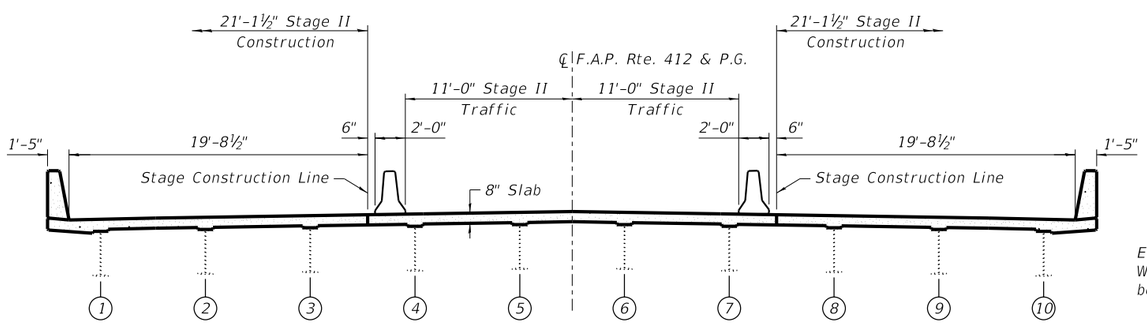

STAGE II CONSTRUCTION

(Looking North)

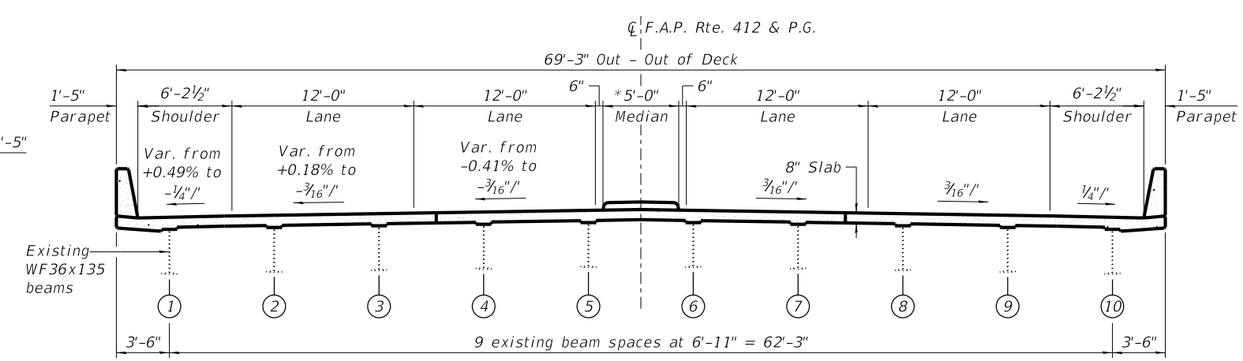

PROPOSED STRUCTURE

(Looking North)

WILLETT HOFMANN & ASSOCIATES INC
ENGINEERING ARCHITECTURE LAND SURVEYING
809 EAST 2ND STREET, DIXON, IL 61021-0367
T: 815-284-3381 DESIGN FIRM: #184-000918

DESIGNED - PV	REVISED -		
CHECKED - PLP	REVISED -		
DRAWN - RDA	REVISED -		
CHECKED - PV	REVISED -		

WINNEBAGO COUNTY
F.A.P. 0412 (ALPINE RD) OVER FOREST HILLS RD
STATION 504+16.50

STAGING AND PROTECTIVE SHIELD DETAILS
STRUCTURE NO. 101-3068

STRUCTURAL SHEET NO. 3 OF 63 SHEETS

F.A.P. RTE.	SECTION	COUNTY	TOTAL SHEETS	SHEET NO.
412	16-00620-00-BR	WINNEBAGO	109	26
	WHA* 1017D17	CONTRACT NO. 85704		
	ILLINOIS FED. AID PROJECT 7K29(857)			

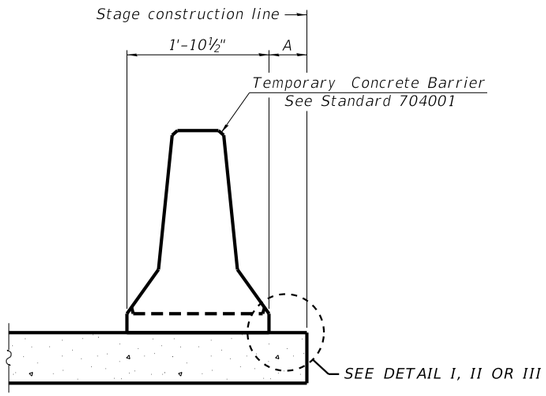

When "A" is 3'-1" or less, the temporary concrete barrier shall be restrained to the new slab according to Detail I, II or III. No restraint is required when "A" is greater than 3'-1".

NEW SLAB OR NEW DECK BEAM

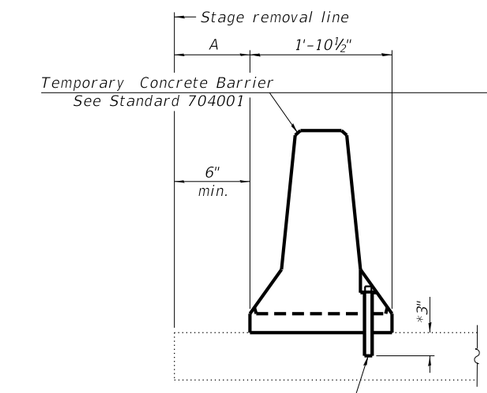

EXISTING SLAB

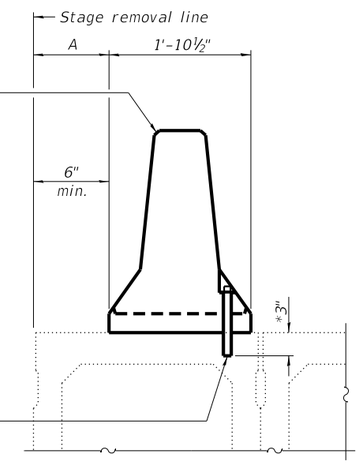

* When hot-mix asphalt wearng surface is present, embedment shall be 3" plus the wearing surface depth.

EXISTING DECK BEAM

SECTIONS THRU SLAB OR DECK BEAM

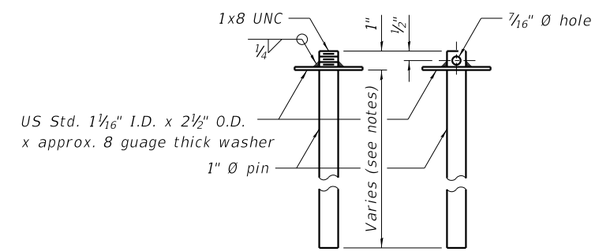

RESTRAINING PIN

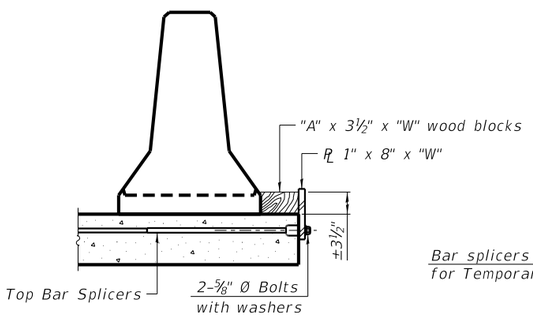

DETAIL I

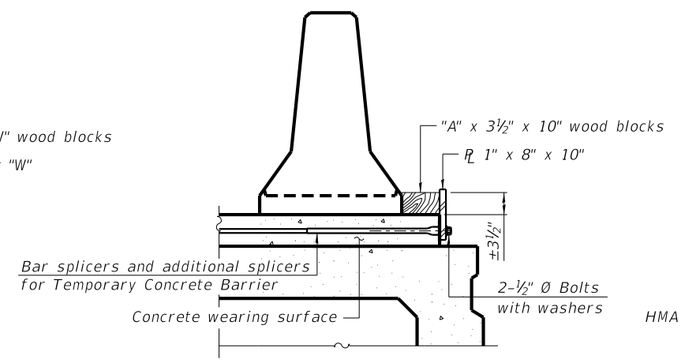

DETAIL II

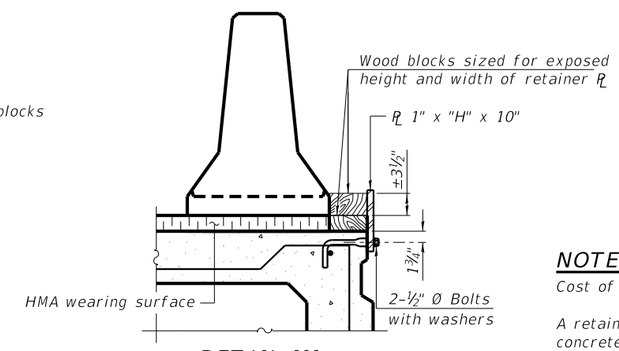

DETAIL III

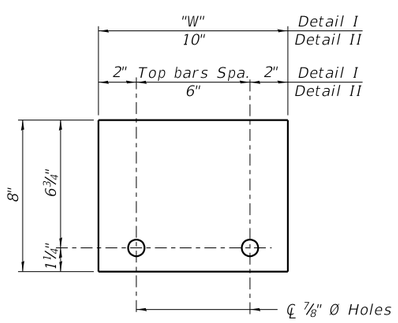

STEEL RETAINER PL 1" x 8" x "W"

(Detail I and II)

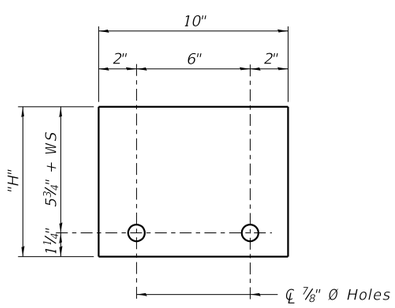

STEEL RETAINER PL 1" x "H" x 10"

(Detail III)

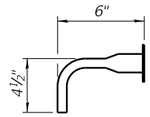

BAR SPLICER FOR #4 BAR - DETAIL III

NOTES:

Cost of retainer assembly is included with Temporary Concrete Barrier.

A retainer assembly shall be located at the approximate ℄ of each temporary concrete barrier.

The retainer plate shall not be removed until the concrete on the adjacent stage is ready to be poured. For Detail III applications the retainer plate shall not be removed until just prior to placing the adjacent beam.

When the 'A' dimension is less than 1½", the wood block shall be omitted and the barrier shall be placed in direct contact with the steel retainer plate. For deck beam applications the minimum required 'A' distance is 6" to accommodate the shear key clamping device.

Detail I - Installation for a new bridge deck or bridge slab.

Detail II - Installation for a new deck beam with an initial concrete wearing surface. Additional bar splicers shall be provided at 6'-0" centers and paired with the bar splicers of the concrete wearing surface reinforcement to accommodate the installation of the retainer assemblies. The cost of the additional bar splicers is included with the concrete wearing surface.

Detail III - Installation for a new deck beam with no initial wearing surface or with an initial hot-mix asphalt (HMA) wearing surface present. The deck beam directly beneath the temporary concrete barrier shall be fabricated with bar splicer inserts in the side of the beam, as detailed, to accommodate the installation of the retainer assemblies. A pair of bar splicers, 6" apart, shall be placed at 6'-0" centers along the length of the beam. The cost of the bar splicers is included with the deck beam.

WILLETT HOFMANN & ASSOCIATES INC
ENGINEERING ARCHITECTURE LAND SURVEYING
809 EAST 2ND STREET, DIXON, IL 61021-0367
T: 815-284-3381 DESIGN FIRM: #184-000918

DESIGNED - PV	REVISED -		
CHECKED - PLP	REVISED -		
DRAWN - RDA	REVISED -		
CHECKED - PLP	REVISED -		

WINNEBAGO COUNTY
F.A.P. 0412 (ALPINE RD) OVER FOREST HILLS RD
STATION 504+16.50

TEMPORARY CONCRETE BARRIER FOR STAGE CONSTRUCTION
STRUCTURE NO. 101-3068

STRUCTURAL SHEET NO. 4 OF 63 SHEETS

F.A.P. RTE.	SECTION	COUNTY	TOTAL SHEETS	SHEET NO.
412	16-00620-00-BR	WINNEBAGO	109	27
	WHA* 1017D17	CONTRACT NO. 85704		
	ILLINOIS FED. AID PROJECT 7K29(857)			

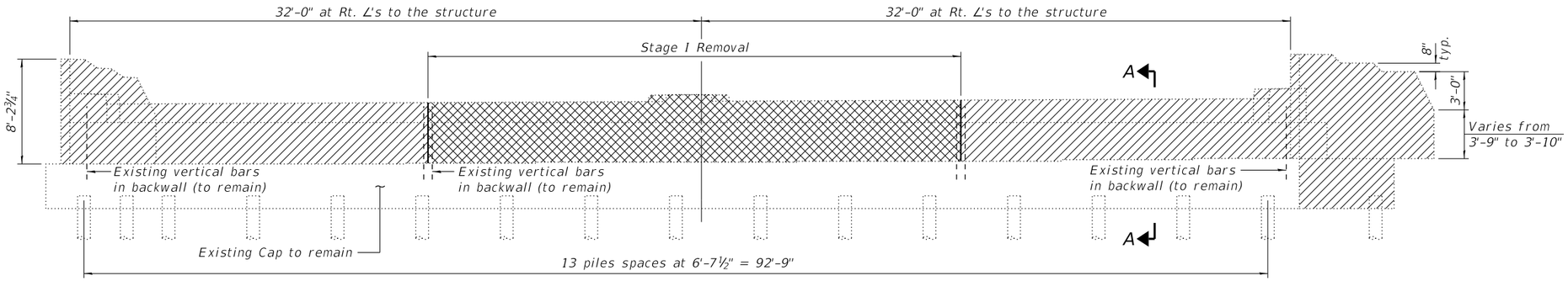

ELEVATION VIEW

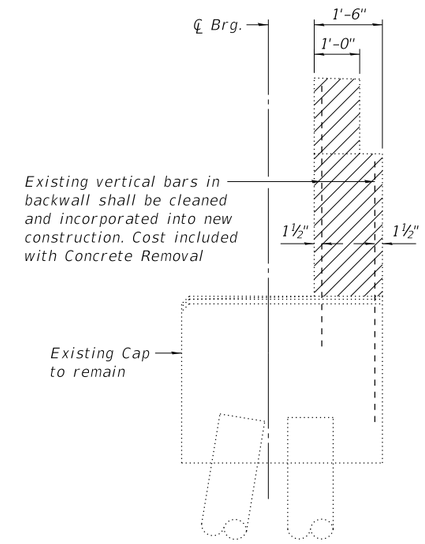

SECTION A-A

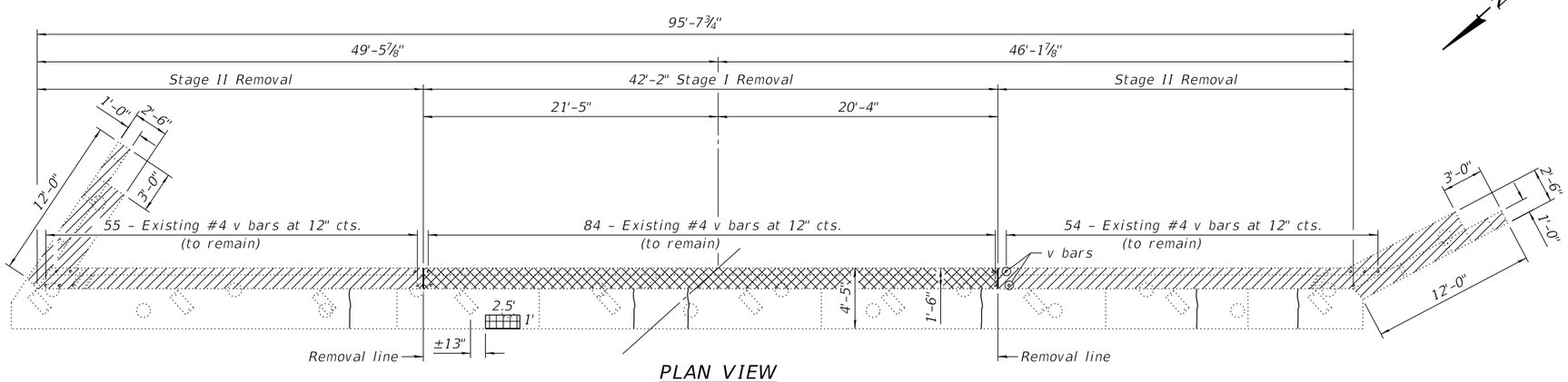

PLAN VIEW

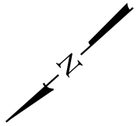

LEGEND

- Stage I Removal
- Stage II Removal
- Structural Repair Of Concrete (Depth Equal to or Less than 5 Inches)
- Epoxy Crack Injection

BILL OF MATERIAL

Item	Unit	Total
Concrete Removal	Cu. Yd.	34.9
Epoxy Crack Injection	Foot	18
Structural Repair Of Concrete (Depth Equal to or Less than 5 Inches)	Sq. Ft.	2.5

WILLETT HOFMANN & ASSOCIATES INC
ENGINEERING ARCHITECTURE LAND SURVEYING
809 EAST 2ND STREET, DIXON, IL 61021-0367
T: 815-284-3381 DESIGN FIRM: #184-000918

DESIGNED - EEL	REVISED -		
CHECKED - PLP	REVISED -		
DRAWN - FDL	REVISED -		
CHECKED - PLP	REVISED -		

WINNEBAGO COUNTY
F.A.P. 0412 (ALPINE RD) OVER FOREST HILLS RD
STATION 504+16.50

SOUTH ABUTMENT REMOVAL DETAILS
STRUCTURE NO. 101-3068

STRUCTURAL SHEET NO. 5 OF 63 SHEETS

F.A.P. RTE.	SECTION	COUNTY	TOTAL SHEETS	SHEET NO.
412	16-00620-00-BR	WINNEBAGO	109	28
WHA# 1017D17		CONTRACT NO. 85704		
	ILLINOIS	FED. AID PROJECT 7K29(857)		

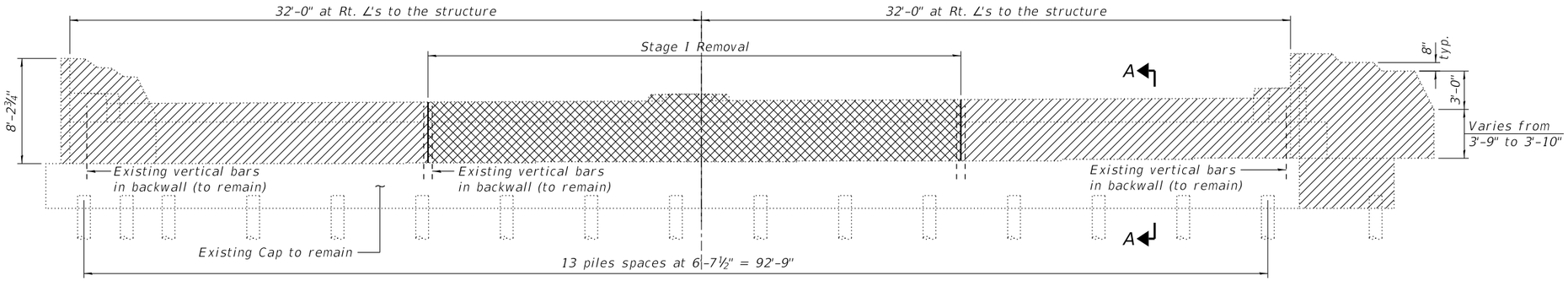

ELEVATION VIEW

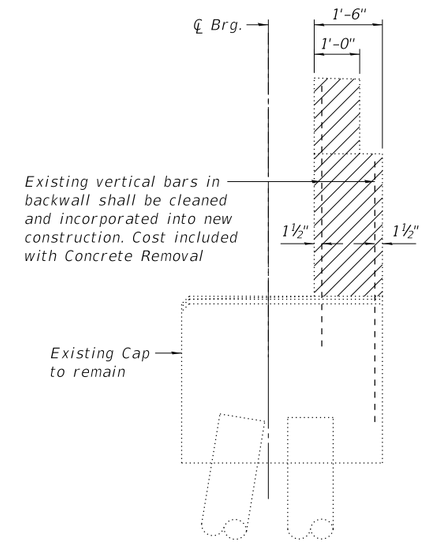

SECTION A-A

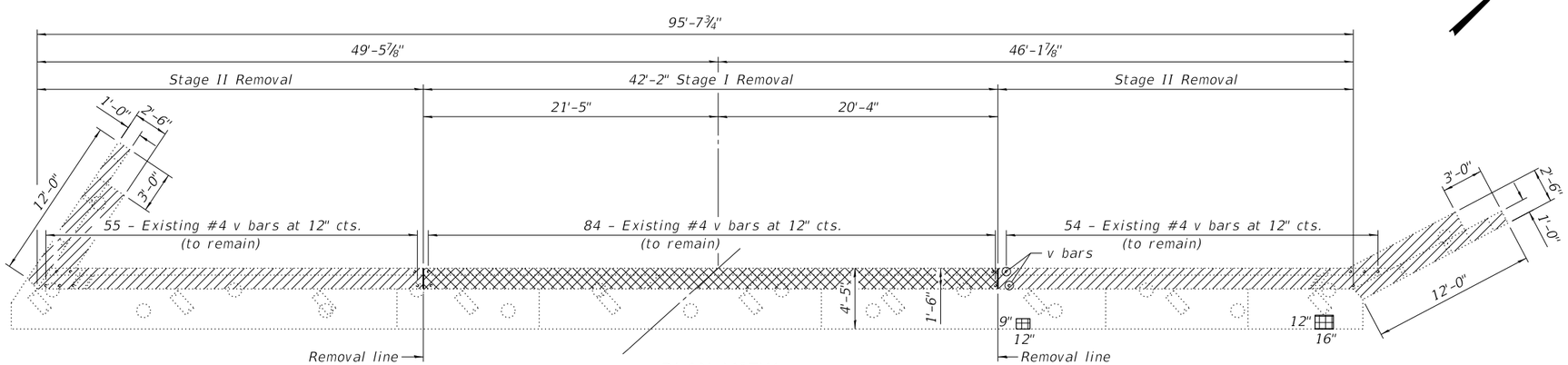

PLAN VIEW

N

LEGEND

- Stage I Removal
- Stage II Removal
- Structural Repair Of Concrete (Depth Equal to or Less than 5 Inches)
- Epoxy Crack Injection

BILL OF MATERIAL

Item	Unit	Total
Concrete Removal	Cu. Yd.	34.5
Structural Repair Of Concrete (Depth Equal to or Less than 5 Inches)	Sq. Ft.	2.1

WILLETT HOFMANN & ASSOCIATES INC
ENGINEERING ARCHITECTURE LAND SURVEYING
809 EAST 2ND STREET, DIXON, IL 61021-0367
T: 815-284-3381 DESIGN FIRM: #184-000918

DESIGNED - EEL	REVISED -		
CHECKED - PLP	REVISED -		
DRAWN - FDL	REVISED -		
CHECKED - PLP	REVISED -		

WINNEBAGO COUNTY
F.A.P. 0412 (ALPINE RD) OVER FOREST HILLS RD
STATION 504+16.50

NORTH ABUTMENT REMOVAL DETAILS
STRUCTURE NO. 101-3068
STRUCTURAL SHEET NO. 6 OF 63 SHEETS

F.A.P. RTE.	SECTION	COUNTY	TOTAL SHEETS	SHEET NO.
412	16-00620-00-BR	WINNEBAGO	109	29
	WHA# 1017D17	CONTRACT NO. 85704		
	ILLINOIS FED. AID PROJECT 7K29(857)			

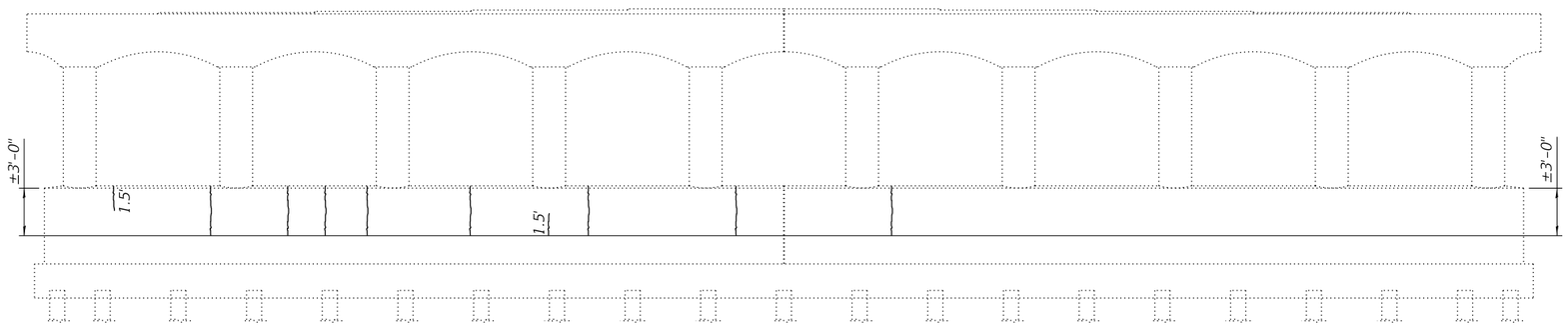

ELEVATION
(Looking South)

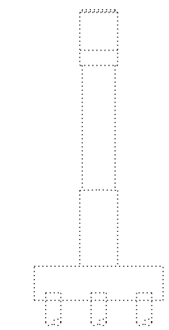

END SECTION

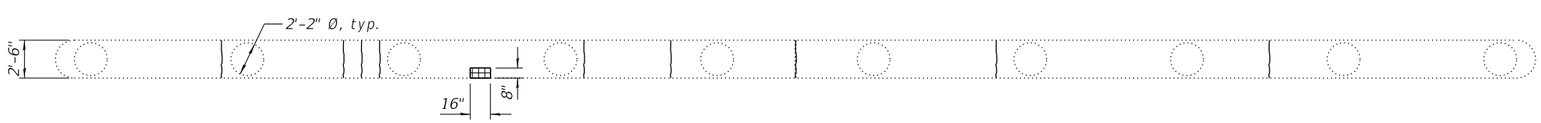

TOP PLAN
(Showing Top of Webwall)

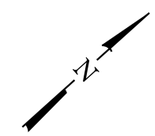

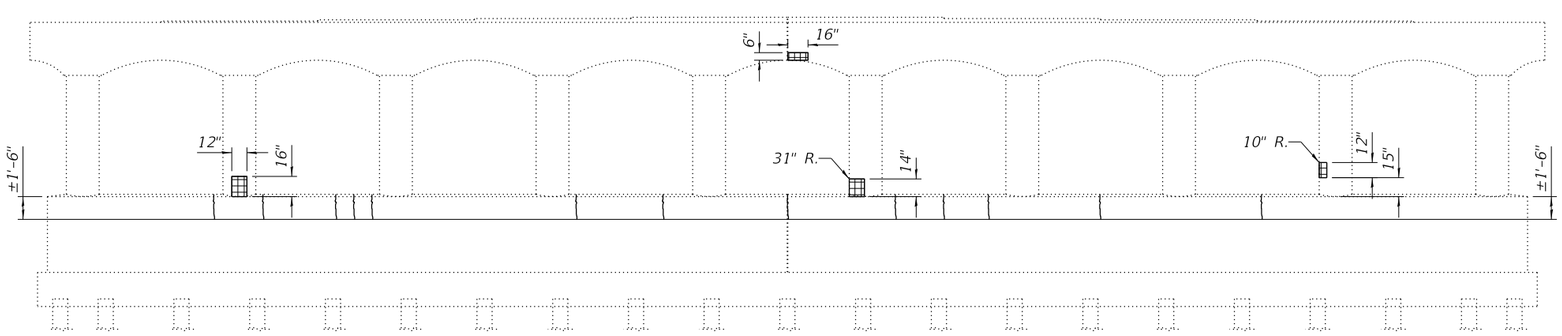

ELEVATION
(Looking North)

LEGEND

Structural Repair Of Concrete (Equal to or Less than 5 Inches)

Epoxy Crack Injection

BILL OF MATERIAL

Item	Unit	Total
Epoxy Crack Injection	Foot	69
Structural Repair Of Concrete (Depth Equal to or Less than 5 Inches)	Sq. Ft.	6.7

WILLETT HOFMANN & ASSOCIATES INC
ENGINEERING ARCHITECTURE LAND SURVEYING
809 EAST 2ND STREET, DIXON, IL 61021-0367
T: 815-284-3381 DESIGN FIRM: #184-000918

DESIGNED - PLP	REVISED -		
CHECKED - BKC	REVISED -		
DRAWN - FDL	REVISED -		
CHECKED - BKC	REVISED -		

WINNEBAGO COUNTY
F.A.P. 0412 (ALPINE RD) OVER FOREST HILLS RD
STATION 504+16.50

PIER 1 REPAIR DETAILS
STRUCTURE NO. 101-3068

STRUCTURAL SHEET NO. 7 OF 63 SHEETS

F.A.P. RTE.	SECTION	COUNTY	TOTAL SHEETS	SHEET NO.
412	16-00620-00-BR	WINNEBAGO	109	30
	WHA* 1017D17	CONTRACT NO. 85704		
	ILLINOIS FED. AID PROJECT 7K29(857)			

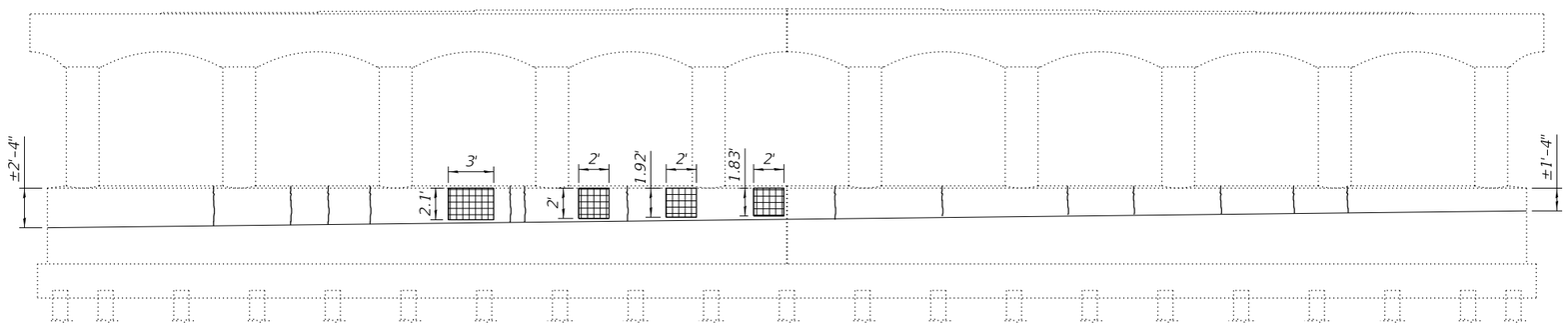

ELEVATION
(Looking South)

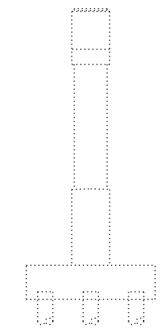

END SECTION

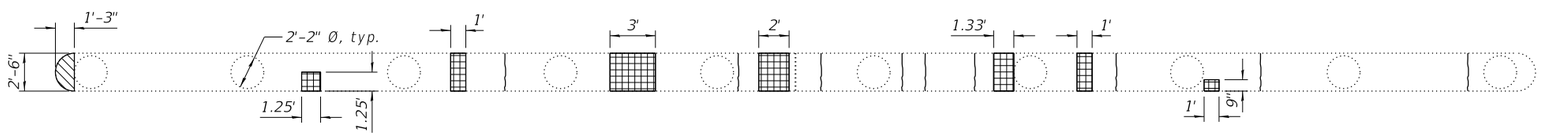

TOP PLAN
(Showing Top of Webwall)

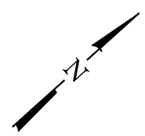

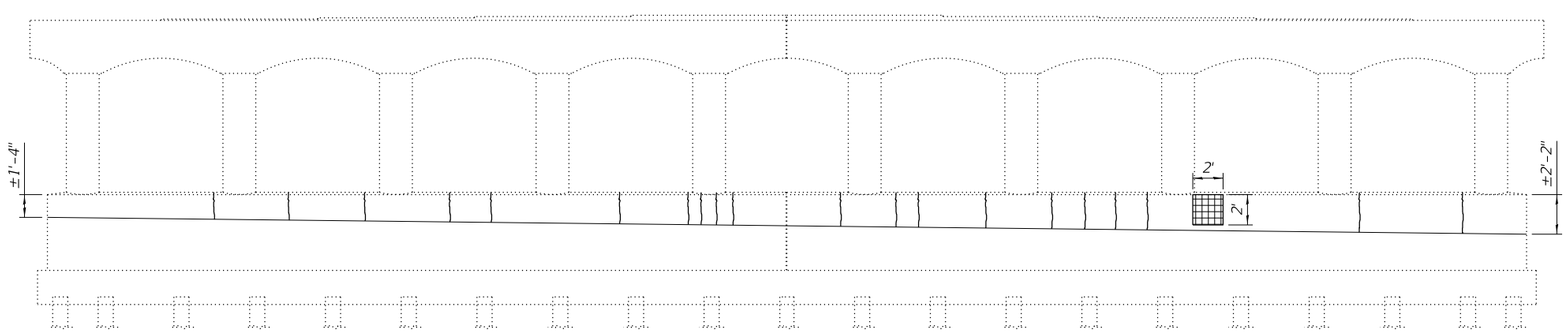

ELEVATION
(Looking North)

LEGEND

- Structural Repair Of Concrete (Equal to or Less than 5 Inches)
- Structural Repair Of Concrete (Depth Greater than 5 Inches)
- Epoxy Crack Injection

BILL OF MATERIAL

Item	Unit	Total
Epoxy Crack Injection	Foot	86
Structural Repair Of Concrete (Depth Equal to or Less than 5 Inches)	Sq. Ft.	44.9
Structural Repair Of Concrete (Depth Greater than 5 Inches)	Sq. Ft..	2.5

WILLETT HOFMANN & ASSOCIATES INC
ENGINEERING ARCHITECTURE LAND SURVEYING
809 EAST 2ND STREET, DIXON, IL 61021-0367
T: 815-284-3381 DESIGN FIRM: #184-000918

DESIGNED - PLP	REVISED -		
CHECKED - BKC	REVISED -		
DRAWN - FDL	REVISED -		
CHECKED - BKC	REVISED -		

WINNEBAGO COUNTY
F.A.P. 0412 (ALPINE RD) OVER FOREST HILLS RD
STATION 504+16.50

PIER 2 REPAIR DETAILS
STRUCTURE NO. 101-3068
STRUCTURAL SHEET NO. 8 OF 63 SHEETS

F.A.P. RTE.	SECTION	COUNTY	TOTAL SHEETS	SHEET NO.
412	16-00620-00-BR	WINNEBAGO	109	31
WHA# 1017D17		CONTRACT NO. 85704		
	ILLINOIS	FED. AID PROJECT 7K29(857)		

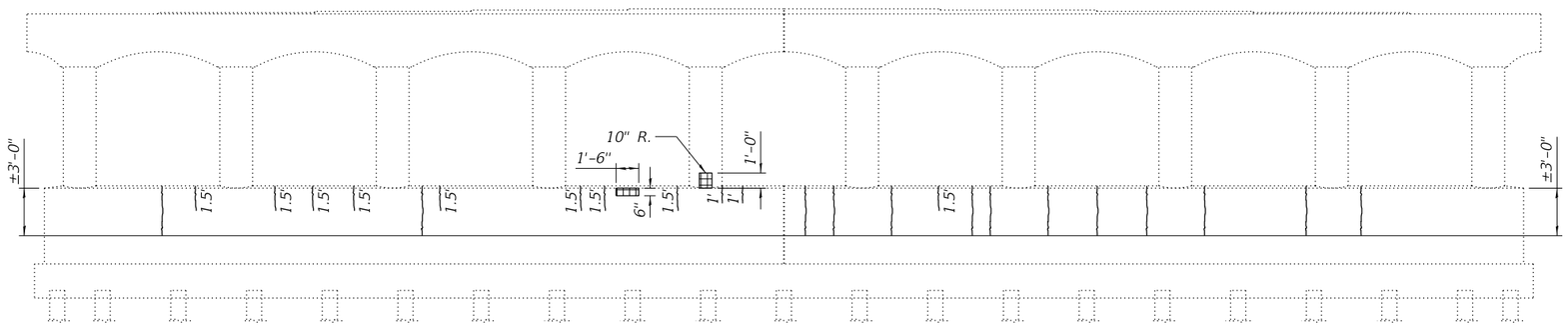

ELEVATION
(Looking North)

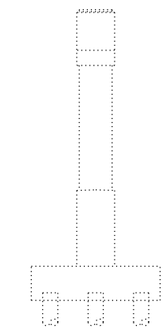

END SECTION

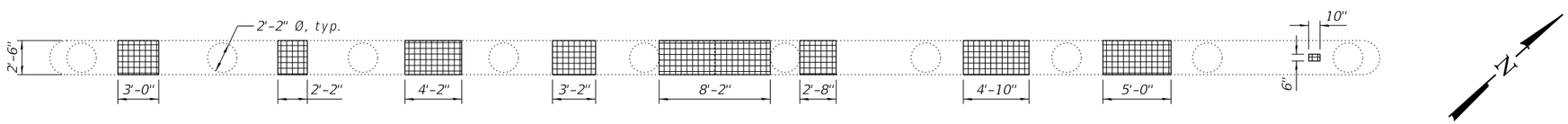

TOP PLAN
(Showing Top of Webwall)

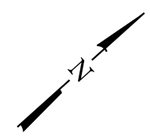

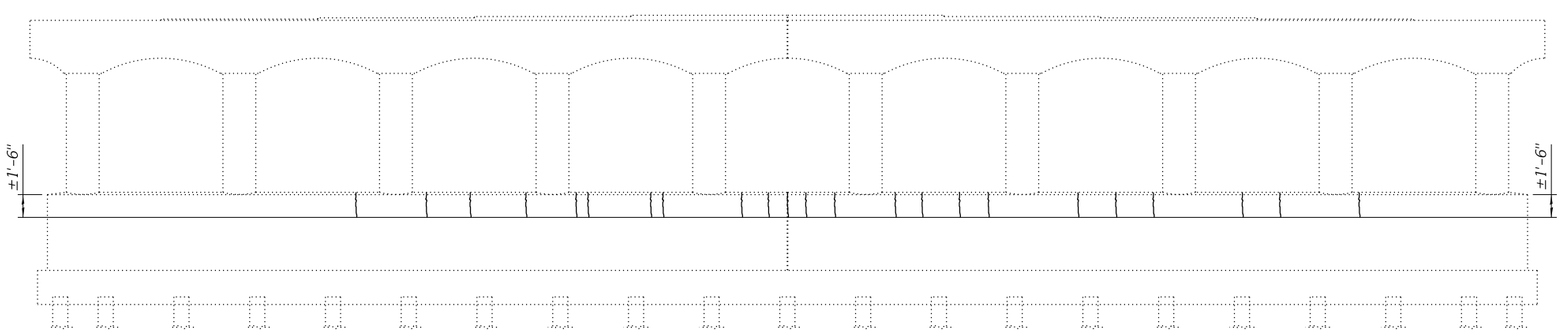

ELEVATION
(Looking South)

LEGEND

Structural Repair Of Concrete (Equal to or Less than 5 Inches)

Epoxy Crack Injection

BILL OF MATERIAL

Item	Unit	Total
Epoxy Crack Injection	Foot	89
Structural Repair Of Concrete (Depth Equal to or Less than 5 Inches)	Sq. Ft.	85.8

WILLETT HOFMANN & ASSOCIATES INC
ENGINEERING ARCHITECTURE LAND SURVEYING
809 EAST 2ND STREET, DIXON, IL 61021-0367
T: 815-284-3381 DESIGN FIRM: #184-000918

DESIGNED - PLP	REVISED -		
CHECKED - BKC	REVISED -		
DRAWN - FDL	REVISED -		
CHECKED - BKC	REVISED -		

WINNEBAGO COUNTY
F.A.P. 0412 (ALPINE RD) OVER FOREST HILLS RD
STATION 504+16.50

PIER 3 REPAIR DETAILS
STRUCTURE NO. 101-3068

STRUCTURAL SHEET NO. 9 OF 63 SHEETS

F.A.P. RTE.	SECTION	COUNTY	TOTAL SHEETS	SHEET NO.
412	16-00620-00-BR	WINNEBAGO	109	32
	WHA# 1017D17	CONTRACT NO. 85704		
	ILLINOIS FED. AID PROJECT 7K29(857)			

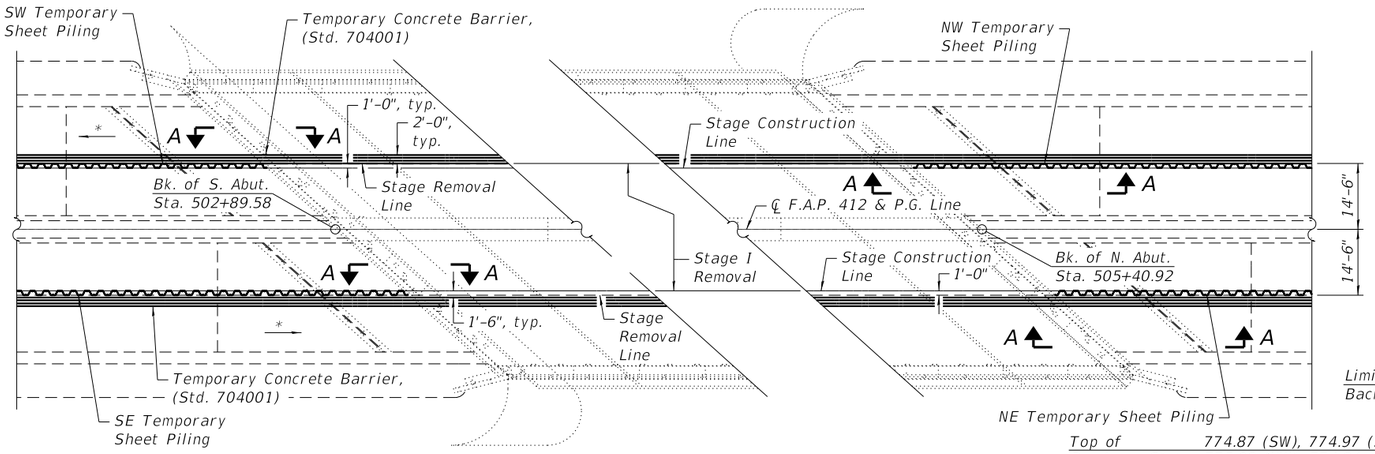

PLAN VIEW - STAGE I

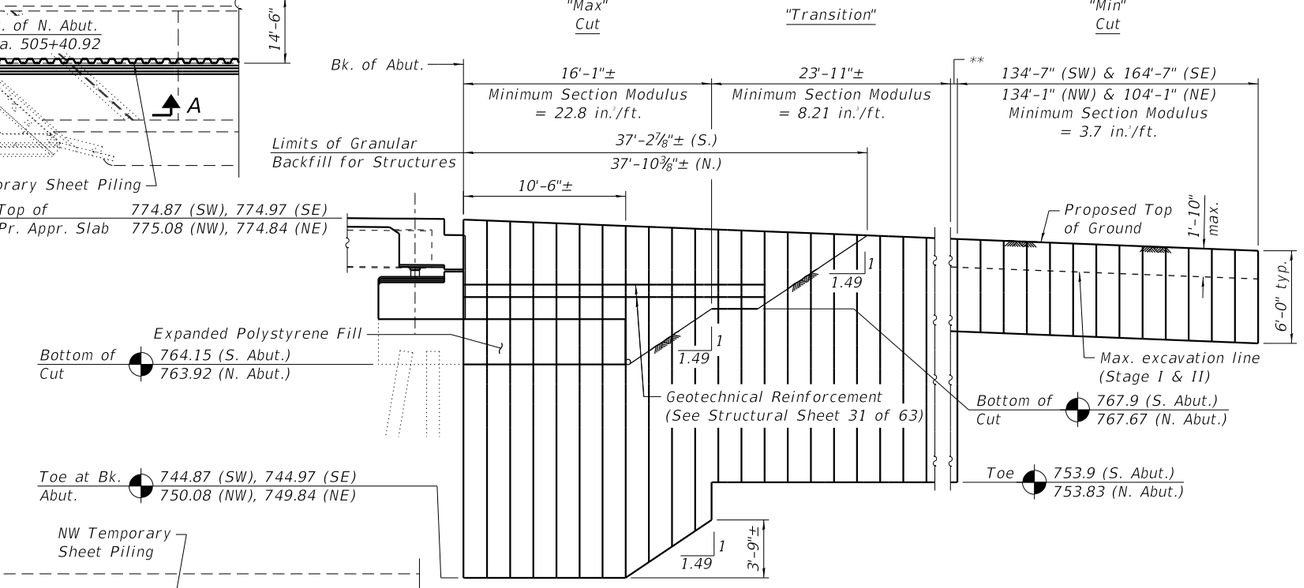

SECTION A-A

(Dimensions along ℄ Roadway)

** "Transition" sheets beyond 40'-0" shall be included in the unit price per L. Sum of Geotechnical Reinforcement. See Special Provisions.

*** Drive Temporary Sheet Piling to Elev. 765.48 (S.) and Elev. 765.25 (N.) for Pipe Underdrain for Structures, 4" installation at Stage line.

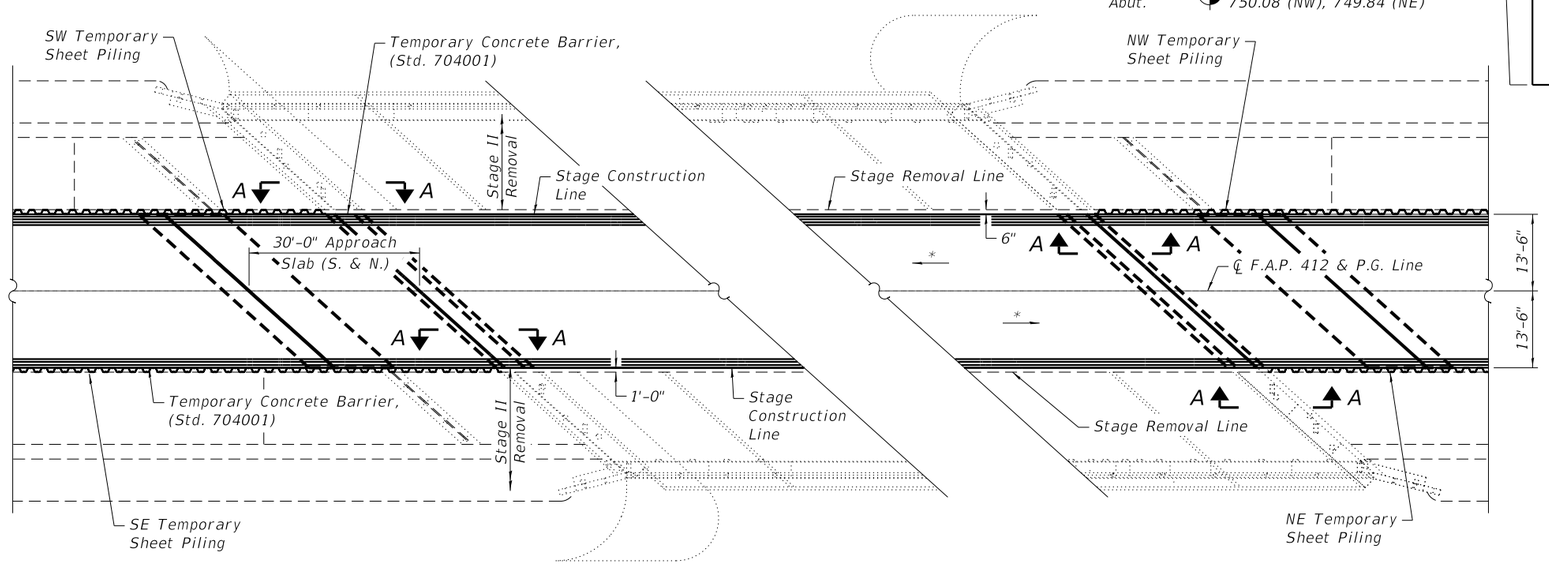

PLAN VIEW - STAGE II

BILL OF MATERIAL

Item	Unit	Total
Temporary Sheet Piling	Sq. Ft.	6,926

NOTE:

If the Contractor chooses to alter the temporary cantilevered sheet piling design requirements shown on the plans, a design submittal including plan details and calculations will be required for review and acceptance by the Engineer.

WILLETT HOFMANN & ASSOCIATES INC
ENGINEERING ARCHITECTURE LAND SURVEYING
809 EAST 2ND STREET, DIXON, IL 61021-0367
T: 815-284-3381 DESIGN FIRM: #184-000918

DESIGNED - PV	REVISED -		
CHECKED - PLP	REVISED -		
DRAWN - RDA	REVISED -		
CHECKED - PLP	REVISED -		

WINNEBAGO COUNTY
F.A.P. 0412 (ALPINE RD) OVER FOREST HILLS RD
STATION 504+16.50

TEMPORARY SHEET PILING
STRUCTURE NO. 101-3068

STRUCTURAL SHEET NO. 10 OF 63 SHEETS

F.A.P. RTE.	SECTION	COUNTY	TOTAL SHEETS	SHEET NO.
412	16-00620-00-BR	WINNEBAGO	109	33
	WHA# 1017D17	CONTRACT NO. 85704		
		ILLINOIS FED. AID PROJECT 7K29(857)		

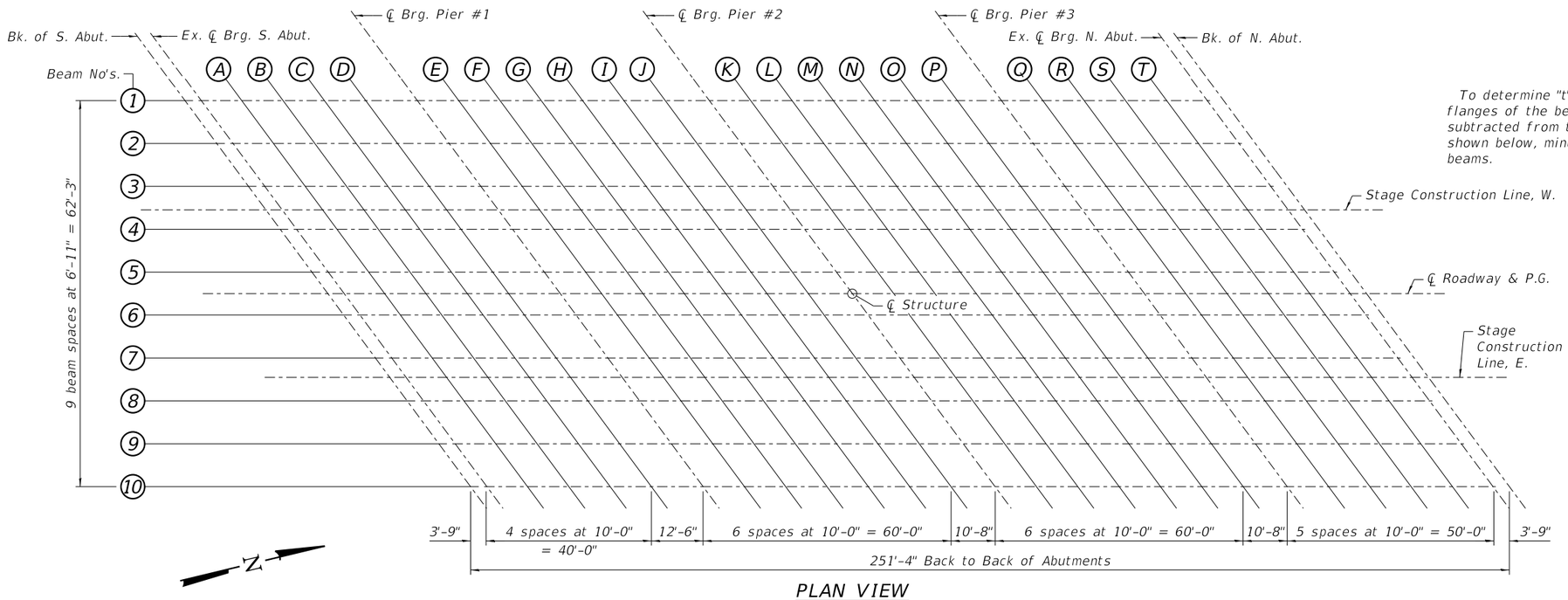

PLAN VIEW

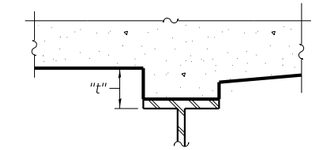

ALL FILLETS

To determine "t": After all structural steel has been erected, elevations of the top flanges of the beams shall be taken at intervals shown below. These elevations subtracted from the "Theoretical Grade Elevations Adjusted for Dead Load Deflection" shown below, minus slab thickness, equals the fillet heights "t" above top flange of beams.

FILLET HEIGHTS

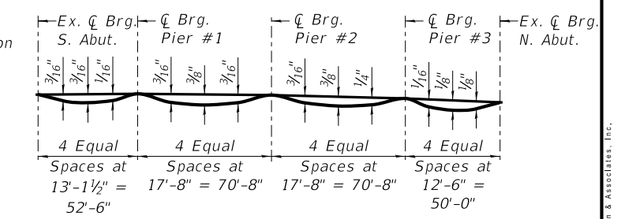

DEAD LOAD DEFLECTION DIAGRAM

(Includes weight of concrete only.)

NOTE:
The above deflections are not to be used in the field if the engineer is working from the grade elevations adjusted for dead load deflections as shown above.

BEAM 1

Location	Station	Offset Lt.	Theoretical Grade Elevations	Theoretical Grade Elevations Adjusted For Dead Load Deflection
Bk. of S. Abut.	502+55.02	31.12	774.84	774.84
Ex. ℄ Brg. S. Abut.	502+58.77	31.12	774.83	774.83
A	502+68.77	31.12	774.81	774.82
B	502+78.77	31.12	774.78	774.79
C	502+88.77	31.12	774.73	774.74
D	502+98.77	31.12	774.67	774.68
℄ Brg. Pier #1	503+11.27	31.12	774.72	774.72
E	503+21.27	31.12	774.79	774.80
F	503+31.27	31.12	774.85	774.87
G	503+41.27	31.12	774.91	774.94
H	503+51.27	31.12	774.96	774.99
I	503+61.27	31.12	775.00	775.02
J	503+71.27	31.12	775.03	775.04
℄ Brg. Pier #2	503+81.94	31.12	775.07	775.07
K	503+91.94	31.12	775.09	775.09
L	504+01.94	31.12	775.10	775.12
M	504+11.94	31.12	775.11	775.14
N	504+21.94	31.12	775.12	775.15
O	504+31.94	31.12	775.12	775.14
P	504+41.94	31.12	775.11	775.12
℄ Brg. Pier #3	504+52.60	31.12	775.09	775.09
Q	504+62.60	31.12	775.07	775.07
R	504+72.60	31.12	775.04	775.05
S	504+82.60	31.12	775.00	775.02
T	504+92.60	31.12	774.96	774.97
Ex. ℄ Brg. N. Abut.	505+02.60	31.12	774.92	774.92
Bk. of N. Abut.	505+06.35	31.12	774.90	774.90

BEAM 2

Location	Station	Offset Lt.	Theoretical Grade Elevations	Theoretical Grade Elevations Adjusted For Dead Load Deflection
Bk. of S. Abut.	502+62.70	24.21	774.82	774.82
Ex. ℄ Brg. S. Abut.	502+66.45	24.21	774.82	774.82
A	502+76.45	24.21	774.82	774.83
B	502+86.45	24.21	774.81	774.82
C	502+96.45	24.21	774.78	774.80
D	503+06.45	24.21	774.82	774.82
℄ Brg. Pier #1	503+18.95	24.21	774.91	774.91
E	503+28.95	24.21	774.97	774.98
F	503+38.95	24.21	775.03	775.05
G	503+48.95	24.21	775.08	775.10
H	503+58.95	24.21	775.12	775.15
I	503+68.95	24.21	775.16	775.18
J	503+78.95	24.21	775.19	775.19
℄ Brg. Pier #2	503+89.61	24.21	775.21	775.21
K	503+99.61	24.21	775.23	775.24
L	504+09.61	24.21	775.24	775.26
M	504+19.61	24.21	775.25	775.28
N	504+29.61	24.21	775.25	775.28
O	504+39.61	24.21	775.24	775.26
P	504+49.61	24.21	775.23	775.23
℄ Brg. Pier #3	504+60.28	24.21	775.20	775.20
Q	504+70.28	24.21	775.18	775.18
R	504+80.28	24.21	775.14	775.15
S	504+90.28	24.21	775.10	775.12
T	505+00.28	24.21	775.06	775.07
Ex. ℄ Brg. N. Abut.	505+10.28	24.21	775.01	775.01
Bk. of N. Abut.	505+14.03	24.21	774.98	774.98

BEAM 3

Location	Station	Offset Lt.	Theoretical Grade Elevations	Theoretical Grade Elevations Adjusted For Dead Load Deflection
Bk. of S. Abut.	502+70.38	17.29	774.84	774.84
Ex. ℄ Brg. S. Abut.	502+74.13	17.29	774.85	774.85
A	502+84.13	17.29	774.87	774.88
B	502+94.13	17.29	774.88	774.90
C	503+04.13	17.29	774.91	774.92
D	503+14.13	17.29	774.98	774.99
℄ Brg. Pier #1	503+26.63	17.29	775.06	775.06
E	503+36.63	17.29	775.12	775.13
F	503+46.63	17.29	775.17	775.19
G	503+56.63	17.29	775.22	775.25
H	503+66.63	17.29	775.26	775.28
I	503+76.63	17.29	775.29	775.31
J	503+86.63	17.29	775.31	775.32
℄ Brg. Pier #2	503+97.30	17.29	775.34	775.34
K	504+07.30	17.29	775.35	775.35
L	504+17.30	17.29	775.36	775.37
M	504+27.30	17.29	775.36	775.39
N	504+37.30	17.29	775.35	775.38
O	504+47.30	17.29	775.34	775.36
P	504+57.30	17.29	775.32	775.33
℄ Brg. Pier #3	504+67.96	17.29	775.29	775.29
Q	504+77.96	17.29	775.26	775.26
R	504+87.96	17.29	775.22	775.23
S	504+97.96	17.29	775.18	775.19
T	505+07.96	17.29	775.13	775.13
Ex. ℄ Brg. N. Abut.	505+17.96	17.29	775.07	775.07
Bk. of N. Abut.	505+21.71	17.29	775.05	775.05

WILLETT HOFMANN & ASSOCIATES INC
ENGINEERING ARCHITECTURE LAND SURVEYING
809 EAST 2ND STREET, DIXON, IL 61021-0367
T: 815-284-3381 DESIGN FIRM: #184-000918

DESIGNED - PV	REVISED -		
CHECKED - PLP	REVISED -		
DRAWN - RDA	REVISED -		
CHECKED - PLP	REVISED -		

WINNEBAGO COUNTY
F.A.P. 0412 (ALPINE RD) OVER FOREST HILLS RD
STATION 504+16.50

TOP OF SLAB ELEVATIONS
STRUCTURE NO. 101-3068

STRUCTURAL SHEET NO. 11 OF 63 SHEETS

F.A.P. RTE.	SECTION	COUNTY	TOTAL SHEETS	SHEET NO.
412	16-00620-00-BR	WINNEBAGO	109	34
	WHA# 1017D17	CONTRACT NO. 85704		
	ILLINOIS	FED. AID PROJECT 7K29(857)		

STAGE CONSTRUCTION LINE, W.

Location	Station	Offset Lt.	Theoretical Grade Elevations	Theoretical Grade Elevations Adjusted For Dead Load Deflection
Bk. of S. Abut.	502+74.59	13.50	774.87	774.87
Ex. ℄ Brg. S. Abut.	502+78.34	13.50	774.88	774.88
A	502+88.34	13.50	774.91	774.93
B	502+98.34	13.50	774.94	774.95
C	503+08.34	13.50	775.00	775.01
D	503+18.34	13.50	775.07	775.08
℄ Brg. Pier #1	503+30.84	13.50	775.15	775.15
E	503+40.84	13.50	775.20	775.21
F	503+50.84	13.50	775.25	775.27
G	503+60.84	13.50	775.29	775.32
H	503+70.84	13.50	775.33	775.36
I	503+80.84	13.50	775.36	775.38
J	503+90.84	13.50	775.38	775.39
℄ Brg. Pier #2	504+01.51	13.50	775.40	775.40
K	504+11.51	13.50	775.41	775.42
L	504+21.51	13.50	775.42	775.43
M	504+31.51	13.50	775.41	775.44
N	504+41.51	13.50	775.40	775.44
O	504+51.51	13.50	775.39	775.41
P	504+61.51	13.50	775.37	775.38
℄ Brg. Pier #3	504+72.17	13.50	775.34	775.34
Q	504+82.17	13.50	775.30	775.30
R	504+92.17	13.50	775.26	775.27
S	505+02.17	13.50	775.22	775.23
T	505+12.17	13.50	775.16	775.17
Ex. ℄ Brg. N. Abut.	505+22.17	13.50	775.10	775.10
Bk. of N. Abut.	505+25.92	13.50	775.08	775.08

BEAM 4

Location	Station	Offset Lt.	Theoretical Grade Elevations	Theoretical Grade Elevations Adjusted For Dead Load Deflection
Bk. of S. Abut.	502+78.06	10.38	774.90	774.90
Ex. ℄ Brg. S. Abut.	502+81.81	10.38	774.92	774.92
A	502+91.81	10.38	774.96	774.97
B	503+01.81	10.38	775.00	775.02
C	503+11.81	10.38	775.07	775.09
D	503+21.81	10.38	775.14	775.15
℄ Brg. Pier #1	503+34.31	10.38	775.22	775.22
E	503+44.31	10.38	775.27	775.28
F	503+54.31	10.38	775.32	775.34
G	503+64.31	10.38	775.36	775.38
H	503+74.31	10.38	775.39	775.42
I	503+84.31	10.38	775.42	775.44
J	503+94.31	10.38	775.44	775.44
℄ Brg. Pier #2	504+04.97	10.38	775.45	775.45
K	504+14.97	10.38	775.46	775.47
L	504+24.97	10.38	775.46	775.48
M	504+34.97	10.38	775.46	775.49
N	504+44.97	10.38	775.45	775.48
O	504+54.97	10.38	775.43	775.45
P	504+64.97	10.38	775.41	775.42
℄ Brg. Pier #3	504+75.64	10.38	775.38	775.38
Q	504+85.64	10.38	775.34	775.34
R	504+95.64	10.38	775.30	775.30
S	505+05.64	10.38	775.25	775.26
T	505+15.64	10.38	775.19	775.20
Ex. ℄ Brg. N. Abut.	505+25.64	10.38	775.13	775.13
Bk. of N. Abut.	505+29.39	10.38	775.10	775.10

BEAM 5

Location	Station	Offset Lt.	Theoretical Grade Elevations	Theoretical Grade Elevations Adjusted For Dead Load Deflection
Bk. of S. Abut.	502+85.74	3.46	775.00	775.00
Ex. ℄ Brg. S. Abut.	502+89.49	3.46	775.03	775.03
A	502+99.49	3.46	775.09	775.10
B	503+09.49	3.46	775.17	775.18
C	503+19.49	3.46	775.23	775.25
D	503+29.49	3.46	775.30	775.30
℄ Brg. Pier #1	503+41.99	3.46	775.37	775.37
E	503+51.99	3.46	775.41	775.42
F	503+61.99	3.46	775.46	775.48
G	503+71.99	3.46	775.49	775.52
H	503+81.99	3.46	775.52	775.55
I	503+91.99	3.46	775.54	775.56
J	504+01.99	3.46	775.56	775.57
℄ Brg. Pier #2	504+12.66	3.46	775.57	775.57
K	504+22.66	3.46	775.57	775.58
L	504+32.66	3.46	775.57	775.59
M	504+42.66	3.46	775.56	775.59
N	504+52.66	3.46	775.54	775.58
O	504+62.66	3.46	775.52	775.54
P	504+72.66	3.46	775.49	775.50
℄ Brg. Pier #3	504+83.32	3.46	775.46	775.46
Q	504+93.32	3.46	775.41	775.42
R	505+03.32	3.46	775.37	775.37
S	505+13.32	3.46	775.31	775.32
T	505+23.32	3.46	775.25	775.26
Ex. ℄ Brg. N. Abut.	505+33.32	3.46	775.18	775.18
Bk. of N. Abut.	505+37.07	3.46	775.16	775.16

CENTERLINE OF ROADWAY & P.G.L.

Location	Station	Offset Lt.	Theoretical Grade Elevations	Theoretical Grade Elevations Adjusted For Dead Load Deflection
Bk. of S. Abut.	502+89.58	0.00	775.06	775.06
Ex. ℄ Brg. S. Abut.	502+93.33	0.00	775.10	775.10
A	503+03.33	0.00	775.17	775.19
B	503+13.33	0.00	775.25	775.26
C	503+23.33	0.00	775.31	775.33
D	503+33.33	0.00	775.37	775.38
℄ Brg. Pier #1	503+45.83	0.00	775.44	775.44
E	503+55.83	0.00	775.48	775.49
F	503+65.83	0.00	775.52	775.54
G	503+75.83	0.00	775.56	775.59
H	503+85.83	0.00	775.58	775.61
I	503+95.83	0.00	775.60	775.62
J	504+05.83	0.00	775.62	775.62
℄ Brg. Pier #2	504+16.50	0.00	775.62	775.62
K	504+26.50	0.00	775.63	775.63
L	504+36.50	0.00	775.62	775.64
M	504+46.50	0.00	775.61	775.64
N	504+56.50	0.00	775.59	775.62
O	504+66.50	0.00	775.57	775.59
P	504+76.50	0.00	775.53	775.54
℄ Brg. Pier #3	504+87.17	0.00	775.49	775.49
Q	504+97.17	0.00	775.45	775.45
R	505+07.17	0.00	775.40	775.41
S	505+17.17	0.00	775.34	775.36
T	505+27.17	0.00	775.28	775.29
Ex. ℄ Brg. N. Abut.	505+37.17	0.00	775.21	775.21
Bk. of N. Abut.	505+40.92	0.00	775.18	775.18

BEAM 6

Location	Station	Offset Rt.	Theoretical Grade Elevations	Theoretical Grade Elevations Adjusted For Dead Load Deflection
Bk. of S. Abut.	502+93.43	3.46	775.04	775.04
Ex. ℄ Brg. S. Abut.	502+97.18	3.46	775.07	775.07
A	503+07.18	3.46	775.15	775.16
B	503+17.18	3.46	775.22	775.24
C	503+27.18	3.46	775.28	775.30
D	503+37.18	3.46	775.34	775.35
℄ Brg. Pier #1	503+49.68	3.46	775.40	775.40
E	503+59.68	3.46	775.45	775.45
F	503+69.68	3.46	775.48	775.50
G	503+79.68	3.46	775.51	775.54
H	503+89.68	3.46	775.54	775.57
I	503+99.68	3.46	775.56	775.57
J	504+09.68	3.46	775.57	775.57
℄ Brg. Pier #2	504+20.34	3.46	775.57	775.57
K	504+30.34	3.46	775.57	775.58
L	504+40.34	3.46	775.56	775.58
M	504+50.34	3.46	775.55	775.58
N	504+60.34	3.46	775.53	775.56
O	504+70.34	3.46	775.50	775.52
P	504+80.34	3.46	775.47	775.48
℄ Brg. Pier #3	504+91.01	3.46	775.42	775.42
Q	505+01.01	3.46	775.38	775.38
R	505+11.01	3.46	775.33	775.33
S	505+21.01	3.46	775.27	775.28
T	505+31.01	3.46	775.20	775.21
Ex. ℄ Brg. N. Abut.	505+41.01	3.46	775.13	775.13
Bk. of N. Abut.	505+44.76	3.46	775.10	775.10

BEAM 7

Location	Station	Offset Rt.	Theoretical Grade Elevations	Theoretical Grade Elevations Adjusted For Dead Load Deflection
Bk. of S. Abut.	503+01.11	10.38	775.00	775.00
Ex. ℄ Brg. S. Abut.	503+04.86	10.38	775.02	775.02
A	503+14.86	10.38	775.10	775.11
B	503+24.86	10.38	775.16	775.18
C	503+34.86	10.38	775.22	775.23
D	503+44.86	10.38	775.27	775.28
℄ Brg. Pier #1	503+57.36	10.38	775.33	775.33
E	503+67.36	10.38	775.37	775.37
F	503+77.36	10.38	775.40	775.42
G	503+87.36	10.38	775.42	775.45
H	503+97.36	10.38	775.44	775.47
I	504+07.36	10.38	775.46	775.48
J	504+17.36	10.38	775.46	775.47
℄ Brg. Pier #2	504+28.03	10.38	775.46	775.46
K	504+38.03	10.38	775.46	775.46
L	504+48.03	10.38	775.44	775.46
M	504+58.03	10.38	775.42	775.45
N	504+68.03	10.38	775.40	775.43
O	504+78.03	10.38	775.37	775.39
P	504+88.03	10.38	775.33	775.34
℄ Brg. Pier #3	504+98.69	10.38	775.28	775.28
Q	505+08.69	10.38	775.23	775.23
R	505+18.69	10.38	775.17	775.18
S	505+28.69	10.38	775.11	775.12
T	505+38.69	10.38	775.04	775.05
Ex. ℄ Brg. N. Abut.	505+48.69	10.38	774.96	774.96
Bk. of N. Abut.	505+52.44	10.38	774.93	774.93

WILLETT HOFMANN & ASSOCIATES INC
ENGINEERING ARCHITECTURE LAND SURVEYING
809 EAST 2ND STREET, DIXON, IL 61021-0367
T: 815-284-3381 DESIGN FIRM: #184-000918

DESIGNED - PV	REVISED -		
CHECKED - PLP	REVISED -		
DRAWN - RDA	REVISED -		
CHECKED - PLP	REVISED -		

WINNEBAGO COUNTY
F.A.P. 0412 (ALPINE RD) OVER FOREST HILLS RD
STATION 504+16.50

TOP OF SLAB ELEVATIONS
STRUCTURE NO. 101-3068

STRUCTURAL SHEET NO. 12 OF 63 SHEETS

F.A.P. RTE.	SECTION	COUNTY	TOTAL SHEETS	SHEET NO.
412	16-00620-00-BR	WINNEBAGO	109	35
	WHA# 1017D17	CONTRACT NO. 85704		
	ILLINOIS	FED. AID PROJECT 7K29(857)		

SATGE CONSTRUCTION LINE, E.

Location	Station	Offset Rt.	Theoretical Grade Elevations	Theoretical Grade Elevations Adjusted For Dead Load Deflection
Bk. of S. Abut.	503+04.58	13.50	774.97	774.97
Ex. ℄ Brg. S. Abut.	503+08.33	13.50	775.00	775.00
A	503+18.33	13.50	775.07	775.08
B	503+28.33	13.50	775.13	775.15
C	503+38.33	13.50	775.19	775.20
D	503+48.33	13.50	775.24	775.25
℄ Brg. Pier #1	503+60.83	13.50	775.29	775.29
E	503+70.83	13.50	775.33	775.34
F	503+80.83	13.50	775.36	775.38
G	503+90.83	13.50	775.38	775.41
H	504+00.83	13.50	775.40	775.43
I	504+10.83	13.50	775.41	775.43
J	504+20.83	13.50	775.42	775.42
℄ Brg. Pier #2	504+31.49	13.50	775.41	775.41
K	504+41.49	13.50	775.40	775.41
L	504+51.49	13.50	775.39	775.41
M	504+61.49	13.50	775.37	775.40
N	504+71.49	13.50	775.34	775.37
O	504+81.49	13.50	775.31	775.33
P	504+91.49	13.50	775.27	775.28
℄ Brg. Pier #3	505+02.16	13.50	775.22	775.22
Q	505+12.16	13.50	775.16	775.16
R	505+22.16	13.50	775.10	775.11
S	505+32.16	13.50	775.04	775.05
T	505+42.16	13.50	774.96	774.97
Ex. ℄ Brg. N. Abut.	505+52.16	13.50	774.88	774.88
Bk. of N. Abut.	505+55.91	13.50	774.84	774.84

BEAM 8

Location	Station	Offset Rt.	Theoretical Grade Elevations	Theoretical Grade Elevations Adjusted For Dead Load Deflection
Bk. of S. Abut.	503+08.79	17.29	774.94	774.94
Ex. ℄ Brg. S. Abut.	503+12.54	17.29	774.97	774.97
A	503+22.54	17.29	775.04	775.05
B	503+32.54	17.29	775.10	775.11
C	503+42.54	17.29	775.15	775.17
D	503+52.54	17.29	775.20	775.21
℄ Brg. Pier #1	503+65.04	17.29	775.25	775.25
E	503+75.04	17.29	775.28	775.29
F	503+85.04	17.29	775.31	775.33
G	503+95.04	17.29	775.33	775.36
H	504+05.04	17.29	775.35	775.37
I	504+15.04	17.29	775.35	775.37
J	504+25.04	17.29	775.36	775.36
℄ Brg. Pier #2	504+35.70	17.29	775.35	775.35
K	504+45.70	17.29	775.34	775.35
L	504+55.70	17.29	775.32	775.34
M	504+65.70	17.29	775.30	775.33
N	504+75.70	17.29	775.27	775.30
O	504+85.70	17.29	775.23	775.25
P	504+95.70	17.29	775.19	775.20
℄ Brg. Pier #3	505+06.37	17.29	775.13	775.13
Q	505+16.37	17.29	775.08	775.08
R	505+26.37	17.29	775.02	775.02
S	505+36.37	17.29	774.95	774.96
T	505+46.37	17.29	774.87	774.88
Ex. ℄ Brg. N. Abut.	505+56.37	17.29	774.78	774.78
Bk. of N. Abut.	505+60.12	17.29	774.74	774.74

BEAM 9

Location	Station	Offset Rt.	Theoretical Grade Elevations	Theoretical Grade Elevations Adjusted For Dead Load Deflection
Bk. of S. Abut.	503+16.47	24.21	774.89	774.89
Ex. ℄ Brg. S. Abut.	503+20.22	24.21	774.91	774.91
A	503+30.22	24.21	774.98	774.99
B	503+40.22	24.21	775.03	775.05
C	503+50.22	24.21	775.08	775.09
D	503+60.22	24.21	775.12	775.13
℄ Brg. Pier #1	503+72.72	24.21	775.17	775.17
E	503+82.72	24.21	775.20	775.20
F	503+92.72	24.21	775.22	775.24
G	504+02.72	24.21	775.24	775.26
H	504+12.72	24.21	775.24	775.27
I	504+22.72	24.21	775.25	775.27
J	504+32.72	24.21	775.24	775.25
℄ Brg. Pier #2	504+43.39	24.21	775.23	775.23
K	504+53.39	24.21	775.22	775.22
L	504+63.39	24.21	775.20	775.22
M	504+73.39	24.21	775.17	775.20
N	504+83.39	24.21	775.13	775.16
O	504+93.39	24.21	775.09	775.11
P	505+03.39	24.21	775.04	775.05
℄ Brg. Pier #3	505+14.05	24.21	774.98	774.98
Q	505+24.05	24.21	774.92	774.92
R	505+34.05	24.21	774.86	774.86
S	505+44.05	24.21	774.78	774.79
T	505+54.05	24.21	774.69	774.70
Ex. ℄ Brg. N. Abut.	505+64.05	24.21	774.59	774.59
Bk. of N. Abut.	505+67.80	24.21	774.55	774.55

BEAM 10

Location	Station	Offset Rt.	Theoretical Grade Elevations	Theoretical Grade Elevations Adjusted For Dead Load Deflection
Bk. of S. Abut.	503+24.16	31.13	774.81	774.81
Ex. ℄ Brg. S. Abut.	503+27.91	31.13	774.84	774.84
A	503+37.91	31.13	774.89	774.90
B	503+47.91	31.13	774.94	774.96
C	503+57.91	31.13	774.99	775.00
D	503+67.91	31.13	775.03	775.03
℄ Brg. Pier #1	503+80.41	31.13	775.06	775.06
E	503+90.41	31.13	775.09	775.10
F	504+00.41	31.13	775.11	775.13
G	504+10.41	31.13	775.12	775.15
H	504+20.41	31.13	775.12	775.15
I	504+30.41	31.13	775.12	775.14
J	504+40.41	31.13	775.11	775.12
℄ Brg. Pier #2	504+51.07	31.13	775.10	775.10
K	504+61.07	31.13	775.07	775.08
L	504+71.07	31.13	775.05	775.07
M	504+81.07	31.13	775.01	775.04
N	504+91.07	31.13	774.97	775.00
O	505+01.07	31.13	774.93	774.95
P	505+11.07	31.13	774.87	774.88
℄ Brg. Pier #3	505+21.74	31.13	774.81	774.81
Q	505+31.74	31.13	774.74	774.75
R	505+41.74	31.13	774.67	774.68
S	505+51.74	31.13	774.59	774.60
T	505+61.74	31.13	774.49	774.50
Ex. ℄ Brg. N. Abut.	505+71.74	31.13	774.38	774.38
Bk. of N. Abut.	505+75.49	31.13	774.33	774.33

WILLETT HOFMANN & ASSOCIATES INC
ENGINEERING ARCHITECTURE LAND SURVEYING
809 EAST 2ND STREET, DIXON, IL 61021-0367
T: 815-284-3381 DESIGN FIRM: #184-000918

DESIGNED - PV	REVISED -		
CHECKED - PLP	REVISED -		
DRAWN - RDA	REVISED -		
CHECKED - PLP	REVISED -		

WINNEBAGO COUNTY
F.A.P. 0412 (ALPINE RD) OVER FOREST HILLS RD
STATION 504+16.50

TOP OF SLAB ELEVATIONS
STRUCTURE NO. 101-3068

STRUCTURAL SHEET NO. 13 OF 63 SHEETS

F.A.P. RTE.	SECTION	COUNTY	TOTAL SHEETS	SHEET NO.
412	16-00620-00-BR	WINNEBAGO	109	36
	WHA# 1017D17	CONTRACT NO. 85704		
	ILLINOIS	FED. AID PROJECT 7K29(857)		

LEFT EDGE OF SHOULDER*

Location	Station	Offset Lt.	Theoretical Grade Elevations
A	502+24.38	33.25	774.84
B	502+34.25	33.21	774.86
C	502+44.19	33.21	774.86
D	502+54.19	33.21	774.85

*Left edge of shoulder between Sta. 502+24.38 & Sta. 502+38.12 shall have constant offset of 33.21' with respect to ℄ bridge. For striping details, see sheets 21-23 of 109.

LEFT EDGE OF TRAFFIC LANE**

Location	Station	Offset Lt.	Theoretical Grade Elevations
A	502+31.17	27.01	774.76
B	502+41.09	27.00	774.79
C	502+51.09	27.00	774.81
D	502+61.09	27.00	774.82

**Left edge of traffic lane between Sta. 502+30.62 & Sta. 502+38.12 shall have constant offset of 27.00' with respect to ℄ bridge. For striping details, see sheets 21-23 of 109.

STAGE CONSTRUCTION LINE, W.

Location	Station	Offset Lt.	Theoretical Grade Elevations
A	502+46.08	13.50	774.69
B	502+56.08	13.50	774.76
C	502+66.08	13.50	774.82
D	502+76.08	13.50	774.87

CENTERLINE OF ROADWAY & P.G.L.

Location	Station	Offset	Theoretical Grade Elevations
A	502+61.08	0.00	774.77
B	502+71.08	0.00	774.89
C	502+81.08	0.00	774.99
D	502+91.08	0.00	775.08

STAGE CONSTRUCTION LINE, E.

Location	Station	Offset Rt.	Theoretical Grade Elevations
A	502+76.07	13.50	774.73
B	502+86.07	13.50	774.82
C	502+96.07	13.50	774.91
D	503+06.07	13.50	774.98

RIGHT EDGE OF TRAFFIC LANE

Location	Station	Offset Rt.	Theoretical Grade Elevations
A	502+91.06	27.00	774.65
B	503+01.06	27.00	774.74
C	503+11.06	27.00	774.81
D	503+21.06	27.00	774.88

RIGHT EDGE OF SHOULDER

Location	Station	Offset Rt.	Theoretical Grade Elevations
A	502+97.96	33.21	774.58
B	503+07.96	33.21	774.66
C	503+17.96	33.21	774.73
D	503+27.96	33.21	774.79

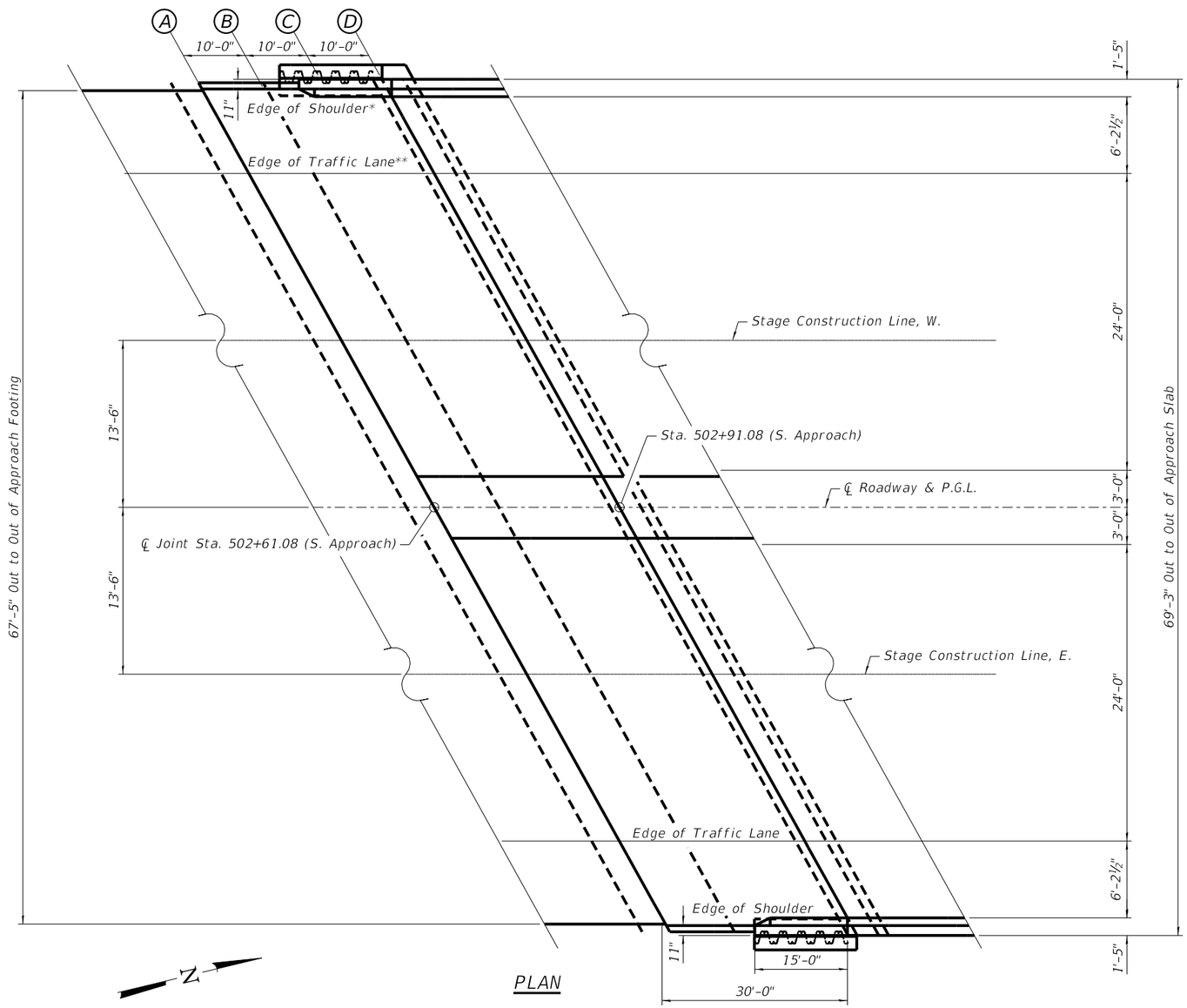

PLAN

WILLETT HOFMANN & ASSOCIATES INC ENGINEERING ARCHITECTURE LAND SURVEYING 809 EAST 2ND STREET, DIXON, IL 61021-0367 T: 815-284-3381 DESIGN FIRM: #184-000918	DESIGNED - PV CHECKED - PLP DRAWN - RDA CHECKED - PLP	REVISED - REVISED - REVISED - REVISED -	WINNEBAGO COUNTY F.A.P. 0412 (ALPINE RD) OVER FOREST HILLS RD STATION 504+16.50

TOP OF SOUTH APPROACH SLAB ELEVATIONS
STRUCTURE NO. 101-3068
STRUCTURAL SHEET NO. 14 OF 63 SHEETS

F.A.P. RTE.	SECTION	COUNTY	TOTAL SHEETS	SHEET NO.
412	16-00620-00-BR	WINNEBAGO	109	37
WHA* 1017D17		CONTRACT NO. 85704		
ILLINOIS	FED. AID PROJECT 7K29(857)			

LEFT EDGE OF SHOULDER

Location	Station	Offset Lt.	Theoretical Grade Elevations
A	505+02.54	33.21	774.87
B	505+12.54	33.21	774.82
C	505+22.54	33.21	774.76
D	505+32.54	33.21	774.69

LEFT EDGE OF TRAFFIC LANE

Location	Station	Offset Lt.	Theoretical Grade Elevations
A	505+09.44	27.00	774.97
B	505+19.44	27.00	774.91
C	505+29.44	27.00	774.84
D	505+39.44	27.00	774.77

STAGE CONSTRUCTION LINE, W.

Location	Station	Offset Lt.	Theoretical Grade Elevations
A	505+24.43	13.50	775.09
B	505+34.43	13.50	775.02
C	505+44.43	13.50	774.95
D	505+54.43	13.50	774.86

CENTERLINE OF ROADWAY & P.G.L.

Location	Station	Offset	Theoretical Grade Elevations
A	505+39.42	0.00	775.19
B	505+49.42	0.00	775.11
C	505+59.42	0.00	775.02
D	505+69.42	0.00	774.91

STAGE CONSTRUCTION LINE, E.

Location	Station	Offset Rt.	Theoretical Grade Elevations
A	505+54.42	13.50	774.86
B	505+64.42	13.50	774.76
C	505+74.42	13.50	774.64
D	505+84.42	13.50	774.51

RIGHT EDGE OF TRAFFIC LANE

Location	Station	Offset Rt.	Theoretical Grade Elevations
A	505+69.41	27.00	774.49
B	505+79.41	27.00	774.37
C	505+89.41	27.00	774.23
D	505+99.41	27.00	774.08

RIGHT EDGE OF SHOULDER

Location	Station	Offset Rt.	Theoretical Grade Elevations
A	505+76.31	33.21	774.28
B	505+86.31	33.21	774.15
C	505+96.31	33.21	774.00
D	506+06.31	33.21	773.84

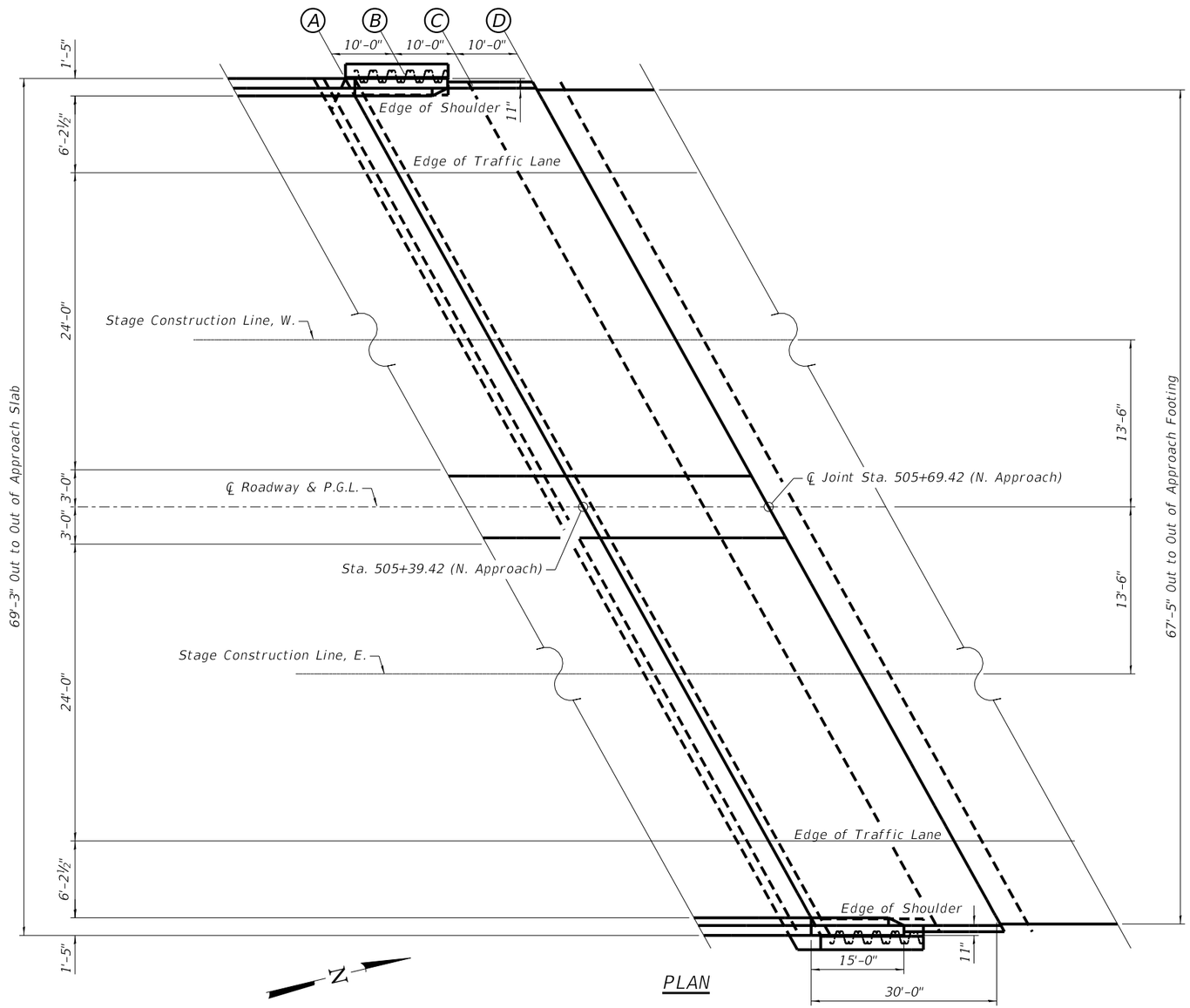

PLAN

WILLETT HOFMANN & ASSOCIATES INC ENGINEERING ARCHITECTURE LAND SURVEYING 809 EAST 2ND STREET, DIXON, IL 61021-0367 T: 815-284-3381 DESIGN FIRM: #184-000918	DESIGNED - PV CHECKED - PLP DRAWN - RDA CHECKED - PLP	REVISED - REVISED - REVISED - REVISED -	**WINNEBAGO COUNTY** **F.A.P. 0412 (ALPINE RD) OVER FOREST HILLS RD** **STATION 504+16.50**

TOP OF NORTH APPROACH SLAB ELEVATIONS
STRUCTURE NO. 101-3068
STRUCTURAL SHEET NO. 15 OF 63 SHEETS

F.A.P. RTE.	SECTION	COUNTY	TOTAL SHEETS	SHEET NO.
412	16-00620-00-BR	WINNEBAGO	109	38
WHA* 1017D17		CONTRACT NO. 85704		
ILLINOIS	FED. AID PROJECT 7K29(857)			

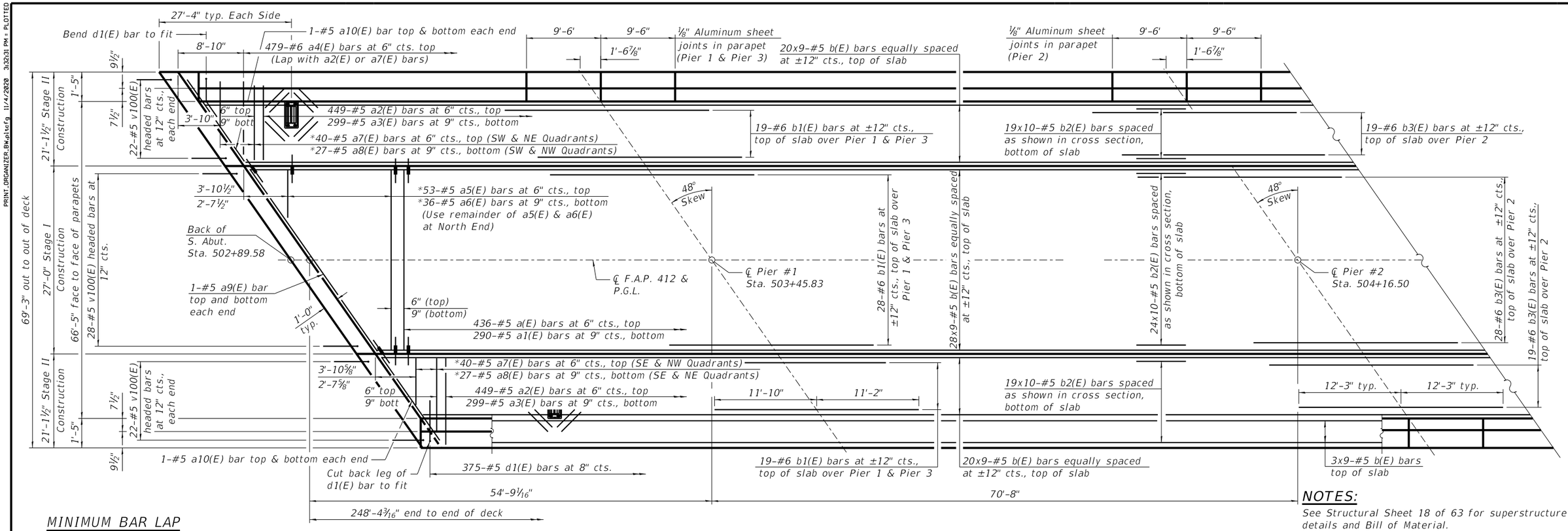

MINIMUM BAR LAP

#4 bar = 2'-8"
#5 bar = 3'-6"

*See Field Cutting Diagram on Structural Sheet 18 of 63.

PARTIAL PLAN (SPANS 1 & 2)

(Deck Reinforcement in Spans 1-4 is shown, see Structural Sheet 17 of 63 for additional Details.)

NOTES:

See Structural Sheet 18 of 63 for superstructure details and Bill of Material.

Bars indicated thus 20x3-#5 etc. indicates 20 lines of bars with 3 lengths per line.

A negative slope indicates downward slope and a positive slope indicates upward slope in the pointed direction.

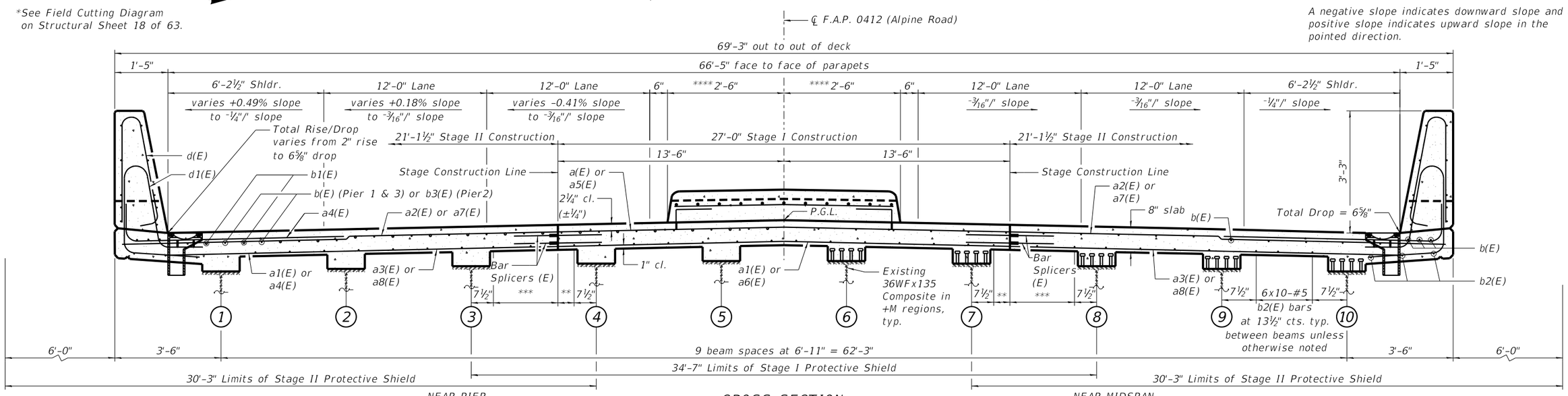

CROSS SECTION

(Looking North)

****5' wide is constructed in Stage III, see Structural Sheet 3 of 63 for Staging Details.

**3x10-#5 b2(E) bars

***4x10-#5 b2(E) bars

WILLETT HOFMANN & ASSOCIATES INC
ENGINEERING ARCHITECTURE LAND SURVEYING
809 EAST 2ND STREET, DIXON, IL 61021-0367
T: 815-284-3381 DESIGN FIRM: #184-000918

DESIGNED - PV	REVISED -		
CHECKED - PLP	REVISED -		
DRAWN - RDA	REVISED -		
CHECKED - PLP	REVISED -		

WINNEBAGO COUNTY
F.A.P. 0412 (ALPINE RD) OVER FOREST HILLS RD
STATION 504+16.50

SUPERSTRUCTURE
STRUCTURE NO. 101-3068

STRUCTURAL SHEET NO. 16 OF 63 SHEETS

F.A.P. RTE.	SECTION	COUNTY	TOTAL SHEETS	SHEET NO.
412	16-00620-00-BR	WINNEBAGO	109	39
	WHA# 1017D17	CONTRACT NO. 85704		
		ILLINOIS FED. AID PROJECT 7K29(857)		

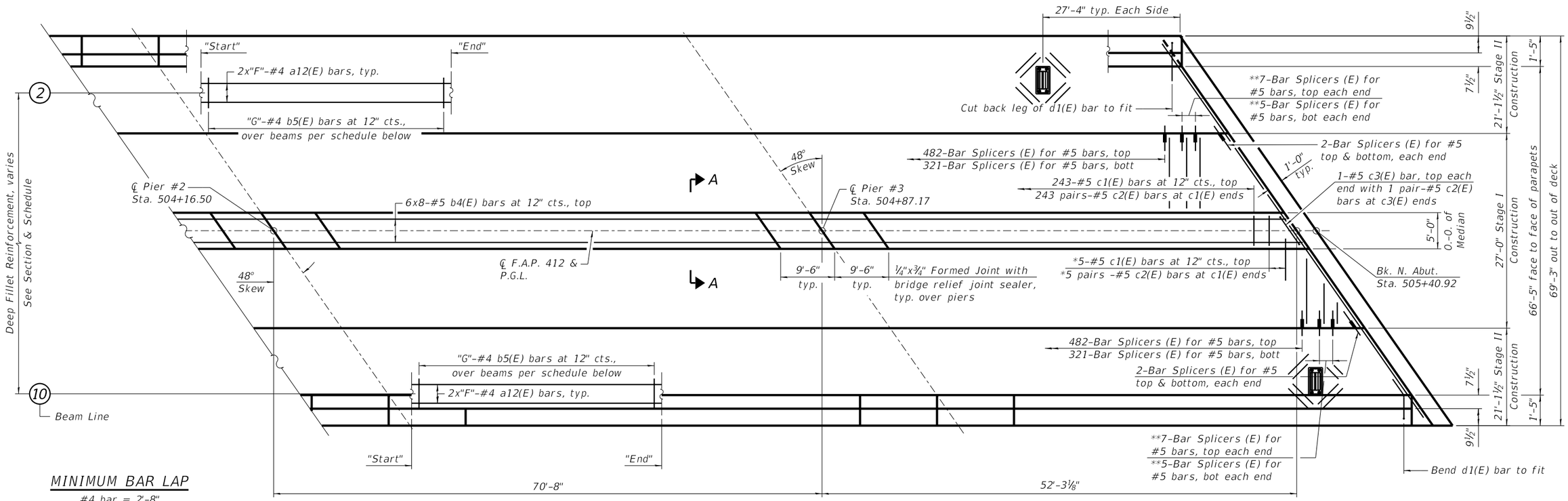

MINIMUM BAR LAP

#4 bar = 2'-8"
#5 bar = 3'-6"

PARTIAL PLAN (SPANS 3 & 4)

(Bar Splicers and Deep-Fillet/Median Reinforcement in Spans 1-4 is shown, see Structural Sheet 16 of 63 for additional details.)

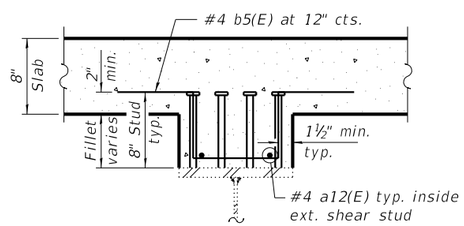

DEEP FILLET SECTION

NOTES:

See Structural Sheet 18 of 63 for superstructure details and Bill of Material.

Bars indicated thus 20 x 3-#5 etc. indicates 20 lines of bars with 3 lengths per line.

* Order c1(E) bars full length, cut to fit skew and use remainder of bars in opposite end with c2(E) pairs.

** Order bar splicers (E) full length, cut to fit skew.

*** The cost of expansion anchors/inserts is included in the cost of Reinforcement Bars, Epoxy Coated.

**** Full width along joint - backer rod not required.

Beam Line	Start	End	Lengths per Line "F"	No. of b5(E) bars "G"
2	30 ft North of ℄ Pier #1	50 ft North of ℄ Pier #2	4	92
3	10 ft North of ℄ Pier #1	50 ft North of ℄ Pier #2	5	112
4	℄ S. Abut.	60 ft North of ℄ Pier #2	9	185
5	℄ S. Abut.	10 ft North of ℄ Pier #3	9	205
6	℄ S. Abut.	10 ft North of ℄ Pier #3	9	205
7	℄ S. Abut.	50 ft North of ℄ Pier #2	8	175
8	℄ S. Abut.	40 ft North of ℄ Pier #2	8	165
9	℄ S. Abut.	50 ft North of ℄ Pier #1	5	104
10	℄ S. Abut.	30 ft North of ℄ Pier #1	4	84

DEEP FILLET BAR SCHEDULE

See Structural Sheet 18 of 63 for Bill of Material.

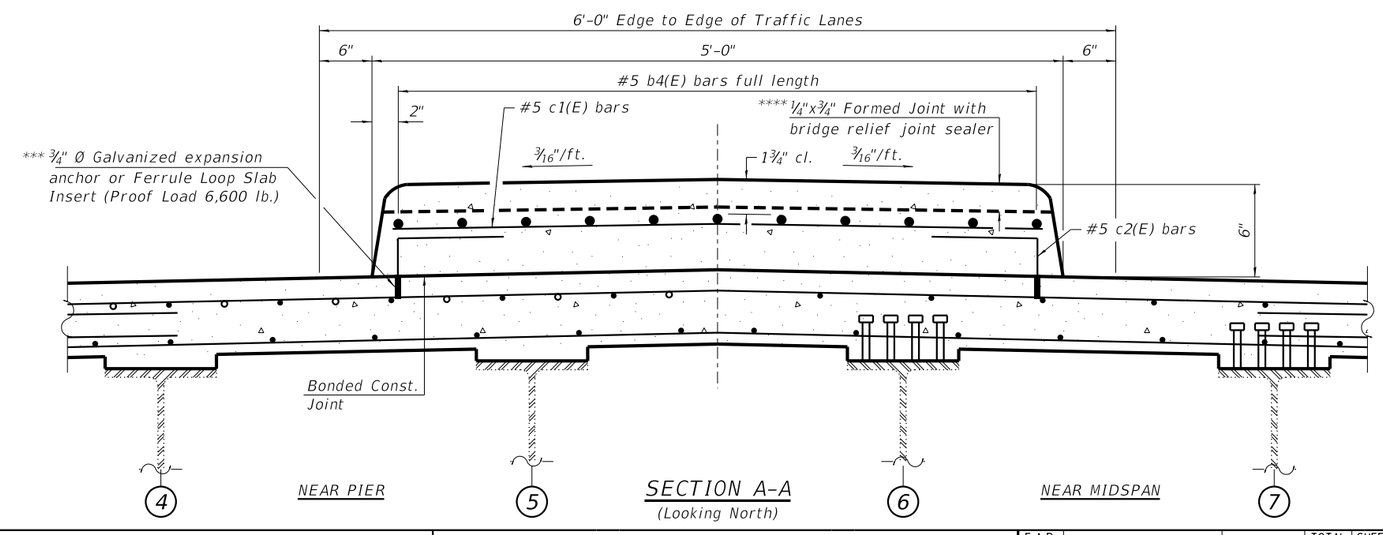

SECTION A-A

(Looking North)

WILLETT HOFMANN & ASSOCIATES INC
ENGINEERING ARCHITECTURE LAND SURVEYING
809 EAST 2ND STREET, DIXON, IL 61021-0367
T: 815-284-3381 DESIGN FIRM: #184-000918

DESIGNED - PV	REVISED -		
CHECKED - PLP	REVISED -		
DRAWN - RDA	REVISED -		
CHECKED - PLP	REVISED -		

WINNEBAGO COUNTY
F.A.P. 0412 (ALPINE RD) OVER FOREST HILLS RD
STATION 504+16.50

SUPERSTRUCTURE
STRUCTURE NO. 101-3068

STRUCTURAL SHEET NO. 17 OF 63 SHEETS

F.A.P. RTE.	SECTION	COUNTY	TOTAL SHEETS	SHEET NO.
412	16-00620-00-BR	WINNEBAGO	109	40
WHA# 1017D17		CONTRACT NO. 85704		
ILLINOIS	FED. AID PROJECT 7K29(857)			

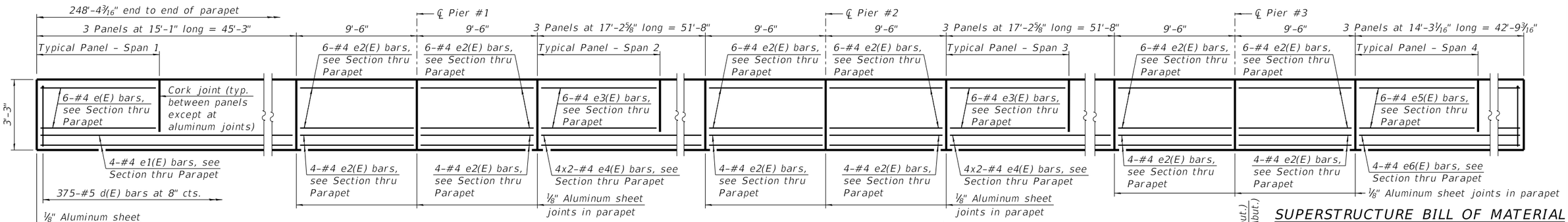

INSIDE ELEVATION OF PARAPET

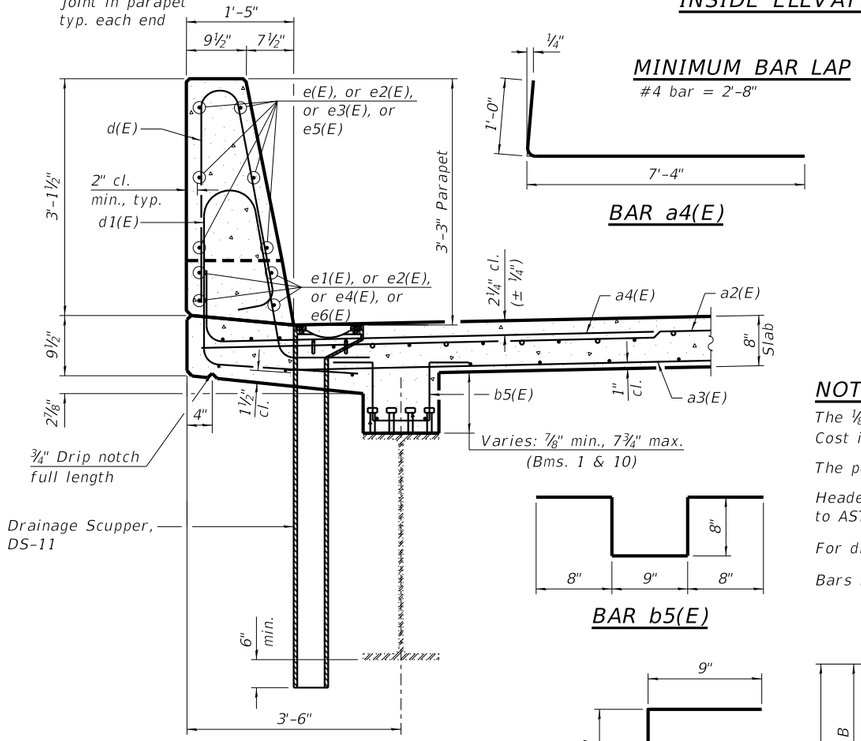

SECTION THRU PARAPET

(West parapet shown, East parapet similar)

MINIMUM BAR LAP

#4 bar = 2'-8"

BAR a4(E)

BAR b5(E)

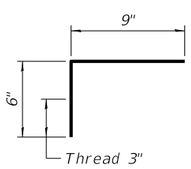

BAR c2(E)

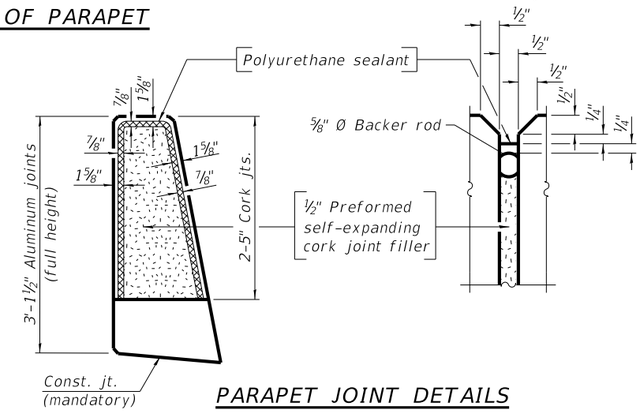

PARAPET JOINT DETAILS

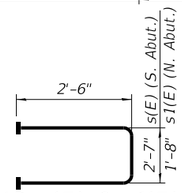

BAR s(E) & s1(E)

(Headed)

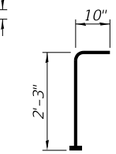

BAR v100(E)

(Headed)

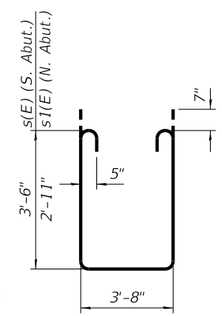

BAR s2(E) & s3(E)

NOTES:

The 1/8" aluminum sheet shall be ASTM B 209 alloy 3003-H14 and coated to minimize reaction with wet concrete. Cost included with Concrete Superstructure.

The polyurethane sealant shall be according to Article 1050.04 of the Std. Spec. and the color shall be gray.

Headed bars shall conform to ASTM A970 with threaded attachment; Class HA; and reinforcement bars conforming to ASTM A706. Cost included with Reinforcement Bars, Epoxy Coated.

For drainage scupper details and Bill of Material, see Structural Sheet 37 of 63.

Bars indicated thus 1 x 2-#4 etc. indicates 1 line of bars with 2 lengths per line.

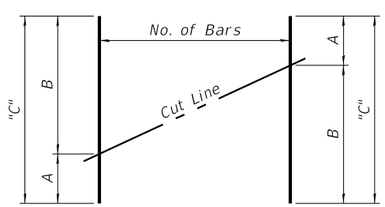

FIELD CUTTING DIAGRAM

See table for dimensions. Make all cuts normal to bar axis.

Order bars in the table below to full length "C". Cut as shown and use remainder of bars as noted on Partial Plan sheets.

BAR CUTTING TABLE

Bar	No. of Sets Req'd.	No. of Bars per Set	A	B	"C"
a5(E)	1	53	3'-0"	26'-6"	29'-6"
a6(E)	1	36	2'-11"	26'-6"	29'-5"
a7(E)	2	40	3'-0"	20'-7"	23'-7"
a8(E)	1	27	2'-11"	20'-5"	23'-4"

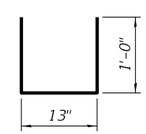

BAR u(E)

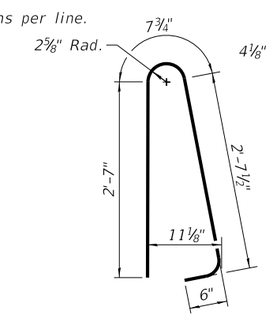

BAR d(E)

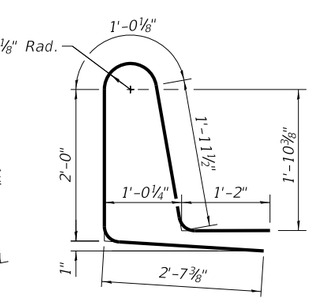

BAR d1(E)

SUPERSTRUCTURE BILL OF MATERIAL

Bar	No.	Size	Length	Shape
a(E)	436	#5	26'-9"	
a1(E)	290	#5	26'-9"	
a2(E)	898	#5	20'-10"	
a3(E)	598	#5	20'-10"	
a4(E)	958	#6	8'-4"	
a5(E)	53	#5	29'-6"	
a6(E)	36	#5	29'-5"	
a7(E)	80	#5	23'-7"	
a8(E)	27	#5	23'-4"	
a9(E)	4	#5	40'-1"	
a10(E)	8	#5	31'-2"	
a11(E)	32	#5	1'-6"	
a12(E)	122	#4	25'-0"	
b(E)	666	#5	30'-9"	
b1(E)	132	#5	23'-0"	
b2(E)	620	#5	28'-0"	
b3(E)	66	#5	24'-6"	
b4(E)	48	#5	33'-9"	
b5(E)	1,327	#4	3'-5"	
c1(E)	248	#5	4'-6"	
c2(E)	500	#5	1'-3"	
c3(E)	2	#5	6'-11"	
d(E)	750	#5	6'-5"	
d1(E)	750	#5	8'-9"	
e(E)	18	#4	14'-9"	
e1(E)	8	#4	44'-11"	
e2(E)	120	#4	9'-2"	
e3(E)	72	#4	16'-10"	
e4(E)	32	#4	27'-0"	
e5(E)	36	#4	13'-11"	
e6(E)	8	#4	42'-5"	
m(E)	14	#6	40'-1"	
m1(E)	28	#6	31'-2"	
m2(E)	54	#6	9'-9"	
m3(E)	12	#6	4'-8"	
m4(E)	36	#6	9'-9"	
m5(E)	8	#6	4'-8"	
m6(E)	4	#4	40'-1"	
m7(E)	8	#4	31'-2"	
s(E)	71	#5	7'-7"	
s1(E)	71	#5	6'-8"	
s2(E)	71	#5	11'-10"	
s3(E)	71	#5	10'-8"	
u(E)	142	#4	3'-1"	
v100(E)	144	#5	3'-1"	

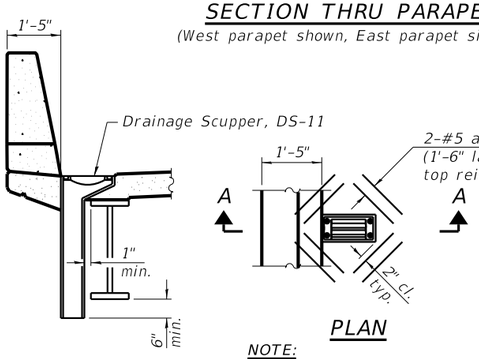

SECTION A-A

PLAN

NOTE:
Cut longitudinal reinforcement to clear drainage scuppers.

SUPERSTRUCTURE BILL OF MATERIAL

Concrete Removal	Cu. Yd.	483.9
Bridge Rail Removal	Foot	493
Protective Shield	Sq. Yd.	1,493
Concrete Superstructure	Cu. Yd.	663.6
Bridge Deck Grooving	Sq. Yd.	1,640
Protective Coat	Sq. Yd.	2,078
Reinforcement Bars, Epoxy Coated	Lbs.	145,830
Bar Splicers	Each	1,694

WILLETT HOFMANN & ASSOCIATES INC
ENGINEERING ARCHITECTURE LAND SURVEYING
809 EAST 2ND STREET, DIXON, IL 61021-0367
T: 815-284-3381 DESIGN FIRM: #184-000918

DESIGNED - PV	REVISED -		
CHECKED - PLP	REVISED -		
DRAWN - RDA	REVISED -		
CHECKED - PLP	REVISED -		

WINNEBAGO COUNTY
F.A.P. 0412 (ALPINE RD) OVER FOREST HILLS RD
STATION 504+16.50

SUPERSTRUCTURE DETAILS
STRUCTURE NO. 101-3068

STRUCTURAL SHEET NO. 18 OF 63 SHEETS

F.A.P. RTE.	SECTION	COUNTY	TOTAL SHEETS	SHEET NO.
412	16-00620-00-BR	WINNEBAGO	109	41
	WHA* 1017D17	CONTRACT NO. 85704		
		ILLINOIS FED. AID PROJECT 7K29(857)		

PRINT_ORGANIZER_BW.pltcfg 11/4/2020 2:30:11 PM : PLOTTED
FILE = S:\PROJECTS\2017\1017D17_WNCH\DESIGN\CAD_SHEETS\1017D17_Superstructure Details.dgn

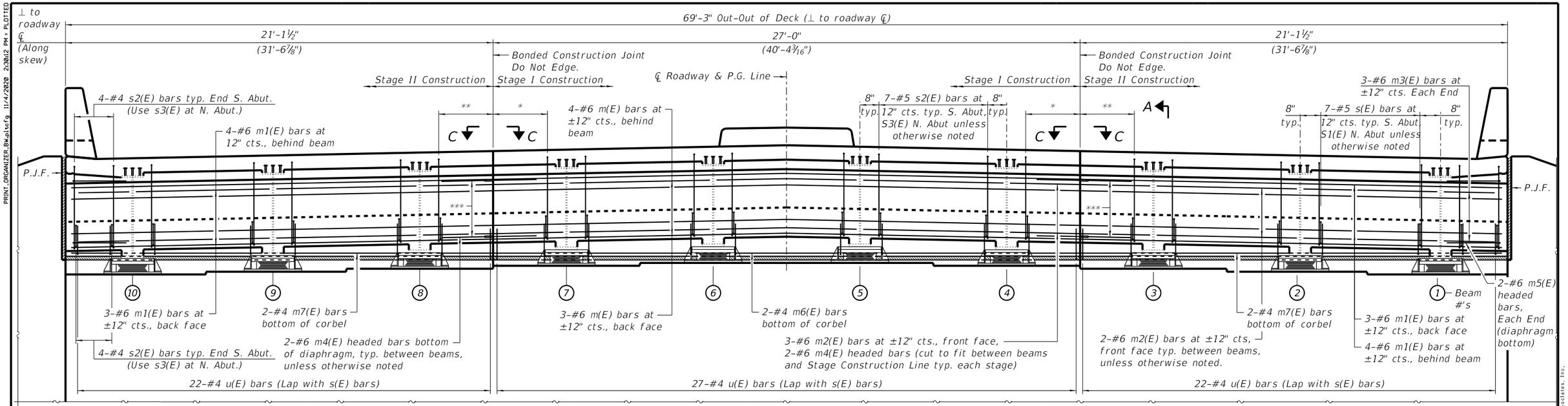

DIAPHRAGM ELEVATION AT SOUTH & NORTH ABUTMENT

(Looking South)

* Stage I, S. Abut. 3-#5 s(E) & 3-#5 s2(E)
Stage I, N. Abut. 3-#5 s1(E) & 3-#5 s3(E)

** Stage II, S. Abut. 4-#5 s(E) & 4-#5 s2(E)
Stage II, N. Abut. 4-#5 s1(E) & 4-#5 s3(E)

*** Typical at Stage Construction Line
7-#6 bar splicers for m(E) & m1(E) lap
2-#4 bar splicers for m6(E) & m7(E) lap
3-#6 bar splicers for m2(E) bars
2-#6 bar splicers for m4(E) headed bars

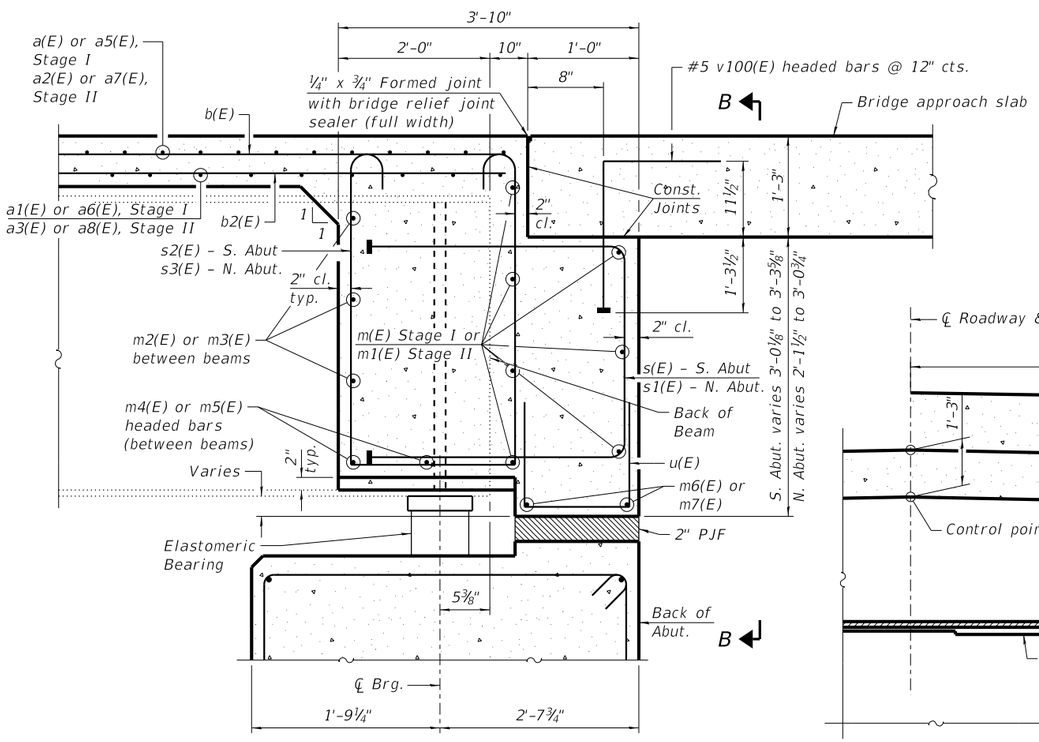

SECTION A-A

(at Rt. ∠'s)

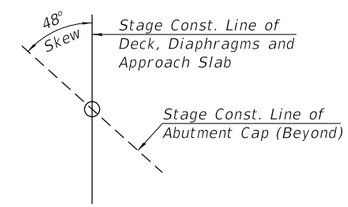

SECTION C-C

See Detail C on Structural Sheets 28 & 30 of 63

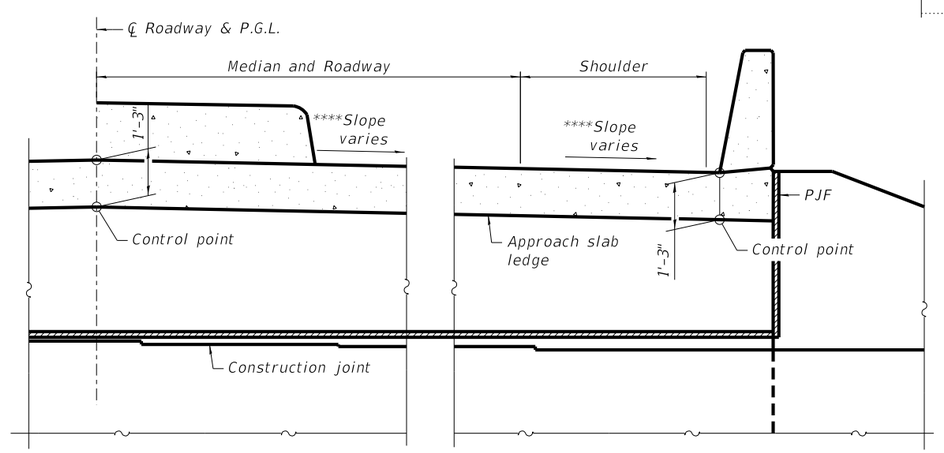

VIEW B-B

****See Structural Sheet 20 of 63 for cross-slopes at Approach Slabs)

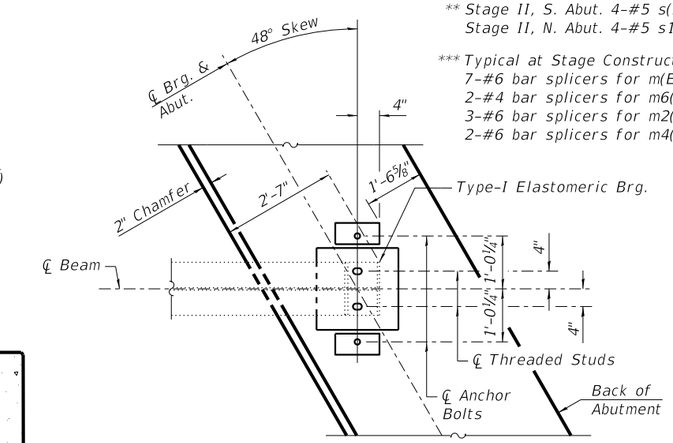

PARTIAL PLAN AT ABUTMENT

(Showing bottom flange of beam)

NOTES:

Reinforcement bars in diaphragm are billed with superstructure on Structural Sheet 18 of 63.

Concrete in diaphragm is included with Concrete Superstructure on Structural Sheet 18 of 63.

s(E), s1(E), s2(E), s3(E), u(E), and v100(E) bars are placed parallel to beams and spaced at right angles to beams. For details of bars, see Structural Sheet 18 of 63.

The approach slab seat shall have a constant slope determined from the control points shown.

For bearing details, see Structural Sheet 26 of 63.

WILLETT HOFMANN & ASSOCIATES INC
ENGINEERING ARCHITECTURE LAND SURVEYING
809 EAST 2ND STREET, DIXON, IL 61021-0367
T: 815-284-3381 DESIGN FIRM: #184-000918

DESIGNED	- PV	REVISED	-
CHECKED	- PLP	REVISED	-
DRAWN	- RDA	REVISED	-
CHECKED	- PLP	REVISED	-

WINNEBAGO COUNTY
F.A.P. 0412 (ALPINE RD) OVER FOREST HILLS RD
STATION 504+16.50

DIAPHRAGM DETAILS
STRUCTURE NO. 101-3068
STRUCTURAL SHEET NO. 19 OF 63 SHEETS

F.A.P. RTE.	SECTION	COUNTY	TOTAL SHEETS	SHEET NO.
412	16-00620-00-BR	WINNEBAGO	109	42
	WHA# 1017D17	CONTRACT NO. 85704		
	ILLINOIS FED. AID PROJECT 7K29(857)			

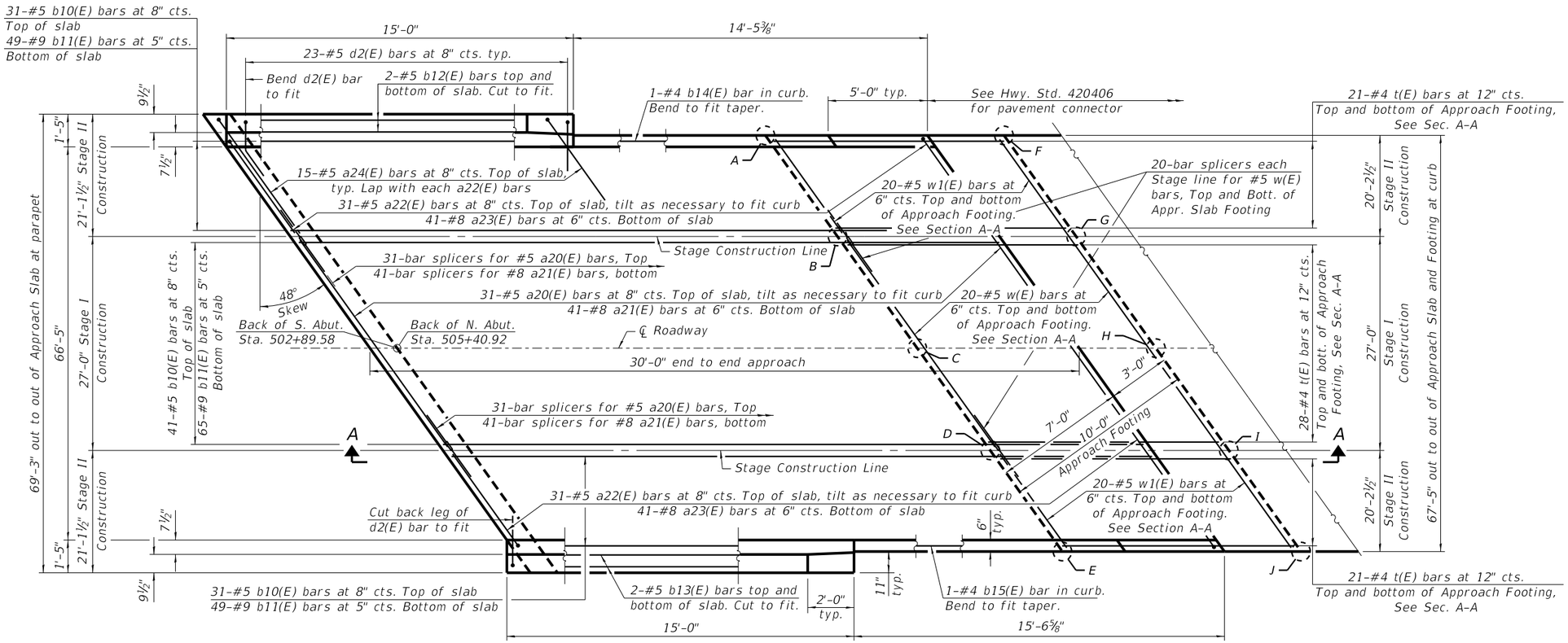

PLAN

(Median not shown for clarity)

TOP AND BOTTOM ELEVATIONS FOR APPROACH FOOTING

	South Approach		North Approach	
Point	Top	Bottom	Top	Bottom
A	773.40	772.57	773.51	772.67
B	773.58	772.74	773.70	772.87
C	773.64	772.81	773.77	772.94
D	773.52	772.68	773.40	772.56
E	773.61	772.78	772.74	771.90
F	773.29	772.46	773.40	772.57
G	773.43	772.60	773.56	772.73
H	773.47	772.63	773.61	772.77
I	773.40	772.57	773.20	772.37
J	773.59	772.76	772.49	771.66

SOUTH APPROACH

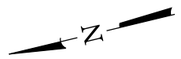

NORTH APPROACH

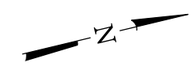

NOTES:

See Structural Sheet 21 of 63 for Section A-A.

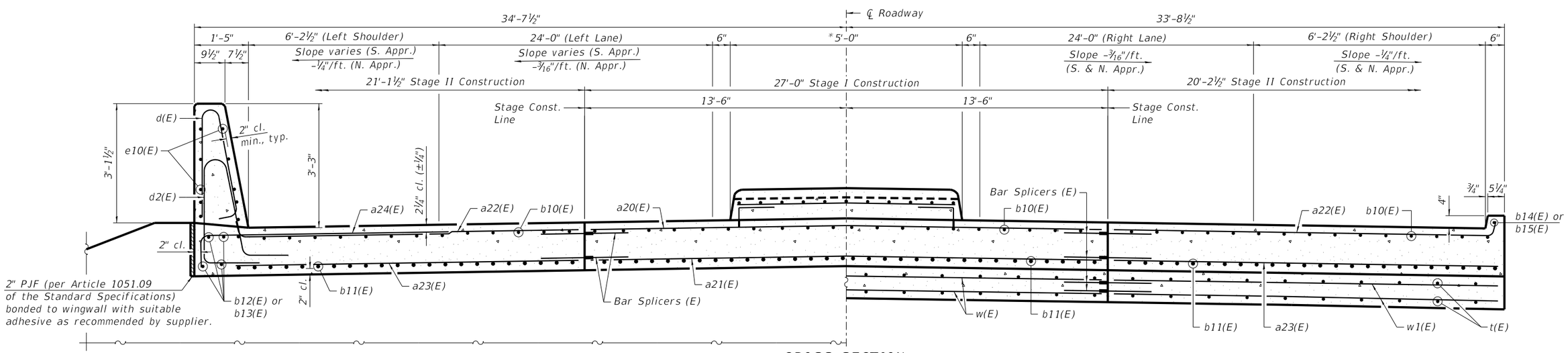

NEAR ABUTMENT

CROSS SECTION

(Looking North)

*Median constructed in Stage III

For median details at approach slab see Structural Sheet 21 of 63.

AT APPROACH FOOTING

(Sheet 1 of 2)

WILLETT HOFMANN & ASSOCIATES INC
ENGINEERING ARCHITECTURE LAND SURVEYING
809 EAST 2ND STREET, DIXON, IL 61021-0367
T: 815-284-3381 DESIGN FIRM: #184-000918

DESIGNED - PV	REVISED -		
CHECKED - PLP	REVISED -		
DRAWN - RDA/FDL	REVISED -		
CHECKED - PLP	REVISED -		

WINNEBAGO COUNTY
F.A.P. 0412 (ALPINE RD) OVER FOREST HILLS RD
STATION 504+16.50

SOUTH AND NORTH BRIDGE APPROACH SLAB DETAILS
STRUCTURE NO. 101-3068

STRUCTURAL SHEET NO. 20 OF 63 SHEETS

F.A.P. RTE.	SECTION	COUNTY	TOTAL SHEETS	SHEET NO.
412	16-00620-00-BR	WINNEBAGO	109	43
	WHA* 1017D17	CONTRACT NO. 85704		
		ILLINOIS FED. AID PROJECT 7K29(857)		

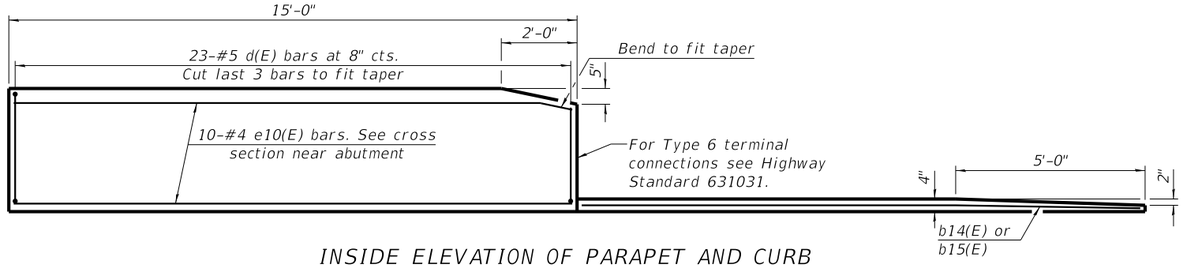

INSIDE ELEVATION OF PARAPET AND CURB

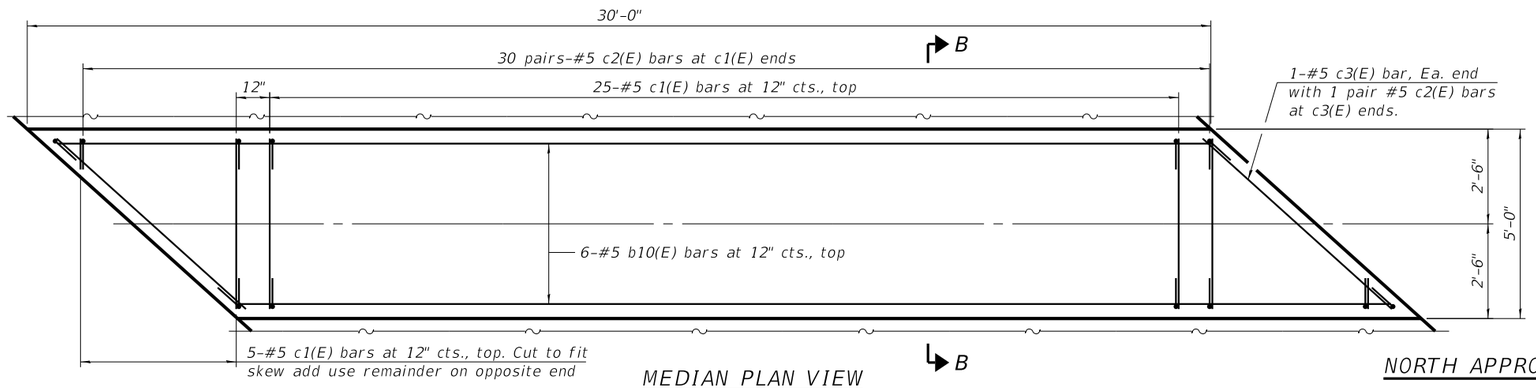

MEDIAN PLAN VIEW
(North and South Approach Slabs)

NORTH APPROACH

N

SOUTH APPROACH

N

NOTES:

Parapet and Median concrete shall be paid for as Concrete Superstructure.

Approach slab shall be paid for as Concrete Superstructure (Approach Slab).

Approach footing concrete shall be paid for as Concrete Structures.

The approach footing maximum applied service bearing pressure (Qmax) = 2.0 ksf.

Cost of excavation for approach footing included with Concrete Structures.

For Granular Backfill for Structures and drainage treatment details, see Structural Sheet 31 of 63.

***The cost of expansion anchors/inserts is included in the cost of Reinforcement Bars, Epoxy Coated.

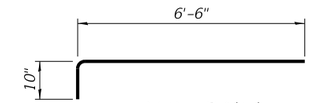

BAR a24(E)

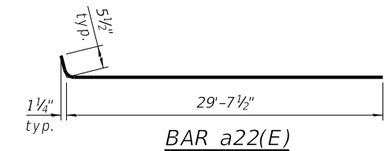

BAR a22(E)

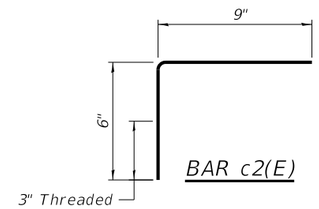

BAR c2(E)

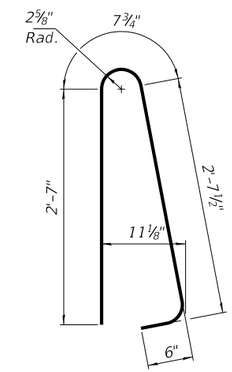

BAR d(E)

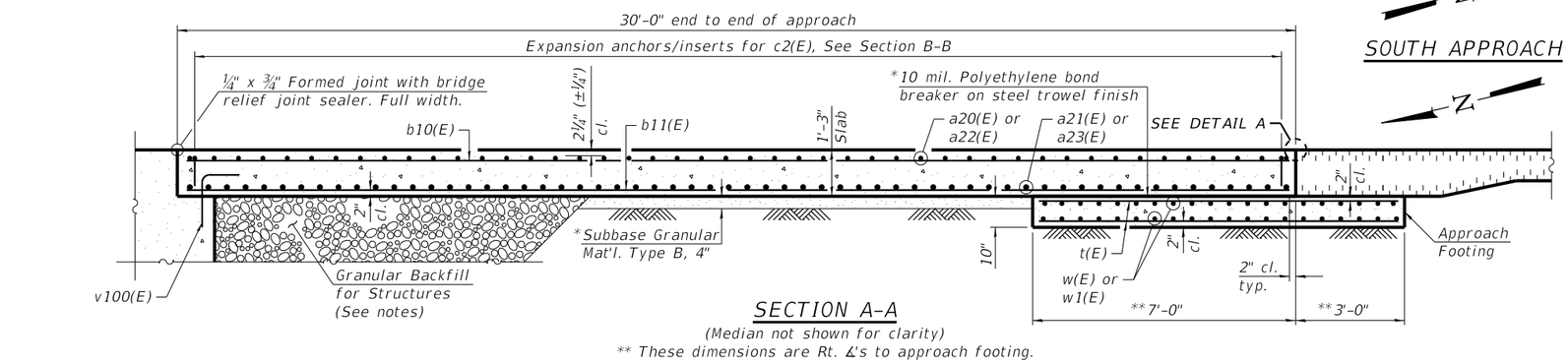

SECTION A-A
(Median not shown for clarity)
** These dimensions are Rt. ∠'s to approach footing.

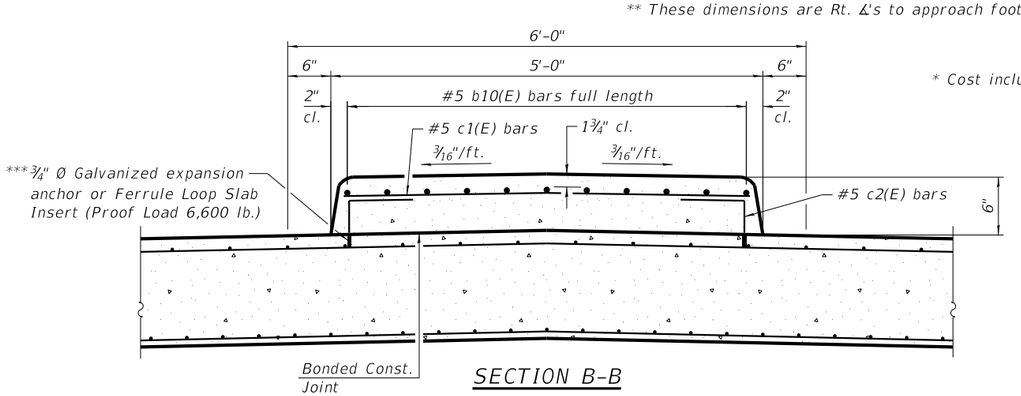

SECTION B-B

* Cost included with Concrete Superstructure (Approach Slab).

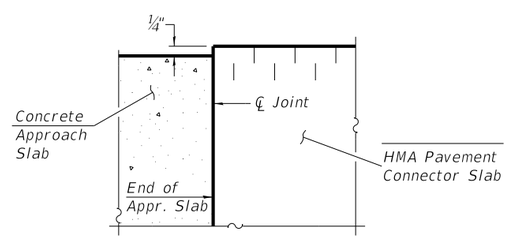

DETAIL A
(@ Rt. ∠'s)

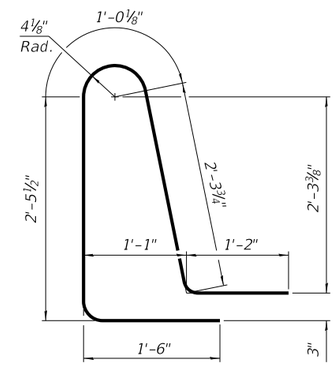

BAR d2(E)

TWO APPROACHES BILL OF MATERIAL

Bar	No.	Size	Length	Shape
a20(E)	62	#5	40'-0"	
a21(E)	82	#8	40'-0"	
a22(E)	124	#5	30'-1"	
a23(E)	164	#8	29'-8"	
a24(E)	60	#5	7'-4"	
b10(E)	206	#5	29'-8"	
b11(E)	326	#9	29'-8"	
b12(E)	8	#5	16'-2"	
b13(E)	8	#5	14'-8"	
b14(E)	2	#4	16'-1"	
b15(E)	2	#4	15'-2"	
c1(E)	60	#5	4'-6"	
c2(E)	128	#5	1'-3"	
c3(E)	4	#5	6'-11"	
d(E)	92	#5	6'-5"	
d2(E)	92	#5	8'-6"	
e10(E)	40	#4	14'-8"	
t(E)	280	#4	14'-7"	
w(E)	80	#5	40'-0"	
w1(E)	160	#5	29'-8"	
Concrete Removal			Cu. Yd.	86.2
Protective Coat			Sq. Yd.	480
Concrete Structures			Cu. Yd.	62.2
Concrete Superstructure			Cu. Yd.	13.2
Concrete Superstructure (Approach Slab)			Cu. Yd.	190.2
Bridge Deck Grooving			Sq. Yd.	396
Reinforcement Bars, Epoxy Coated			Pound	81,560
Bar Splicers			Each	448

(Sheet 2 of 2)

WILLETT HOFMANN & ASSOCIATES INC
ENGINEERING ARCHITECTURE LAND SURVEYING
809 EAST 2ND STREET, DIXON, IL 61021-0367
T: 815-284-3381 DESIGN FIRM: #184-000918

DESIGNED - PV	REVISED -		
CHECKED - PLP	REVISED -		
DRAWN - RDA/FDL	REVISED -		
CHECKED - PLP	REVISED -		

WINNEBAGO COUNTY
F.A.P. 0412 (ALPINE RD) OVER FOREST HILLS RD
STATION 504+16.50

SOUTH AND NORTH BRIDGE APPROACH SLAB DETAILS
STRUCTURE NO. 101-3068

STRUCTURAL SHEET NO. 21 OF 63 SHEETS

F.A.P. RTE.	SECTION	COUNTY	TOTAL SHEETS	SHEET NO.
412	16-00620-00-BR	WINNEBAGO	109	44
	WHA* 1017D17	CONTRACT NO. 85704		
	ILLINOIS FED. AID PROJECT 7K29(857)			

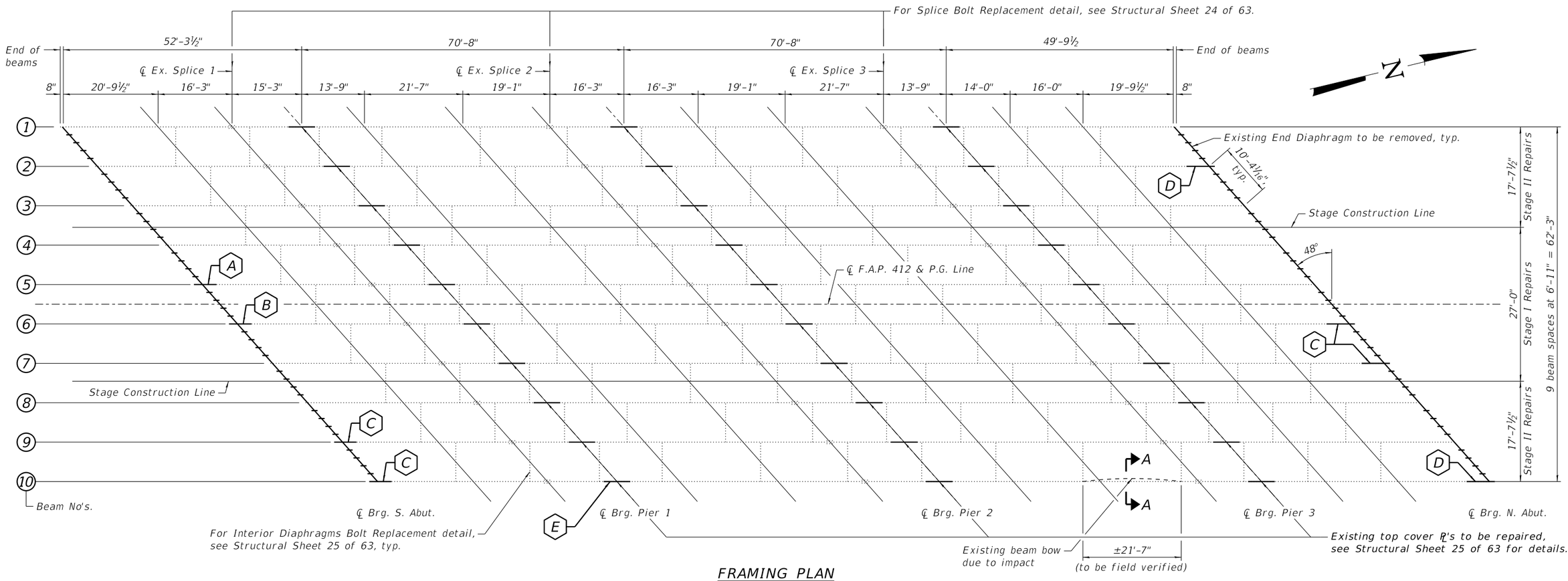

FRAMING PLAN

- (A) - Beam End Repair - Repair A
- (B) - Beam End Repair - Repair B
- (C) - Beam End Repair - Repair C
- (D) - Beam End Repair - Repair D
- (E) - Beam Bottom Flange Repair - Repair E

See Structural Sheets 23-24 of 63 for Repairs (A), (B), (C), (D) & (E)

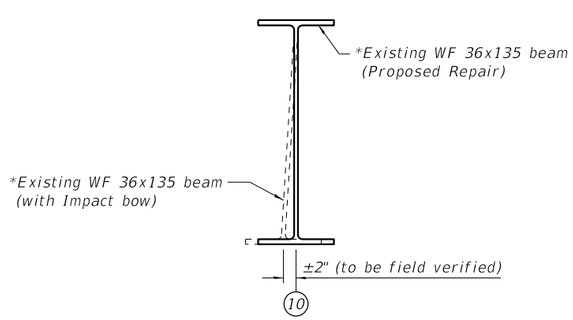

SECTION A-A

LEGEND:

= Structural Steel Removal (Existing Diaphragms and it connections to be completely removed)

NOTES:

See Structural Sheet 25 of 63, for structural steel removal billing details.

All cross frames or diaphragms shall be installed as steel is erected and secured with erection pins and bolts except as otherwise noted. Individual cross frames or diaphragms at supports may be temporarily disconnected to install bearing anchor rods.

*Contractor shall straighten the existing beam back to "Proposed Repair" Condition. (see structural sheets 53-55 of 63). Cost of repair shall be included with Structural Steel Repair, see Special Provisions

WILLETT HOFMANN & ASSOCIATES INC
ENGINEERING ARCHITECTURE LAND SURVEYING
809 EAST 2ND STREET, DIXON, IL 61021-0367
T: 815-284-3381 DESIGN FIRM: #184-000918

DESIGNED - PV	REVISED -		
CHECKED - PLP	REVISED -		
DRAWN - RDA	REVISED -		
CHECKED - PLP	REVISED -		

WINNEBAGO COUNTY
F.A.P. 0412 (ALPINE RD) OVER FOREST HILLS RD
STATION 504+16.50

STRUCTURAL STEEL
STRUCTURE NO. 101-3068
STRUCTURAL SHEET NO. 22 OF 63 SHEETS

F.A.P. RTE.	SECTION	COUNTY	TOTAL SHEETS	SHEET NO.
412	16-00620-00-BR	WINNEBAGO	109	45
	WHA* 1017D17	CONTRACT NO. 85704		
	ILLINOIS FED. AID PROJECT 7K29(857)			

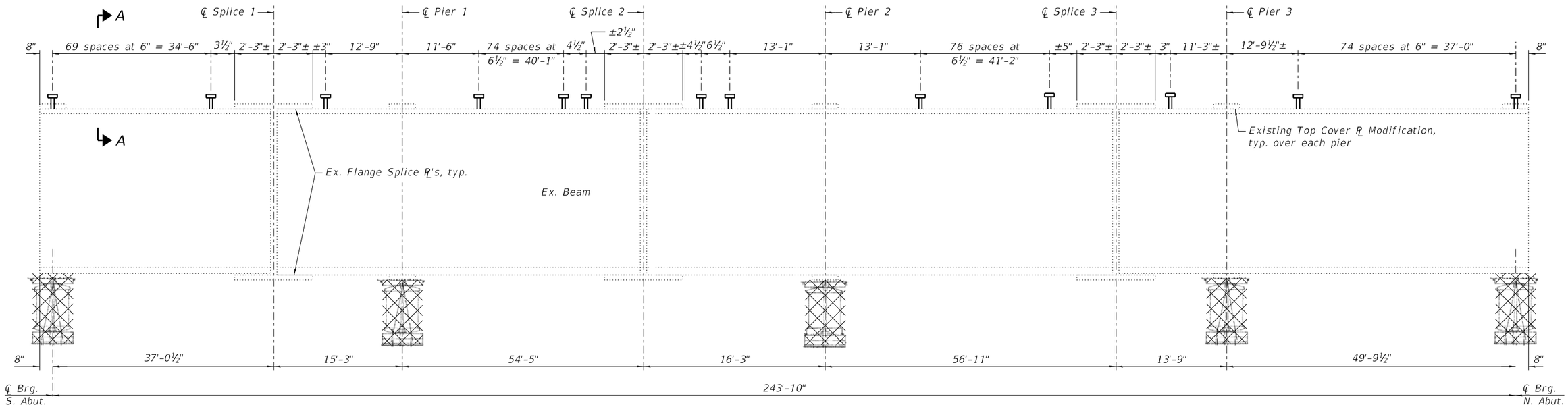

GIRDER ELEVATION

(Existing Web Splice PL's are not shown for clarity)

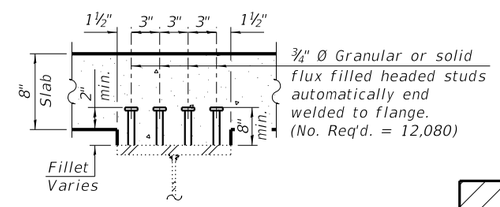

SECTION A-A

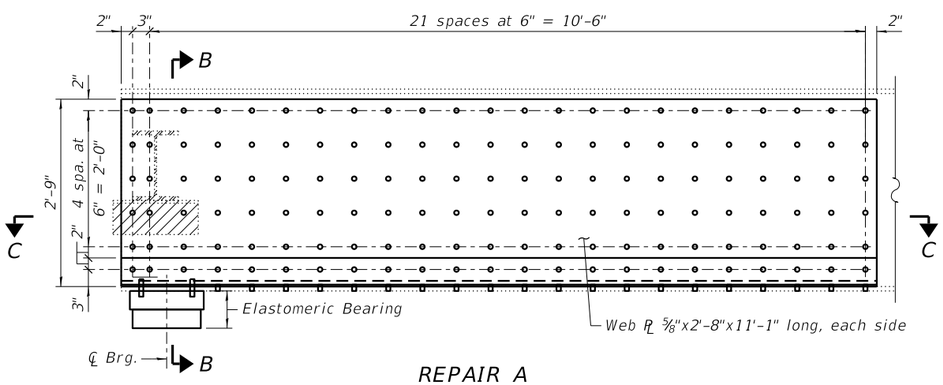

REPAIR A

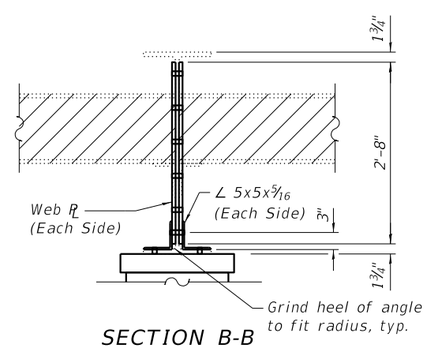

SECTION B-B

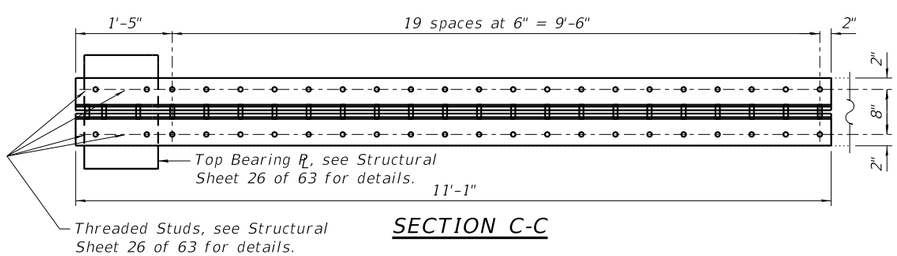

SECTION C-C

TOP OF BEAM ELEVATIONS (FOR FABRICATORS USE ONLY)								
Beam Number	℄ Brg S. Abut.	Splice #1	Pier #1	Splice #2	Pier #2	Splice #3	Pier #3	℄ Brg. N. Abut.
1	773.88	773.88	773.91	773.98	774.00	774.09	774.08	774.06
2	773.79	773.84	773.87	773.98	774.00	774.09	774.09	774.08
3	773.72	773.83	773.88	774.06	774.09	774.19	774.17	774.11
4	773.68	773.85	773.91	774.14	774.17	774.25	774.22	774.13
5	773.66	773.88	773.95	774.22	774.24	774.29	774.26	774.15
6	773.64	773.89	773.97	774.25	774.25	774.27	774.24	774.10
7	773.58	773.87	773.94	774.19	774.20	774.20	774.15	773.99
8	773.55	773.86	773.92	774.15	774.14	774.12	774.07	773.88
9	773.53	773.85	773.91	774.10	774.08	774.02	773.97	773.76
10	773.52	773.85	773.89	774.05	774.02	773.94	773.87	773.64

Note: Top of beam elevations Do Not include splice plates.

LEGEND:

= Structural Steel Removal

= Removal of Existing Bearings

BILL OF MATERIAL

Item	Unit	Total
Stud Shear Connectors	Each	12,080
Removal of Existing Bearings	Each	50

NOTES:

All structural steel shall conform to AASHTO M 270 Grade 36, unless otherwise noted.

Plan dimensions and details relative to existing plans are subject to nominal construction variations. The Contractor shall field verify existing dimensions and details affecting new construction and make necessary approved adjustments prior to construction or ordering of materials. Such variations shall not be cause for additional compensation for a change in scope of the work, however, the Contractor will be paid for the quantity actually furnished at the unit price bid for the work.

All structural steel shall be hot-dip galvanized. See Special Provisions for "Hot Dip Galvanizing for Structural Steel".

All fasteners shall be high strength bolts. For repairs A-E ¾" Ø bolts shall be used unless otherwise noted. Holes shall be subpunched or subdrilled 11/16" Ø and reamed in the field to 13/16" Ø for ¾" Ø bolts, unless otherwise noted.

All holes in existing structural steel shall be field drilled using shop drilled holes of fabricated plates as a template, where applicable. Torching of holes is not allowed.

Existing structural steel that will be in contact with new structural steel shall be cleaned and painted prior to erection of new steel as required by "Cleaning and Painting Steel Bridge No. 1".

For billing details of Furnishing and Erecting Structural Steel & Structural Steel Removal details, see Structural Sheet 25 of 63.

WILLETT HOFMANN & ASSOCIATES INC
ENGINEERING ARCHITECTURE LAND SURVEYING
809 EAST 2ND STREET, DIXON, IL 61021-0367
T: 815-284-3381 DESIGN FIRM: #184-000918

DESIGNED - PV	REVISED -		
CHECKED - PLP	REVISED -		
DRAWN - RDA	REVISED -		
CHECKED - PLP	REVISED -		

WINNEBAGO COUNTY
F.A.P. 0412 (ALPINE RD) OVER FOREST HILLS RD
STATION 504+16.50

STRUCTURAL STEEL
STRUCTURE NO. 101-3068
STRUCTURAL SHEET NO. 23 OF 63 SHEETS

F.A.P. RTE.	SECTION	COUNTY	TOTAL SHEETS	SHEET NO.
412	16-00620-00-BR	WINNEBAGO	109	46
	WHA* 1017D17	CONTRACT NO. 85704		
	ILLINOIS FED. AID PROJECT 7K29(857)			

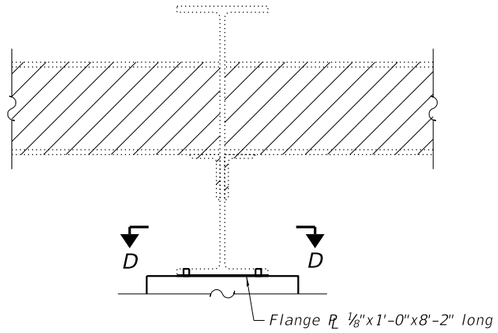

REPAIR B

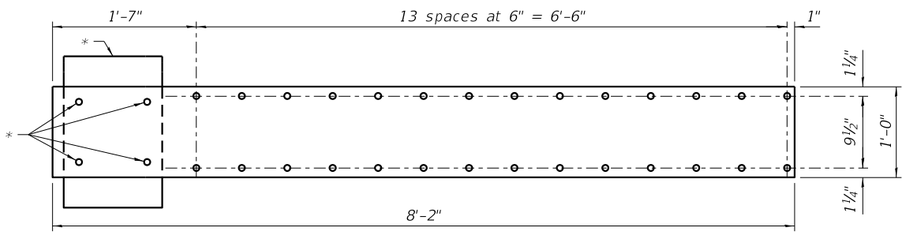

SECTION D-D

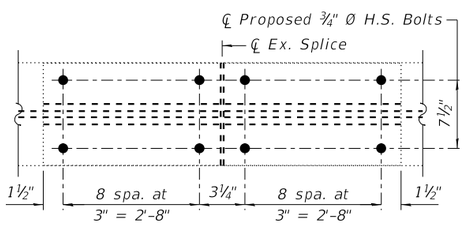

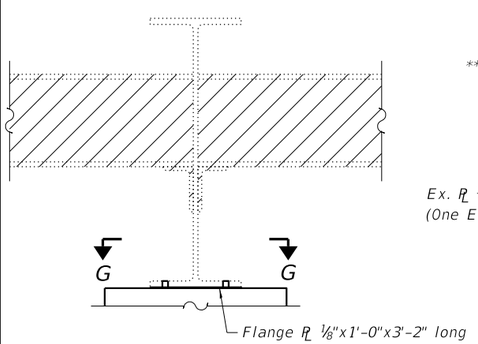

REPAIR D

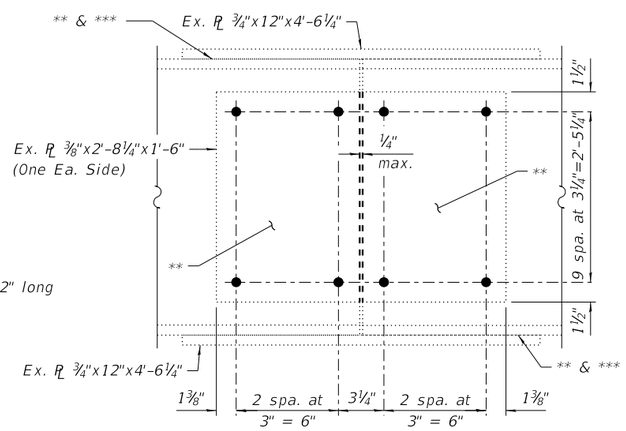

EXISTING FIELD SPLICE DETAIL - BOLT REPLACEMENT

60 Web Bolts per Splice, Two sets of 36 Flange Bolts per Splice
30 Splices Total

(Removal of existing bolts paid for as Structural Steel Removal;
new bolts paid for as Erect Structural Steel; See Special Provisions)

** Contact surfaces for splice plates and base metal of existing beam shall not be painted.

*** Contact surfaces for flange splice plates and base metal of existing beam shall be roughened as specified per Article 506.07 for Blast-cleaning to a Class B Surface.

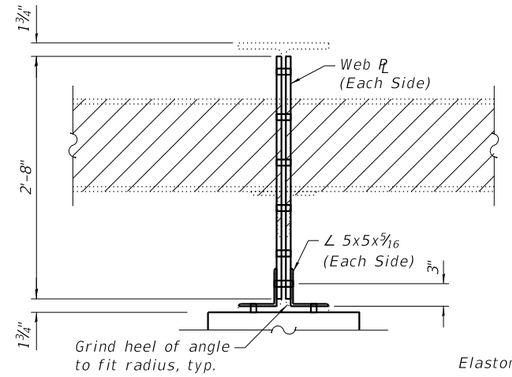

SECTION E-E

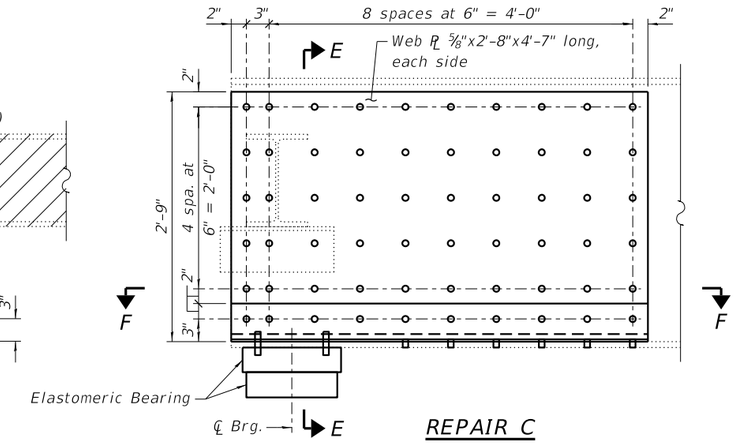

REPAIR C

LEGEND:

= Structural Steel Removal

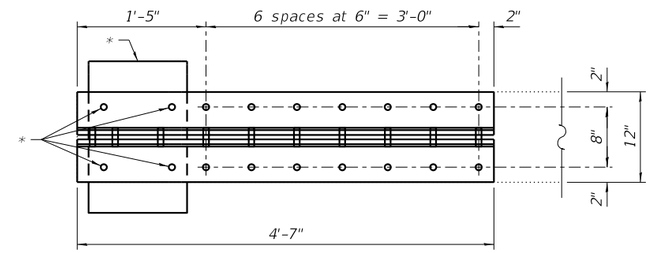

SECTION F-F

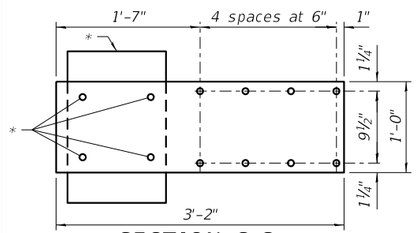

SECTION G-G

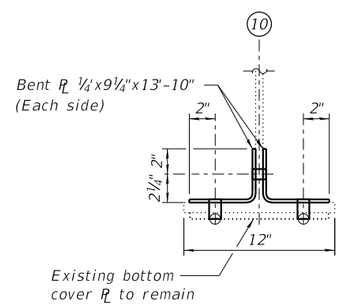

SECTION H-H

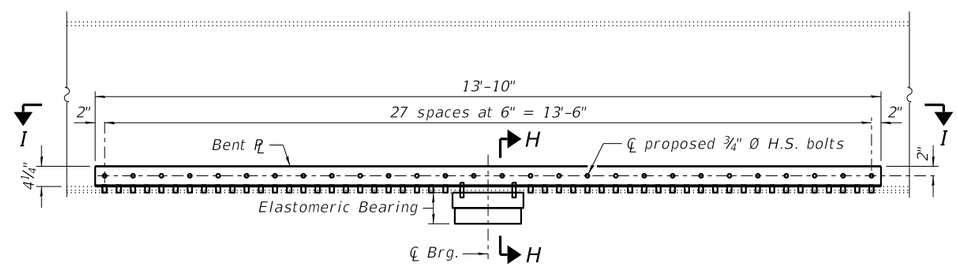

REPAIR E

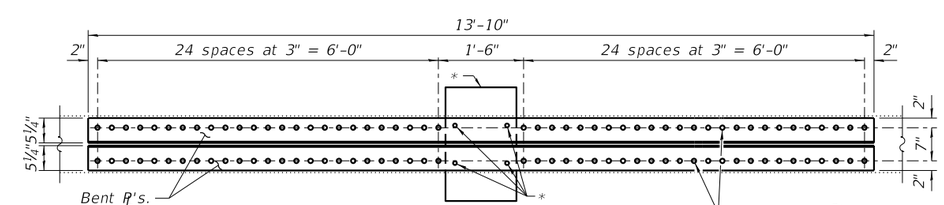

SECTION I-I

NOTES:

* For Bearing PL & Threaded Stud details, see Structural Sheet 26 of 63.

WILLETT HOFMANN & ASSOCIATES INC
ENGINEERING ARCHITECTURE LAND SURVEYING
809 EAST 2ND STREET, DIXON, IL 61021-0367
T: 815-284-3381 DESIGN FIRM: #184-000918

DESIGNED - PV	REVISED -		
CHECKED - PLP	REVISED -		
DRAWN - RDA	REVISED -		
CHECKED - PLP	REVISED -		

WINNEBAGO COUNTY
F.A.P. 0412 (ALPINE RD) OVER FOREST HILLS RD
STATION 504+16.50

STRUCTURAL STEEL
STRUCTURE NO. 101-3068

STRUCTURAL SHEET NO. 24 OF 63 SHEETS

F.A.P. RTE.	SECTION	COUNTY	TOTAL SHEETS	SHEET NO.
412	16-00620-00-BR	WINNEBAGO	109	47
WHA# 1017D17		CONTRACT NO. 85704		
	ILLINOIS FED. AID PROJECT 7K29(857)			

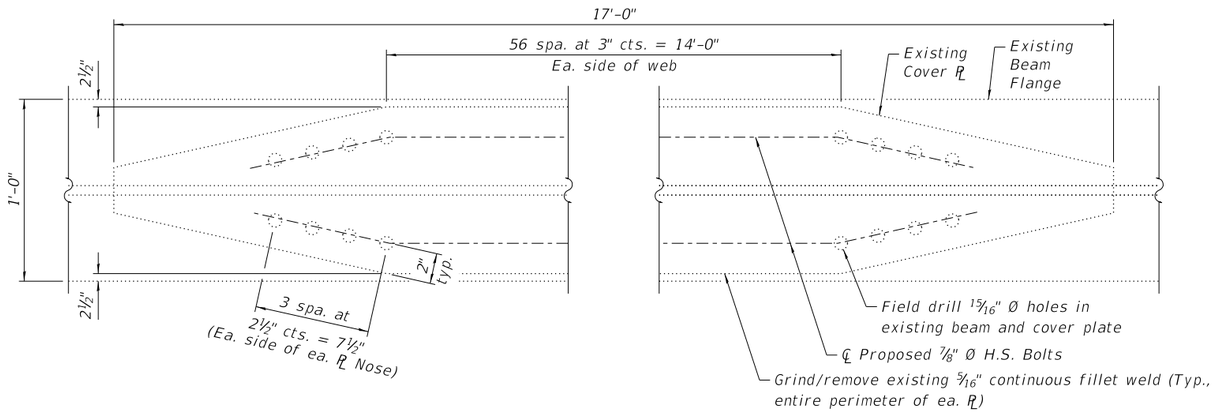

EXISTING TOP COVER PLATE MODIFICATION DETAIL-
HOLE DRILLING, BOLT INSTALLATION, AND WELD REMOVAL

126 Bolts per Cover PL
34'-8" of Perimeter Weld per Cover PL
30 Locations Total
(Paid for as Structural Steel Repair; See Special Provisions)

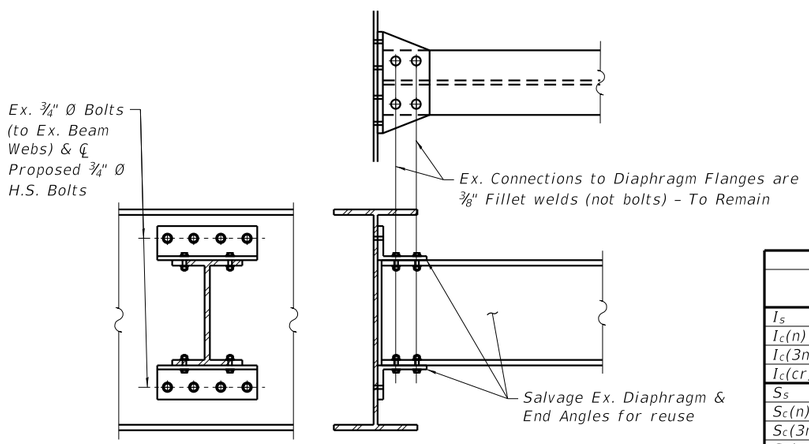

EXISTING INTERMEDIATE DIAPHRAGM DETAIL-
BOLT REPLACEMENT

16 Diaphragm Bolts per Assembly
117 Assemblies Total
(Removal paid for as Structural Steel Removal; new bolts paid for as Erect Structural Steel; See Special Provisions)

INTERIOR GIRDER MOMENT TABLE

		0.4 Sp. 1	0.5 Sp. 2 or 0.5 Sp. 3	0.6 Sp. 4	Pier 1	Pier 2	Pier 3
I_s	(in^4)	7,796	7,796	7,796	11,370	11,370	11,370
$I_c(n)$	(in^4)	22,010	22,010	22,010	—	—	—
$I_c(3n)$	(in^4)	16,505	16,505	16,505	—	—	—
$I_c(cr)$	(in^4)	—	—	—	—	—	—
S_s	(in^3)	439	439	439	622	622	622
$S_c(n)$	(in^3)	661	661	661	—	—	—
$S_c(3n)$	(in^3)	602	602	602	—	—	—
$S_c(cr)$	(in^3)	—	—	—	—	—	—
DC1	(k/')	0.958	0.958	0.958	0.958	0.958	0.958
M_{DC1}	('k)	164.5	191.9	141.1	387.8	437.5	375.1
DC2	(k/')	0.143	0.143	0.143	0.143	0.143	0.143
M_{DC2}	('k)	27.9	37.3	24.2	48.4	56.7	46.8
DW	(k/')	0.00	0.00	0.00	0.00	0.00	0.00
M_{DW}	('k)	0.0	0.0	0.0	0.0	0.0	0.0
LLDF		0.627	0.579	0.635	0.620	0.579	0.622
M_{LL+IM}	('k)	595.4	692.7	561.1	458.1	515.3	442.6
f_1 (Strength I)	(ksi)	16.3	16.3	16.3	14.2	4.5	15.1
$M_u + \frac{1}{3} f_1 S_x$	('k)	1,565.3	1,779.3	1,473.6	—	—	—
$\phi_f M_n$	('k)	2,437.9	2,419.3	2,457.8	—	—	—
f_s DC1	(ksi)	4.5	5.3	3.9	7.5	8.4	7.2
f_s DC2	(ksi)	0.6	0.7	0.5	0.9	1.1	0.9
f_s DW	(ksi)	0.0	0.0	0.0	0.0	0.0	0.0
f_s (LL+IM)	(ksi)	10.8	12.6	10.2	8.8	9.9	8.5
f_1 (Service II)	(ksi)	10.0	10.0	10.0	10.0	10.0	10.0
$f_s + f1/2$ (Service II)	(ksi)	24.1	27.3	22.6	24.9	27.5	24.2
$0.95R_hF_{yf}$ (+M) $0.8R_hF_{yf}$ (−M)	(ksi)	34.2	34.2	34.2	28.8	28.8	28.8
$f_s + f_{1/3}$ (Total)(Strength I)	(ksi)	30.7	34.9	28.7	30.7	30.8	30.1
$\phi_f F_n$	(ksi)	36.0	36.0	36.0	30.8	30.8	30.8
V_f	(k)	63.7	61.5	63.7	—	—	—

I_s, S_s: Non-composite moment of inertia and section modulus of the steel section used for computing f_s(Total-Strength I, and Service II) due to non-composite dead loads ($in.^4$ and $in.^3$).

$I_c(n)$, $S_c(n)$: Composite moment of inertia and section modulus of the steel and deck based upon the modular ratio, "n", used for computing f_s(Total-Strength I, and Service II) in uncracked sections due to short-term composite live loads ($in.^4$ and $in.^3$).

$I_c(3n)$, $S_c(3n)$: Composite moment of inertia and section modulus of the steel and deck based upon 3 times the modular ratio, "3n", used for computing f_s(Total-Strength I, and Service II) in uncracked sections, due to long-term composite (superimposed) dead loads ($in.^4$ and $in.^3$).

$I_c(cr)$, $S_c(cr)$: Composite moment of inertia and section modulus of the steel and longitudinal deck reinforcement, used for computing f_s (Total-Strength I and Service II) in cracked sections, due to both short-term composite live loads and long-term composite (superimposed) dead loads ($in.^4$ and $in.^3$).

DC1: Un-factored non-composite dead load (kips/ft.).

M_{DC1}: Un-factored moment due to non-composite dead load (kip-ft.).

DC2: Un-factored long-term composite (superimposed excluding future wearing surface) dead load (kips/ft.).

M_{DC2}: Un-factored moment due to long-term composite (superimposed excluding future wearing surface) dead load (kip-ft.).

DW: Un-factored long-term composite (superimposed future wearing surface only) dead load (kips/ft.).

M_{DW}: Un-factored moment due to long-term composite (superimposed future wearing surface only) dead load (kip-ft.).

LLDF: Moment live load distribution factor.

M_{LL+IM}: Un-factored live load moment plus dynamic load allowance (impact) (kip-ft.).

M_u (Strength I): Factored design moment (kip-ft.).
$1.25\ (M_{DC1} + M_{DC2}) + 1.5\ M_{DW} + 1.75\ M_{LL+IM}$

$\phi_f M_n$: Compact composite positive moment capacity computed according to Article 6.10.7.1 or non-slender negative moment capacity according to Article A6.1.1 or A6.1.2 (kip-ft).

f_s DC1: Un-factored stress at edge of flange for controlling steel flange due to vertical non-composite dead loads as calculated below (ksi).
M_{DC1} / S_{nc}

f_s DC2: Un-factored stress at edge of flange for controlling steel flange due to vertical composite dead loads as calculated below (ksi).
$M_{DC2} / S_c(3n)$ or $M_{DC2} / S_c(cr)$ as applicable.

f_s DW: Un-factored stress at edge of flange for controlling steel flange due to vertical composite future wearing surface loads as calculated below (ksi).
$M_{DW} / S_c(3n)$ or $M_{DW} / S_c(cr)$ as applicable.

f_s (LL+IM): Un-factored stress at edge of flange for controlling steel flange due to vertical composite live load plus impact loads as calculated below (ksi).
$M_{LL+IM} / S_c(n)$ or $M_{DW} / S_c(cr)$ as applicable.

f_s (Service II): Sum of stresses as computed below (ksi).
$f_{sDC1} + f_{sDC2} + f_{sDW} + 1.3\ f_s(_{LL+IM})$

$0.95R_hF_yf$: Composite stress capacity for Service II loading according to Article 6.10.4.2 (ksi).

f_s (Total)(Strength I): Sum of stresses as computed below on non-compact section (ksi).
$1.25\ (f_{sDC1} + f_{sDC2}) + 1.5\ f_{sDW} + 1.75\ f_s(_{LL+IM})$

$\phi_f F_n$: Non-Compact composite positive or negative stress capacity for Strength I loading according to Article 6.10.7 or 6.10.8 (ksi).

V_f: Maximum factored shear range in span computed according to Article 6.10.10.

INTERIOR GIRDER REACTION TABLE

		Abutments or Pier 1 or Pier 3	Pier 2
LLDF		0.737	0.737
OCF		1.243	1.243
R_{DC1}	(k)	65.66	69.26
R_{DC2}	(k)	9.58	10.33
R_{DW}	(k)	0.00	0.00
R_{LL1}	(k)	56.94	102.29
R_{IM1}	(k)	18.79	18.74
R_{LL2}	(k)	137.81	143.13
R_{IM2}	(k)	31.68	32.22
R_{Total}	(k)	244.73	254.93

BILL OF MATERIAL

Item	Unit	Total
Erecting Structural Steel	L. Sum	1
Structural Steel Removal	Pound	412,955
Structural Steel Repair	Pound	9,672

WILLETT HOFMANN & ASSOCIATES INC
ENGINEERING ARCHITECTURE LAND SURVEYING
809 EAST 2ND STREET, DIXON, IL 61021-0367
T: 815-284-3381 DESIGN FIRM: #184-000918

DESIGNED - PV	REVISED -	WINNEBAGO COUNTY	STRUCTURAL STEEL
CHECKED - PLP	REVISED -	F.A.P. 0412 (ALPINE RD) OVER FOREST HILLS RD	STRUCTURE NO. 101-3068
DRAWN - RDA	REVISED -	STATION 504+16.50	STRUCTURAL SHEET NO. 25 OF 63 SHEETS
CHECKED - PLP	REVISED -		

F.A.P. RTE.	SECTION	COUNTY	TOTAL SHEETS	SHEET NO.
412	16-00620-00-BR	WINNEBAGO	109	48
	WHA* 1017D17	CONTRACT NO. 85704		
	ILLINOIS FED. AID PROJECT 7K29(857)			

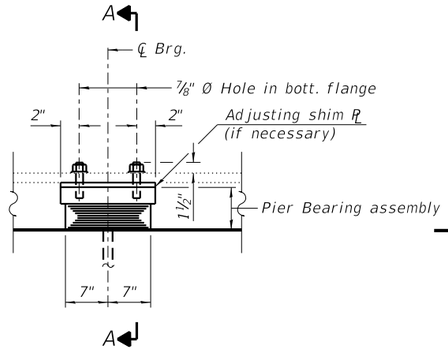

ELEVATION AT PIERS

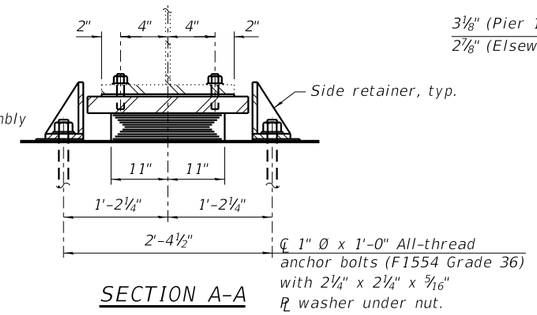

SECTION A-A

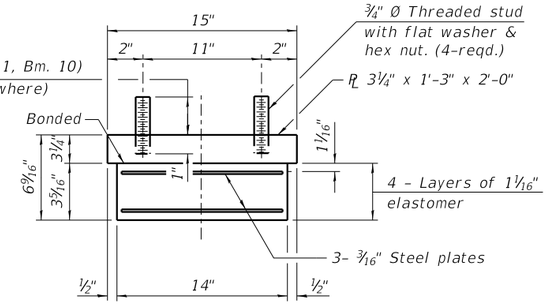

PIER BEARING ASSEMBLY

Shim plates shall not be placed under bearing assembly.

TYPE I ELASTOMERIC EXP. BRG. - PIER #1 & PIER #3

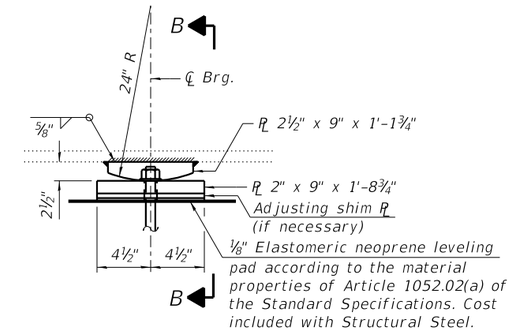

ELEVATION AT PIER

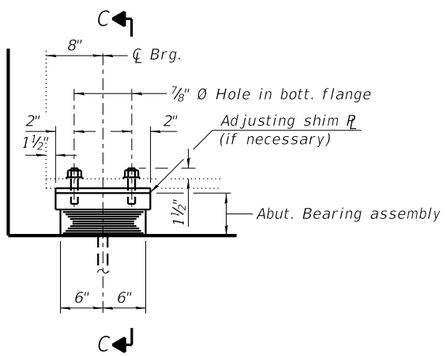

ELEVATION AT ABUT.

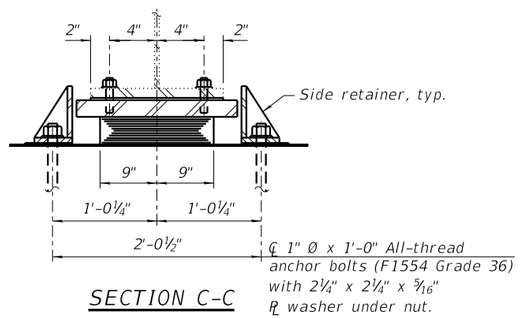

SECTION C-C

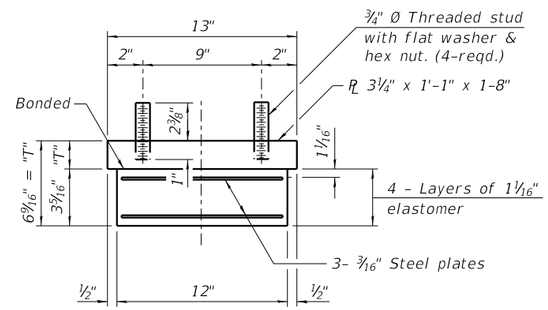

ABUTMENT BEARING ASSEMBLY

Shim plates shall not be placed under bearing assembly.

TYPE I ELASTOMERIC EXP. BRG. - SOUTH & NORTH ABUT.

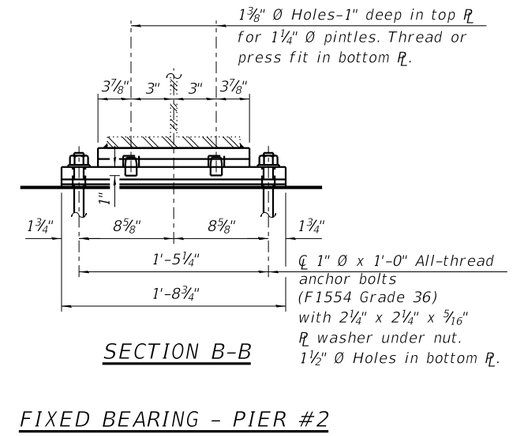

SECTION B-B

FIXED BEARING - PIER #2

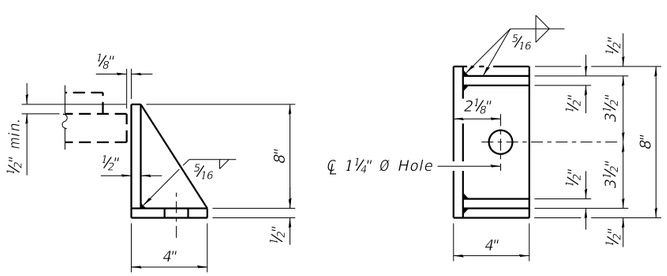

SIDE RETAINER

Equivalent rolled angle with stiffeners will be allowed in lieu of welded plates.

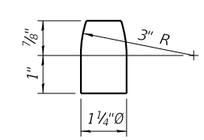

PINTLE

TABLE - ABUT. TOP PLATE THICKNESS

Location	Thickness "T" (in.)
S. Abut., Beam 5 & 8	3½"
S. Abut., Beam 7	3⅞"
All other locations	3¼"

NOTES:

Two ⅛ in. adjusting shims shall be provided for each bearing in addition to all other plates or shims and placed as shown on bearing details.

Side retainers and stainless steel plates shall be included in the cost of Elastomeric Bearing Assembly, Type I.

Anchor bolts and side retainers at all supports shall be installed as each member is erected unless an equivalent temporary means of lateral restraint is used.

BILL OF MATERIAL

Item	Unit	Total
Furnishing and Erecting Structural Steel	Pound	2,004
Elastomeric Bearing Assembly Type I	Each	40
Anchor Bolts, 1"	Each	100

WILLETT HOFMANN & ASSOCIATES INC
ENGINEERING ARCHITECTURE LAND SURVEYING
809 EAST 2ND STREET, DIXON, IL 61021-0367
T: 815-284-3381 DESIGN FIRM: #184-000918

DESIGNED - PV	REVISED -	WINNEBAGO COUNTY F.A.P. 0412 (ALPINE RD) OVER FOREST HILLS RD STATION 504+16.50	BEARING DETAILS STRUCTURE NO. 101-3068 STRUCTURAL SHEET NO. 26 OF 63 SHEETS
CHECKED - PLP	REVISED -		
DRAWN - RDA	REVISED -		
CHECKED - PLP	REVISED -		

F.A.P. RTE.	SECTION	COUNTY	TOTAL SHEETS	SHEET NO.
412	16-00620-00-BR	WINNEBAGO	109	49
WHA# 1017D17		CONTRACT NO. 85704		
	ILLINOIS	FED. AID PROJECT 7K29(857)		

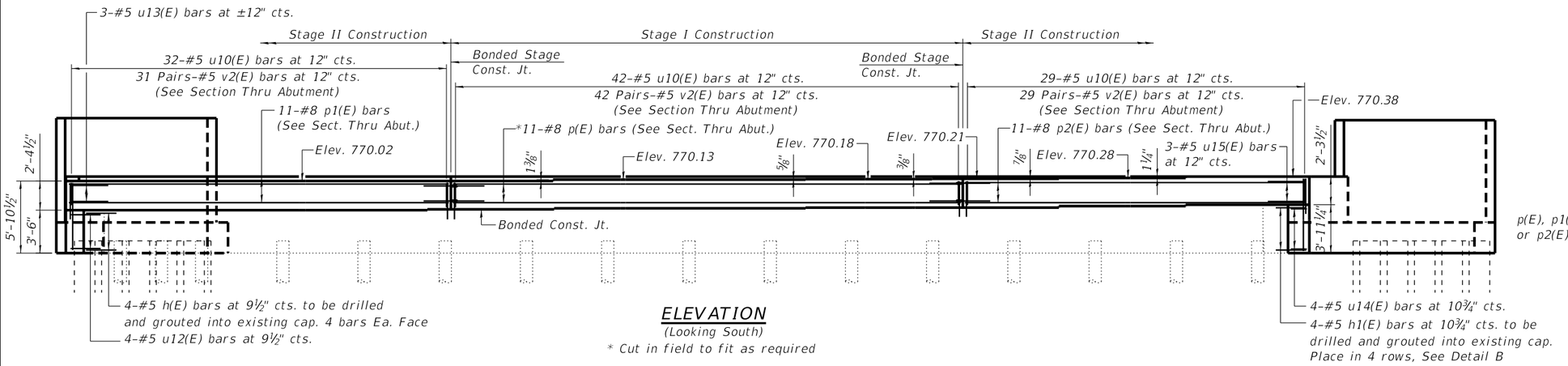

ELEVATION

(Looking South)

* Cut in field to fit as required

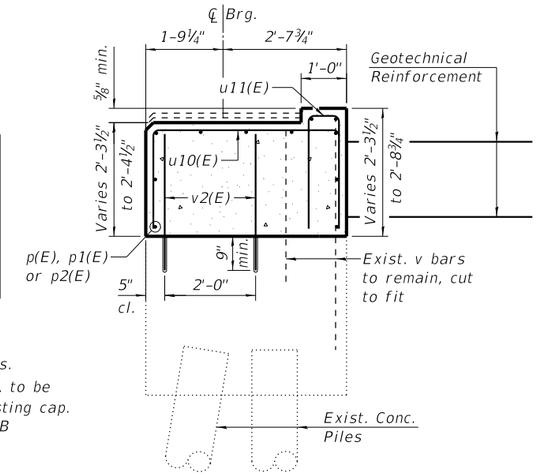

SECTION THRU ABUTMENT

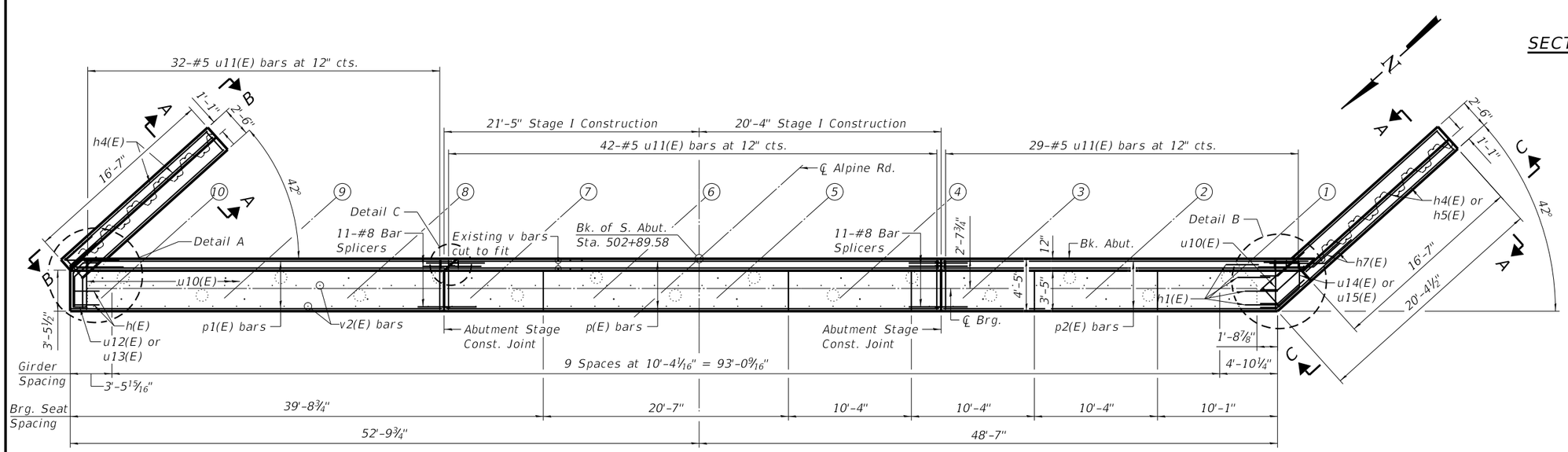

PLAN

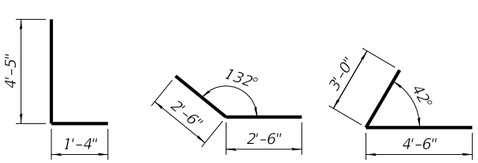

BAR d3(E) BAR h2(E) BAR h6(E)

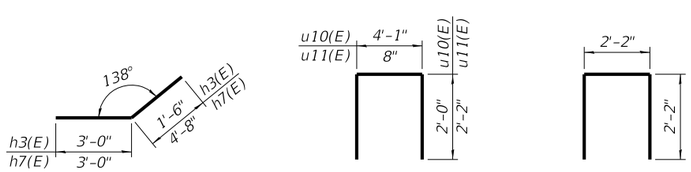

BARS h3(E) & h7(E) BARS u10(E) & u11(E) BARS u16(E)

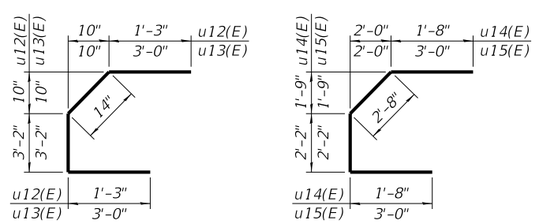

BARS u12(E) & u13(E) BARS u14(E) & u15(E)

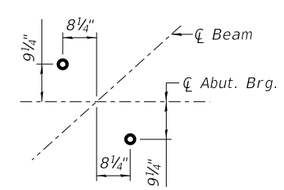

ANCHOR BOLT LAYOUT

NOTES:

All exposed edges shall be chamfered ¾" unless otherwise noted.

Space reinforcement in cap to miss anchor bolts.

For Section A-A, B-B, C-C, Details A, B, and C See Structural Sheet 28 of 63.

Pour steps monolithically with cap.

For Bearing Details, See Structural Sheet 26 of 63.

For standard excavation and backfill treatment behind abutment, see Structural Sheet 31 of 63.

Drilling an grouting of reinforcement bars shall be incidental to Concrete Structures.

S. ABUTMENT BILL OF MATERIAL

Bar	No.	Size	Length	Shape
d3(E)	68	#5	5'-9"	L
h(E)	8	#5	2'-4"	
h1(E)	16	#5	2'-8"	
h2(E)	4	#5	5'-0"	
h3(E)	6	#5	4'-6"	
h4(E)	30	#5	16'-3"	
h5(E)	10	#5	19'-11"	
h6(E)	8	#5	7'-6"	
h7(E)	10	#5	7'-8"	
p(E)	11	#8	41'-5"	
p1(E)	11	#8	31'-0"	
p2(E)	11	#8	27'-11"	
u10(E)	105	#5	8'-1"	
u11(E)	103	#5	5'-0"	
u12(E)	4	#5	6'-10"	
u13(E)	3	#5	10'-4"	
u14(E)	4	#5	8'-2"	
u15(E)	3	#5	10'-10"	
u16(E)	38	#6	6'-6"	
t1(E)	14	#5	16'-3"	
t2(E)	10	#5	19'-11"	
v2(E)	208	#5	2'-10"	
v3(E)	6	#5	6'-1"	
v4(E)	5	#5	6'-1"	
v5(E)	68	#5	8'-3"	
w2(E)	38	#6	2'-2"	
Concrete Structures			Cu. Yd.	63.4
Reinforcement Bars, Epoxy Coated			Pound	8,090
Bar Splicers			Each	22
Permanent Sheet Piling			Sq. Ft.	330

WILLETT HOFMANN & ASSOCIATES INC
ENGINEERING ARCHITECTURE LAND SURVEYING
809 EAST 2ND STREET, DIXON, IL 61021-0367
T: 815-284-3381 DESIGN FIRM: #184-000918

DESIGNED - EEL	REVISED -		
CHECKED - PLP	REVISED -		
DRAWN - FDL	REVISED -		
CHECKED - PLP	REVISED -		

WINNEBAGO COUNTY
F.A.P. 0412 (ALPINE RD) OVER FOREST HILLS RD
STATION 504+16.50

SOUTH ABUTMENT DETAILS
STRUCTURE NO. 101-3068

STRUCTURAL SHEET NO. 27 OF 63 SHEETS

F.A.P. RTE.	SECTION	COUNTY	TOTAL SHEETS	SHEET NO.
412	16-00620-00-BR	WINNEBAGO	109	50
	WHA* 1017D17	CONTRACT NO. 85704		
		ILLINOIS FED. AID PROJECT 7K29(857)		

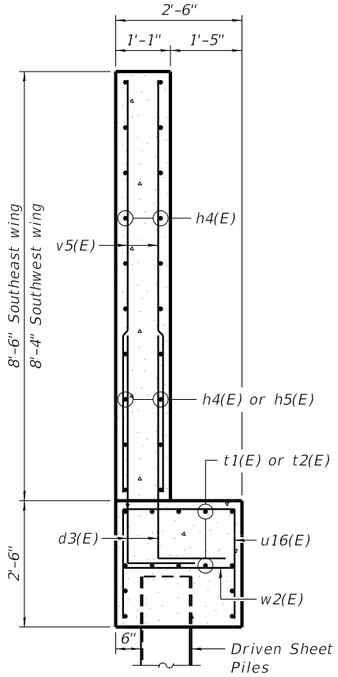

SECTION A-A

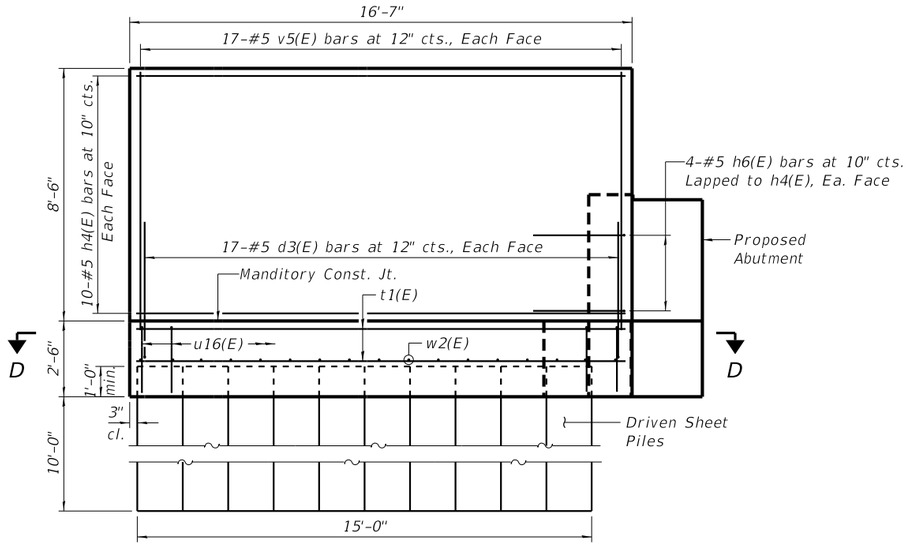

SECTION B-B

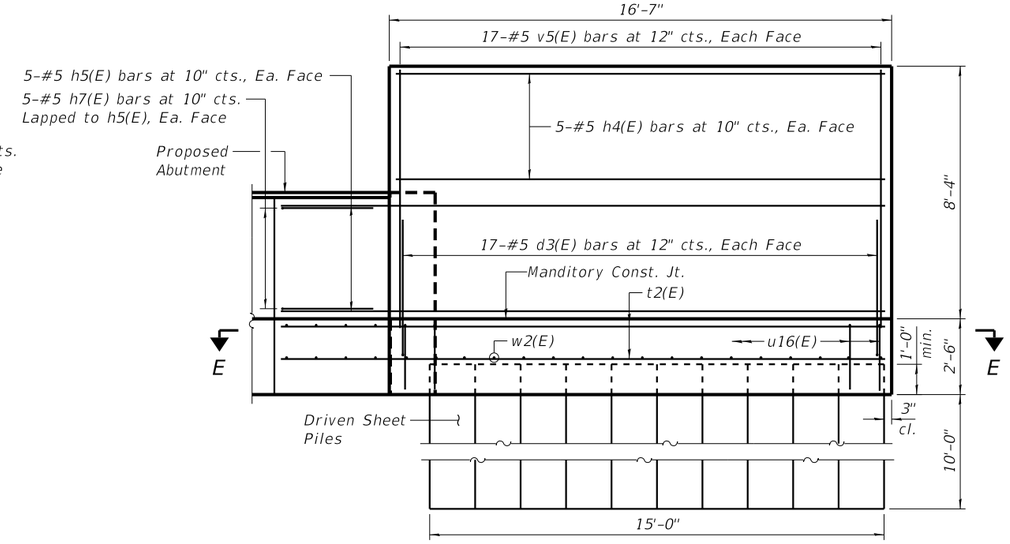

SECTION C-C

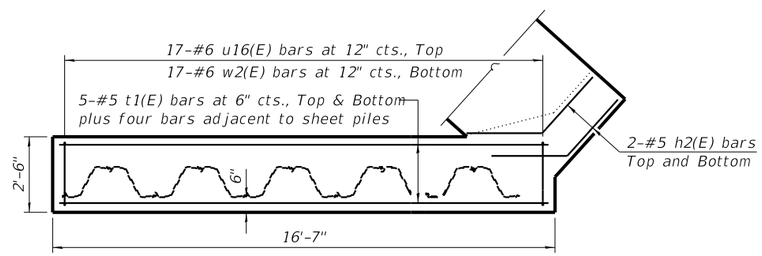

SECTION D-D

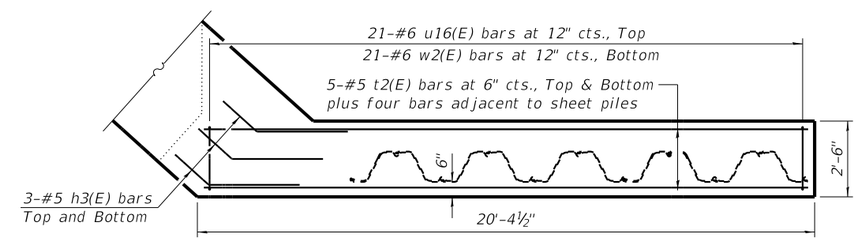

SECTION E-E

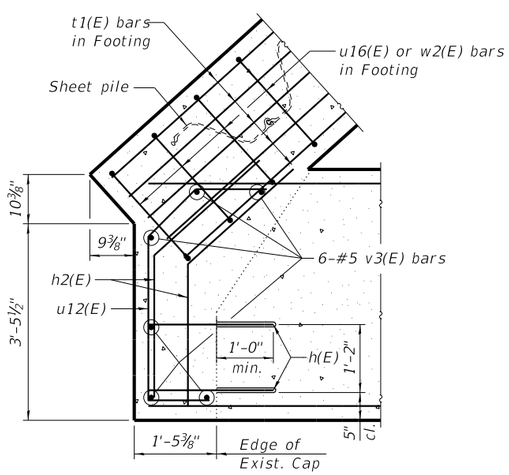

DETAIL A

Showing wingwall footing & abutment cap

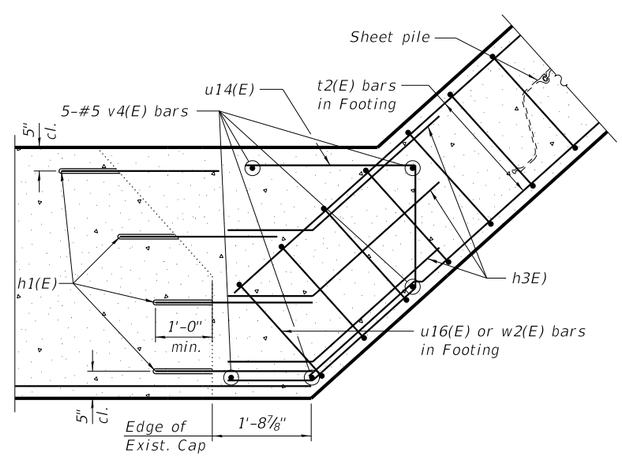

DETAIL B

Showing wingwall footing & abutment cap

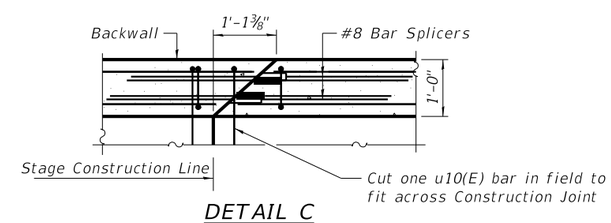

DETAIL C

Showing backwall Stage Construction Joint

NOTES:

For Bill of Material, See Structural Sheet 27 of 63.

WILLETT HOFMANN & ASSOCIATES INC
ENGINEERING ARCHITECTURE LAND SURVEYING
809 EAST 2ND STREET, DIXON, IL 61021-0367
T: 815-284-3381 DESIGN FIRM: #184-000918

DESIGNED -	REVISED -		
CHECKED -	REVISED -		
DRAWN -	REVISED -		
CHECKED -	REVISED -		

WINNEBAGO COUNTY
F.A.P. 0412 (ALPINE RD) OVER FOREST HILLS RD
STATION 504+16.50

SOUTH ABUTMENT DETAILS
STRUCTURE NO. 101-3068

STRUCTURAL SHEET NO. 28 OF 63 SHEETS

F.A.P. RTE.	SECTION	COUNTY	TOTAL SHEETS	SHEET NO.
412	16-00620-00-BR	WINNEBAGO	109	51
	WHA# 1017D17	CONTRACT NO. 85704		
	ILLINOIS	FED. AID PROJECT 7K29(857)		

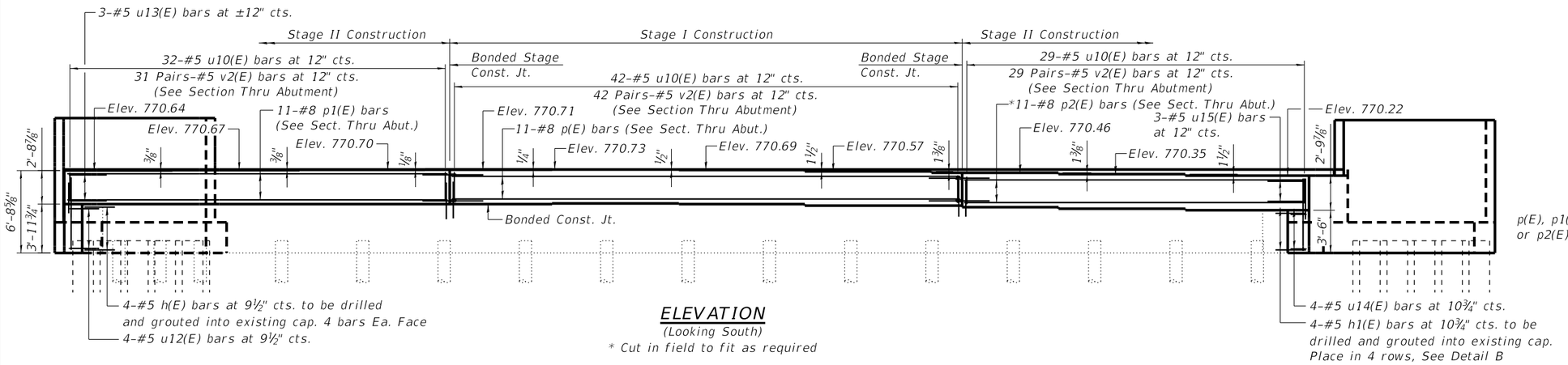

ELEVATION

(Looking South)

* Cut in field to fit as required

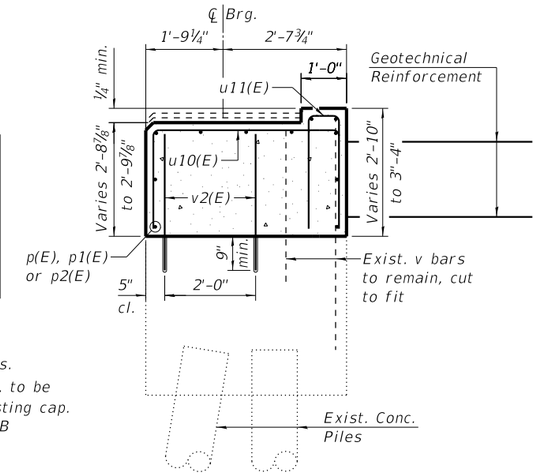

SECTION THRU ABUTMENT

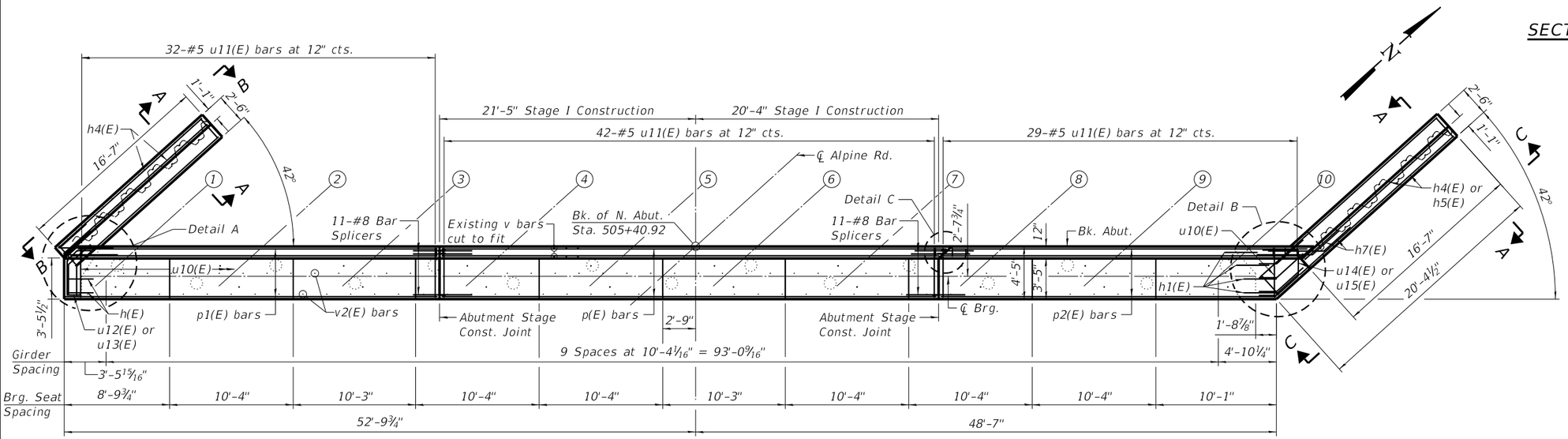

PLAN

N. ABUTMENT BILL OF MATERIAL

Bar	No.	Size	Length	Shape
d3(E)	68	#5	5'-9"	L
h(E)	8	#5	2'-4"	
h1(E)	16	#5	2'-8"	
h2(E)	4	#5	5'-0"	
h3(E)	6	#5	4'-6"	
h4(E)	30	#5	16'-3"	
h5(E)	10	#5	19'-11"	
h6(E)	8	#5	7'-6"	
h7(E)	10	#5	7'-8"	
p(E)	11	#8	41'-5"	
p1(E)	11	#8	31'-0"	
p2(E)	11	#8	27'-11"	
u10(E)	105	#5	8'-1"	
u11(E)	103	#5	5'-0"	
u12(E)	4	#5	6'-10"	
u13(E)	3	#5	10'-4"	
u14(E)	4	#5	8'-2"	
u15(E)	3	#5	10'-10"	
u16(E)	38	#6	6'-6"	
t1(E)	14	#5	16'-3"	
t2(E)	10	#5	19'-11"	
v2(E)	208	#5	2'-10"	
v3(E)	6	#5	6'-1"	
v4(E)	5	#5	6'-1"	
v5(E)	68	#5	8'-3"	
w2(E)	38	#6	2'-2"	
Concrete Structures			Cu. Yd.	71.0
Reinforcement Bars, Epoxy Coated			Pound	8,090
Bar Splicers			Each	22
Permanent Sheet Piling			Sq. Ft.	330

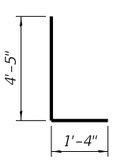

BAR d3(E)

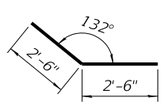

BAR h2(E)

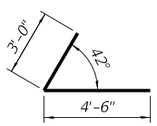

BAR h6(E)

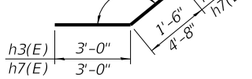

BARS h3(E) & h7(E)

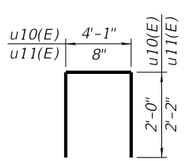

BARS u10(E) & u11(E)

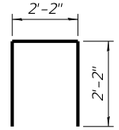

BARS u16(E)

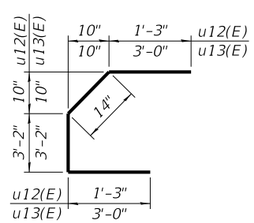

BARS u12(E) & u13(E)

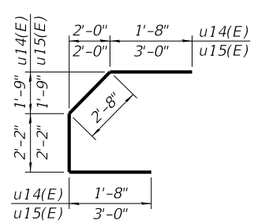

BARS u14(E) & u15(E)

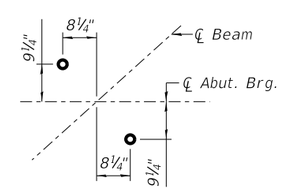

ANCHOR BOLT LAYOUT

NOTES:

All exposed edges shall be chamfered ¾" unless otherwise noted.

Space reinforcement in cap to miss anchor bolts.

For Section A-A, B-B, C-C, Details A, B, and C See Structural Sheet 30 of 63.

Pour steps monolithically with cap.

For Bearing Details, See Structural Sheet 26 of 63.

For standard excavation and backfill treatment behind abutment, see Structural Sheet 31 of 63.

Drilling an grouting of reinforcement bars shall be incidental to Concrete Structures.

WILLETT HOFMANN & ASSOCIATES INC
ENGINEERING ARCHITECTURE LAND SURVEYING
809 EAST 2ND STREET, DIXON, IL 61021-0367
T: 815-284-3381 DESIGN FIRM: #184-000918

DESIGNED - EEL	REVISED -		
CHECKED - PLP	REVISED -		
DRAWN - FDL	REVISED -		
CHECKED - PLP	REVISED -		

WINNEBAGO COUNTY
F.A.P. 0412 (ALPINE RD) OVER FOREST HILLS RD
STATION 504+16.50

NORTH ABUTMENT DETAILS
STRUCTURE NO. 101-3068

STRUCTURAL SHEET NO. 29 OF 63 SHEETS

F.A.P. RTE.	SECTION	COUNTY	TOTAL SHEETS	SHEET NO.
412	16-00620-00-BR	WINNEBAGO	109	52
	WHA* 1017D17	CONTRACT NO. 85704		
		ILLINOIS FED. AID PROJECT 7K29(857)		

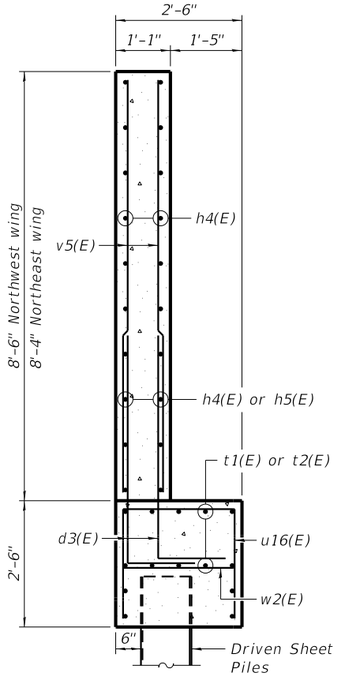

SECTION A-A

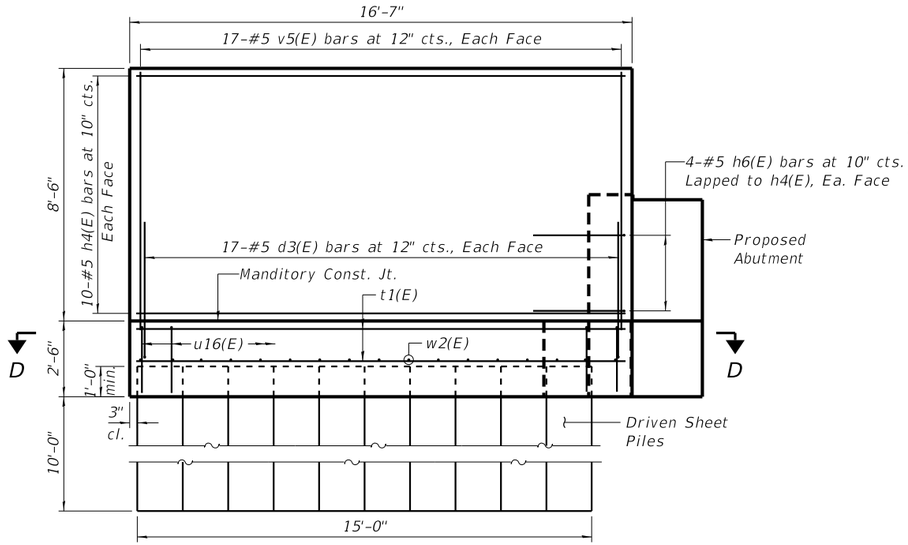

SECTION B-B

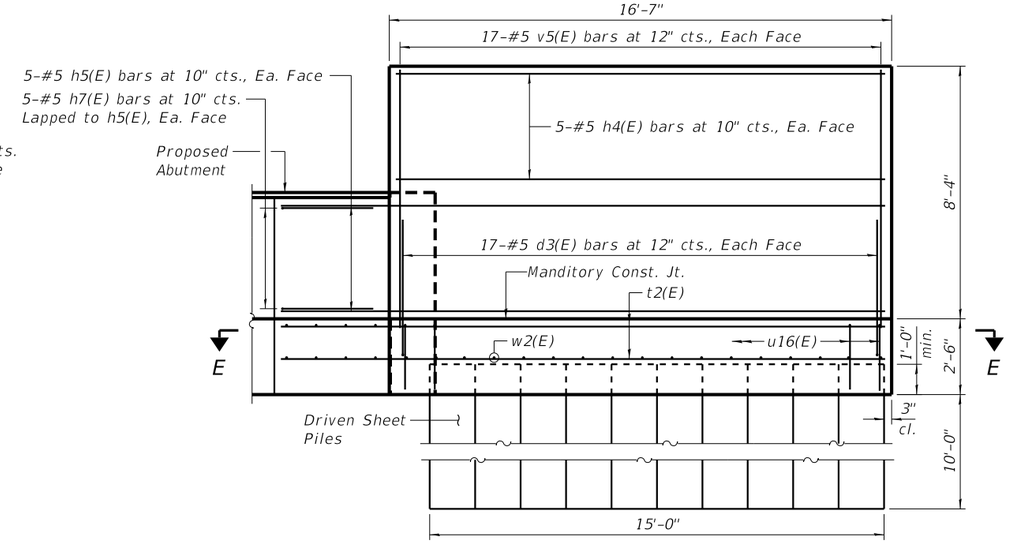

SECTION C-C

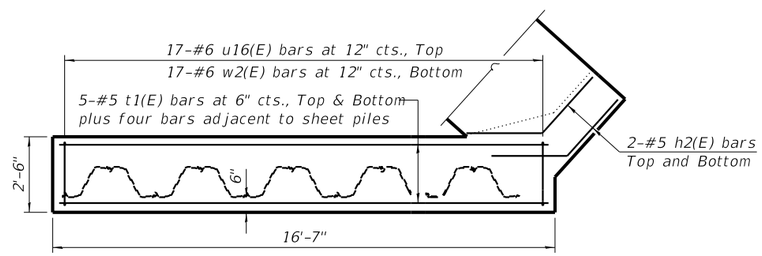

SECTION D-D

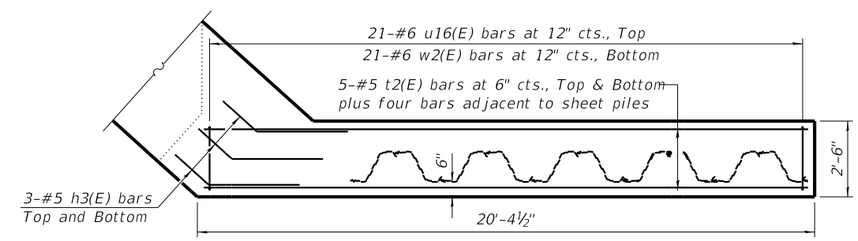

SECTION E-E

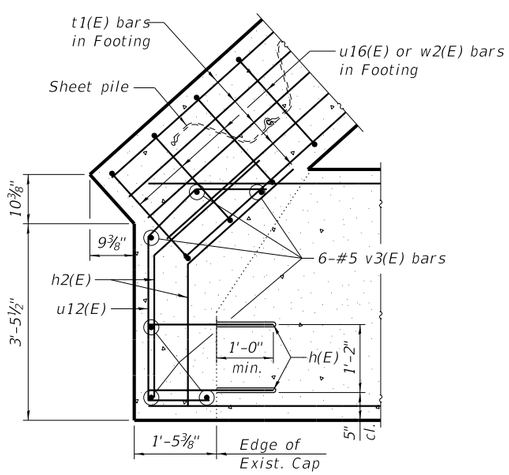

DETAIL A

Showing wingwall footing & abutment cap

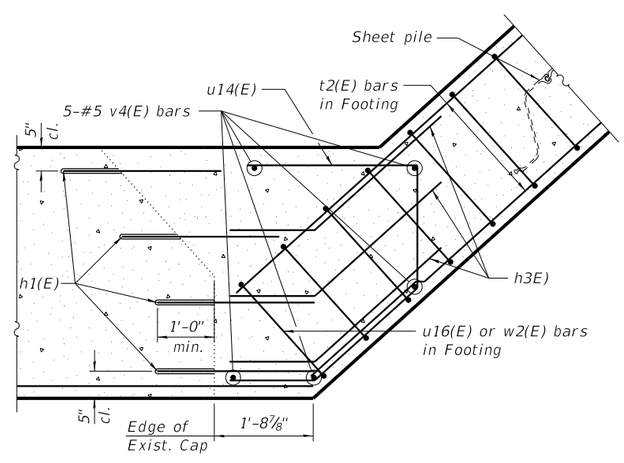

DETAIL B

Showing wingwall footing & abutment cap

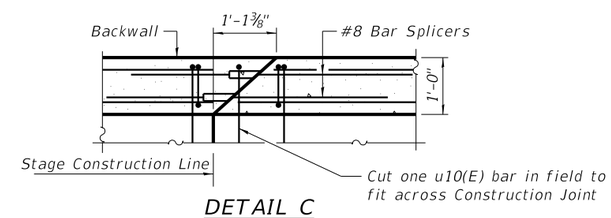

DETAIL C

Showing backwall Stage Construction Joint

NOTES:

For Bill of Material, See Structural Sheet 29 of 63.

WILLETT HOFMANN & ASSOCIATES INC
ENGINEERING ARCHITECTURE LAND SURVEYING
809 EAST 2ND STREET, DIXON, IL 61021-0367
T: 815-284-3381 DESIGN FIRM: #184-000918

DESIGNED -	REVISED -		
CHECKED -	REVISED -		
DRAWN -	REVISED -		
CHECKED -	REVISED -		

WINNEBAGO COUNTY
F.A.P. 0412 (ALPINE RD) OVER FOREST HILLS RD
STATION 504+16.50

NORTH ABUTMENT DETAILS
STRUCTURE NO. 101-3068

STRUCTURAL SHEET NO. 30 OF 63 SHEETS

F.A.P. RTE.	SECTION	COUNTY	TOTAL SHEETS	SHEET NO.
412	16-00620-00-BR	WINNEBAGO	109	53
	WHA# 1017D17	CONTRACT NO. 85704		
	ILLINOIS	FED. AID PROJECT 7K29(857)		

FILE = S:\PROJECTS\2017\1017D17_WNCH\DESIGN\CAD_SHEETS\1017D17_North Abument Details.dgn

PRINT_ORGANIZER_BW.pltcfg 11/4/2020 2:30:28 PM = PLOTTED

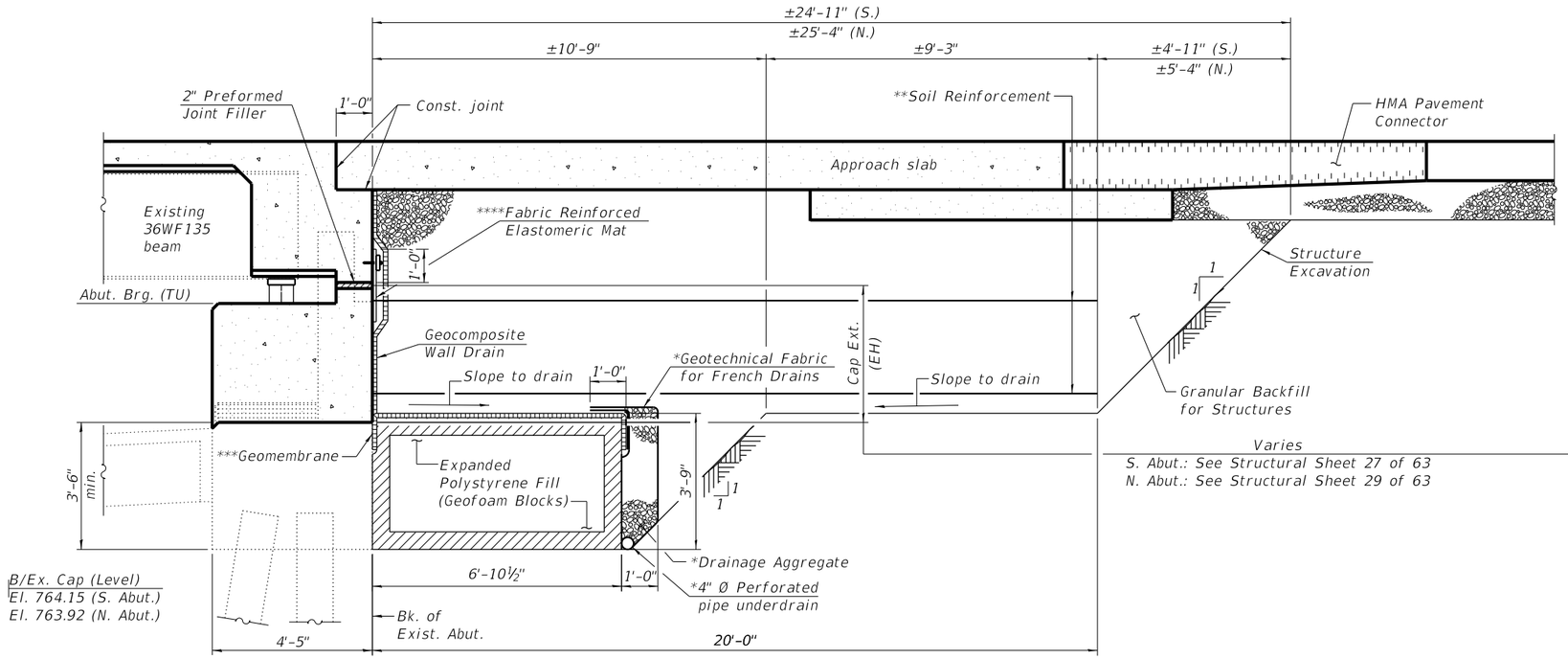

SECTION THRU SEMI-INTEGRAL ABUTMENT (N. & S.)

(Horiz. dim. @ Rt. ∠'s)

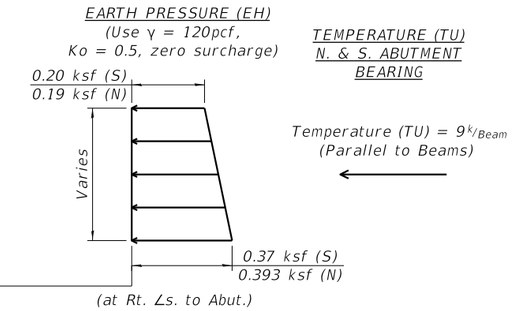

**GEOTECHNICAL REINFORCEMENT

NOTES:

1. Geotechnical Reinforcement shall be designed in accordance with the 2017 AASHTO LRFD Bridge Design Specifications, 8th. Edition.
2. Loads given are Service Loads and Suppliers of Geotechnical Reinforcement shall apply appropriate load factors to AASHTO load combinations.
3. See Special Provisions.

NOTES:

All drainage components shall extend to 2'-0" from the end of each wingwall

*Included in the cost of Pipe Underdrain for Structures 4" (See Special Provisions)

***Cost of Geomembrane shall be included in the contract unit price for Expanded Polystyrene Fill

****Fabric Reinforced Elastomeric Mat according to Section 1028 of the Standard Specifications. Fabric mat shall be 24" wide and attached full width and vertically at edges to the abutment cap with a ⅜" x 5" steel plate and ½" Ø studs with nuts and washers at 12" cts. Cost included with Concrete Superstructure.

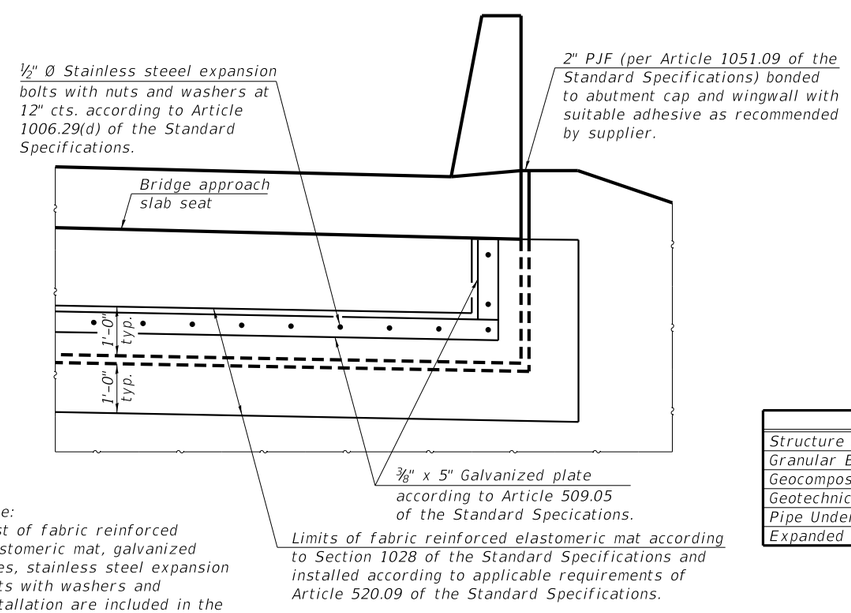

Note:
Cost of fabric reinforced elastomeric mat, galvanized lates, stainless steel expansion bolts with washers and installation are included in the cost of Concrete Superstructure.

ELEVATION

(Looking at back of abutment)

BILL OF MATERIAL

Item	Unit	S. Abut.	N. Abut.
Structure Excavation	Cu. Yd.	532	459
Granular Backfill for Structures	Cu. Yd.	446	513
Geocomposite Wall Drain	Sq. Yd.	68	72
Geotechnical Reinforcement	L. Sum	0.5	0.5
Pipe Underdrains for Structures, 4"	Foot	160	157
Expanded Polystyrene Fill	Cu. Yd.	98	98

WILLETT HOFMANN & ASSOCIATES INC
ENGINEERING ARCHITECTURE LAND SURVEYING
809 EAST 2ND STREET, DIXON, IL 61021-0367
T: 815-284-3381 DESIGN FIRM: #184-000918

DESIGNED - PV	REVISED -		
CHECKED - PLP	REVISED -		
DRAWN - FDL	REVISED -		
CHECKED - PLP	REVISED -		

WINNEBAGO COUNTY
F.A.P. 0412 (ALPINE RD) OVER FOREST HILLS RD
STATION 504+16.50

ABUTMENT BACKFILL DETAILS
STRUCTURE NO. 101-3068

STRUCTURAL SHEET NO. 31 OF 63 SHEETS

F.A.P. RTE.	SECTION	COUNTY	TOTAL SHEETS	SHEET NO.
412	16-00620-00-BR	WINNEBAGO	109	54
WHA* 1017D17		CONTRACT NO. 85704		
ILLINOIS	FED. AID PROJECT 7K29(857)			

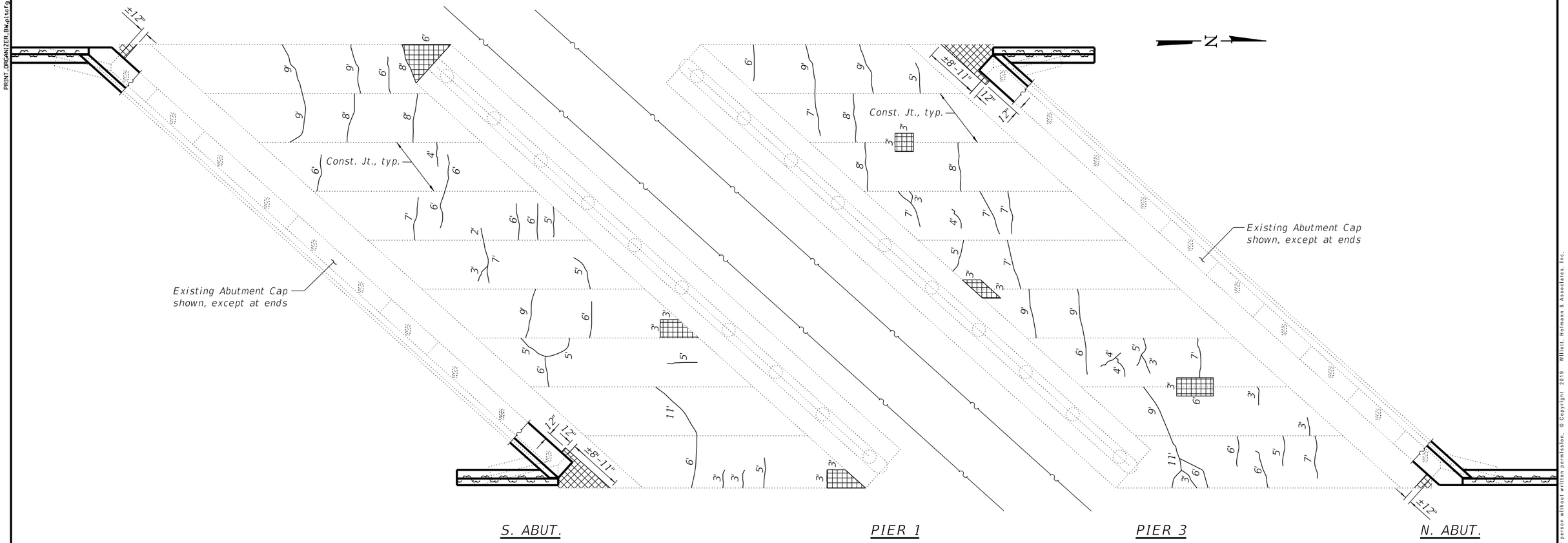

LEGEND

Epoxy Crack Injection

Slopewall Repair

Removal and replacement of Concrete Slopewall This work shall be included, and part of, paid for at the Contract Unit Price Per Square Yard for "Slopewall Repair".

NOTES:

Contractor shall provide a ¾" sawcut around perimeter of Concrete Slopewall Repair or Removal prior to starting any work. Cost included in the Contract Unit Price Per Square Yard for "Slopewall Repair".

Contractor shall salvage existing reinforcement in Concrete Slopewall and incorporate into new construction. Slope wall shall be reinforced with welded wire fabric, 6 in. x 6 in. – W4.0 x W4.0, weighing 58 lbs. per 100 sq. ft. See Special Provisions

BILL OF MATERIAL

Item	Unit	Total
Epoxy Crack Injection	Foot	382
Slopewall Repair	Sq. Yd.	17

WILLETT HOFMANN & ASSOCIATES INC
ENGINEERING ARCHITECTURE LAND SURVEYING
809 EAST 2ND STREET, DIXON, IL 61021-0367
T: 815-284-3381 DESIGN FIRM: #184-000918

DESIGNED - EEL	REVISED -		
CHECKED - BKC	REVISED -		
DRAWN - FDL	REVISED -		
CHECKED - BKC	REVISED -		

WINNEBAGO COUNTY
F.A.P. 0412 (ALPINE RD) OVER FOREST HILLS RD
STATION 504+16.50

SLOPEWALL DETERIORATION REPAIRS
STRUCTURE NO. 101-3068

STRUCTURAL SHEET NO. 32 OF 63 SHEETS

F.A.P. RTE.	SECTION	COUNTY	TOTAL SHEETS	SHEET NO.
412	16-00620-00-BR	WINNEBAGO	109	55
	WHA# 1017D17	CONTRACT NO. 85704		
	ILLINOIS	FED. AID PROJECT 7K29(857)		

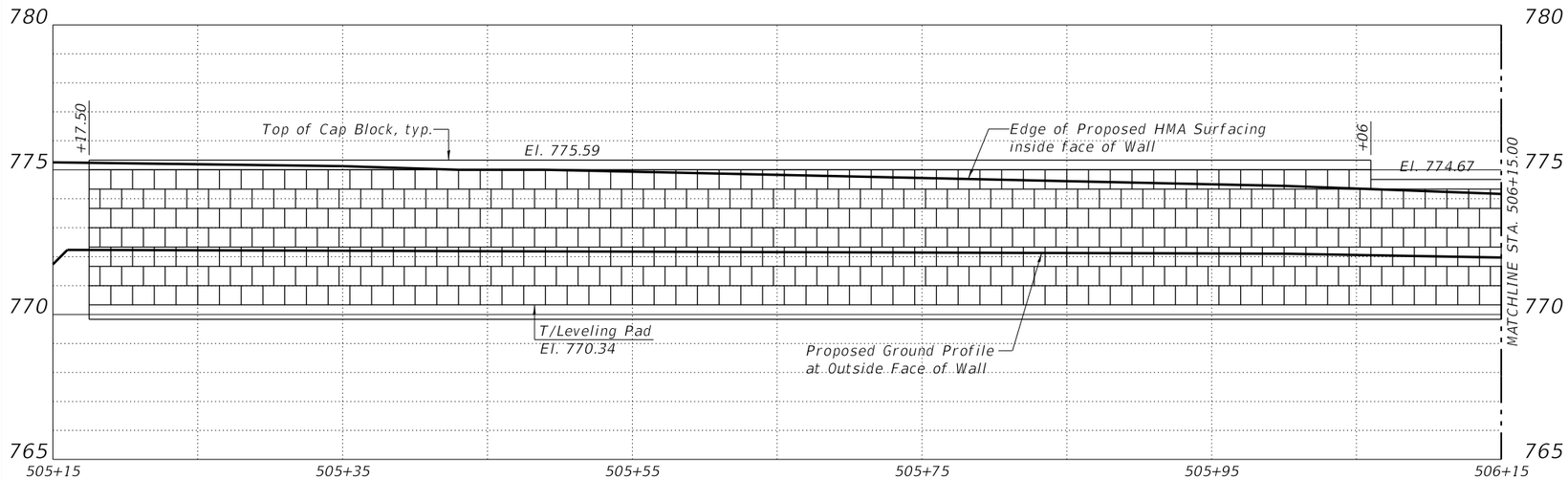

SEGMENTAL CONCRETE BLOCK WALL
STA. 505+17.50 TO 506+15.00

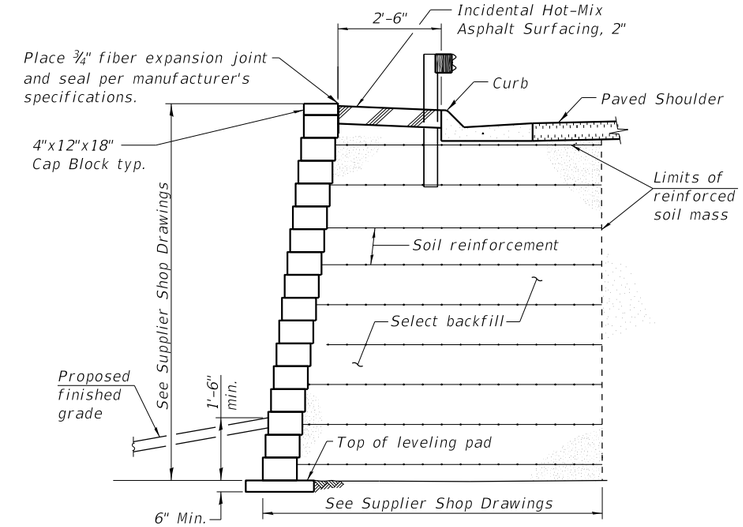

SECTION THRU
BLOCK WALL

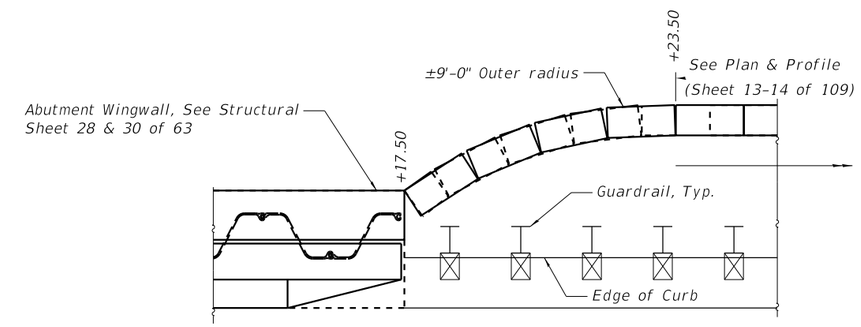

PLAN VIEW AT ABUTMENT

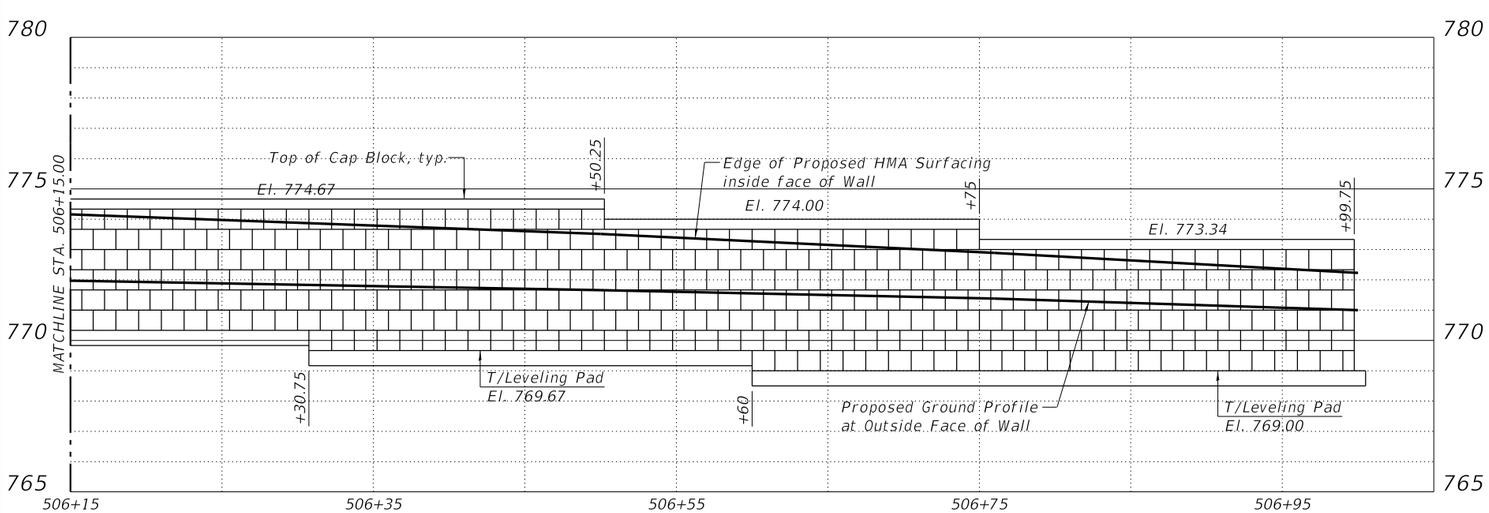

SEGMENTAL CONCRETE BLOCK WALL
STA. 506+15.00 TO 506+99.75

BILL OF MATERIAL

Item	Unit	Quantity
Structure Excavation	Cu. Yd.	76
Segmental Concrete Block Wall	Sq. Ft.	894

NOTES:

Contractor shall verify all elevations, dimensions and manufacturer's specifications prior to constructing wall.

The style of the Segmental Concrete Block Wall shall coordinate with the form liner and color of the bridge parapet.

All Segmental Concrete Block Wall Details shown in these plans are conceptual and are to be used for estimating purposes only. Actual details will depend on the Proposed Wall System submitted by the Contractor. Details for Wall Curves, Pipe Penetrations, Drainage Structures and other miscellaneous details shall be provided by the Wall Supplier.

WILLETT HOFMANN & ASSOCIATES INC
ENGINEERING ARCHITECTURE LAND SURVEYING
809 EAST 2ND STREET, DIXON, IL 61021-0367
T: 815-284-3381 DESIGN FIRM: #184-000918

DESIGNED - EEL	REVISED -		
CHECKED - PLP	REVISED -		
DRAWN - FDL	REVISED -		
CHECKED - PLP	REVISED -		

WINNEBAGO COUNTY
F.A.P. 0412 (ALPINE RD) OVER FOREST HILLS RD
STATION 504+16.50

SEGMENTAL CONCRETE BLOCK WALL DETAILS
STRUCTURE NO. 101-3068
STRUCTURAL SHEET NO. 33 OF 63 SHEETS

F.A.P. RTE.	SECTION	COUNTY	TOTAL SHEETS	SHEET NO.
412	16-00620-00-BR	WINNEBAGO	109	56
WHA* 1017D17		CONTRACT NO. 85704		
ILLINOIS FED. AID PROJECT 7K29(857)				

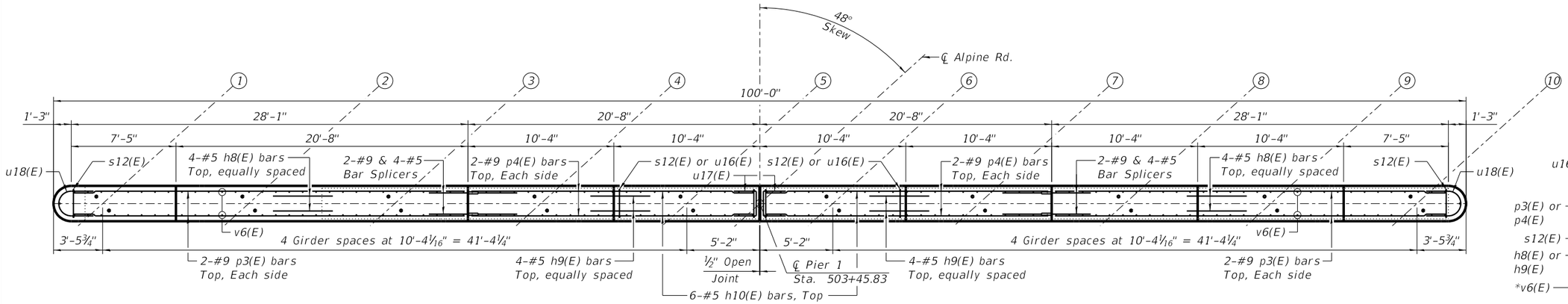

TOP PLAN

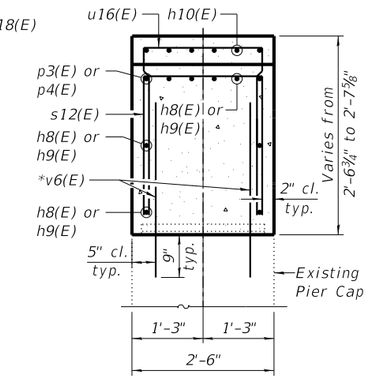

SETION A-A

*Bars shall be drilled and grouted according to Section 584 of the Standard Secifications. Cost incidental to Reinforcement Bars, Expoy Coated.

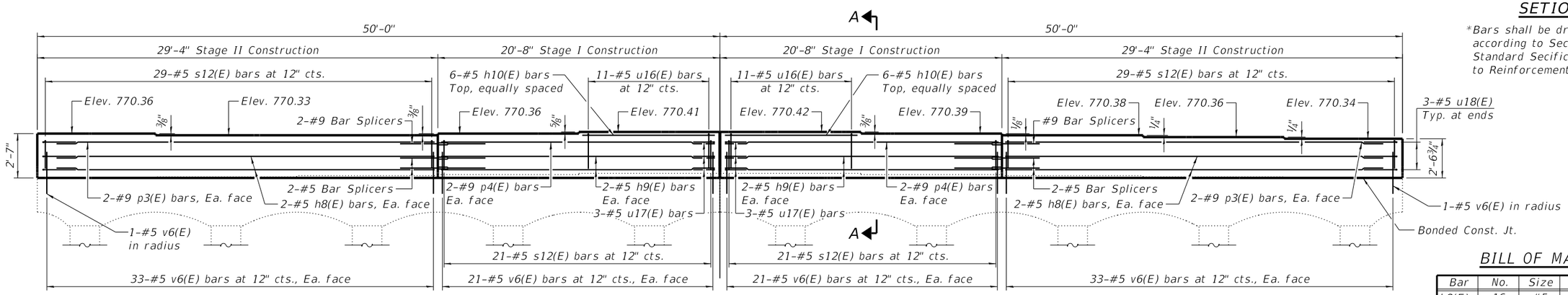

ELEVATION
(Looking North)

MIN. BAR LAP

#5 = 3'-7"
#9 = 6'-5"

BILL OF MATERIAL

Bar	No.	Size	Length	Shape
h8(E)	16	#5	27'-11"	
h9(E)	16	#5	20'-4"	
h10(E)	12	#5	10'-0"	
p3(E)	4	#9	27'-11"	
p4(E)	4	#9	20'-4"	
s12(E)	100	#5	6'-2"	
u16(E)	22	#5	6'-6"	
u17(E)	6	#5	5'-2"	
u18(E)	6	#5	6'-4"	
v6(E)	218	#5	3'-0"	
Concrete Structures			Cu. Yd.	23.5
Reinforcement Bars, Epoxy Coated			Pound	3,140
Bar Splicers			Each	20

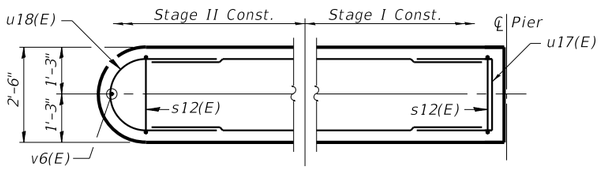

PLAN AT END OF PIER CAP

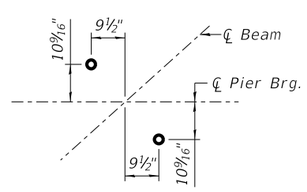

ANCHOR BOLT LAYOUT

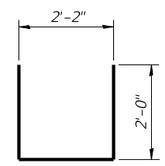

BAR s12(E)

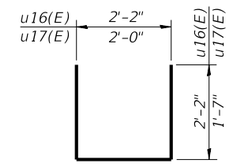

BARS u16(E) & u17(E)

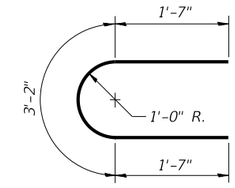

BARS u18(E)

NOTES:

Cast steps monolithically with cap.
Space cap reinforcement to miss anchor bolts.
For Bearing Details, See Structural Sheet 26 of 63.

WILLETT HOFMANN & ASSOCIATES INC
ENGINEERING ARCHITECTURE LAND SURVEYING
809 EAST 2ND STREET, DIXON, IL 61021-0367
T: 815-284-3381 DESIGN FIRM: #184-000918

DESIGNED - EEL	REVISED -		
CHECKED - PLP	REVISED -		
DRAWN - FDL	REVISED -		
CHECKED - PLP	REVISED -		

WINNEBAGO COUNTY
F.A.P. 0412 (ALPINE RD) OVER FOREST HILLS RD
STATION 504+16.50

PIER 1 BEARING SEAT MODIFICATION DETAILS
STRUCTURE NO. 101-3068

STRUCTURAL SHEET NO. 34 OF 63 SHEETS

F.A.P. RTE.	SECTION	COUNTY	TOTAL SHEETS	SHEET NO.
412	16-00620-00-BR	WINNEBAGO	109	57
	WHA# 1017D17	CONTRACT NO. 85704		
		ILLINOIS FED. AID PROJECT 7K29(857)		

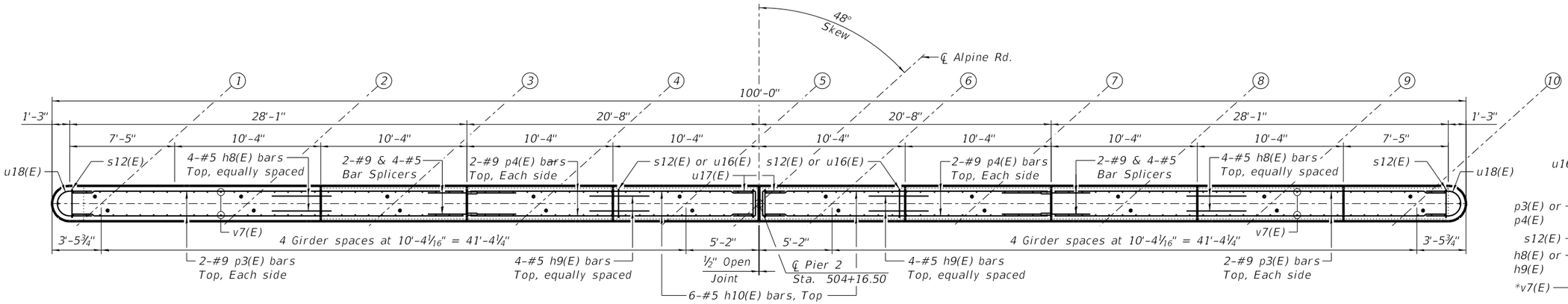

TOP PLAN

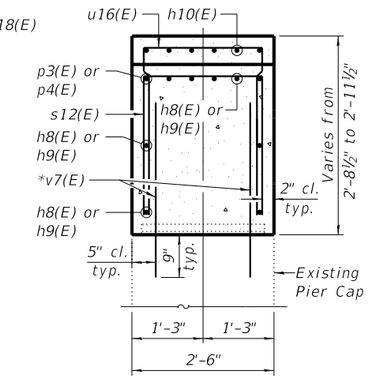

SETION A-A

*Bars shall be drilled and grouted according to Section 584 of the Standard Secifications. Cost incidental to Reinforcement Bars, Expoy Coated.

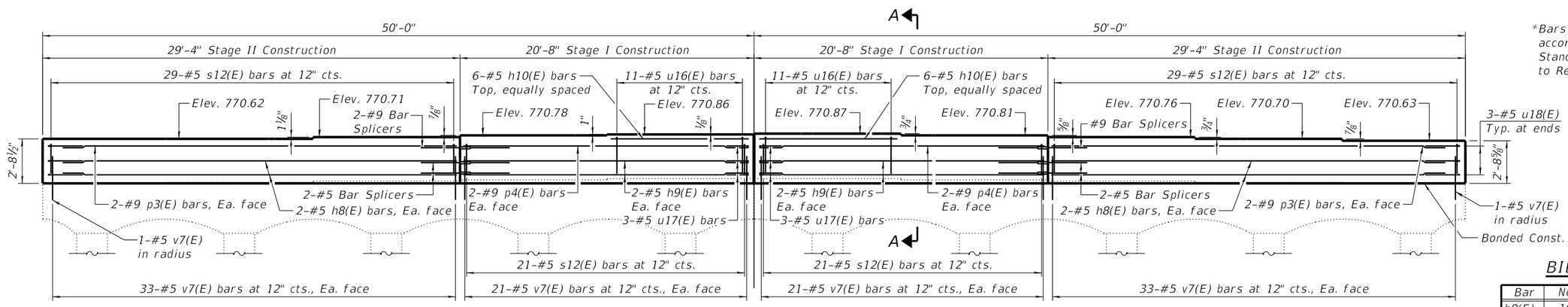

ELEVATION
(Looking North)

MIN. BAR LAP
#5 = 3'-7"
#9 = 6'-5"

BILL OF MATERIAL

Bar	No.	Size	Length	Shape
h8(E)	16	#5	27'-11"	
h9(E)	16	#5	20'-4"	
h10(E)	12	#5	10'-0"	
p3(E)	4	#9	27'-11"	
p4(E)	4	#9	20'-4"	
s12(E)	100	#5	6'-2"	
u16(E)	22	#5	6'-6"	
u17(E)	6	#5	5'-2"	
u18(E)	6	#5	6'-4"	
v7(E)	218	#5	3'-1"	
Concrete Structures			Cu. Yd.	25.6
Reinforcement Bars, Epoxy Coated			Pound	3,160
Bar Splicers			Each	20

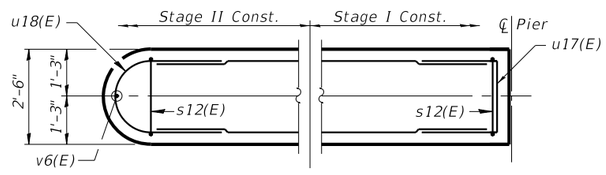

PLAN AT END OF PIER CAP

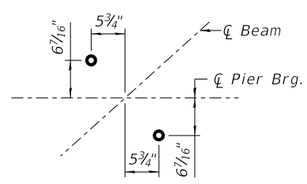

ANCHOR BOLT LAYOUT

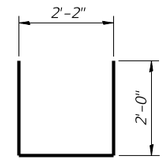

BAR s12(E)

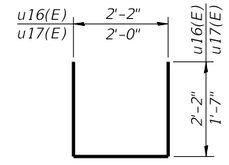

BARS u16(E) & u17(E)

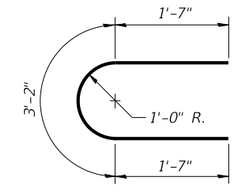

BARS u18(E)

NOTES:

Cast steps monolithically with cap.
Space cap reinforcement to miss anchor bolts.
For Bearing Details, See Structural Sheet 26 of 63.

WILLETT HOFMANN & ASSOCIATES INC
ENGINEERING ARCHITECTURE LAND SURVEYING
809 EAST 2ND STREET, DIXON, IL 61021-0367
T: 815-284-3381 DESIGN FIRM: #184-000918

DESIGNED - EEL	REVISED -		
CHECKED - PLP	REVISED -		
DRAWN - FDL	REVISED -		
CHECKED - PLP	REVISED -		

WINNEBAGO COUNTY
F.A.P. 0412 (ALPINE RD) OVER FOREST HILLS RD
STATION 504+16.50

PIER 2 BEARING SEAT MODIFICATION DETAILS
STRUCTURE NO. 101-3068
STRUCTURAL SHEET NO. 35 OF 63 SHEETS

F.A.P. RTE.	SECTION	COUNTY	TOTAL SHEETS	SHEET NO.
412	16-00620-00-BR	WINNEBAGO	109	58
	WHA# 1017D17	CONTRACT NO. 85704		
	ILLINOIS	FED. AID PROJECT 7K29(857)		

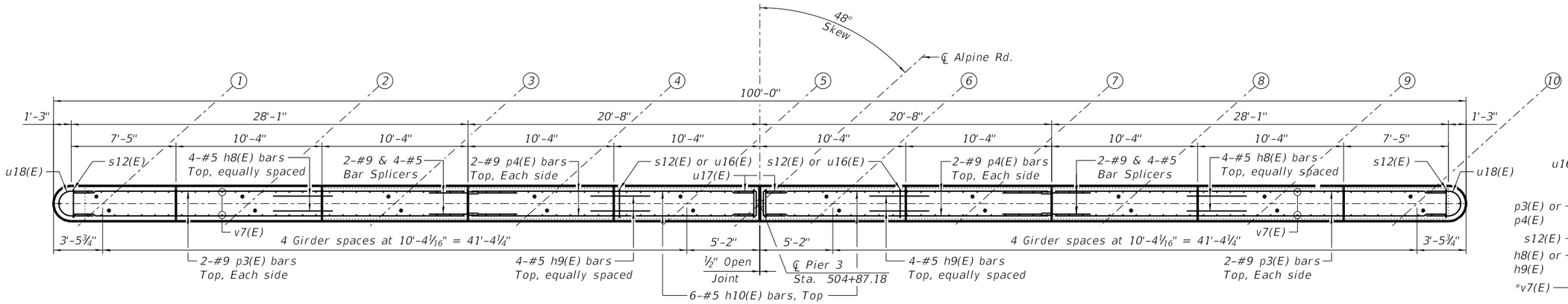

TOP PLAN

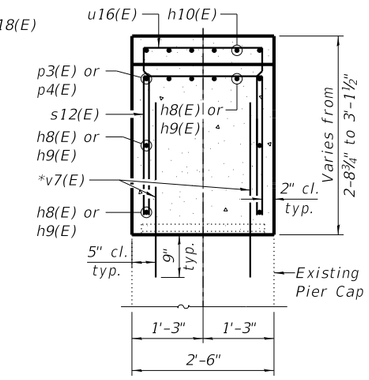

SETION A-A

*Bars shall be drilled and grouted according to Section 584 of the Standard Secifications. Cost incidental to Reinforcement Bars, Expoy Coated.

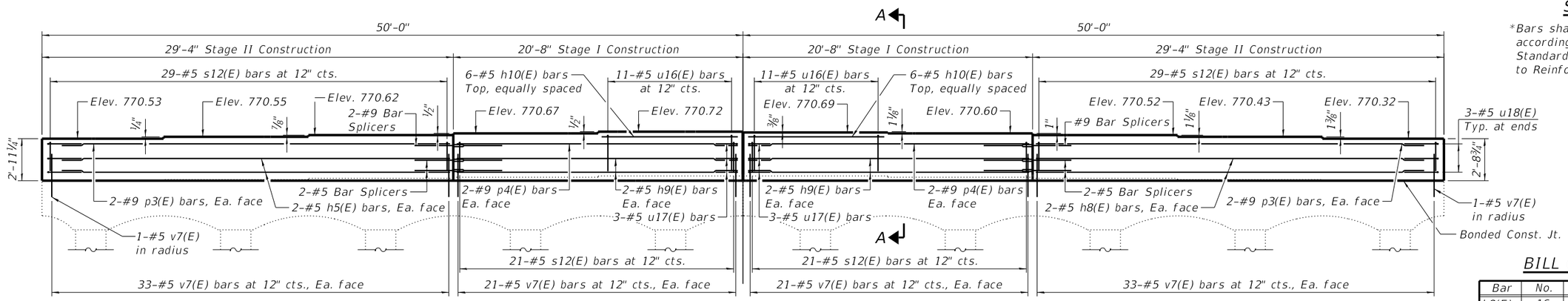

ELEVATION
(Looking North)

MIN. BAR LAP
#5 = 3'-7"
#9 = 6'-5"

BILL OF MATERIAL

Bar	No.	Size	Length	Shape
h8(E)	16	#5	27'-11"	
h9(E)	16	#5	20'-4"	
h10(E)	12	#5	10'-0"	
p3(E)	4	#9	27'-11"	
p4(E)	4	#9	20'-4"	
s12(E)	100	#5	6'-2"	
u16(E)	22	#5	6'-6"	
u17(E)	6	#5	5'-2"	
u18(E)	6	#5	6'-4"	
v7(E)	218	#5	3'-1"	
Concrete Structures			Cu. Yd.	25.4
Reinforcement Bars, Epoxy Coated			Pound	3,160
Bar Splicers			Each	20

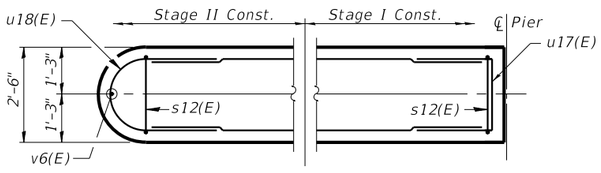

PLAN AT END OF PIER CAP

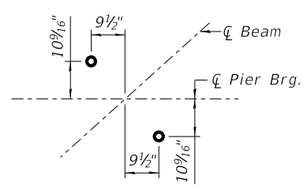

ANCHOR BOLT LAYOUT

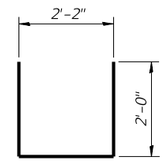

BAR s12(E)

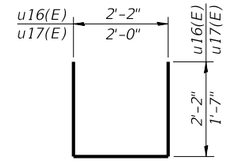

BARS u16(E) & u17(E)

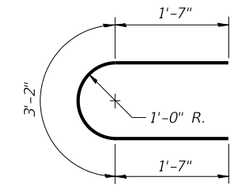

BARS u18(E)

NOTES:

Cast steps monolithically with cap.
Space cap reinforcement to miss anchor bolts.
For Bearing Details, See Structural Sheet 26 of 63.

WILLETT HOFMANN & ASSOCIATES INC
ENGINEERING ARCHITECTURE LAND SURVEYING
809 EAST 2ND STREET, DIXON, IL 61021-0367
T: 815-284-3381 DESIGN FIRM: #184-000918

DESIGNED - EEL	REVISED -		
CHECKED - PLP	REVISED -		
DRAWN - FDL	REVISED -		
CHECKED - PLP	REVISED -		

WINNEBAGO COUNTY
F.A.P. 0412 (ALPINE RD) OVER FOREST HILLS RD
STATION 504+16.50

PIER 3 BEARING SEAT MODIFICATION DETAILS
STRUCTURE NO. 101-3068
STRUCTURAL SHEET NO. 36 OF 63 SHEETS

F.A.P. RTE.	SECTION	COUNTY	TOTAL SHEETS	SHEET NO.
412	16-00620-00-BR	WINNEBAGO	109	59
	WHA# 1017D17	CONTRACT NO. 85704		
	ILLINOIS	FED. AID PROJECT 7K29(857)		

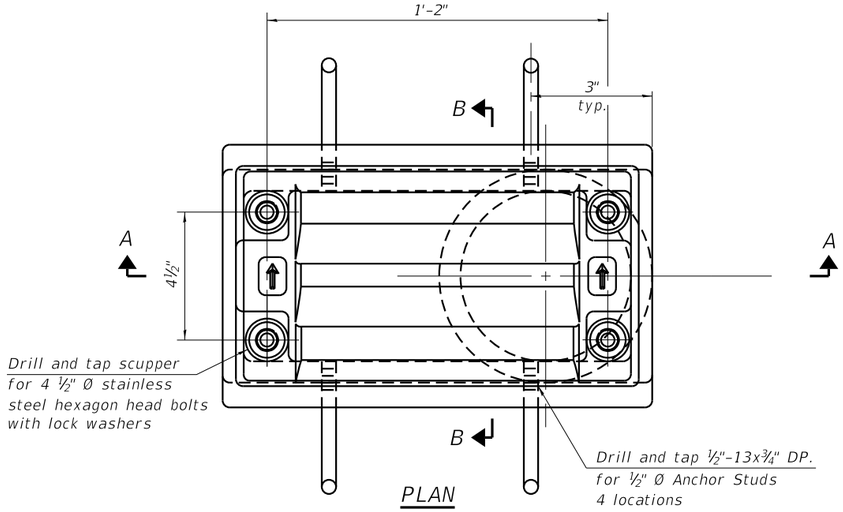

PLAN

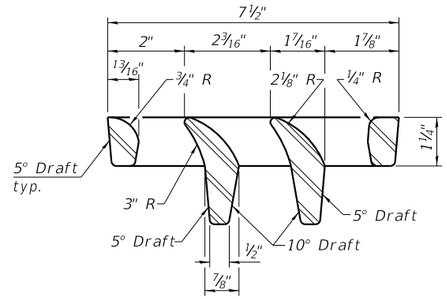

VANE GRATE DETAIL

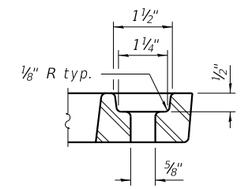

BOLT HOLE DETAIL

NOTES:

All cast iron parts shall be gray iron conforming to the requirements of AASHTO M 105, Class 35B.

Bolts, anchor studs, washers and nuts shall conform to the requirements of ASTM A 307 and shall be galvanized according to AASHTO M 232.

Downspouts located on the exterior side of a painted steel fascia beam shall be painted with the finish coat specified for the exterior side of the fascia beam.

As an alternate, bolts, anchor studs, washers and nuts may be stainless steel according to Article 1006.29(d) of the Standard Specifications.

Structural steel weldments of equal sections and of the same configuration may be substituted for the cast iron scupper frame. Fillet or full penetration welds shall be used for the weldments. Details shall be submitted to the Engineer for approval. Structural steel weldments shall not be substituted for the cast iron scupper grate. Structural steel frames and downspouts shall be galvanized according to AASHTO M111.

The Contractor shall take appropriate measures to assure that Protective Coat is not applied to the scupper.

Cost of the Grate, Frame, Downspout, Anchor Studs, Bolts, Washers and Nuts including complete installation of the scupper shall be paid for at the contract unit price each for Drainage Scupper, DS-11.

Alternate fiberglass downspout conforming to ASTM D 2996 with a short-time rupture strength hoop tensile stress of 30,000 psi min. may be used in lieu of the cast iron or steel equivalent.

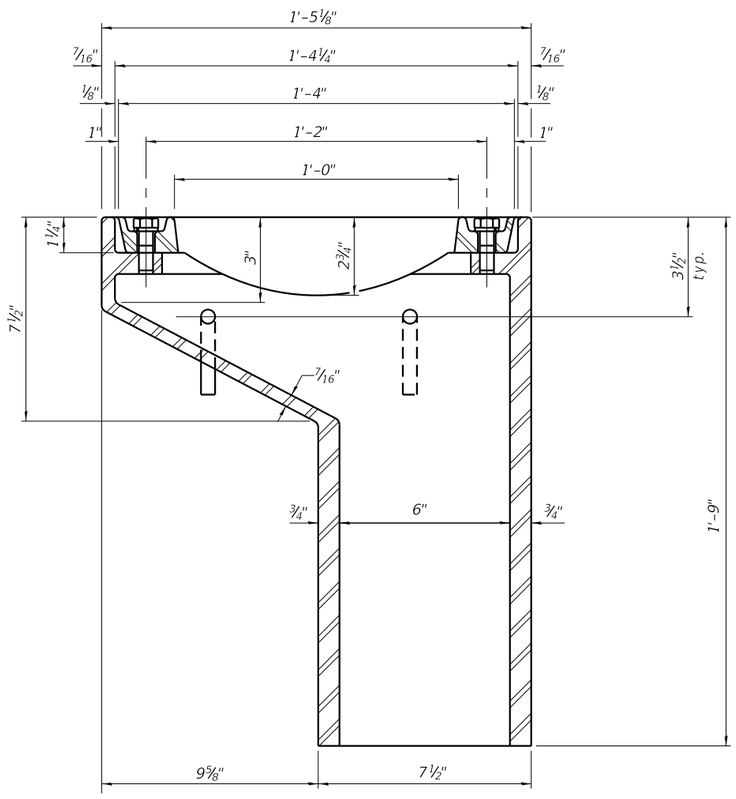

SECTION A-A

See Structural Sheet 18 of 63 for scupper location relative to parapet.

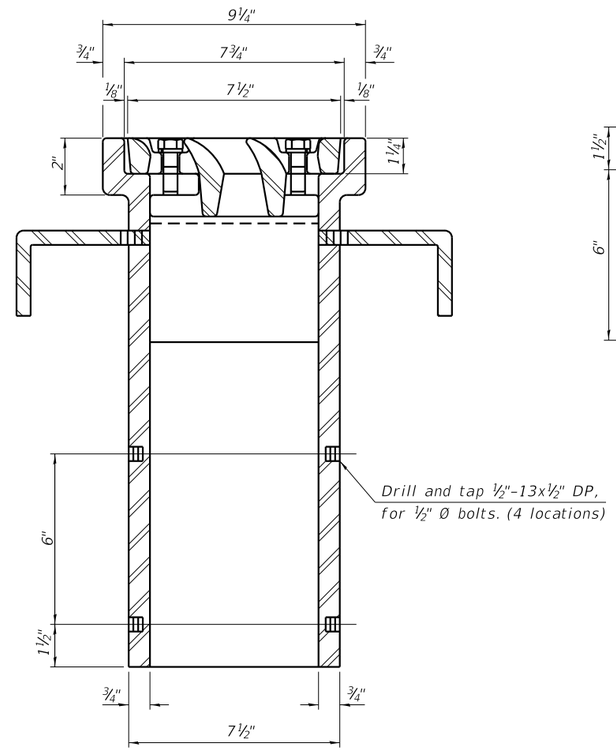

SECTION B-B

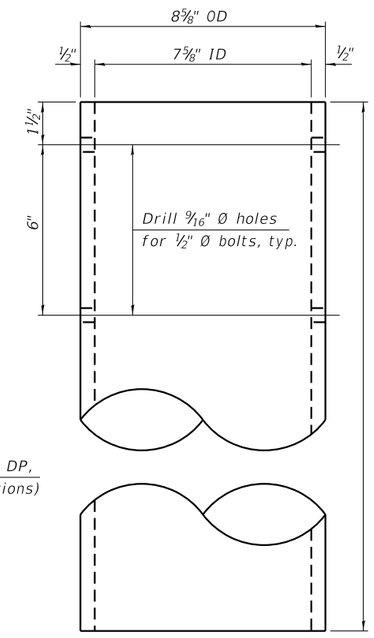

DOWNSPOUT

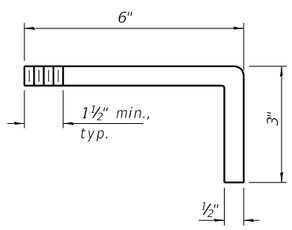

ANCHOR STUD DETAIL

BILL OF MATERIAL

ITEM	UNIT	QUANTITY
Drainage Scupper, DS-11	Each	4

WILLETT HOFMANN & ASSOCIATES INC
ENGINEERING ARCHITECTURE LAND SURVEYING
809 EAST 2ND STREET, DIXON, IL 61021-0367
T: 815-284-3381 DESIGN FIRM: #184-000918

DESIGNED -	PV	REVISED	-
CHECKED -	PLP	REVISED	-
DRAWN -	RDA	REVISED	-
CHECKED -	PLP	REVISED	-

WINNEBAGO COUNTY
F.A.P. 0412 (ALPINE RD) OVER FOREST HILLS RD
STATION 504+16.50

DRAINAGE SCUPPER, DS-11
STRUCTURE NO. 101-3068

STRUCTURAL SHEET NO. 37 OF 63 SHEETS

F.A.P. RTE.	SECTION	COUNTY	TOTAL SHEETS	SHEET NO.
412	16-00620-00-BR	WINNEBAGO	109	60
	WHA* 1017D17	CONTRACT NO. 85704		
		ILLINOIS FED. AID PROJECT 7K29(857)		

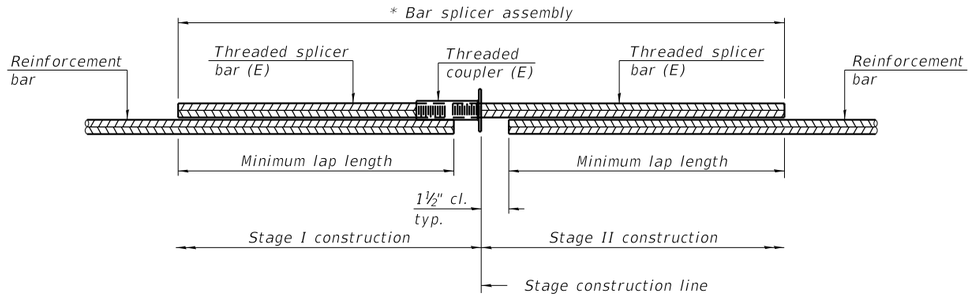

STANDARD BAR SPLICER ASSEMBLY PLAN

(All components shall be provided from one supplier)

Threaded splicer bar length = min. lap length + 1½" + thread length

* Epoxy not required on Bar Splicer Assembly components used in conjunction with black bars.

Location	Bar size	No. assemblies required	Minimum lap length
Superstructure, End to End Deck	#5	1,638	3'-6"
Diaphragm	#6	48	4'-0"
Diaphragm Corbel	#4	8	2'-8"
Approach Slab Top	#5	124	3'-6"
Approach Slab Bottom	#8	164	4'-9"
Approach Footing (Top and Bottom)	#5	160	3'-6"
Piers	#5	48	3'-6"
	#9	12	9'-2"
Abutments	#8	44	7'-2"

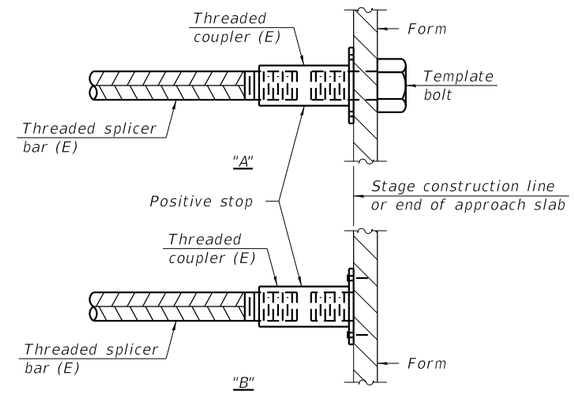

INSTALLATION AND SETTING METHODS

"A" : Set bar splicer assembly by means of a template bolt.
"B" : Set bar splicer assembly by nailing to wood forms or cementing to steel forms.
(E) : Indicates epoxy coating.

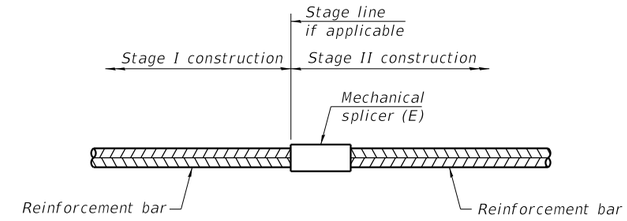

STANDARD MECHANICAL SPLICER

Location	Bar size	No. assemblies required

NOTES:

Splicer bars shall be deformed with threaded ends and have a minimum 60 ksi yield strength.

All reinforcement shall be lapped and tied to the splicer bars.

Bar splicer assemblies shall be epoxy coated according to the requirements for reinforcement bars. See Section 508 of the Standard Specifications.

See approved list of bar splicer assemblies and mechanical splicers for alternatives.

WILLETT HOFMANN & ASSOCIATES INC
ENGINEERING ARCHITECTURE LAND SURVEYING
809 EAST 2ND STREET, DIXON, IL 61021-0367
T: 815-284-3381 DESIGN FIRM: #184-000918

DESIGNED - PV	REVISED -	WINNEBAGO COUNTY F.A.P. 0412 (ALPINE RD) OVER FOREST HILLS RD STATION 504+16.50	BAR SPLICER ASSEMBLY AND MECHANICAL SPLICER DETAILS STRUCTURE NO. 101-3068
CHECKED - PLP	REVISED -		
DRAWN - RDA	REVISED -		
CHECKED - PLP	REVISED -		STRUCTURAL SHEET NO. 38 OF 63 SHEETS

F.A.P. RTE.	SECTION	COUNTY	TOTAL SHEETS	SHEET NO.
412	16-00620-00-BR	WINNEBAGO	109	61
WHA# 1017D17		CONTRACT NO. 85704		
ILLINOIS	FED. AID PROJECT 7K29(857)			

REV- 6-71

ROUTE NO.	SEC.	COUNTY	TOTAL SHEETS	SHEET NO.
CH 44	122-B-CF	WINNEBAGO	39	1

STATE OF ILLINOIS
WINNEBAGO COUNTY

PROPOSED HIGHWAY IMPROVEMENT

(ALPINE ROAD - FAS 1060) COUNTY HIGHWAY 44

SECTION 122-B-CF
SECOND REVISED

SCALES:

PLAN		1" = 50'
PROFILE, HORIZ.		1" = 50'
PROFILE, VERT.		1" = 10'
CROSS SECTIONS		
RT. 173	HORIZ.	1" = 10'
	VERT.	1" = 5'
DETOUR ROADS		1" = 5'

NET LENGTH = 249.84 FT.
= .0473 MILES

INDEX OF SHEETS

SECTION 122-B-CF ENDS
AT STA. 505+40.17

R. 2 E. OF THE 3RD. P. M.

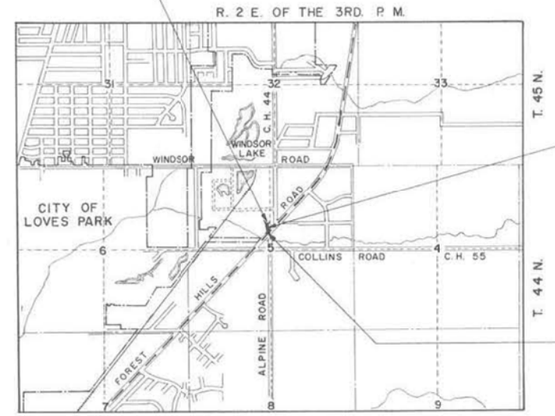

LOCATION MAP
SCALE: 1" = 2,000'±

SECTION 122-B-CF INCLUDES:
A FOUR LANE, FOUR SPAN CONTINUOUS STEEL WF BEAM GRADE SEPERATION STRUCTURE (CARRYING ALPINE ROAD - FAS 1060 - C.H. 44) OVER FOREST HILLS ROAD - F.A.S. 45 ON REINFORCED CONC. PIERS AND CONC. PILE BENT ABUTMENTS (SPANS 52'-6"; 70'-8"; 70'-8"; 50'-0") AT STA. 504+16.50 AND THE CONSTRUCTION OF EARTH EMBANKMENT CONES AND DETOUR ROADS & ACCESS ROAD

SECTION 122-B-CF BEGINS
AT STA. 502+90.33

FOR INFORMATION ONLY

GEORGE R. SCHROEDER
CO. SUPT. OF HIGHWAYS

Robert Hofmann

WILLETT HOFMANN & ASSOCIATES INC
ENGINEERING ARCHITECTURE LAND SURVEYING
809 EAST 2ND STREET, DIXON, IL 61021-0367
T: 815-284-3381 DESIGN FIRM: #184-000918

DESIGNED - PLP	REVISED -		
CHECKED - BKC	REVISED -		
DRAWN - FDL	REVISED -		
CHECKED - BKC	REVISED -		

WINNEBAGO COUNTY
F.A.P. 0412 (ALPINE RD) OVER FOREST HILLS RD
STATION 504+16.50

EXISTING 1972 PLAN SHEETS
STRUCTURE NO. 101-3068
STRUCTURAL SHEET NO. 49 OF 63 SHEETS

F.A.P. RTE.	SECTION	COUNTY	TOTAL SHEETS	SHEET NO.
412	16-00620-00-BR	WINNEBAGO	109	62
	WHA# 1017D17	CONTRACT NO. 85704		
	ILLINOIS	FED. AID PROJECT 7K29(857)		

Super Rev. Feb. 1971

ROUTE NO.	SEC.	COUNTY	TOTAL SHEETS	SHEET NO.
C.H. 44	122-B-CF	WINNEBAGO	39	13

FED. OVERSIGHT NO. | ILLINOIS | PROJECT

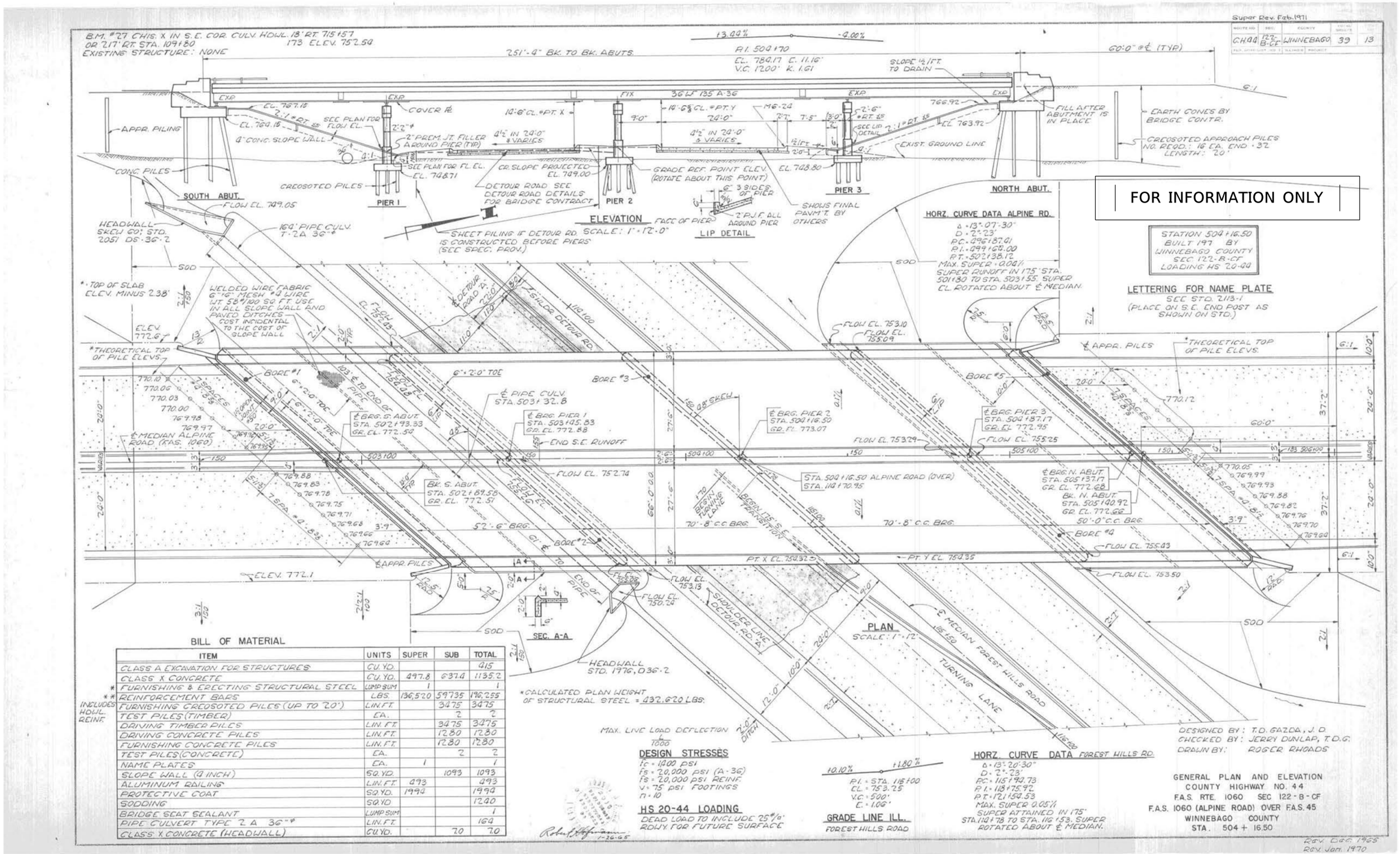

BILL OF MATERIAL

	ITEM	UNITS	SUPER	SUB	TOTAL
	CLASS A EXCAVATION FOR STRUCTURES	CU. YD.			415
	CLASS X CONCRETE	CU. YD.	497.8	637.4	1135.2
*	FURNISHING & ERECTING STRUCTURAL STEEL	LUMP SUM	1		1
**	REINFORCEMENT BARS	LBS.	136,520	59735	196,255
	FURNISHING CREOSOTED PILES (UP TO 20')	LIN. FT.		3475	3475
	TEST PILES (TIMBER)	EA.		2	2
	DRIVING TIMBER PILES	LIN. FT.		3475	3475
	DRIVING CONCRETE PILES	LIN. FT.		1280	1280
	FURNISHING CONCRETE PILES	LIN. FT.		1280	1280
	TEST PILES (CONCRETE)	EA.		2	2
	NAME PLATES	EA.	1		1
	SLOPE WALL (4 INCH)	SQ. YD.		1093	1093
	ALUMINUM RAILING	LIN. FT.	493		493
	PROTECTIVE COAT	SQ. YD.	1994		1994
	SODDING	SQ. YD.			1240
	BRIDGE SEAT SEALANT	LUMP SUM			1
	PIPE CULVERT TYPE 2 A 36"*	LIN. FT.			164
	CLASS X CONCRETE (HEADWALL)	CU. YD.		7.0	7.0

* INCLUDES HDWL. REINF.

Robert Hoffmann 7-26-65

WILLETT HOFMANN & ASSOCIATES INC
ENGINEERING ARCHITECTURE LAND SURVEYING
809 EAST 2ND STREET, DIXON, IL 61021-0367
T: 815-284-3381 DESIGN FIRM: #184-000918

DESIGNED - PLP	REVISED -		
CHECKED - BKC	REVISED -		
DRAWN - FDL	REVISED -		
CHECKED - BKC	REVISED -		

WINNEBAGO COUNTY
F.A.P. 0412 (ALPINE RD) OVER FOREST HILLS RD
STATION 504+16.50

EXISTING 1972 PLAN SHEETS
STRUCTURE NO. 101-3068
STRUCTURAL SHEET NO. 50 OF 63 SHEETS

F.A.P. RTE.	SECTION	COUNTY	TOTAL SHEETS	SHEET NO.
412	16-00620-00-BR	WINNEBAGO	109	63
	WHA* 1017D17	CONTRACT NO. 85704		
	ILLINOIS FED. AID PROJECT 7K29(857)			

BORING NO. 1

25' LT. STA. 502+65
(ALPINE ROAD)

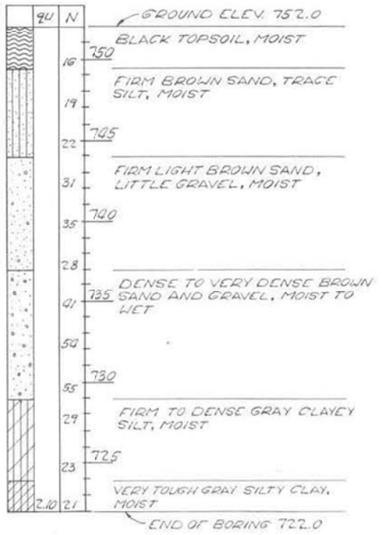

BORING NO. 2

25' RT. STA. 503+73
(ALPINE ROAD)

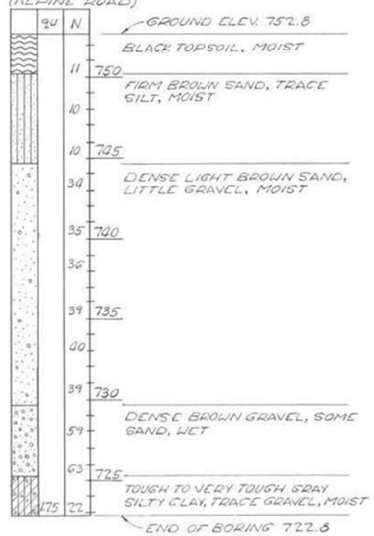

BORING NO. 3

25' LT. STA. 503+88
(ALPINE ROAD)

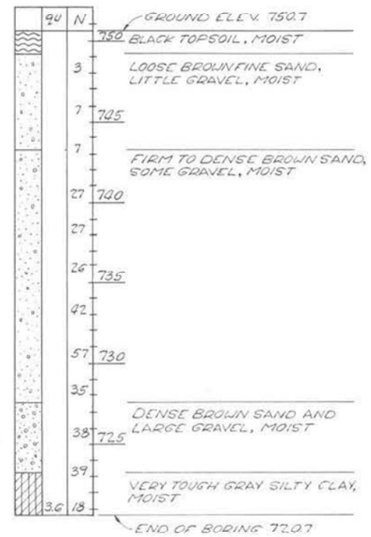

BORING NO. 4

25' RT. STA. 505+15
(ALPINE ROAD)

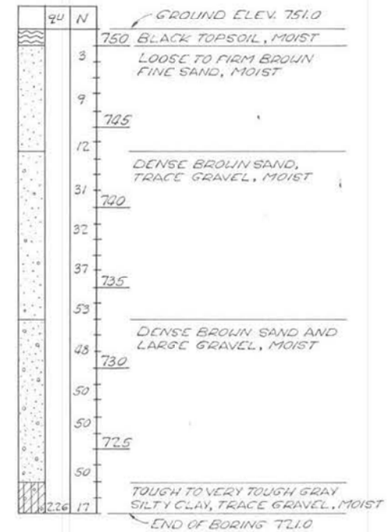

BORING NO. 5

25' LT. STA. 505+12
(ALPINE ROAD)

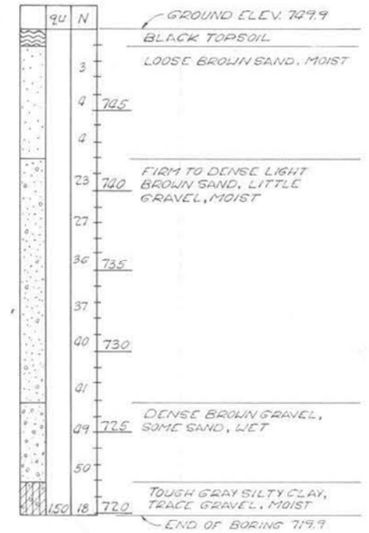

NOTE:
qu · UNCONFINED COMPRESSIVE STRENGTH TONS/FT.^{2}
N · STANDARD PENETRATION TEST · BLOWS PER FOOT TO DRIVE 2" O.D. SPLIT SPOON SAMPLER 12" WITH 140 LB. HAMMER FALLING 30"

GENERAL NOTES

ALL REINFORCEMENT BARS SHALL BE LAPPED 24 DIAMETERS UNLESS OTHERWISE SHOWN.

FASTENERS SHALL BE HIGH STRENGTH BOLTS. BOLTS 3/4" DIAMETER, OPEN HOLES 13/16" DIAMETER, UNLESS OTHERWISE NOTED.

CALCULATED WEIGHT OF STRUCTURAL STEEL = 432,630 LBS.

DIAPHRAGM CONNECTIONS MAY BE ADAPTED TO SHOP WELDING SUBJECT TO APPROVAL BY THE ENGINEER.

EXCEPT AS OTHERWISE PROVIDED, ALL STRUCTURAL STEEL SHALL BE SHOP AND FIELD PAINTED IN ACCORDANCE WITH THE BASIC LEAD SILICO-CHROMATE PAINT SYSTEM.
SEE SPECIAL PROVISIONS.

FIELD WELDING OF CONSTRUCTION ACCESSORIES WILL NOT BE PERMITTED TO THE BOTTOM FLANGE OF BEAMS OR GIRDERS NOR TO THE TOP FLANGE FOR A DISTANCE EQUAL TO ONE-FOURTH THE SPAN LENGTH EACH WAY FROM THE PIER SUPPORTS. FIELD WELDING IN OTHER AREAS WILL BE PERMITTED ONLY WHEN APPROVED BY THE ENGINEER.

ANCHOR BOLTS SHALL BE SET BEFORE BOLTING DIAPHRAGMS OVER SUPPORTS.

THE CONTRACTOR SHALL DRIVE 2 TEST PILES IN A PERMANENT LOCATION FOR THE ABUTMENTS AS SHOWN ON THE DRAWINGS, AND 2 TIMBER TEST PILES IN THE VICINITY OF PIER 2 AND PIER 3 AS DIRECTED BY THE ENGINEER BEFORE ORDERING THE REMAINDER OF THE PILING.

CONCRETE PILES AT ABUTMENTS SHALL BE DRIVEN IN HOLES PRECORED THROUGH THE EMBANKMENT IN ACCORDANCE WITH ARTICLE 513.09 (c) OF THE STANDARD SPECIFICATIONS.

CLASS A EXCAVATION FOR STRUCTURES INCLUDES EXCAVATION FOR SLOPE WALL.

THE EMBANKMENT CONFIGURATION SHOWN SHALL BE THE MINIMUM EMBANKMENT THAT MUST BE CONSTRUCTED PRIOR TO CONSTRUCTION OF THE ABUTMENTS.

THE CONCRETE RAIL SECTION ABOVE THE MANDATORY CONSTRUCTION JOINT AT THE TOP OF THE SIDEWALK SHALL BE CONSTRUCTED BY CLASS X CONCRETE, EXCEPT THE AGGREGATES SHALL CONFORM TO THE REQUIREMENTS OF HANDRAIL CONCRETE.

THE CONTRACTOR SHALL FINISH TO FINAL LINES AND SOD THOSE AREAS SO INDICATED ON THE PLANS.

BRIDGE SEAT SEALANT SHALL BE USED ON ALL ABUTMENT BRIDGE SEATS. SEE SPECIAL PROVISIONS.

FOR INFORMATION ONLY

BORINGS AND GENERAL NOTES
F.A.S. RTE. 1060 SEC. 122 - B - CF
F.A.S. 1060 (ALPINE ROAD) OVER F.A.S. 45
WINNEBAGO COUNTY
STA. 504+16.50

WILLETT HOFMANN & ASSOCIATES INC
ENGINEERING ARCHITECTURE LAND SURVEYING
809 EAST 2ND STREET, DIXON, IL 61021-0367
T: 815-284-3381 DESIGN FIRM: #184-000918

DESIGNED - PLP	REVISED -		
CHECKED - BKC	REVISED -		
DRAWN - FDL	REVISED -		
CHECKED - BKC	REVISED -		

WINNEBAGO COUNTY
F.A.P. 0412 (ALPINE RD) OVER FOREST HILLS RD
STATION 504+16.50

EXISTING 1972 PLAN SHEETS
STRUCTURE NO. 101-3068

STRUCTURAL SHEET NO. 51 OF 63 SHEETS

F.A.P. RTE.	SECTION	COUNTY	TOTAL SHEETS	SHEET NO.
412	16-00620-00-BR	WINNEBAGO	109	64
WHA# 1017D17		CONTRACT NO. 85704		
ILLINOIS	FED. AID PROJECT 7K29(857)			

Super Rev. 1971

ROUTE NO.	SEC.	COUNTY	TOTAL SHEETS	
CH 44	32 CF	WINNEBAGO	39	15

FED. ROAD DIST. NO. 1 ILLINOIS PROJECT

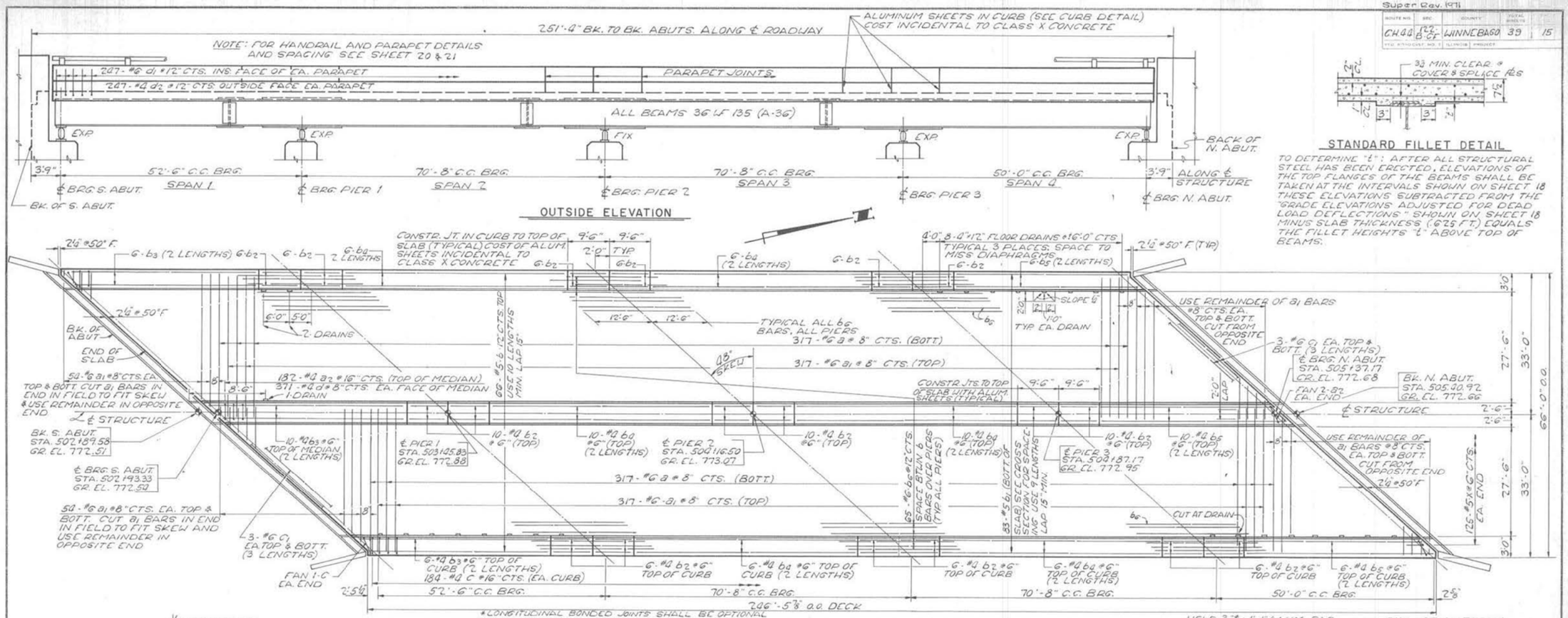

STANDARD FILLET DETAIL

TO DETERMINE "t": AFTER ALL STRUCTURAL STEEL HAS BEEN ERECTED, ELEVATIONS OF THE TOP FLANGES OF THE BEAMS SHALL BE TAKEN AT THE INTERVALS SHOWN ON SHEET 18. THESE ELEVATIONS SUBTRACTED FROM THE "GRADE ELEVATIONS ADJUSTED FOR DEAD LOAD DEFLECTIONS" SHOWN ON SHEET 18 MINUS SLAB THICKNESS (.625 FT.) EQUALS THE FILLET HEIGHTS "t" ABOVE TOP OF BEAMS.

BILL OF MATERIAL

BAR	NO.	SIZE	LENGTH	SHAPE
a	634	#6	33'-0"	
a1	850	#6	33'-6"	
a2	186	#4	5'-0"	
b	660	#5	25'-9"	
b1	747	#5	28'-6"	
b2	132	#4	9'-3"	
b3	44	#4	24'-3"	
b4	88	#4	26'-3"	
b5	44	#4	21'-9"	
b6	195	#6	25'-0"	
c	372	#4	5'-9"	
c1	36	#6	33'-9"	
d	742	#4	0'-10"	
d1	494	#6	2'-7"	
d2	494	#4	2'-7"	
x	250	#5	7'-0"	
CLASS X CONCRETE CU. YDS.				472.7
REINFORCEMENT BARS LBS.				134,510

DECK DETAILS
F.A.S. RTE. 1060 SEC. 122-B-CF
F.A.S. 1060 (ALPINE ROAD) OVER F.A.S. 45
WINNEBAGO COUNTY
STA. 504+16.50

FOR INFORMATION ONLY

WILLETT HOFMANN & ASSOCIATES INC
ENGINEERING ARCHITECTURE LAND SURVEYING
809 EAST 2ND STREET, DIXON, IL 61021-0367
T: 815-284-3381 DESIGN FIRM: #184-000918

DESIGNED - PLP	REVISED -		
CHECKED - BKC	REVISED -		
DRAWN - FDL	REVISED -		
CHECKED - BKC	REVISED -		

WINNEBAGO COUNTY
F.A.P. 0412 (ALPINE RD) OVER FOREST HILLS RD
STATION 504+16.50

EXISTING 1972 PLAN SHEETS
STRUCTURE NO. 101-3068
STRUCTURAL SHEET NO. 53 OF 63 SHEETS

F.A.P. RTE.	SECTION	COUNTY	TOTAL SHEETS	SHEET NO.
412	16-00620-00-BR	WINNEBAGO	109	65
	WHA# 1017D17	CONTRACT NO. 85704		
	ILLINOIS FED. AID PROJECT 7K29(857)			

Super Rev. Feb. 1971

ROUTE NO.	SEC.	COUNTY	TOTAL SHEETS	SHEET NO.
CH 88	122-B-CF	WINNEBAGO	39	16

FED. ROAD DIST. NO. 7 ILLINOIS PROJECT

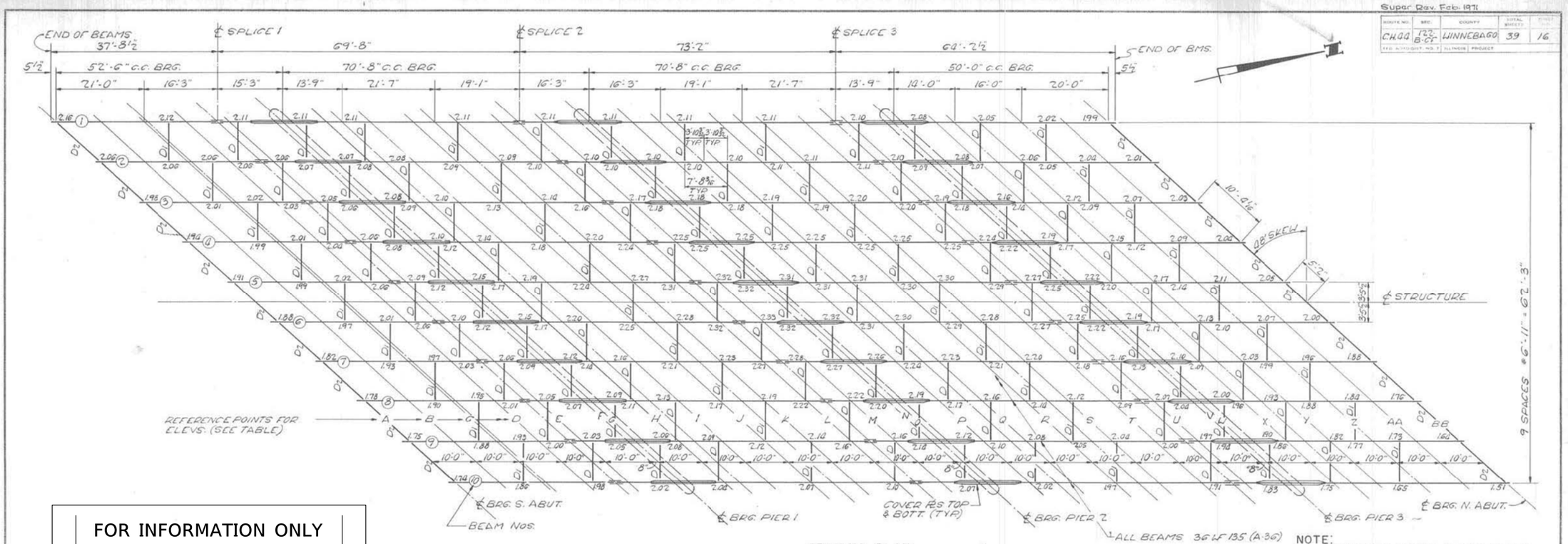

FOR INFORMATION ONLY

FRAMING PLAN

NOTE:
NUMBERS ALONG THE BEAMS AT THE ENDS OF THE DIAPHRAGMS ARE THE THEORETICAL ELEVS. OF THE TOP OF TOP FLANGES OF THE 36 LF 135 BEAMS. ADD 770.00 TO THE NUMBERS TO GET ELEVS.

ELEVATIONS OF TOP OF WF BEAMS

LOCATION	BM. 1	BM. 2	BM. 3	BM. 4	BM. 5	BM. 6	BM. 7	BM. 8	BM. 9	BM. 10
℄ BRG. S. ABUT	772.16	772.06	771.98	771.90	771.91	771.88	771.82	771.78	771.75	771.74
℄ SPLICE 1	772.11	772.06	772.04	772.05	772.08	772.08	772.05	772.04	772.02	772.01
℄ BRG. PIER 1	772.11	772.07	772.07	772.09	772.13	772.14	772.10	772.08	772.06	772.03
℄ SPLICE 2	772.11	772.10	772.17	772.25	772.32	772.34	772.28	772.23	772.17	772.11
℄ BRG. PIER 2	772.11	772.10	772.18	772.25	772.32	772.32	772.26	772.20	772.13	772.06
℄ SPLICE 3	772.11	772.11	772.20	772.25	772.29	772.26	772.18	772.09	771.99	771.90
℄ BRG. PIER 3	772.08	772.09	772.16	772.20	772.24	772.21	772.11	772.02	771.92	771.81
℄ BRG. N. ABUT	771.99	772.01	772.03	772.04	772.05	772.00	771.88	771.76	771.64	771.51

* ELEVATIONS REFER TO TOP OF TOP FLANGES OF ACTUAL ROLLED BEAMS DOES NOT INCLUDE SPLICE PLATES OR COVER PLATES. THESE ELEVATIONS ARE THEORETICAL AND ARE TO BE USED FOR FABRICATION OF STRUCTURAL STEEL AND DO NOT INCLUDE ANY ALLOWANCE FOR DEFLECTION.

GRADE ELEVATIONS ADJUSTED FOR DEAD LOAD DEFLECTIONS

LOCATION	BM. 1	BM. 2	BM. 3	BM. 4	BM. 5	BM. 6	BM. 7	BM. 8	BM. 9	BM. 10
A	772.781	772.682	772.608	772.580	772.538	772.502	772.444	772.401	772.378	772.361
B	772.804	772.719	772.660	772.627	772.619	772.594	772.544	772.508	772.488	772.483
C	772.816	772.745	772.700	772.682	772.684	772.675	772.632	772.604	772.591	772.594
D	772.814	772.758	772.728	772.723	772.745	772.742	772.706	772.686	772.681	772.676
E	772.807	772.759	772.743	772.754	772.790	772.798	772.770	772.758	772.738	772.707
F	772.803	772.761	772.757	772.782	772.832	772.851	772.831	772.802	772.770	772.734
G	772.808	772.762	772.762	772.789	772.843	772.865	772.842	772.812	772.779	772.742
H	772.809	772.774	772.787	772.820	772.888	772.918	772.887	772.853	772.815	772.773
I	772.820	772.791	772.816	772.849	772.938	772.966	772.931	772.892	772.849	772.802
J	772.828	772.805	772.843	772.895	772.982	773.005	772.965	772.921	772.873	772.822
K	772.828	772.810	772.861	772.929	773.011	773.030	772.985	772.936	772.883	772.827
L	772.820	772.808	772.872	772.949	773.026	773.040	772.990	772.937	772.880	772.819
M	772.808	772.808	772.884	772.960	773.033	773.042	772.987	772.929	772.867	772.801
N	772.803	772.823	772.893	772.970	773.038	773.042	772.983	772.920	772.853	772.783
O	772.803	772.825	772.900	772.971	773.039	773.042	772.983	772.919	772.852	772.782
P	772.809	772.850	772.920	772.988	773.049	773.049	772.984	772.916	772.844	772.769
Q	772.821	772.874	772.940	773.002	773.060	773.054	772.985	772.912	772.836	772.755
R	772.830	772.890	772.951	773.008	773.061	773.051	772.977	772.899	772.818	772.733
S	772.832	772.891	772.947	773.000	773.048	773.033	772.954	772.872	772.786	772.696
T	772.824	772.878	772.929	772.977	773.020	773.001	772.917	772.830	772.739	772.644
U	772.803	772.853	772.900	772.943	772.982	772.957	772.869	772.777	772.681	772.582
V	772.780	772.826	772.868	772.906	772.940	772.910	772.817	772.721	772.620	772.516
W	772.779	772.824	772.865	772.905	772.937	772.907	772.814	772.717	772.618	772.512
X	772.760	772.801	772.837	772.870	772.899	772.865	772.767	772.665	772.559	772.450
Y	772.740	772.775	772.807	772.835	772.860	772.820	772.718	772.611	772.501	772.387
Z	772.710	772.741	772.768	772.792	772.811	772.767	772.660	772.548	772.433	772.315
AA	772.669	772.694	772.717	772.735	772.760	772.702	772.589	772.473	772.363	772.230
BB	772.616	772.637	772.654	772.668	772.678	772.675	772.508	772.387	772.262	772.134

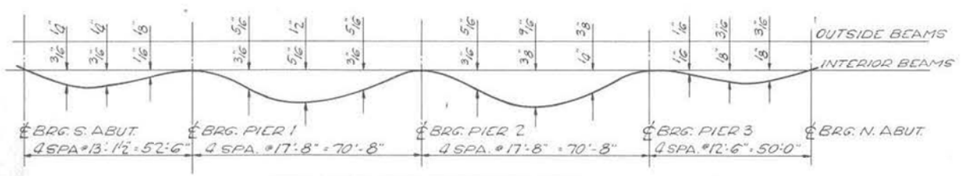

DEAD LOAD DEFLECTION DIAGRAM

WEIGHT OF STRUCTURAL STEEL NOT INCLUDED. DIAGRAM FOR REFERENCE ONLY AND IS NOT REQUIRED FOR CONSTR. PURPOSES.

STRUCTURAL STEEL
F.A.S. RTE. 1060 SEC. 122-B-CF
F.A.S. 1060 (ALPINE ROAD) OVER F.A.S. 45
WINNEBAGO COUNTY
STA. 504+16.50

WILLETT HOFMANN & ASSOCIATES INC
ENGINEERING ARCHITECTURE LAND SURVEYING
809 EAST 2ND STREET, DIXON, IL 61021-0367
T: 815-284-3381 DESIGN FIRM: #184-000918

DESIGNED - PLP	REVISED -		
CHECKED - BKC	REVISED -		
DRAWN - FDL	REVISED -		
CHECKED - BKC	REVISED -		

WINNEBAGO COUNTY
F.A.P. 0412 (ALPINE RD) OVER FOREST HILLS RD
STATION 504+16.50

EXISTING 1972 PLAN SHEETS
STRUCTURE NO. 101-3068
STRUCTURAL SHEET NO. 54 OF 63 SHEETS

F.A.P. RTE.	SECTION	COUNTY	TOTAL SHEETS	SHEET NO.
412	16-00620-00-BR	WINNEBAGO	109	66
	WHA* 1017D17	CONTRACT NO. 85704		
	ILLINOIS FED. AID PROJECT 7K29(857)			

Super Rev. Feb 1971

ROUTE NO.	SEC.	COUNTY	TOTAL SHEETS	SHEET NO.
C.H. 48	B.122-CF	WINNEBAGO	39	17

FOR INFORMATION ONLY

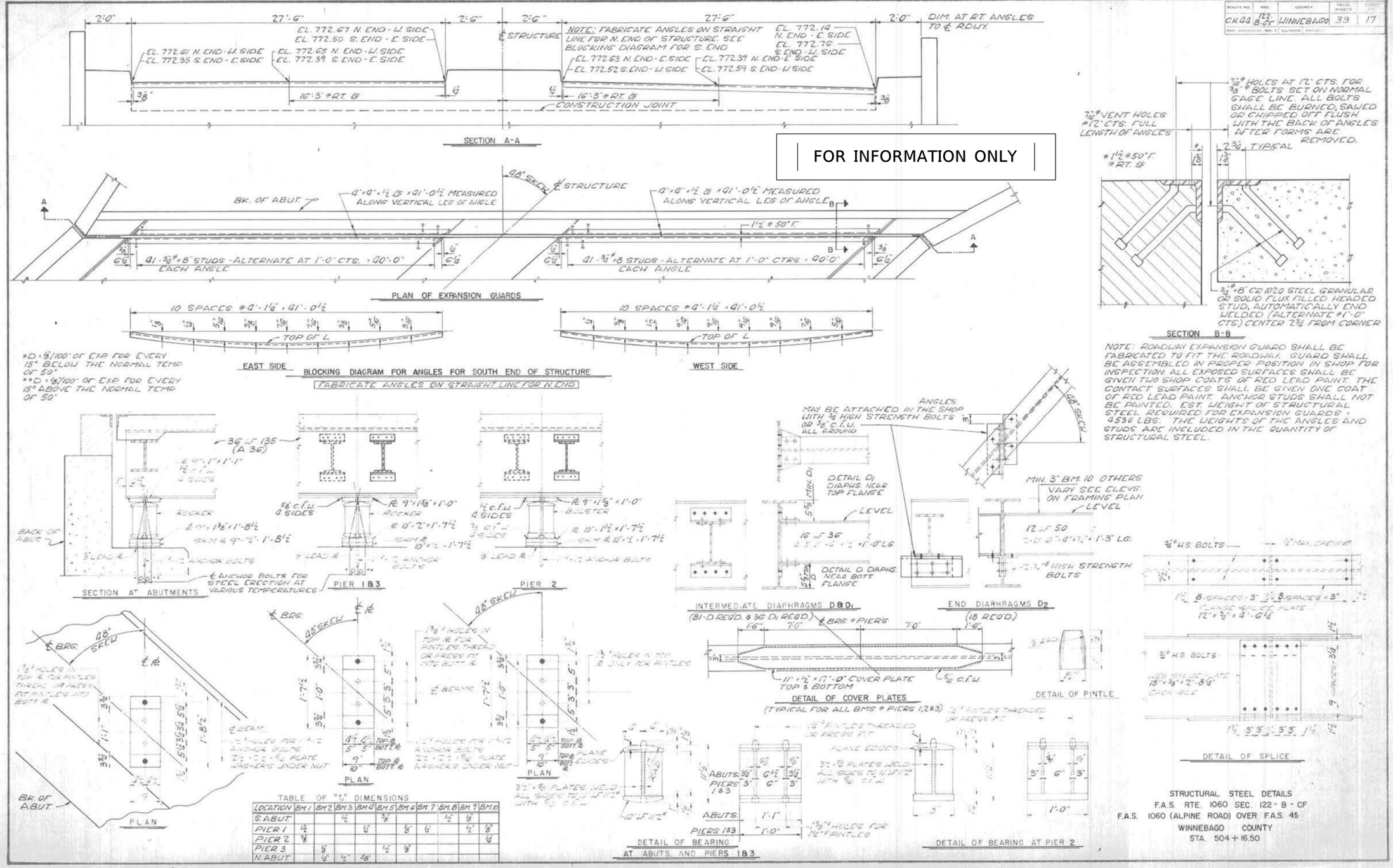

TABLE OF "t" DIMENSIONS

LOCATION	BM 1	BM 2	BM 3	BM 4	BM 5	BM 6	BM 7	BM 8	BM 9	BM 10
S. ABUT.			1/2		5/8			1/2	1/8	
PIER 1	1/2			1/4		1/8	1/4		1/2	1/8
PIER 2	7/8									1/4
PIER 3		1/8			1/2	1/8				
N. ABUT.		1/4	1/2	3/8						

WILLETT HOFMANN & ASSOCIATES INC
ENGINEERING ARCHITECTURE LAND SURVEYING
809 EAST 2ND STREET, DIXON, IL 61021-0367
T: 815-284-3381 DESIGN FIRM: #184-000918

DESIGNED - PLP	REVISED -		
CHECKED - BKC	REVISED -		
DRAWN - FDL	REVISED -		
CHECKED - BKC	REVISED -		

WINNEBAGO COUNTY
F.A.P. 0412 (ALPINE RD) OVER FOREST HILLS RD
STATION 504+16.50

EXISTING 1972 PLAN SHEETS
STRUCTURE NO. 101-3068
STRUCTURAL SHEET NO. 55 OF 63 SHEETS

F.A.P. RTE.	SECTION	COUNTY	TOTAL SHEETS	SHEET NO.
412	16-00620-00-BR	WINNEBAGO	109	67
	WHA# 1017D17	CONTRACT NO. 85704		
	ILLINOIS FED. AID PROJECT 7K29(857)			

STRUCTURAL STEEL DETAILS
F.A.S. RTE. 1060 SEC. 122-B-CF
F.A.S. 1060 (ALPINE ROAD) OVER F.A.S. 45
WINNEBAGO COUNTY
STA. 504+16.50

ROUTE NO.	SECTION	COUNTY	TOTAL SHEETS	SHEET NO.
CH 44	122 B-CF	WINNEBAGO	39	18

FOR INFORMATION ONLY

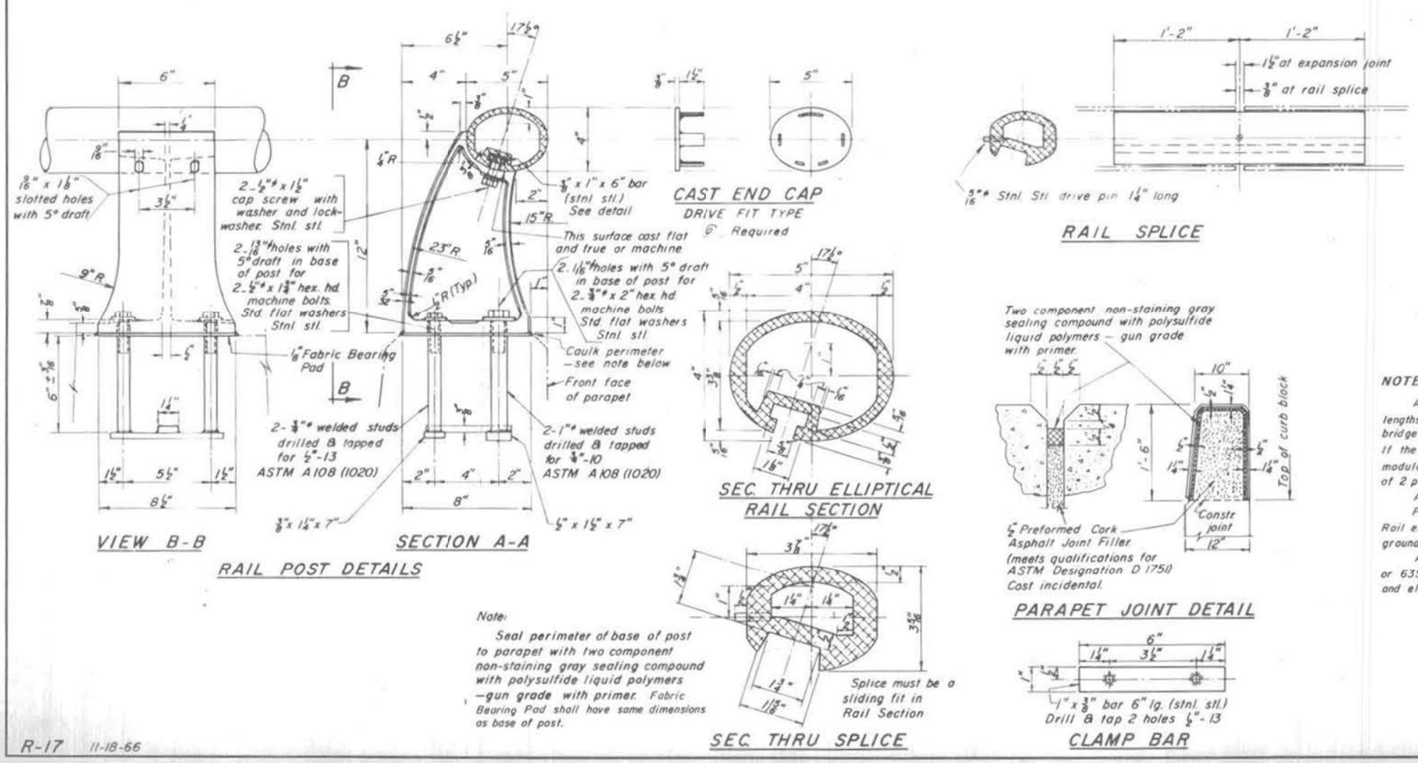

R-17 11-18-66

NOTES:

All Aluminum Alloy Extruded Rail shall be supplied in modular lengths of 30 feet, except at the end of bridge or over open joints in bridge deck where the rail shall be attached to a minimum of 2 posts. If the rail is on a horizontal curve of 2300 foot radius or less, the modular lengths may be reduced but shall be attached to a minimum of 2 posts.

All joints in rail shall be spliced per detail.

Provide 1-⅛" and 2-1/16" Aluminum Shims for 25% of the Posts. Rail element shall be parallel to Grade - high spots shall be ground and low spots shimmed.

Aluminum alloy rail shall conform to ASTM B221 alloy 6061-T6 or 6351-T5 with minimum yield 35 ksi, minimum tensile 38 ksi, and elongation of 10% in 2 inches.

PARAPETS & RAILS
BILL OF MATERIAL

Bar	No.	Size	Length	Shape
C1	12	#5	14'-9"	
C2	48	#5	9'-3"	
C3	48	#5	16'-11"	
C4	12	#5	13'-4"	
C5	12	#5	14'-2"	
C6	12	#5	13'-11"	
Class X Concrete			Cu. Yds.	25.1
Reinforcement Bars			Lbs	2010
Aluminum Railing			Lin. Ft.	493

HANDRAIL DETAILS
F.A.S. RTE. 1060 SEC. 122-B-CF
F.A.S. 1060 (ALPINE ROAD) OVER F.A.S. 45
WINNEBAGO COUNTY
STA. 504+16.50

WILLETT HOFMANN & ASSOCIATES INC
ENGINEERING ARCHITECTURE LAND SURVEYING
809 EAST 2ND STREET, DIXON, IL 61021-0367
T: 815-284-3381 DESIGN FIRM: #184-000918

DESIGNED - PLP	REVISED -		
CHECKED - BKC	REVISED -		
DRAWN - FDL	REVISED -		
CHECKED - BKC	REVISED -		

WINNEBAGO COUNTY
F.A.P. 0412 (ALPINE RD) OVER FOREST HILLS RD
STATION 504+16.50

EXISTING 1972 PLAN SHEETS
STRUCTURE NO. 101-3068
STRUCTURAL SHEET NO. 56 OF 63 SHEETS

F.A.P. RTE.	SECTION	COUNTY	TOTAL SHEETS	SHEET NO.
412	16-00620-00-BR	WINNEBAGO	109	68
	WHA# 1017D17	CONTRACT NO. 85704		
		ILLINOIS FED. AID PROJECT 7K29(857)		

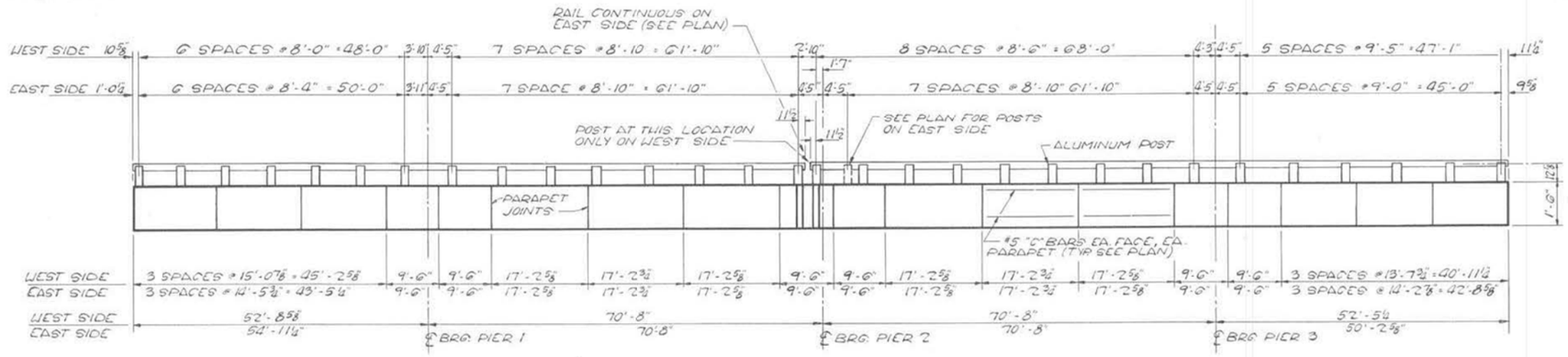

INSIDE ELEVATION OF HANDRAIL AND PARAPET

SHOWING WEST SIDE

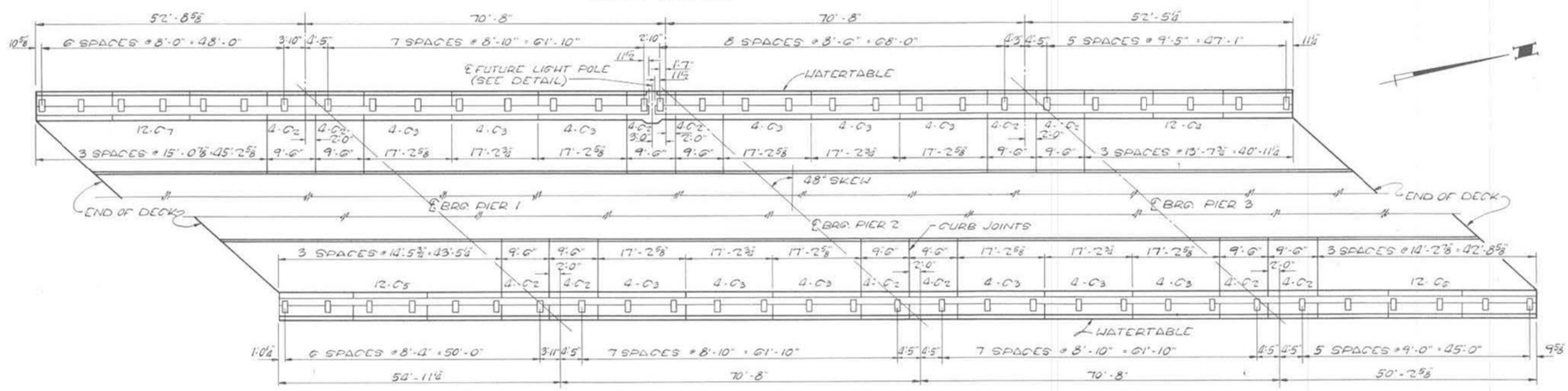

PLAN OF HANDRAIL AND PARAPET

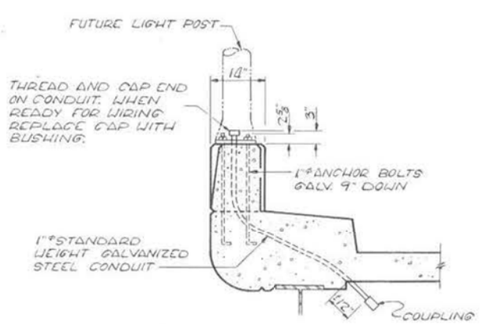

SECTION

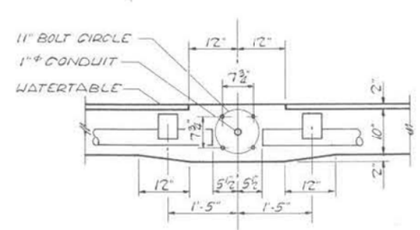

LIGHT POLE DETAIL

FOR INFORMATION ONLY

HANDRAIL AND PARAPET SPACING
F.A.S. RTE. 1060 SEC. 122-B-CF
F.A.S. 1060 (ALPINE ROAD) OVER F.A.S. 45
WINNEBAGO COUNTY
STA. 504+16.50

WILLETT HOFMANN & ASSOCIATES INC ENGINEERING ARCHITECTURE LAND SURVEYING 809 EAST 2ND STREET, DIXON, IL 61021-0367 T: 815-284-3381 DESIGN FIRM: #184-000918	DESIGNED - PLP CHECKED - BKC DRAWN - FDL CHECKED - BKC	REVISED - REVISED - REVISED - REVISED -	**WINNEBAGO COUNTY** **F.A.P. 0412 (ALPINE RD) OVER FOREST HILLS RD** **STATION 504+16.50**

EXISTING 1972 PLAN SHEETS
STRUCTURE NO. 101-3068
STRUCTURAL SHEET NO. 57 OF 63 SHEETS

F.A.P. RTE.	SECTION	COUNTY	TOTAL SHEETS	SHEET NO.
412	16-00620-00-BR	WINNEBAGO	109	69
	WHA# 1017D17	CONTRACT NO. 85704		
	ILLINOIS FED. AID PROJECT 7K29(857)			

Super Rev. Feb 1971

ROUTE NO.	SEC.	COUNTY	TOTAL SHEETS	SHEET NO.
CH 90	122-B-CF	WINNEBAGO	39	20

FED. ROAD DIST. NO. 7 ILLINOIS PROJECT

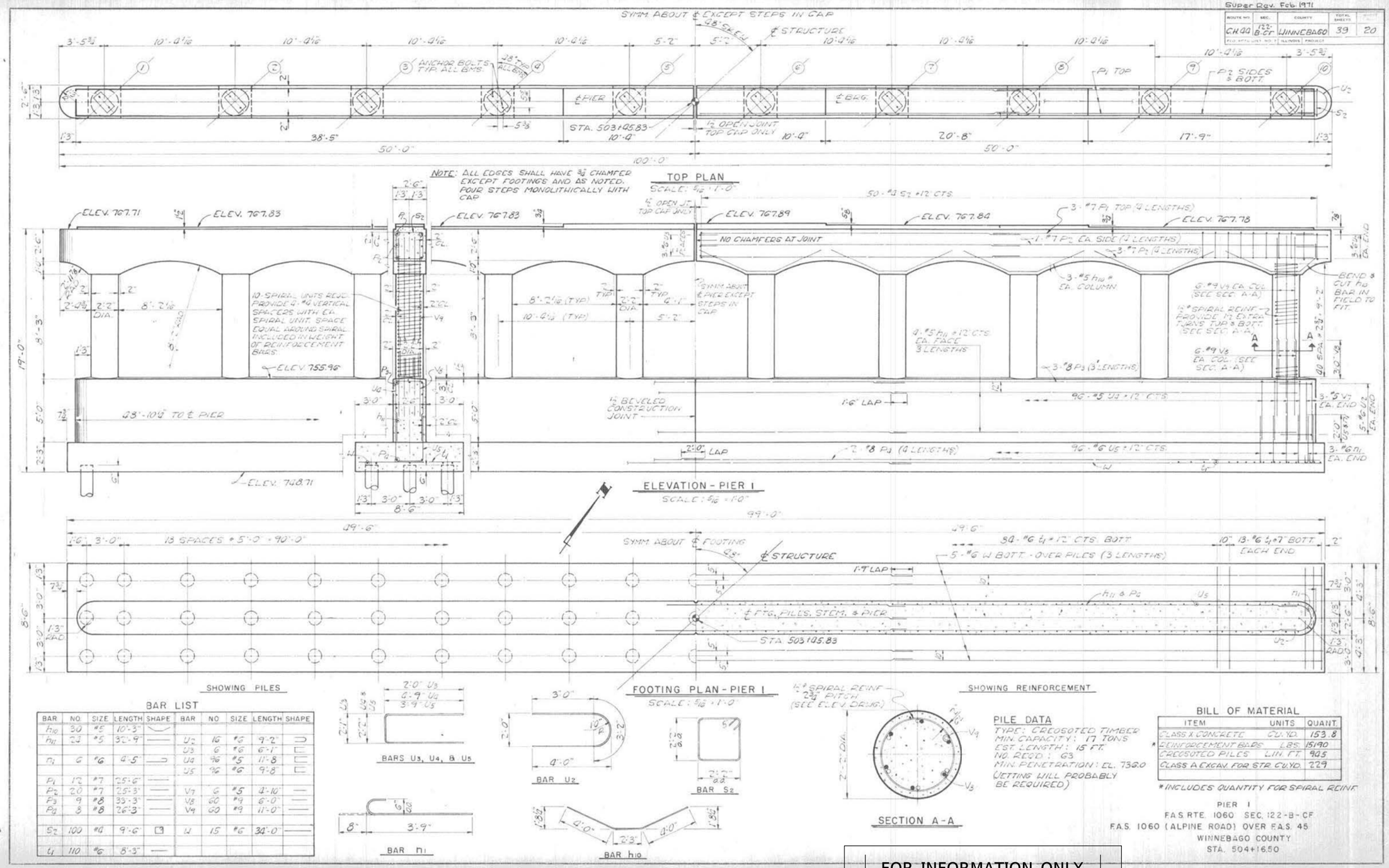

BAR LIST

BAR	NO.	SIZE	LENGTH	SHAPE	BAR	NO.	SIZE	LENGTH	SHAPE
h_{10}	30	#5	10'-3"						
h_{11}	23	#5	32'-9"		U_2	16	#6	9'-2"	
					U_3	6	#6	6'-1"	
n_1	6	#6	4'-5"		U_4	96	#5	11'-8"	
					U_5	96	#6	9'-8"	
P_1	12	#7	25'-6"						
P_2	20	#7	25'-3"		V_7	6	#5	4'-10"	
P_3	9	#8	35'-3"		V_8	60	#9	6'-0"	
P_4	3	#8	26'-3"		V_9	60	#9	11'-0"	
S_2	100	#6	9'-6"		W	15	#6	34'-0"	
U_1	110	#6	8'-3"						

PILE DATA

TYPE: CREOSOTED TIMBER
MIN. CAPACITY: 17 TONS
EST. LENGTH: 15 FT.
NO. REQD.: 63
MIN. PENETRATION: EL. 732.0
(JETTING WILL PROBABLY BE REQUIRED)

BILL OF MATERIAL

ITEM	UNITS	QUANT.
CLASS X CONCRETE	CU. YD.	153.8
* REINFORCEMENT BARS	LBS.	15190
CREOSOTED PILES	LIN. FT.	905
CLASS A EXCAV. FOR STR.	CU. YD.	229

* INCLUDES QUANTITY FOR SPIRAL REINF.

PIER 1
F.A.S. RTE. 1060 SEC. 122-B-CF
F.A.S. 1060 (ALPINE ROAD) OVER F.A.S. 45
WINNEBAGO COUNTY
STA. 504+16.50

FOR INFORMATION ONLY

WILLETT HOFMANN & ASSOCIATES INC
ENGINEERING ARCHITECTURE LAND SURVEYING
809 EAST 2ND STREET, DIXON, IL 61021-0367
T: 815-284-3381 DESIGN FIRM: #184-000918

DESIGNED - PLP	REVISED -		
CHECKED - BKC	REVISED -		
DRAWN - FDL	REVISED -		
CHECKED - BKC	REVISED -		

WINNEBAGO COUNTY
F.A.P. 0412 (ALPINE RD) OVER FOREST HILLS RD
STATION 504+16.50

EXISTING 1972 PLAN SHEETS
STRUCTURE NO. 101-3068

STRUCTURAL SHEET NO. 58 OF 63 SHEETS

F.A.P. RTE.	SECTION	COUNTY	TOTAL SHEETS	SHEET NO.
412	16-00620-00-BR	WINNEBAGO	109	70
	WHA* 1017D17	CONTRACT NO. 85704		
		ILLINOIS FED. AID PROJECT 7K29(857)		

Super Rev. Feb. 1971

ROUTE NO.	SEC.	COUNTY	TOTAL SHEETS	SHEET NO.
C.H. 44	122-B-CF	WINNEBAGO	39	21
F.A.P. ROAD DIST. NO. 3	ILLINOIS	PROJECT		

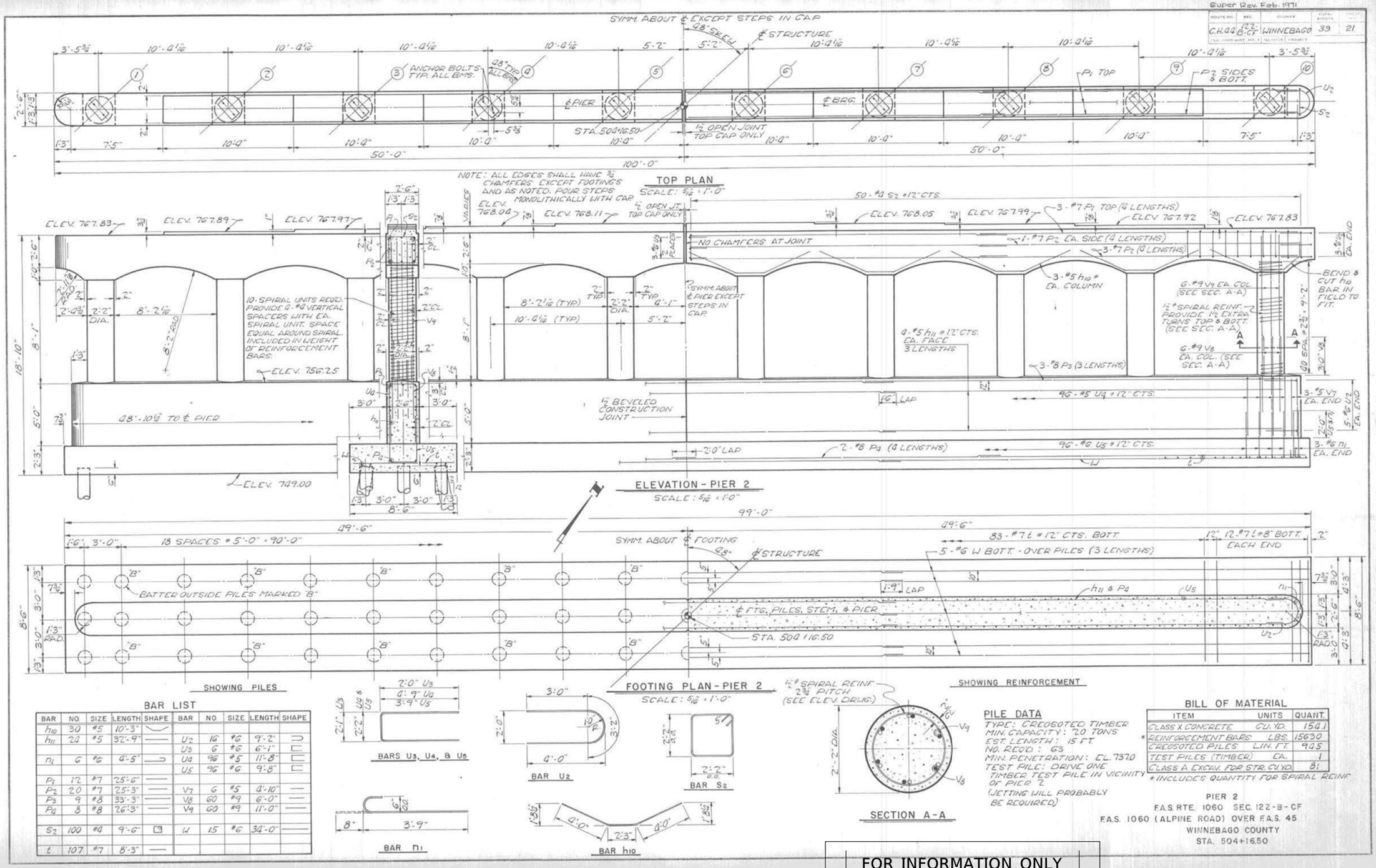

BAR LIST

BAR	NO.	SIZE	LENGTH	SHAPE	BAR	NO	SIZE	LENGTH	SHAPE
h10	30	#5	10'-3"						
h11	24	#5	32'-9"		U2	16	#6	9'-2"	
					U3	6	#6	6'-1"	
n1	6	#6	4'-5"		U4	96	#5	11'-8"	
					U5	96	#6	9'-8"	
P1	12	#7	25'-6"						
P2	20	#7	25'-3"		V7	6	#5	4'-10"	
P3	9	#8	33'-3"		V8	60	#9	6'-0"	
P4	8	#8	26'-3"		V9	60	#9	11'-0"	
S2	100	#4	9'-6"		W	15	#6	34'-0"	
L	107	#7	8'-3"						

PILE DATA

TYPE: CREOSOTED TIMBER
MIN. CAPACITY: 70 TONS
EST. LENGTH: 15 FT.
NO. REQD.: 63
MIN. PENETRATION: EL. 737.0
TEST PILE: DRIVE ONE TIMBER TEST PILE IN VICINITY OF PIER 2
(JETTING WILL PROBABLY BE REQUIRED)

BILL OF MATERIAL

ITEM	UNITS	QUANT.
CLASS X CONCRETE	CU. YD.	154.1
* REINFORCEMENT BARS	LBS.	15630
CREOSOTED PILES	LIN. FT.	945
TEST PILES (TIMBER)	EA.	1
CLASS A EXCAV. FOR STR.	CU. YD.	81

* INCLUDES QUANTITY FOR SPIRAL REINF.

PIER 2
F.A.S. RTE. 1060 SEC. 122-B-CF
F.A.S. 1060 (ALPINE ROAD) OVER F.A.S. 45
WINNEBAGO COUNTY
STA. 504+16.50

FOR INFORMATION ONLY

WILLETT HOFMANN & ASSOCIATES INC
ENGINEERING ARCHITECTURE LAND SURVEYING
809 EAST 2ND STREET, DIXON, IL 61021-0367
T: 815-284-3381 DESIGN FIRM: #184-000918

DESIGNED - PLP	REVISED -		
CHECKED - BKC	REVISED -		
DRAWN - FDL	REVISED -		
CHECKED - BKC	REVISED -		

WINNEBAGO COUNTY
F.A.P. 0412 (ALPINE RD) OVER FOREST HILLS RD
STATION 504+16.50

EXISTING 1972 PLAN SHEETS
STRUCTURE NO. 101-3068
STRUCTURAL SHEET NO. 59 OF 63 SHEETS

F.A.P. RTE.	SECTION	COUNTY	TOTAL SHEETS	SHEET NO.
412	16-00620-00-BR	WINNEBAGO	109	71
	WHA* 1017D17	CONTRACT NO. 85704		
		ILLINOIS FED. AID PROJECT 7K29(857)		

Super Rev. Feb. 1971

ROUTE NO.	SEC.	COUNTY	TOTAL SHEETS	SHEET NO.
CH 44	122-B-CF	WINNEBAGO	39	22

FED. ROAD DIST. NO. 7 | ILLINOIS | PROJECT

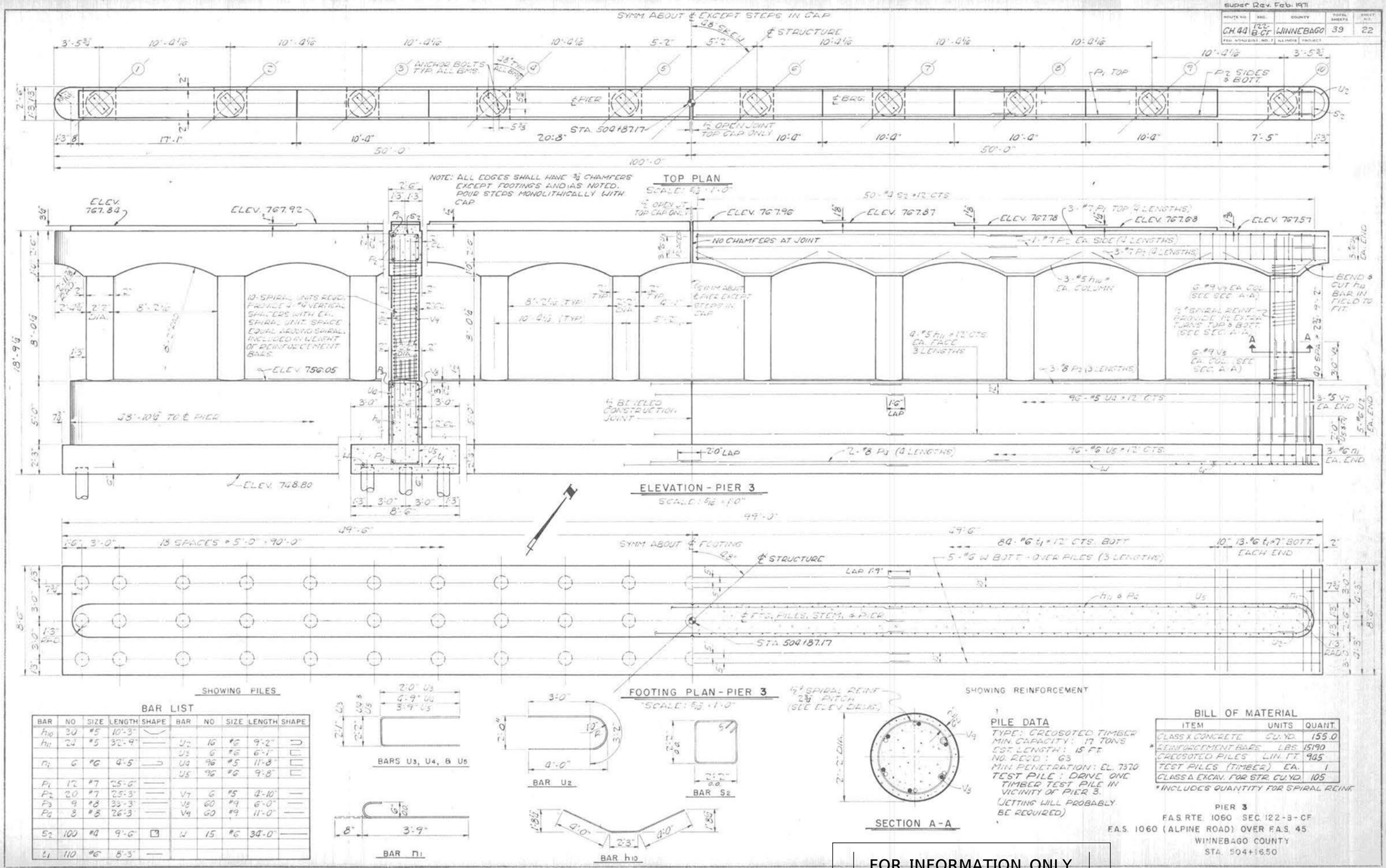

BAR LIST

BAR	NO	SIZE	LENGTH	SHAPE	BAR	NO	SIZE	LENGTH	SHAPE
h_{10}	30	#5	10'-3"						
h_{11}	22	#5	32'-9"		U_2	16	#6	9'-2"	
					U_3	6	#6	6'-1"	
n_1	6	#6	4'-5		U_4	96	#5	11'-8"	
					U_5	96	#6	9'-8"	
P_1	12	#7	25'-6"						
P_2	20	#7	25'-3"		V_7	6	#5	4'-10"	
P_3	9	#8	35'-3"		V_8	60	#9	6'-0"	
P_4	8	#8	26'-3		V_9	60	#9	11'-0"	
S_2	100	#4	9'-6"		W	15	#6	34'-0"	
t_1	110	#6	8'-3"						

BILL OF MATERIAL

ITEM	UNITS	QUANT.
CLASS X CONCRETE	CU. YD.	155.0
* REINFORCEMENT BARS	LBS.	15190
CREOSOTED PILES	LIN. FT.	945
TEST PILES (TIMBER)	EA.	1
CLASS A EXCAV. FOR STR.	CU. YD.	105

* INCLUDES QUANTITY FOR SPIRAL REINF.

FOR INFORMATION ONLY

WILLETT HOFMANN & ASSOCIATES INC
ENGINEERING ARCHITECTURE LAND SURVEYING
809 EAST 2ND STREET, DIXON, IL 61021-0367
T: 815-284-3381 DESIGN FIRM: #184-000918

DESIGNED - PLP	REVISED -		
CHECKED - BKC	REVISED -		
DRAWN - FDL	REVISED -		
CHECKED - BKC	REVISED -		

WINNEBAGO COUNTY
F.A.P. 0412 (ALPINE RD) OVER FOREST HILLS RD
STATION 504+16.50

EXISTING 1972 PLAN SHEETS
STRUCTURE NO. 101-3068

STRUCTURAL SHEET NO. 60 OF 63 SHEETS

F.A.P. RTE.	SECTION	COUNTY	TOTAL SHEETS	SHEET NO.
412	16-00620-00-BR	WINNEBAGO	109	72
	WHA* 1017D17	CONTRACT NO. 85704		
		ILLINOIS FED. AID PROJECT 7K29(857)		

Super Rev. Feb. 1971

C.H. 00 122 B-CF WINNEBAGO 39 23

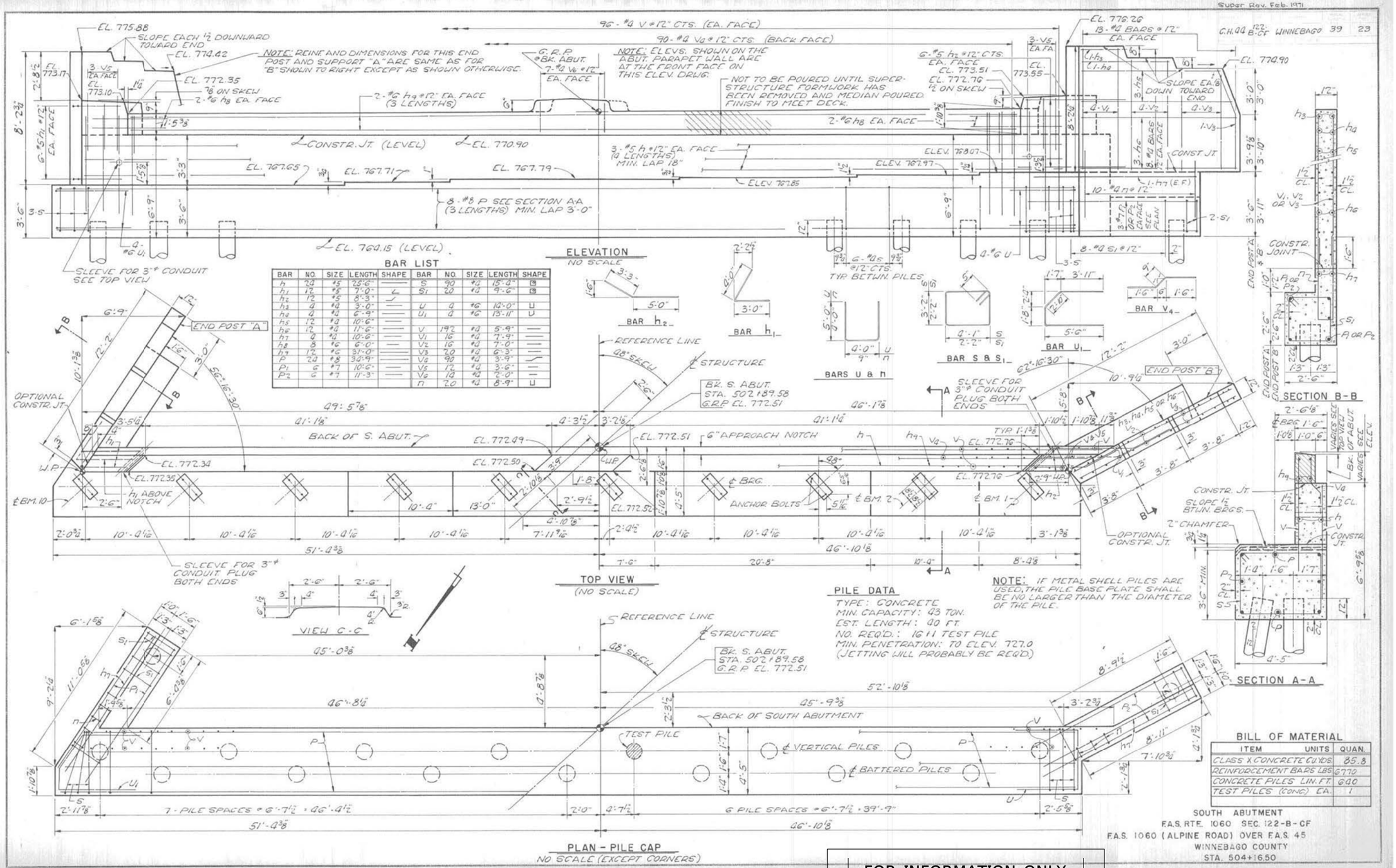

FOR INFORMATION ONLY

WILLETT HOFMANN & ASSOCIATES INC
ENGINEERING ARCHITECTURE LAND SURVEYING
809 EAST 2ND STREET, DIXON, IL 61021-0367
T: 815-284-3381 DESIGN FIRM: #184-000918

DESIGNED - PLP	REVISED -		
CHECKED - BKC	REVISED -		
DRAWN - FDL	REVISED -		
CHECKED - BKC	REVISED -		

WINNEBAGO COUNTY
F.A.P. 0412 (ALPINE RD) OVER FOREST HILLS RD
STATION 504+16.50

EXISTING 1972 PLAN SHEETS
STRUCTURE NO. 101-3068
STRUCTURAL SHEET NO. 61 OF 63 SHEETS

F.A.P. RTE.	SECTION	COUNTY	TOTAL SHEETS	SHEET NO.
412	16-00620-00-BR	WINNEBAGO	109	73
	WHA# 1017D17	CONTRACT NO. 85704		
		ILLINOIS FED. AID PROJECT 7K29(857)		

Super Rev. Feb 1971

CH. NO.	SECTION	COUNTY	TOTAL SHEETS	SHEET NO.
412	122 B-CF	WINNEBAGO	39	24

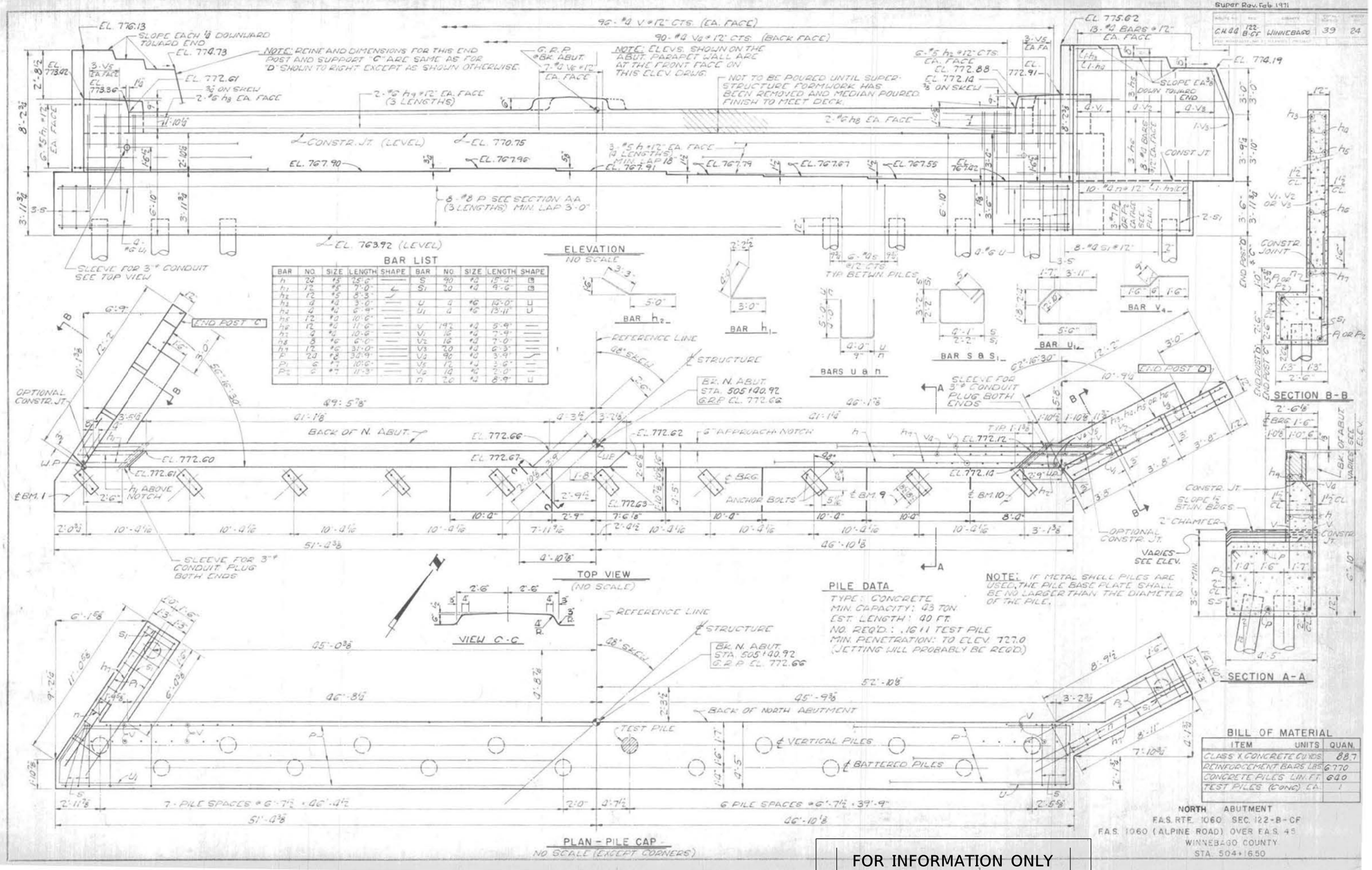

WILLETT HOFMANN & ASSOCIATES INC
ENGINEERING ARCHITECTURE LAND SURVEYING
809 EAST 2ND STREET, DIXON, IL 61021-0367
T: 815-284-3381 DESIGN FIRM: #184-000918

DESIGNED - PLP	REVISED -		
CHECKED - BKC	REVISED -		
DRAWN - FDL	REVISED -		
CHECKED - BKC	REVISED -		

WINNEBAGO COUNTY
F.A.P. 0412 (ALPINE RD) OVER FOREST HILLS RD
STATION 504+16.50

EXISTING 1972 PLAN SHEETS
STRUCTURE NO. 101-3068
STRUCTURAL SHEET NO. -- OF 63 SHEETS

F.A.P. RTE.	SECTION	COUNTY	TOTAL SHEETS	SHEET NO.
412	16-00620-00-BR	WINNEBAGO	109	74
	WHA* 1017D17	CONTRACT NO. 85704		
	ILLINOIS FED. AID PROJECT 7K29(857)			

STATE OF ILLINOIS
DEPARTMENT OF PUBLIC WORKS & BUILDINGS
DIVISION OF HIGHWAYS

ROUTE NO.	SECTION	COUNTY	TOTAL SHEETS	SHEET NO.
CH. 44	122 B-CF	WINNEBAGO	39	25
FED. ROAD DIST. NO. 9	ILLINOIS	FED. AID PROJECT-		

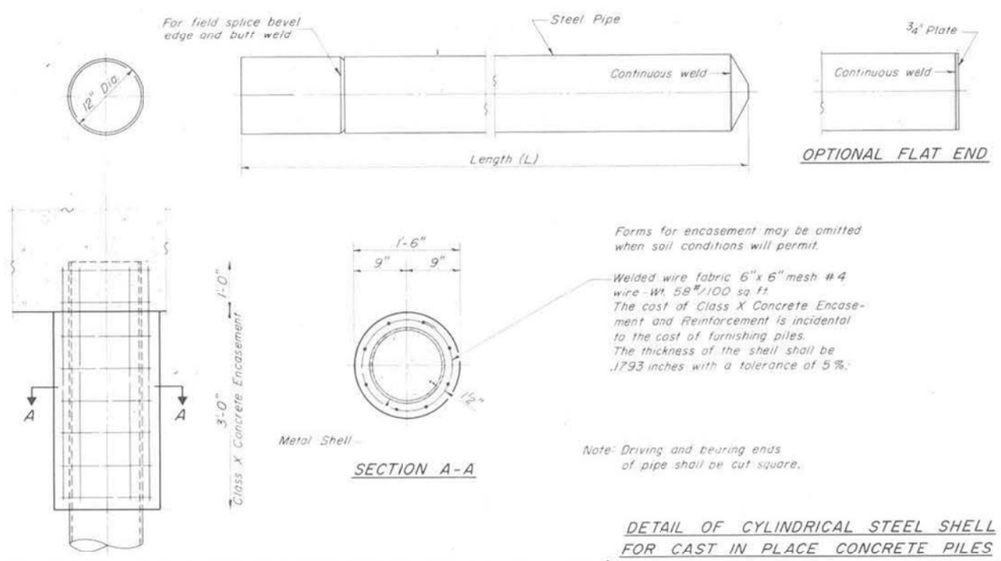

DETAIL OF CYLINDRICAL STEEL SHELL FOR CAST IN PLACE CONCRETE PILES

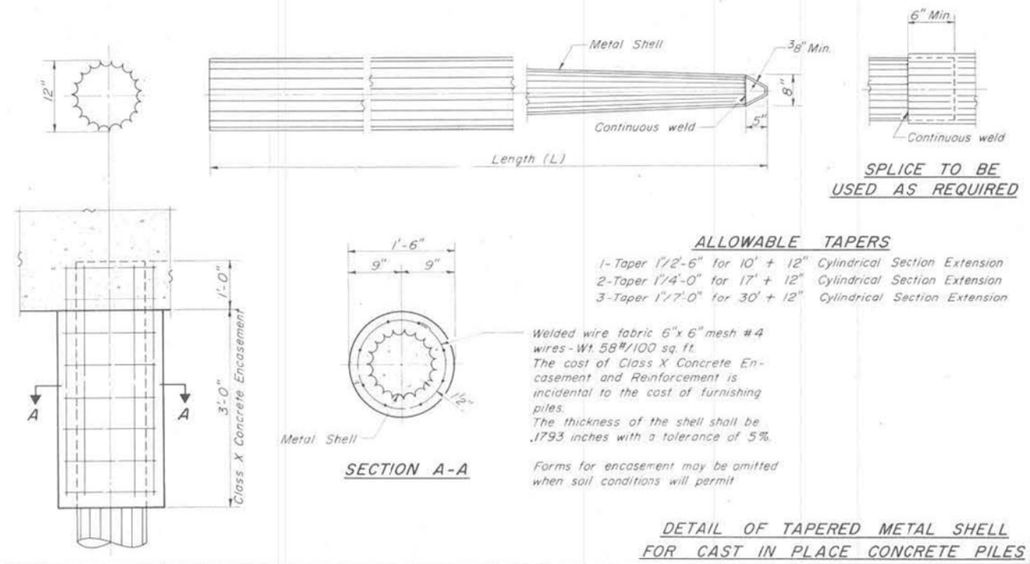

DETAIL OF TAPERED METAL SHELL FOR CAST IN PLACE CONCRETE PILES

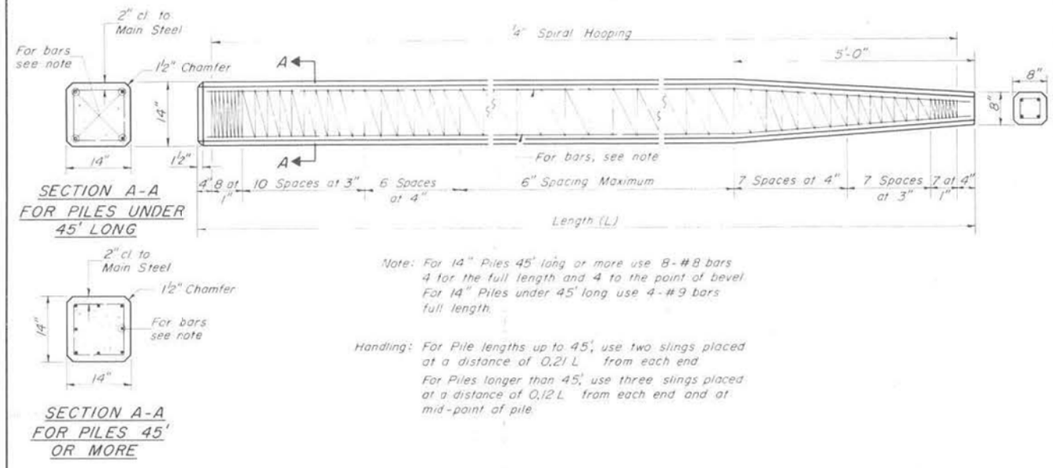

DESIGNED	EXAMINED	19
CHECKED	PASSED	
DRAWN	APPROVED	
CHECKED		

FOR INFORMATION ONLY

DETAIL OF PRECAST CONCRETE PILES

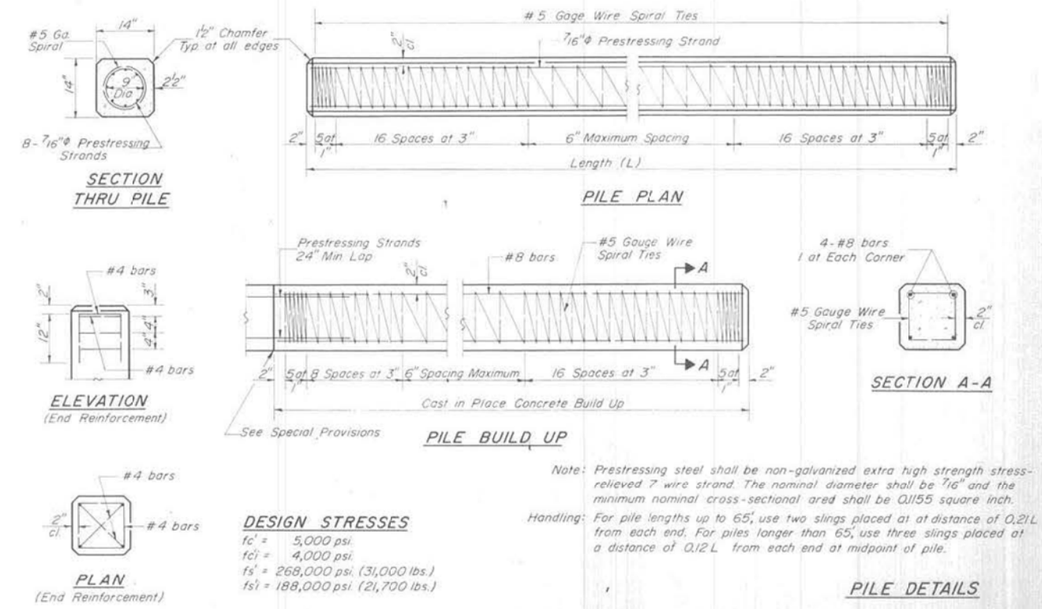

DETAIL OF PRECAST PRESTRESSED CONCRETE PILES

X-2 11-21-67

WILLETT HOFMANN & ASSOCIATES INC
ENGINEERING ARCHITECTURE LAND SURVEYING
809 EAST 2ND STREET, DIXON, IL 61021-0367
T: 815-284-3381 DESIGN FIRM: #184-000918

DESIGNED - PLP	REVISED -		
CHECKED - BKC	REVISED -		
DRAWN - FDL	REVISED -		
CHECKED - BKC	REVISED -		

WINNEBAGO COUNTY
F.A.P. 0412 (ALPINE RD) OVER FOREST HILLS RD
STATION 504+16.50

EXISTING 1972 PLAN SHEETS
STRUCTURE NO. 101-3068
STRUCTURAL SHEET NO. 62 OF 63 SHEETS

F.A.P. RTE.	SECTION	COUNTY	TOTAL SHEETS	SHEET NO.
412	16-00620-00-BR	WINNEBAGO	109	75
	WHA# 1017D17	CONTRACT NO. 85704		
		ILLINOIS FED. AID PROJECT 7K29(857)		

DETAILS OF BRIDGE APPROACHES

P.C.C. PAVEMENT (16½"-10½"-16½")
AND
P.C.C. BASE COURSE (16½"-10½"-16½")

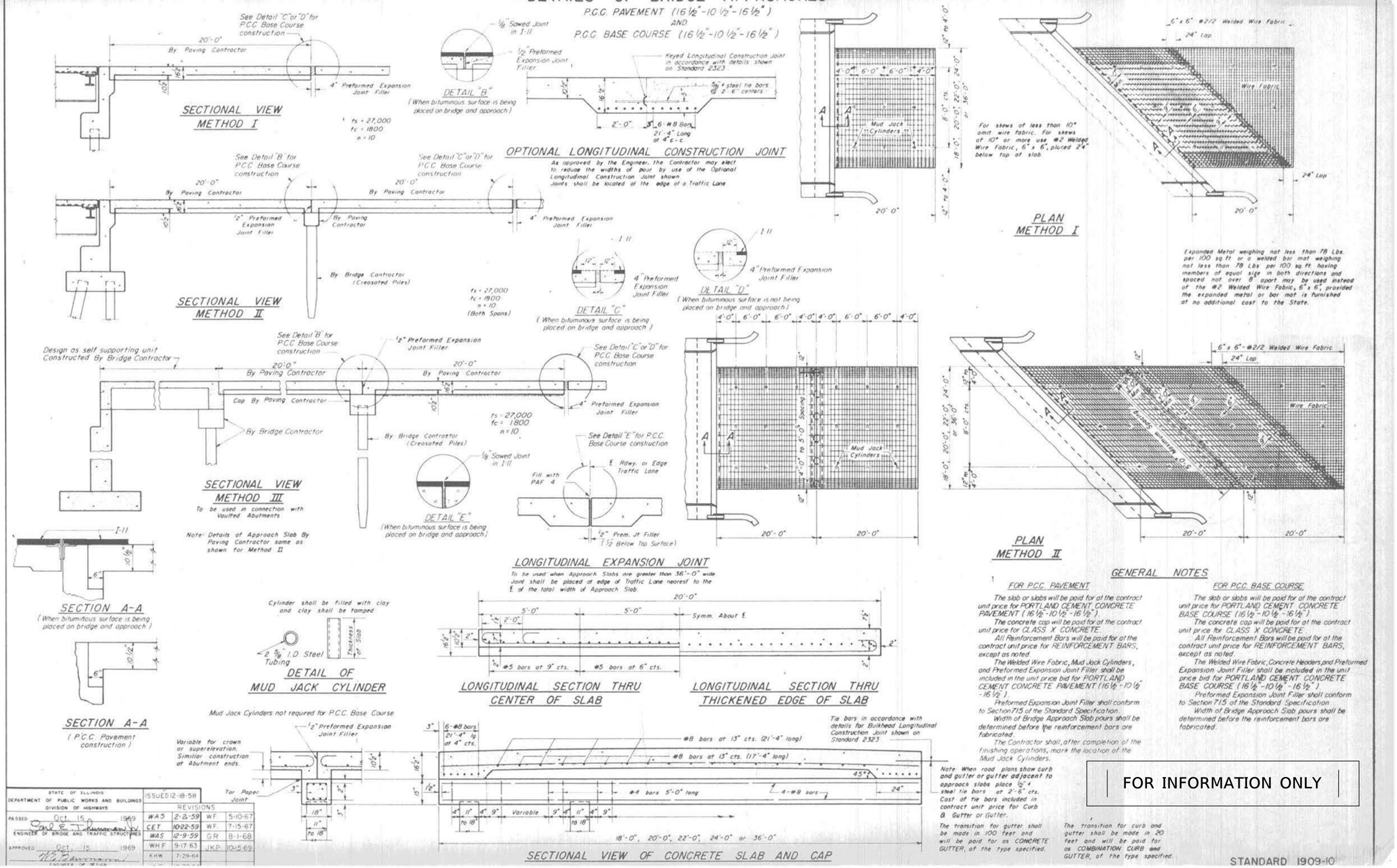

GENERAL NOTES

FOR P.C.C. PAVEMENT

The slab or slabs will be paid for at the contract unit price for PORTLAND CEMENT CONCRETE PAVEMENT (16½"-10½"-16½").

The concrete cap will be paid for at the contract unit price for CLASS X CONCRETE.

All Reinforcement Bars will be paid for at the contract unit price for REINFORCEMENT BARS, except as noted.

The Welded Wire Fabric, Mud Jack Cylinders, and Preformed Expansion Joint Filler shall be included in the unit price bid for PORTLAND CEMENT CONCRETE PAVEMENT (16½"-10½"-16½").

Preformed Expansion Joint Filler shall conform to Section 715 of the Standard Specification.

Width of Bridge Approach Slab pours shall be determined before the reinforcement bars are fabricated.

The Contractor shall, after completion of the finishing operations, mark the location of the Mud Jack Cylinders.

FOR P.C.C. BASE COURSE

The slab or slabs will be paid for at the contract unit price for PORTLAND CEMENT CONCRETE BASE COURSE (16½"-10½"-16½").

The concrete cap will be paid for at the contract unit price for CLASS X CONCRETE.

All Reinforcement Bars will be paid for at the contract unit price for REINFORCEMENT BARS, except as noted.

The Welded Wire Fabric, Concrete Headers, and Preformed Expansion Joint Filler shall be included in the unit price bid for PORTLAND CEMENT CONCRETE BASE COURSE (16½"-10½"-16½").

Preformed Expansion Joint Filler shall conform to Section 715 of the Standard Specification.

Width of Bridge Approach Slab pours shall be determined before the reinforcement bars are fabricated.

FOR INFORMATION ONLY

STATE OF ILLINOIS
DEPARTMENT OF PUBLIC WORKS AND BUILDINGS
DIVISION OF HIGHWAYS

PASSED Oct. 15, 1969
ENGINEER OF BRIDGE AND TRAFFIC STRUCTURES

APPROVED Oct. 15, 1969
ENGINEER OF DESIGN

ISSUED 12-18-58

REVISIONS			
WAS	2-2-59	WF.	5-10-67
CET	10-22-59	WF.	7-15-67
WAS	12-9-59	GR	8-1-68
WHF	9-17-63	JKP	10-15-69
KHW.	7-29-64		

STANDARD 1909-10

WILLETT HOFMANN & ASSOCIATES INC
ENGINEERING ARCHITECTURE LAND SURVEYING
809 EAST 2ND STREET, DIXON, IL 61021-0367
T: 815-284-3381 DESIGN FIRM: #184-000918

DESIGNED - PLP	REVISED -		
CHECKED - BKC	REVISED -		
DRAWN - FDL	REVISED -		
CHECKED - BKC	REVISED -		

WINNEBAGO COUNTY
F.A.P. 0412 (ALPINE RD) OVER FOREST HILLS RD
STATION 504+16.50

EXISTING 1972 PLAN SHEETS
STRUCTURE NO. 101-3068

STRUCTURAL SHEET NO. 63 OF 63 SHEETS

F.A.P. RTE.	SECTION	COUNTY	TOTAL SHEETS	SHEET NO.
412	16-00620-00-BR	WINNEBAGO	109	76
WHA# 1017D17		CONTRACT NO. 85704		
	ILLINOIS	FED. AID PROJECT 7K29(857)		

ALPINE ROAD
RECONSTRUCTION - PHASE 1

LOVES PARK, ILLINOIS
RIVERSIDE BLVD. TO RIVINGTON RD

LEGEND

- PROPERTY LINE
- EXISTING LOT LINE
- EXISTING RIGHT-OF-WAY
- EXISTING EASEMENT LINE
- PROPOSED EASEMENT LINE
- PROPOSED SETBACK LINE
- SECTION LINE
- EXISTING CONCRETE CURB AND GUTTER TO REMAIN
- EXISTING CONCRETE CURB AND GUTTER TO BE REMOVED
- PROPOSED CONCRETE CURB AND GUTTER
- EXISTING PAVEMENT, CONCRETE, OR SIDEWALK TO BE REMOVED
- TREE/SHRUB REMOVAL
- TYPE A OR TYPE B PAVEMENT
- CONCRETE PAVEMENT
- EXISTING STRIPING
- PROPOSED STRIPING
- EXISTING SIGN
- PROPOSED SIGN
- BOLLARD
- MAILBOX
- EXISTING FENCE TO REMAIN
- EXISTING FENCE TO BE REMOVED
- EXISTING SANITARY SEWER TO REMAIN
- EXISTING SANITARY SEWER STRUCTURE TO REMAIN
- PROPOSED SANITARY SEWER SERVICE
- PROPOSED SANITARY SEWER STRUCTURE
- EXISTING STORM SEWER TO REMAIN
- EXISTING STORM SEWER STRUCTURE TO REMAIN
- EXISTING STORM SEWER TO BE REMOVED
- PROPOSED STORM SEWER
- PROPOSED STORM SEWER STRUCTURE
- 8"W EXISTING WATER TO REMAIN
- EXISTING FIRE HYDRANT ASSEMBLY
- EXISTING WATER VALVE
- A/C UNIT
- 6"W PROPOSED WATER MAIN
- PROPOSED WATER VALVE
- G EXISTING GAS MAIN
- GAS METER
- G PROPOSED GAS MAIN
- O/U EXISTING OVERHEAD UTILITIES
- EXISTING UTILITY POLE
- ELECTRICAL METER
- EXISTING LIGHT POLE TO REMAIN
- U/E PROPOSED UNDERGROUND ELECTRIC SERVICE
- +TW000.00 TOP OF WALK ELEVATION
- +FG000.00 FINISHED GRADE ELEVATION
- +TP000.00 TOP OF PAVEMENT ELEVATION
- 800 PROPOSED CONTOUR LINE
- 800 EXISTING CONTOUR LINE
- GRADE BREAKLINE
- DIRECTION OF SHEET FLOW
- EVERGREEN TREE
- BUSH
- 18" REMOVE EXISTING TREE
- BENCHMARK

PROJECT LOCATION MAP

N O R T H

NO SCALE

LENGTH OF SECTION (ALPINE ROAD) = 3,675 LIN. FT. = 0.70 MILES
LENGTH OF SECTION (WINDSOR ROAD) = 725 LIN. FT. = 0.14 MILES
LENGTH OF SECTION (RAMPS) = 1,150 LIN. FT. = 0.22 MILES
DESIGN ADT: ALPINE ROAD - 22,092
DESIGN ADT: WINDSOR ROAD - 10,604

DESIGN DESIGNATION

ALPINE ROAD - PRINCIPAL ARTERIAL (45 MPH)

JURISDICTION:

CITY OF LOVES PARK

ENGINEER:

ARC DESIGN RESOURCES INC.
5291 ZENITH PARKWAY
LOVES PARK, IL 61111
VOICE: (815) 484-4300
FAX: (815) 484-4303
www.arcdesign.com
Design Firm License No. 184-001334

UTILITY OFFICIALS:

SEWER DISTRICT:
DANA CARROLL
ROCK RIVER WATER RECLAMATION DISTRICT
3501 KISHWAUKEE STREET
ROCKFORD, IL
(815) 387-7660

WATER DEPARTMENT:
CRAIG MCDONALD
CITY OF LOVES PARK
5440 WALKER AVE.
LOVES PARK, IL 61111
(815) 654-5005

TELEPHONE:
STEPHEN JONES
AT&T MIDWEST
2404 8TH AVENUE
ROCKFORD, IL 61108
(815) 394-7270

CABLE TELEVISION:
MIKE OWENS
COMCAST
4450 KISHWAUKEE STREET
ROCKFORD, IL 61101
(815) 395-8977

ELECTRIC:
NED FLACK
COM ED
123 ENERGY DRIVE
ROCKFORD, IL 61109
(815) 490-2752

GAS:
BRUCE KOPPANG
DOT LIAISON
ENGINEERING DESIGN
NICOR GAS
1844 FERRY ROAD
NAPERVILLE, IL 60563
(530) 388-3046

JEFFREY S. LINKENFELD
062-048405
LICENSED PROFESSIONAL ENGINEER OF ILLINOIS
1-27-15
Exp 11-30-15

Call Before You Dig
JULIE
ILLINOIS ONE CALL SYSTEM
DIAL 811 OR (800) 892-0123

INDEX OF SHEETS

FOR INFORMATION ONLY

ARC DESIGN RESOURCES INC.
5291 ZENITH PARKWAY
LOVES PARK, IL 61111
VOICE: (815) 484-4300
FAX: (815) 484-4303
www.arcdesign.com
Design Firm License No. 184-001334

PROJECT NAME
OWNER'S NAME

ALPINE ROAD RECONSTRUCTION - PHASE 1
LOVES PARK, ILLINOIS

CONSULTANTS

ISSUED FOR

	DATE
BID	01-27-2015
----	----
----	----
----	----
----	----
----	----
----	----
----	----
----	----
----	----
----	----
----	----
----	----
----	----
----	----
----	----
----	----
----	----
----	----
----	----

REVISIONS

	ITEM	DATE
1.	----	----
2.	----	----
3.	----	----
4.	----	----
5.	----	----
6.	----	----
7.	----	----

SHEET TITLE
COVER

DRAWN	JGS
CHECKED	JSL
PM	JSL

PROJECT NUMBER
SHEET NUMBER
14085
C00

WILLETT HOFMANN & ASSOCIATES INC
ENGINEERING ARCHITECTURE LAND SURVEYING
809 EAST 2ND STREET, DIXON, IL 61021-0367
T: 815-284-3381 DESIGN FIRM: #184-000918

DESIGNED - PLP	REVISED -		
CHECKED - BKC	REVISED -		
DRAWN - FDL	REVISED -		
CHECKED - BKC	REVISED -		

WINNEBAGO COUNTY
F.A.P. 0412 (ALPINE RD) OVER FOREST HILLS RD
STATION 504+16.50

EXISTING REPAIR PLAN SHEETS
STRUCTURE NO. 101-3068
STRUCTURAL SHEET NO. 39 OF 63 SHEETS

F.A.P. RTE.	SECTION	COUNTY	TOTAL SHEETS	SHEET NO.
412	16-00620-00-BR	WINNEBAGO	109	77
	WHA* 1017D17	CONTRACT NO. 85704		
	ILLINOIS FED. AID PROJECT 7K29(857)			

Bench Mark: Chiseled Square at the Center of the Southeast Wing Wall Elev.=664.38

Existing Structure: SN 101-3068 built in 1972 as Section 122-B-CF.
Proposed Work: The proposed project consists of new expansion joints, curb face patching, a new wearing surface, and new approach pavement.

Note:
Existing Bridge Geometry and Dimensions taken from Original Bridge Plans Dated Feb. 1971.

Refer to Roadway Plans for Roadway/Bridge Profile Grades.

DESIGN STRESSES

ORIGINAL CONSTRUCTION
FIELD UNITS
f'c = 1,400 psi
fs = 20,000 psi (Reinf.)
fs = 20,000 psi (A-36)

NEW CONSTRUCTION
FIELD UNITS
f'c = 3,500 psi
fy = 60,000 psi (Reinf.)

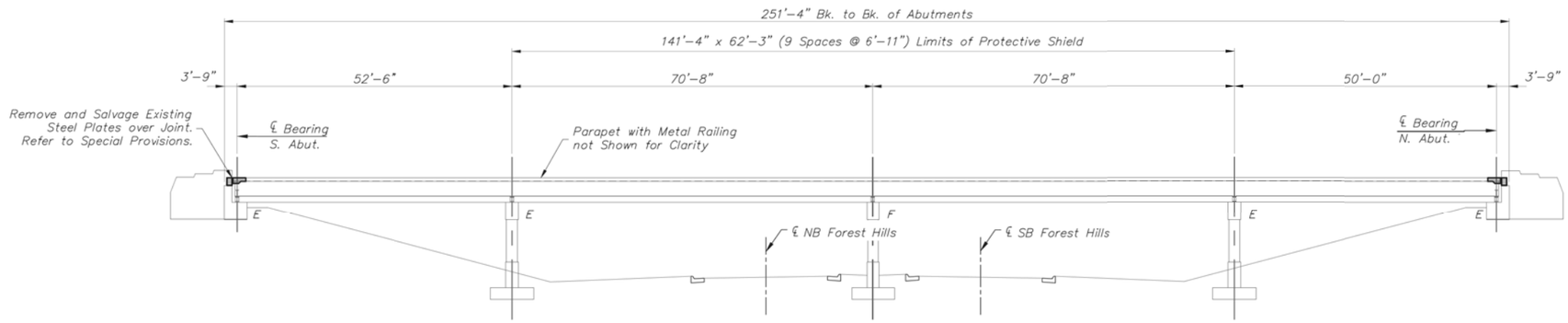

ELEVATION

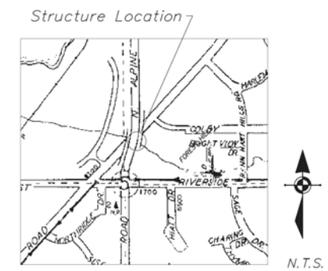

LOCATION MAP

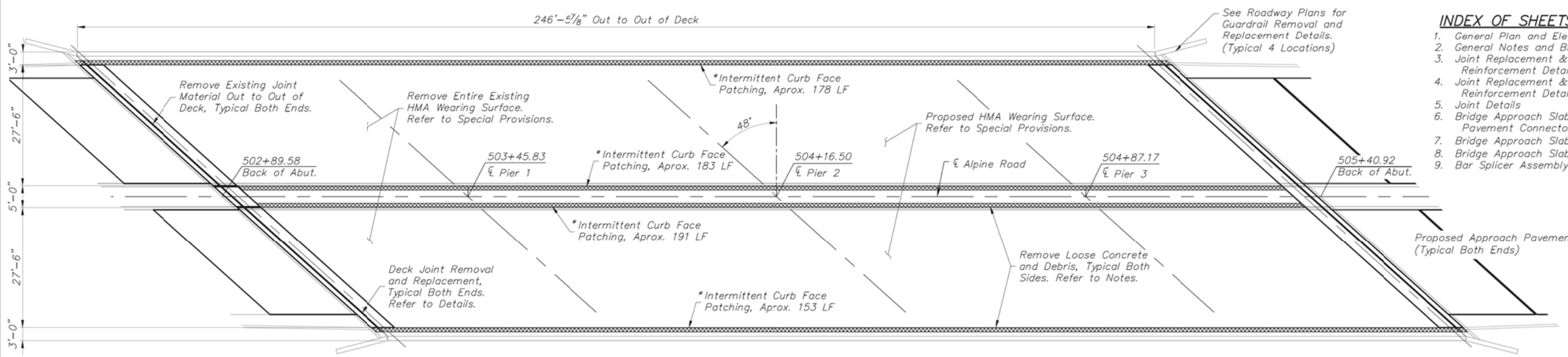

PLAN

* See General Notes and Curb Face Patching Detail on Sheet 5 of 9 for additional information.

INDEX OF SHEETS

FOR INFORMATION ONLY

ALI A. GHARAMTI
081-005080
LICENSED STRUCTURAL ENGINEER OF ILLINOIS
STATE OF ILLINOIS
Signature
Date 1/26/15
Exp. Date 11/30/16

GENERAL PLAN & ELEVATION
ALPINE ROAD, CH-44 OVER
FOREST HILLS ROAD
CITY OF LOVES PARK
WINNEBAGO COUNTY
STATION 504+16.50
STRUCTURE No. 101-3068

Sheet 1 of 9

SHEET REVIEW	
AGENCY	DATE

REVISIONS		
NO.	ITEM	DATE

SCALE: 1"=20'
DRAWN BY:
CHECKED BY:
DATE: 1/26/2015

McClure Engineering Associates, Inc.
7282 Argus Drive, Rockford, Illinois 61107-5837
(815) 398-2332 FAX (815) 398-2496
Design Firm License: Illinois 184-000816
Copyright 2015 By McClure Engineering Associates, Inc.

GENERAL PLAN & ELEVATION
ALPINE RD BRIDGE REHAB
ALPINE RD OVER FOREST HILLS RD — LOVES PARK, IL
FILE: H:\14-057 ALPINE BRIDGE\DESIGN\DRAWINGS\ACAD2009\14-057 DESIGN BASE.DWG — JOB: 04-30-14-057

SHEET BI

WILLETT HOFMANN & ASSOCIATES INC
ENGINEERING ARCHITECTURE LAND SURVEYING
809 EAST 2ND STREET, DIXON, IL 61021-0367
T: 815-284-3381 DESIGN FIRM: #184-000918

DESIGNED - PLP	REVISED -		
CHECKED - BKC	REVISED -		
DRAWN - FDL	REVISED -		
CHECKED - BKC	REVISED -		

WINNEBAGO COUNTY
F.A.P. 0412 (ALPINE RD) OVER FOREST HILLS RD
STATION 504+16.50

EXISTING REPAIR PLAN SHEETS
STRUCTURE NO. 101-3068
STRUCTURAL SHEET NO. 40 OF 63 SHEETS

F.A.P. RTE.	SECTION	COUNTY	TOTAL SHEETS	SHEET NO.
412	16-00620-00-BR	WINNEBAGO	109	78
	WHA* 1017D17	CONTRACT NO. 85704		
	ILLINOIS FED. AID PROJECT 7K29(857)			

GENERAL NOTES

The proposed items of work shown on these plans shall be constructed in accordance with the applicable sections of the current editions of the Illinois Department of Transportation (IDOT) "Standard Specifications for Road and Bridge Construction" and "Supplemental Specifications and Recurring Special Provisions."

The existing HMA wearing surface shall be removed and replaced according to the Special Provisions.

After the existing HMA wearing surface has been removed, the Contractor shall remove all loose concrete and debris from the curb lines including: concrete chunks, vegetation, sand, etc. Approved removal methods shall include rotary sweepers and blowing compressed air. Hydraulic and/or pneumatic demolition equipment shall not be used. Existing reinforcement bars exposed in the curb/median shall be swept clean and incorporated into the repair work without further sandblasting and painting required. Heavily damaged lengths of exposed reinforcement bars shall be cut and removed as directed by the Engineer. Contractor shall restore/patch the intermittent areas of removed curb/median faces as close as practical to their original dimensions. Hand formed curb profile, approved by the Engineer, will be acceptable. Refer to Special Provisions for additional information.

Reinforcement bars shall conform to the requirements of ASTM A706 Gr. 60. Reinforcement bars designated (E) shall be epoxy coated.

All structural steel shall conform to AASHTO M270 Grade 36 unless otherwise noted.

Calculated weight of Structural Steel = 6,743 pounds
16 @ 20.46 LF x 19.05 lb/LF = 6236 lbs
4 @ 6.65 LF x 19.05 lb/LF = 507 lbs
Cost of furnishing and installing the ¾"Ø x 8" welded studs will not be measured for payment but shall be included in the Contract Unit Price per Pound for FURNISHING AND ERECTING STRUCTURAL STEEL.

No field welding is permitted except as specified in the contract documents.

Prior to placing the new concrete section at the joints, all heavy or loose rust, loose mill scale, or loose or potentially detrimental foreign material shall be removed from the surfaces in contact with the concrete. Tightly adhered paint may remain unless otherwise noted. Removal shall be accomplished by methods that will not damage the steel. The cost of cleaning shall be included in the cost of CONCRETE REMOVAL.

Plan dimensions and details relative to existing plans are subject to nominal construction variations. The Contractor shall field verify existing dimensions and details affecting new construction and make necessary approved adjustments prior to construction or ordering materials. Such variations shall not be cause for additional compensation for a change in scope of work, however, the Contractor will be paid for the quantity actually furnished and installed at the unit price bid for the work.

All Construction Joints shall be bonded.

Existing reinforcement bars extending into the (joint) removal area shall be cleaned, straightened, and incorporated into the new construction. Any reinforcement bars that are damaged during concrete removal shall be replaced with an approved bar splicer or anchorage system. The cost of such replacement shall be included in the cost of CONCRETE REMOVAL.

Silicone Bridge Joint Sealer shall be in accordance with IDOT GBSP 35, except that the surface preparation will not require sandblasting; however, cleaning of the joint area with compressed air will be required per the specification.

Joint openings shall be adjusted according to Article 520.04 of the Std. Specs. when the new expansion joints are placed at an ambient temperature other than 50° F.

All structural steel shall be shop painted with inorganic zinc rich primer per AASHTO M300, Type 1. The cost of painting shall be included in the cost of FURNISHING AND ERECTING STRUCTURAL STEEL.

The existing structural steel coating contains lead. The Contractor shall take appropriate precautions to deal with the presence of lead on this project.

The Contractor shall take particular care in removing the existing HMA surface around the deck drain openings. The deck drain openings are to remain, and shall not be damaged by the removal operation.

The drilling and epoxy grouting of reinforcement bars shall be in accordance with Section 584 of the IDOT Standard Specifications. All material, labor, and equipment costs required to drill and set the reinforcement bars in epoxy grout shall be included in the Contract Unit Price per Each for DRILL AND GROUT BARS. Reinforcement bars set in the grout will be paid for at the Contract Unit Price per Pound for REINFORCEMENT BARS, EPOXY COATED.

Structure Excavation and/or Embankment required to complete the items of work shown on these plans will not be measured or paid for separately, but shall be included in the cost of that item of Work. The embankment material shall be acceptable to the Engineer and shall be placed and compacted to the satisfaction of the Engineer.

Disposal of all surplus and excavated material shall be the responsibility of the Contractor. No additional compensation will be allowed.

The width of the gutter for the proposed combination curb and gutter and/or median shall transition from the existing bridge cross section to the proposed roadway section. See Roadway Plans for details. The cost of this transition shall be included in the cost of the combination curb and gutter and/or median installed.

The deck joint surface and bridge approach pavement shall have a tined final finish in accordance with Article 420.09(e)(1) of the IDOT Standard Specifications with hand finishing to be allowed. Cost for final finishing will not be paid for separately but shall be included with that item of Work.

Protective Coat shall be applied to all new concrete surfaces including the approach pavement and the adjacent medians, curbs, and gutters.

See Roadway Plans for guardrail attached to the structure.

Protective Shield shall be in accordance with Article 501.03 of the IDOT Standard Specifications, except drawings and calculations submittal will not be required. Forest Hills Road lane closures must be coordinated and approved prior to scheduling the installation of the protective shield system. Contractor shall coordinate the installation of the protective shield system with the requirements of the traffic control plan as specified in the Roadway Plans.

Material testing shall be in accordance with IDOT QA/QC procedures with no additional cost to the Contract. Refer to Contract Documents and Special Provisions.

The following items shall be coordinated with, and will be included for payment with, the Roadway Plan Items; Guardrail Removal and Replacement including attachment to the existing structure; Traffic Control; Pavement Marking on the bridge deck and approach pavement; Removal of Existing Approach Pavement Connectors, Joints, Concrete Medians, and Concrete Curb and Gutters; Construction Layout; and Restoration. See Roadway Plans and Special Provisions for specific details.

TOTAL BILL OF MATERIAL

Pay Code	Description	Units	Quantity
50102400	Concrete Removal	Cu. Yd.	27.6
50300255	Concrete Superstructure	Cu. Yd.	112.2
50800205	Reinforcement Bars, Epoxy Coated	Pound	20,197
50800515	Bar Splicers	Each	50
SP Z0004556	HMA Surface Removal (Deck)	Sq. Yd.	1,508
SP 40603340	HMA Surface Course, Mix "D", N70	Ton	175
50500405	Furnishing and Erecting Structural Steel	Pound	6,743
52000030	Preformed Joint Seal, 2½"	Foot	184
* 50300300	Protective Coat	Sq. Yd.	626
42001420	Approach Pavement Connector (PCC)	Sq. Yd.	248.8
50157300	Protective Shield	Sq. Yd.	977
SP Z0004552	Approach Pavement Removal	Sq. Yd.	213.3
SP LP000001	Intermittent Curb Face Patching	Foot	705
Z0018905	Drill and Grout Bars	Each	106
SP Z0021906	Silicone Joint Sealer, 1½"	Foot	18
42001200	Pavement Fabric	Sq. Yd.	248.8

* – Apply to New Concrete Only
SP – See Job Specific Special Provisions

FOR INFORMATION ONLY

GENERAL NOTES & BILL OF MATERIAL
ALPINE ROAD, CH-44 OVER
FOREST HILLS ROAD
CITY OF LOVES PARK
WINNEBAGO COUNTY
STATION 504+16.50
STRUCTURE No. 101-3068

Sheet 2 of 9

SHEET REVIEW	
AGENCY	DATE

REVISIONS		
NO.	ITEM	DATE

SCALE: 1"=20'
DRAWN BY:
CHECKED BY:
DATE: 1/26/2015

McClure Engineering Associates, Inc.
7282 Argus Drive, Rockford, Illinois 61107-5837
(815) 398-2332 FAX (815) 398-2496
Design Firm License: Illinois 184-000816

GENERAL NOTES & BILL OF MATERIAL
ALPINE RD BRIDGE REHAB
ALPINE RD OVER FOREST HILLS RD — LOVES PARK, IL
FILE:H:\14-057 ALPINE BRIDGE\DESIGN\DRAWINGS\ACAD2009\14-057 DESIGN BASE.DWG — JOB:04-30-14-057

SHEET B2

WILLETT HOFMANN & ASSOCIATES INC
ENGINEERING ARCHITECTURE LAND SURVEYING
809 EAST 2ND STREET, DIXON, IL 61021-0367
T: 815-284-3381 DESIGN FIRM: #184-000918

DESIGNED -	PLP	REVISED -	
CHECKED -	BKC	REVISED -	
DRAWN -	FDL	REVISED -	
CHECKED -	BKC	REVISED -	

WINNEBAGO COUNTY
F.A.P. 0412 (ALPINE RD) OVER FOREST HILLS RD
STATION 504+16.50

EXISTING REPAIR PLAN SHEETS
STRUCTURE NO. 101-3068
STRUCTURAL SHEET NO. 41 OF 63 SHEETS

F.A.P. RTE.	SECTION	COUNTY	TOTAL SHEETS	SHEET NO.
412	16-00620-00-BR	WINNEBAGO	109	79
	WHA# 1017D17	CONTRACT NO. 85704		
	ILLINOIS FED. AID PROJECT 7K29(857)			

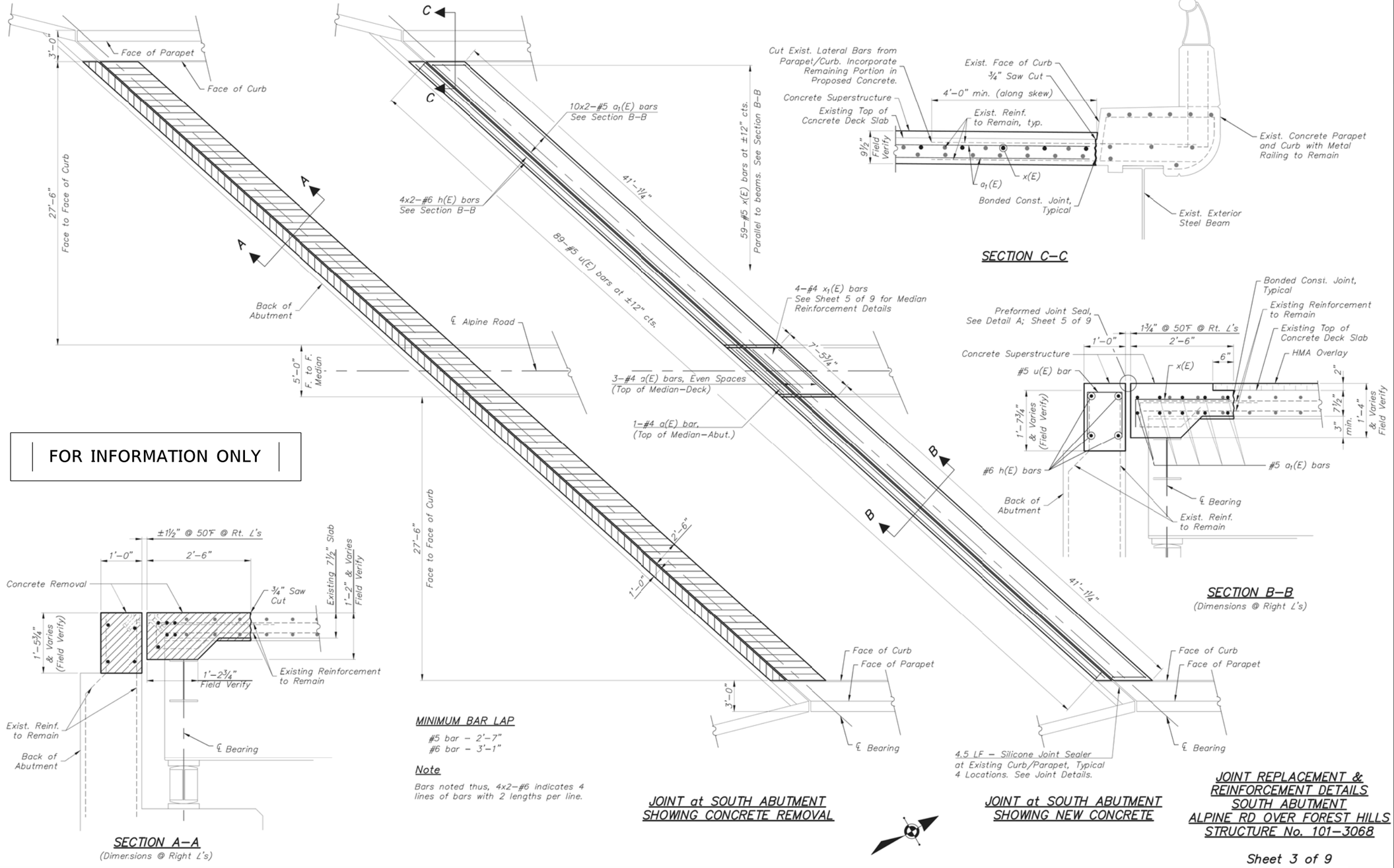

FOR INFORMATION ONLY

SHEET REVIEW	
AGENCY	DATE

REVISIONS		
NO.	ITEM	DATE

SCALE: 1"=20'
DRAWN BY:
CHECKED BY:
DATE: 1/26/2015

McClure Engineering Associates, Inc.
7282 Argus Drive, Rockford, Illinois 61107-5837
(815) 398-2332 FAX (815) 398-2496
Design Firm License: Illinois 184-000816

JOINT REPL. & REINF. DETAILS - S. ABUT.
ALPINE RD BRIDGE REHAB
ALPINE RD OVER FOREST HILLS RD — LOVES PARK, IL
FILE: H:\14-057 ALPINE BRIDGE\DESIGN\DRAWINGS\ACAD2009\14-057 DESIGN BASE.DWG — JOB: 04-30-14-057

SHEET B3

WILLETT HOFMANN & ASSOCIATES INC
ENGINEERING ARCHITECTURE LAND SURVEYING
809 EAST 2ND STREET, DIXON, IL 61021-0367
T: 815-284-3381 DESIGN FIRM: #184-000918

DESIGNED - PLP	REVISED -		
CHECKED - BKC	REVISED -		
DRAWN - FDL	REVISED -		
CHECKED - BKC	REVISED -		

WINNEBAGO COUNTY
F.A.P. 0412 (ALPINE RD) OVER FOREST HILLS RD
STATION 504+16.50

EXISTING REPAIR PLAN SHEETS
STRUCTURE NO. 101-3068
STRUCTURAL SHEET NO. 42 OF 63 SHEETS

F.A.P. RTE.	SECTION	COUNTY	TOTAL SHEETS	SHEET NO.
412	16-00620-00-BR	WINNEBAGO	109	80
	WHA# 1017D17	CONTRACT NO. 85704		
	ILLINOIS	FED. AID PROJECT 7K29(857)		

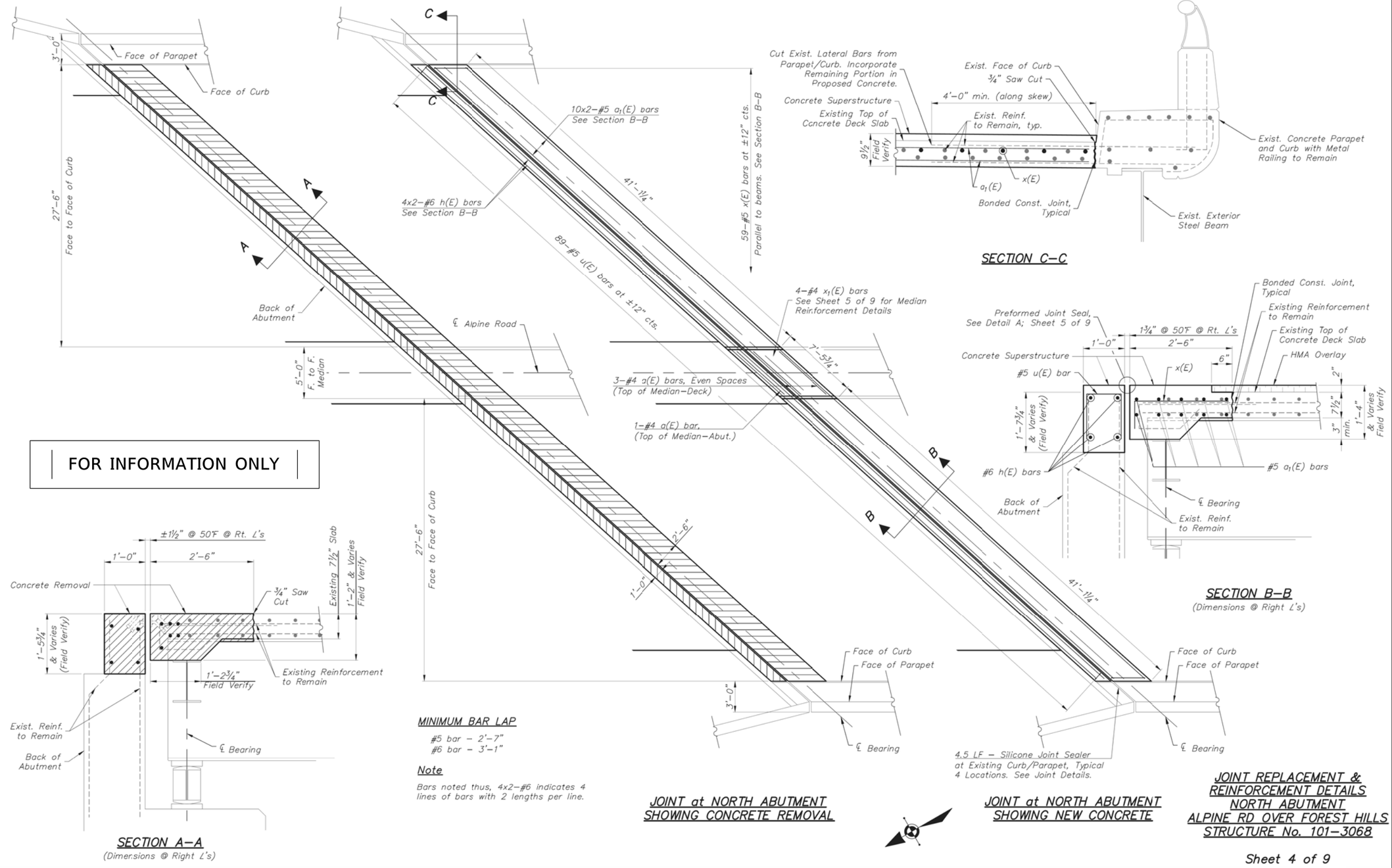

FOR INFORMATION ONLY

SHEET REVIEW	
AGENCY	DATE

REVISIONS		
NO.	ITEM	DATE

SCALE: 1"=20'
DRAWN BY:
CHECKED BY:
DATE: 1/26/2015

McClure Engineering Associates, Inc.
7282 Argus Drive, Rockford, Illinois 61107-5837
(815) 398-2332 FAX (815) 398-2496
Design Firm License: Illinois 184-000816

JOINT REPL. & REINF. DETAILS - N. ABUT.
ALPINE RD BRIDGE REHAB
ALPINE RD OVER FOREST HILLS RD — LOVES PARK, IL
FILE: H:\14-057 ALPINE BRIDGE\DESIGN\DRAWINGS\ACAD2009\14-057 DESIGN BASE.DWG — JOB: 04-30-14-057

SHEET B4

WILLETT HOFMANN & ASSOCIATES INC
ENGINEERING ARCHITECTURE LAND SURVEYING
809 EAST 2ND STREET, DIXON, IL 61021-0367
T: 815-284-3381 DESIGN FIRM: #184-000918

DESIGNED - PLP	REVISED -		
CHECKED - BKC	REVISED -		
DRAWN - FDL	REVISED -		
CHECKED - BKC	REVISED -		

WINNEBAGO COUNTY
F.A.P. 0412 (ALPINE RD) OVER FOREST HILLS RD
STATION 504+16.50

EXISTING REPAIR PLAN SHEETS
STRUCTURE NO. 101-3068
STRUCTURAL SHEET NO. 43 OF 63 SHEETS

F.A.P. RTE.	SECTION	COUNTY	TOTAL SHEETS	SHEET NO.
412	16-00620-00-BR	WINNEBAGO	109	81
	WHA# 1017D17	CONTRACT NO. 85704		
	ILLINOIS	FED. AID PROJECT 7K29(857)		

PRINT_ORGANIZER_BW.pltcfg 11/4/2020 7:21:55 AM = PLOTTED
FILE = S:\PROJECTS\2017\1017D17_WNCH\DESIGN\CAD_SHEETS\1017D17_Existing Repair Plans.dgn

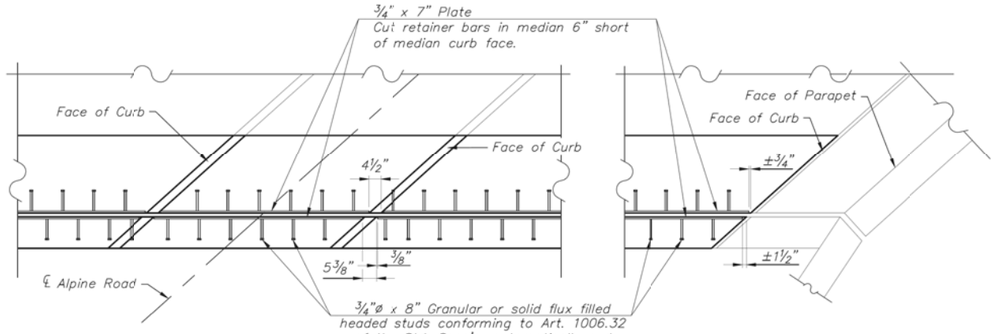

MEDIAN

CURB/PARAPET

PARTIAL PLAN

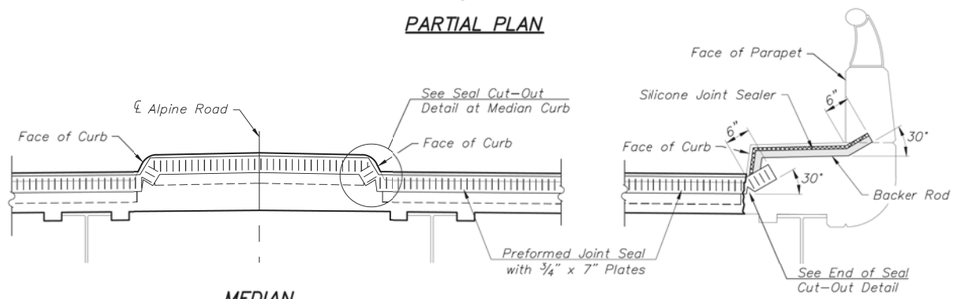

MEDIAN

PARTIAL SECTION

CURB/PARAPET

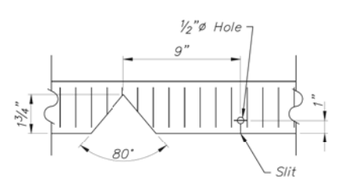

SEAL CUT-OUT AT MEDIAN CURB

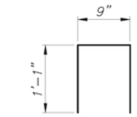

Bar u(E)

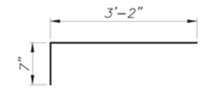

Bar x(E)

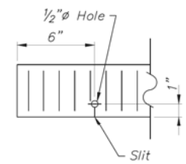

END OF SEAL CUT-OUT

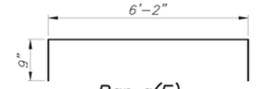

Bar a(E)

BILL OF MATERIAL

(2-ABUTMENTS)

Bar	No.	Size	Length	Shape
a(E)	8	#4	7'-8"	
a_1(E)	40	#5	45'-11"	
h(E)	16	#6	46'-2"	
u(E)	178	#5	2'-11"	n
x(E)	118	#5	3'-9"	
x_1(E)	8	#4	3'-2"	
Concrete Superstructure			Cu. Yd.	29.5
Concrete Removal			Cu. Yd.	27.6
Reinforcement Bars, Epoxy Coated			Pound	4,086
Preformed Jt. Seal 2 1/2"			Foot	184
Silicone Jt. Sealer 1 1/2"			Foot	18
Protective Coat			Sq. Yd.	238
Furnishing & Erecting Structural Steel			Pound	6,743

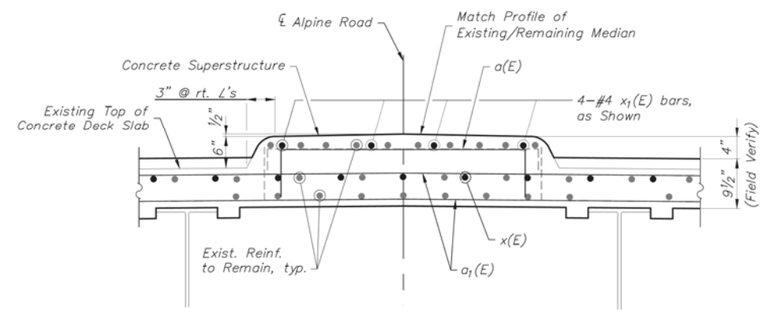

SECTION AT MEDIAN

(Showing Median on Bridge Deck Along Skew)

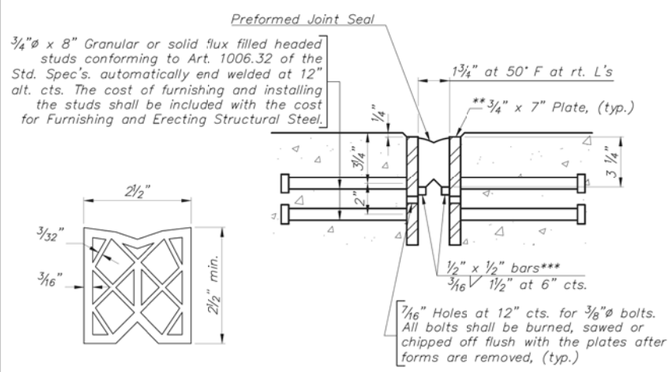

** Furnish in segments of 20'-6" maximum length. Maximum space between installed segments shall be 3/16". Seal space with Silicone Sealant suitable for Structural Steel.

*** Cut retainer bars in median 6" short of the median face.

DETAIL A

Note:
After fabrication all surfaces of the steel plates shall be given one coat of paint specified for structural steel. No field painting required.

PREFORMED JOINT SEAL

(See Curb/Parapet Partial Section for O.-O. Limits)

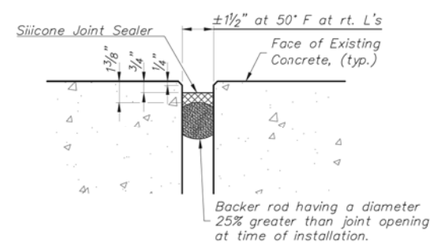

SILICONE JOINT SEALER

(At Existing Curb/Walk Adjacent to Parapets)

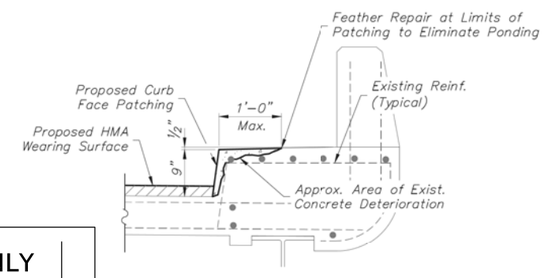

CURB FACE PATCHING DETAIL

(Dimensions at Right L's to Centerline, Median Curb Patching Similar)

FOR INFORMATION ONLY

JOINT DETAILS
ALPINE ROAD, CH-44 OVER
FOREST HILLS ROAD
CITY OF LOVES PARK
WINNEBAGO COUNTY
STATION 504+16.50
STRUCTURE No. 101-3068

Sheet 5 of 9

SHEET REVIEW	
AGENCY	DATE

REVISIONS		
NO.	ITEM	DATE

SCALE: 1"=20'
DRAWN BY:
CHECKED BY:
DATE: 1/26/2015

McClure Engineering Associates, Inc.
7282 Argus Drive, Rockford, Illinois 61107-5837
(815) 398-2332 FAX (815) 398-2496
Design Firm License: Illinois 184-000816

JOINT DETAILS
ALPINE RD BRIDGE REHAB
ALPINE RD OVER FOREST HILLS RD — LOVES PARK, IL
FILE: H:\14-057 ALPINE BRIDGE\DESIGN\DRAWINGS\ACAD2009\14-057 DESIGN BASE.DWG — JOB: 04-30-14-057

SHEET B5

WILLETT HOFMANN & ASSOCIATES INC
ENGINEERING ARCHITECTURE LAND SURVEYING
809 EAST 2ND STREET, DIXON, IL 61021-0367
T: 815-284-3381 DESIGN FIRM: #184-000918

DESIGNED - PLP	REVISED -		
CHECKED - BKC	REVISED -		
DRAWN - FDL	REVISED -		
CHECKED - BKC	REVISED -		

WINNEBAGO COUNTY
F.A.P. 0412 (ALPINE RD) OVER FOREST HILLS RD
STATION 504+16.50

EXISTING REPAIR PLAN SHEETS
STRUCTURE NO. 101-3068
STRUCTURAL SHEET NO. 44 OF 63 SHEETS

F.A.P. RTE.	SECTION	COUNTY	TOTAL SHEETS	SHEET NO.
412	16-00620-00-BR	WINNEBAGO	109	82
	WHA* 1017D17	CONTRACT NO. 85704		
	ILLINOIS FED. AID PROJECT 7K29(857)			

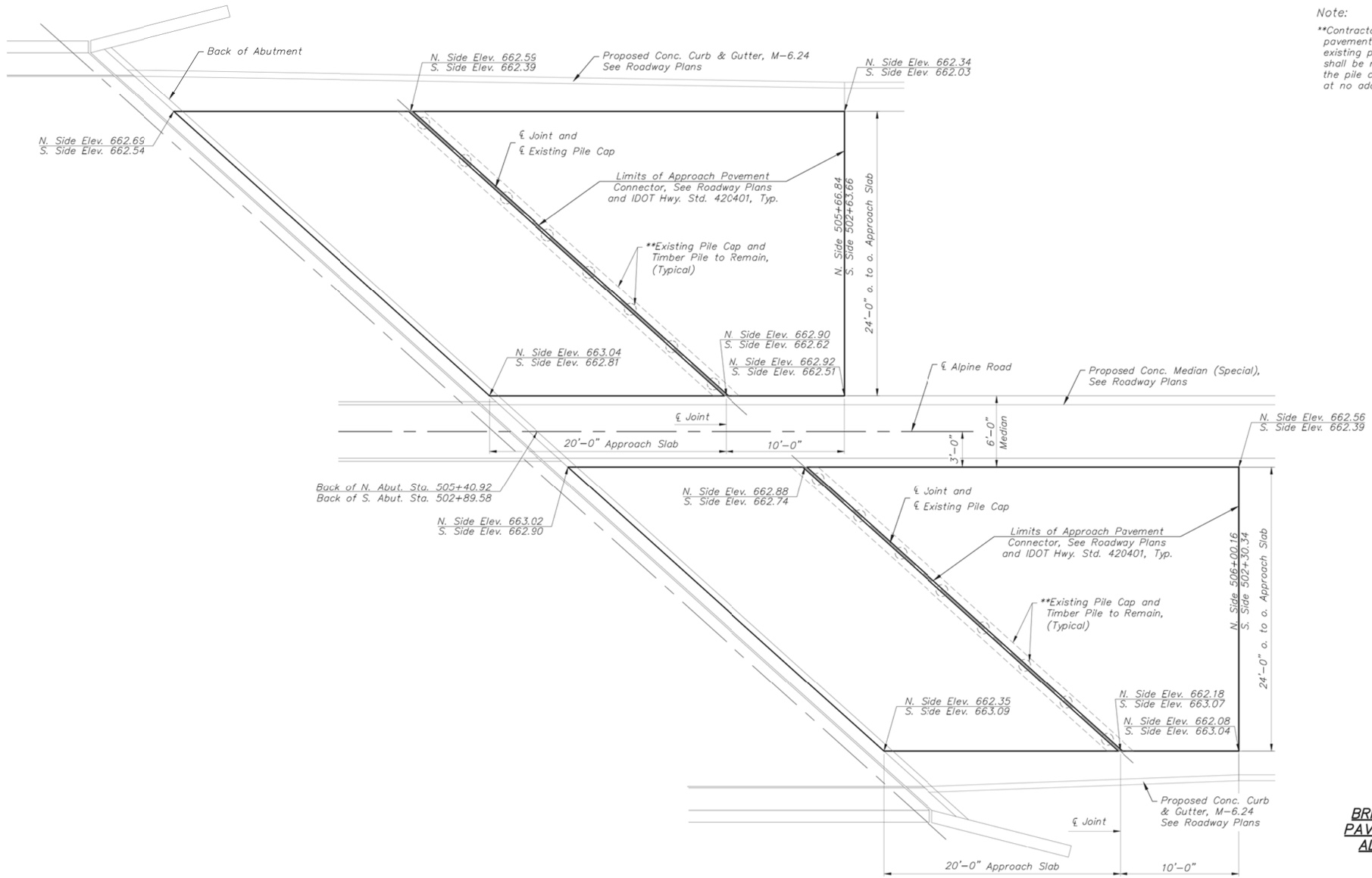

Note:

**Contractor shall remove existing approach pavement with care to avoid damage to the existing pile cap and timber piles. Contractor shall be responsible to repair any damage to the pile cap caused during removal operations at no additional cost to the contract.

FOR INFORMATION ONLY

LAYOUT PLAN

Showing Layout and Elevations for Both Ends of Bridge
Elevations for North Approaches (N. Side Elev. X.XX) and Elevations for South Approaches (S. Side Elev. X.XX)

BRIDGE APPROACH SLAB AND
PAVEMENT CONNECTOR LAYOUT
ALPINE ROAD, CH-44 OVER
FOREST HILLS ROAD
CITY OF LOVES PARK
WINNEBAGO COUNTY
STATION 504+16.50
STRUCTURE No. 101-3068

Sheet 6 of 9

SHEET REVIEW	
AGENCY	DATE

REVISIONS		
NO.	ITEM	DATE

SCALE: 1"=20'
DRAWN BY:
CHECKED BY:
DATE: 1/26/2015

McClure Engineering Associates, Inc.
7282 Argus Drive, Rockford, Illinois 61107-5837
(815) 398-2332 FAX (815) 398-2496
Design Firm License: Illinois 184-000816

BRIDGE APPR. SLAB & PVMNT. CONN. LAYOUT
ALPINE RD BRIDGE REHAB
ALPINE RD OVER FOREST HILLS RD — LOVES PARK, IL
FILE: H:\14-057 ALPINE BRIDGE\DESIGN\DRAWINGS\ACAD2009\14-057 DESIGN BASE.DWG — JOB: 04-30-14-057

SHEET B6

WILLETT HOFMANN & ASSOCIATES INC
ENGINEERING ARCHITECTURE LAND SURVEYING
809 EAST 2ND STREET, DIXON, IL 61021-0367
T: 815-284-3381 DESIGN FIRM: #184-000918

DESIGNED -	PLP	REVISED -	
CHECKED -	BKC	REVISED -	
DRAWN -	FDL	REVISED -	
CHECKED -	BKC	REVISED -	

WINNEBAGO COUNTY
F.A.P. 0412 (ALPINE RD) OVER FOREST HILLS RD
STATION 504+16.50

EXISTING REPAIR PLAN SHEETS
STRUCTURE NO. 101-3068
STRUCTURAL SHEET NO. 45 OF 63 SHEETS

F.A.P. RTE.	SECTION	COUNTY	TOTAL SHEETS	SHEET NO.
412	16-00620-00-BR	WINNEBAGO	109	83
	WHA# 1017D17	CONTRACT NO. 85704		
	ILLINOIS	FED. AID PROJECT 7K29(857)		

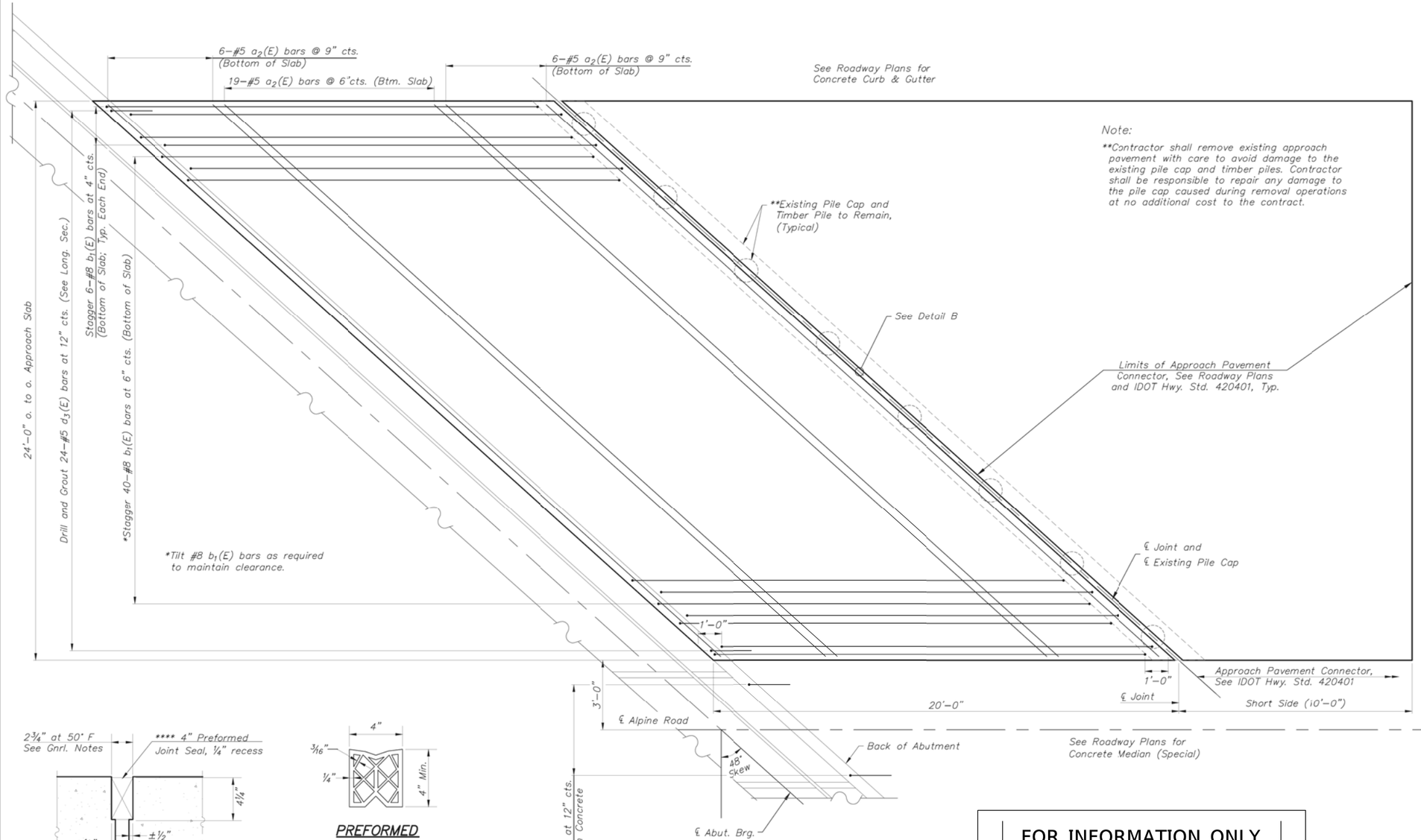

FOR INFORMATION ONLY

(Sheet 1 of 2)

BRIDGE APPROACH SLAB DETAILS
ALPINE ROAD, CH-44 OVER
FOREST HILLS ROAD
CITY OF LOVES PARK
WINNEBAGO COUNTY
STATION 504+16.50
STRUCTURE No. 101-3068

Sheet 7 of 9

SHEET REVIEW	
AGENCY	DATE

REVISIONS		
NO.	ITEM	DATE

SCALE: 1"=20'
DRAWN BY:
CHECKED BY:
DATE: 1/26/2015

McClure Engineering Associates, Inc.
7282 Argus Drive (815) 398-2332 Rockford, Illinois 61107-5837 FAX (815) 398-2496
Design Firm License: Illinois 184-000816

BRIDGE APPR. SLAB DETAILS - I
ALPINE RD BRIDGE REHAB
ALPINE RD OVER FOREST HILLS RD — LOVES PARK, IL
FILE:H:\14-057 ALPINE BRIDGE\DESIGN\DRAWINGS\ACAD2009\14-057 DESIGN BASE.DWG — JOB: 04-30-14-057

SHEET B7

WILLETT HOFMANN & ASSOCIATES INC
ENGINEERING ARCHITECTURE LAND SURVEYING
809 EAST 2ND STREET, DIXON, IL 61021-0367
T: 815-284-3381 DESIGN FIRM: #184-000918

DESIGNED -	PLP	REVISED -	
CHECKED -	BKC	REVISED -	
DRAWN -	FDL	REVISED -	
CHECKED -	BKC	REVISED -	

WINNEBAGO COUNTY
F.A.P. 0412 (ALPINE RD) OVER FOREST HILLS RD
STATION 504+16.50

EXISTING REPAIR PLAN SHEETS
STRUCTURE NO. 101-3068
STRUCTURAL SHEET NO. 46 OF 63 SHEETS

F.A.P. RTE.	SECTION	COUNTY	TOTAL SHEETS	SHEET NO.
412	16-00620-00-BR	WINNEBAGO	109	84
WHA* 1017D17		CONTRACT NO. 85704		
		ILLINOIS FED. AID PROJECT 7K29(857)		

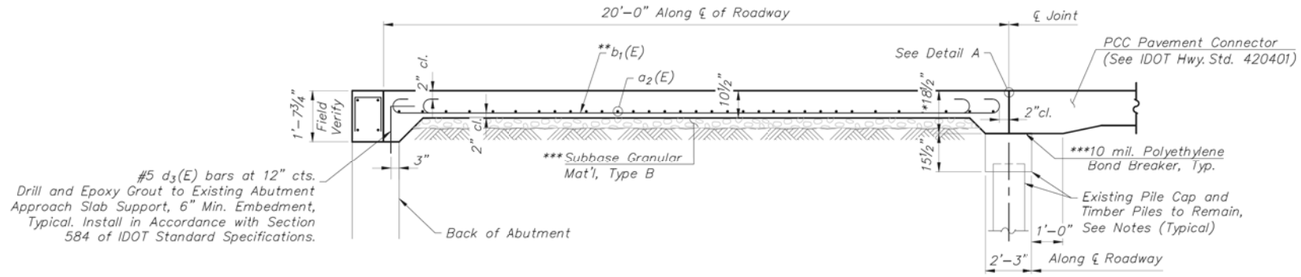

LONGITUDINAL SECTION

BILL OF MATERIAL
(2-APPROACHES)

Bar	No.	Size	Length	Shape
$a_2(E)$	124	#5	35'-4"	
$d_3(E)$	106	#5	2'-3"	
$b_1(E)$	208	#8	20'-4"	
Concrete Superstructure			Cu. Yd.	82.6
Approach Pvmt. Removal			Sq. Yd.	213.3
Reinforcement Bars, Epoxy Coated			Pound	16,111
Approach Pvmt. Conn.			Sq. Yd.	248.8
Protective Shield			Sq. Yd.	977
Protective Coat			Sq. Yd.	388

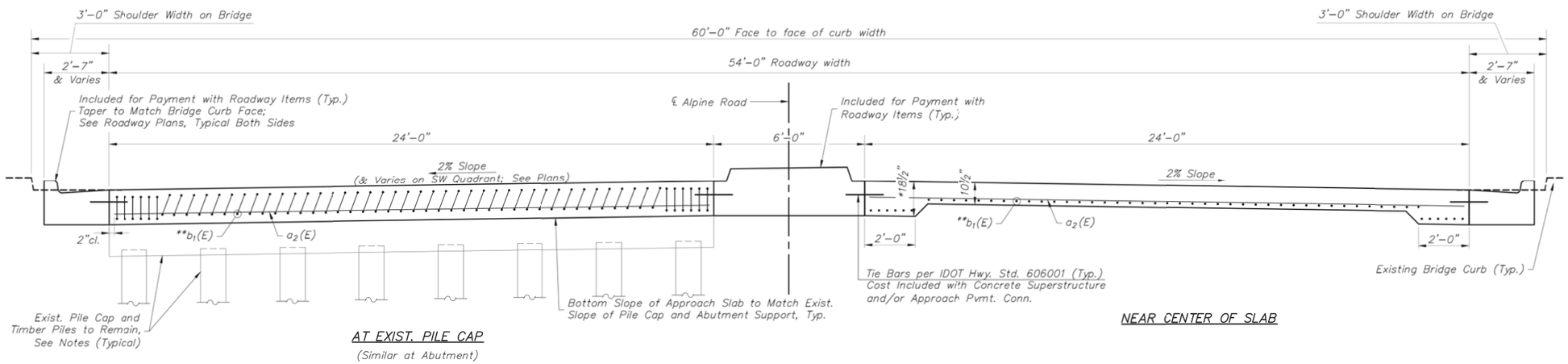

SECTION VIEW OF APPROACH SLAB
(See Plan (Sheet 1 of 2) for Dimensions Not Shown)

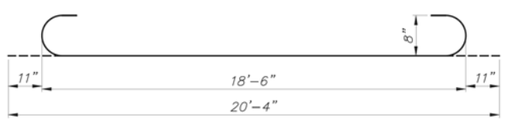

BAR $b_1(E)$

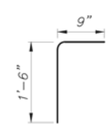

BAR $d_3(E)$

Notes:

Approach slab concrete shall be paid for as Concrete Superstructure.

Reinforcement shall be paid for as Reinforcement Bars, Epoxy Coated.

Any excavation required for approach slab construction not included in Concrete Removal or Approach Pavement Removal shall be included with Concrete Superstructure.

Contractor shall remove existing approach pavement with care to avoid damage to the existing pile cap and timber piles. Contractor shall be responsible to repair any damage to the pile cap caused during removal operations at no additional cost to the contract.

*And Varies, Field Verify

**Tilt #8 $b_1(E)$ bars as required to maintain clearance.

***Cost Included with Concrete Superstructure

FOR INFORMATION ONLY

(Sheet 2 of 2)

BRIDGE APPROACH SLAB DETAILS
ALPINE ROAD, CH-44 OVER FOREST HILLS ROAD
CITY OF LOVES PARK
WINNEBAGO COUNTY
STATION 504+16.50
STRUCTURE No. 101-3068

Sheet 8 of 9

SHEET REVIEW	
AGENCY	DATE

REVISIONS		
NO.	ITEM	DATE

SCALE: 1"=20'
DRAWN BY:
CHECKED BY:
DATE: 1/26/2015

McClure Engineering Associates, Inc.
7282 Argus Drive, Rockford, Illinois 61107-5837
(815) 398-2332 FAX (815) 398-2496
Design Firm License: Illinois 184-000816
Copyright 2015 By McClure Engineering Associates, Inc.

BRIDGE APPR. SLAB DETAILS - 2
ALPINE RD BRIDGE REHAB
ALPINE RD OVER FOREST HILLS RD — LOVES PARK, IL
FILE: H:\14-057 ALPINE BRIDGE\DESIGN\DRAWINGS\ACAD2009\14-057 DESIGN BASE.DWG — JOB: 04-30-14-057

SHEET B8

WILLETT HOFMANN & ASSOCIATES INC
ENGINEERING ARCHITECTURE LAND SURVEYING
809 EAST 2ND STREET, DIXON, IL 61021-0367
T: 815-284-3381 DESIGN FIRM: #184-000918

DESIGNED -	PLP	REVISED -	
CHECKED -	BKC	REVISED -	
DRAWN -	FDL	REVISED -	
CHECKED -	BKC	REVISED -	

WINNEBAGO COUNTY
F.A.P. 0412 (ALPINE RD) OVER FOREST HILLS RD
STATION 504+16.50

EXISTING REPAIR PLAN SHEETS
STRUCTURE NO. 101-3068
STRUCTURAL SHEET NO. 47 OF 63 SHEETS

F.A.P. RTE.	SECTION	COUNTY	TOTAL SHEETS	SHEET NO.
412	16-00620-00-BR	WINNEBAGO	109	85
	WHA# 1017D17	CONTRACT NO. 85704		
	ILLINOIS FED. AID PROJECT 7K29(857)			

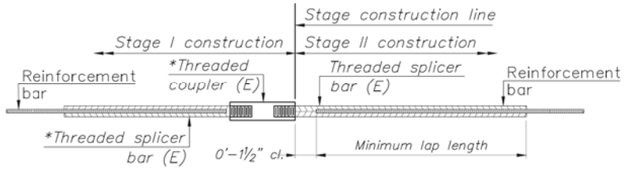

STANDARD BAR SPLICER ASSEMBLY

Minumum Lap Lengths						
Bar size to be spliced	Table 1	Table 2	Table 3	Table 4	Table 5	Table 6
3, 4	1'–5"	1'–11"	2'–1"	2'–4"	2'–7"	2'–11"
5	1'–9"	2'–5"	2'–7"	2'–11"	3'–3"	3'–8"
6	2'–1"	2'–11"	3'–1"	3'–6"	3'–10"	4'–5"
7	2'–9"	3'–10"	4'–2"	4'–8"	5'–2"	5'–10"
8	3'–8"	5'–1"	5'–5"	6'–2"	6'–9"	7'–8"
9	4'–7"	6'–5"	6'–10"	7'–9"	8'–7"	9'–8"

Table 1: Black bar, 0.8 Class C
Table 2: Black bar, Top bar lap, 0.8 class C
Table 3: Epoxy bar, 0.8 Class C
Table 4: Epoxy bar, Top bar lap, 0.8 class C
Table 5: Epoxy bar, Class C
Table 6: Epoxy bar, Top bar top, Class C

Threaded slicer bar length = min. lap length + 1½" + thread length

* Epoxy not required on Bar Splicer Assembly components used in conjunction with black bars.

Location	Bar size	No. assemblies required	Table for minimum lap length

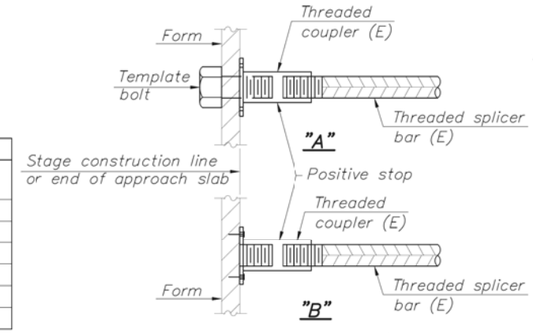

INSTALLATION AND SETTING METHODS

"A": Set bar splicer assembly by means of a template bolt.

"B": Set bar splicer assembly by nailing to wood forms or cementing to steel forms.

(E): Indicates epoxy coating.

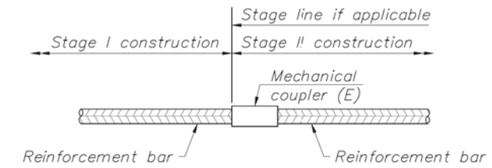

STANDARD MECHANICAL SPLICER

Location	Bar size	No. assemblies required
Joint Repair	#5	20
Joint Repair	#6	30

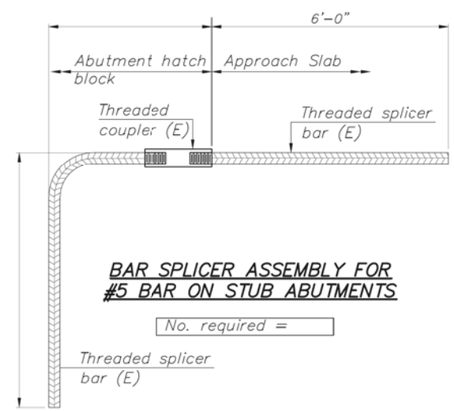

BAR SPLICER ASSEMBLY FOR #5 BAR ON STUB ABUTMENTS

No. required =

NOTES

Splicer bars shall be deformed with threaded ends and have a minimum 60 ksi yield strength.

All reinforcement shall be lapped and tied to the splicer bars.

Bar splicer assemblies shall be epoxy coated according to the requirements for reinforcement bars. See Section 508 of the Standard Specifications.

See approved list of bar splicer assemblies and mechanical splicers for alternatives.

FOR INFORMATION ONLY

BSD–1 8–31–12

BAR SPLICER ASSEMBLY
ALPINE ROAD, CH–44 OVER
FOREST HILLS ROAD
CITY OF LOVES PARK
WINNEBAGO COUNTY
STATION 504+16.50
STRUCTURE No. 101–3068

Sheet 9 of 9

SHEET REVIEW	
AGENCY	DATE

REVISIONS		
NO.	ITEM	DATE

SCALE: 1"=20'
DRAWN BY:
CHECKED BY:
DATE: 1/26/2015

McClure Engineering Associates, Inc.
7282 Argus Drive, Rockford, Illinois 61107–5837
(815) 398–2332 FAX (815) 398–2496
Design Firm License: Illinois 184–000816
Copyright 2015 By McClure Engineering Associates, Inc.

BAR SPLICER ASSEMBLY
ALPINE RD BRIDGE REHAB
ALPINE RD OVER FOREST HILLS RD — LOVES PARK, IL
FILE: H:\14-057 ALPINE BRIDGE\DESIGN\DRAWINGS\ACAD2009\14-057 DESIGN BASE.DWG — JOB: 04-30-14-057

SHEET B9

WILLETT HOFMANN & ASSOCIATES INC
ENGINEERING ARCHITECTURE LAND SURVEYING
809 EAST 2ND STREET, DIXON, IL 61021-0367
T: 815-284-3381 DESIGN FIRM: #184-000918

DESIGNED -	PLP	REVISED -	
CHECKED -	BKC	REVISED -	
DRAWN -	FDL	REVISED -	
CHECKED -	BKC	REVISED -	

WINNEBAGO COUNTY
F.A.P. 0412 (ALPINE RD) OVER FOREST HILLS RD
STATION 504+16.50

EXISTING REPAIR PLAN SHEETS
STRUCTURE NO. 101–3068
STRUCTURAL SHEET NO. 48 OF 63 SHEETS

F.A.P. RTE.	SECTION	COUNTY	TOTAL SHEETS	SHEET NO.
412	16-00620-00-BR	WINNEBAGO	109	86
WHA# 1017D17		CONTRACT NO. 85704		
	ILLINOIS	FED. AID PROJECT 7K29(857)		

CATCH BASIN OR INLETS TO BE ADJUSTED OR RECONSTRUCTED
(DETAILS FOR CURB & GUTTER REPLACEMENT)

CONCRETE CURB AND GUTTER SHALL BE CONSTRUCTED IN ACCORDANCE WITH SECTION 606 OF THE STANDARD SPECIFICATIONS, SUPPLEMENTAL SPECIFICATIONS, STANDARD 606001 AND THIS DRAWING.

CLASS SI CONCRETE SHALL BE USED THROUGHOUT. A HOLE 1-1/2 IN DIAMETER AND 9 DEEP SHALL BE DRILLED IN THE EXISTING CONCRETE CURB AS SHOWN. A 1-1/4 X 18 SMOOTH DOWEL BAR SHALL BE GROUTED IN THE HOLE LONGITUDINALLY.

JOINTS OF A TYPE SIMILAR TO THAT IN THE UNDER-LYING PAVEMENT (EXPANSION OR CONTRACTION) SHALL BE INSTALLED IN THE CONCRETE CURB IN ALIGNMENT WITH THE JOINTS IN THE PAVEMENT.

THE PROPOSED CONFIGURATION OF THE CURB AND GUTTER SHALL MATCH THAT REMOVED.

THE LOCATION OF THE DOWEL BAR SHALL BE DETERMINED BY THE ENGINEER.

ALL EXISTING TIE BARS IN EDGE OF PAVEMENT SLAB THRU REPLACEMENT AREA SHALL BE CUT OFF.

THE WORK SHALL BE DONE IN ACCORDANCE WITH SECTION 602 OF THE STANDARD SPECIFICATIONS AND INCLUDES THE REMOVAL AND REPLACEMENT OF SOD, CONCRETE PAVEMENT AND/OR CURB AND GUTTER ADJACENT TO CATCH BASINS OR INLETS TO BE ADJUSTED OR RECONSTRUCTED AND SHALL BE INCLUDED IN THE PAY ITEM OF CATCH BASINS OR INLETS TO BE ADJUSTED OR RECONSTRUCTED AS SPECIFIED.

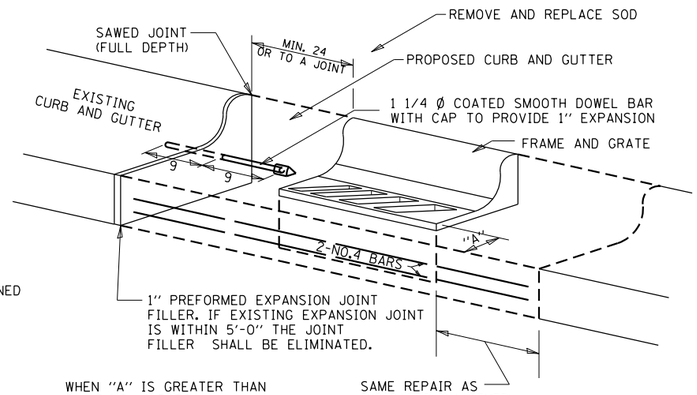

ALL DIMENSIONS ARE IN INCHES UNLESS OTHERWISE NOTED.

REVISED - 9-30-11

CATCH BASIN OR INLETS TO BE ADJUSTED OR RECONSTRUCTED 17.4

TYPICAL BENCHING ON EXISTING EMBANKMENT

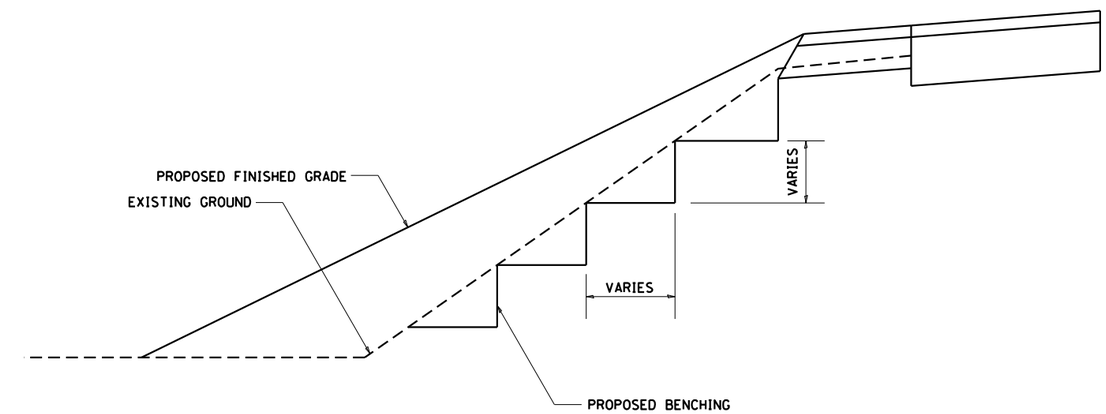

REVISED - 2-22-06

TYPICAL BENCHING ON EXISTING EMBANKMENT 50.4

PAVEMENT BREAKING DETAIL

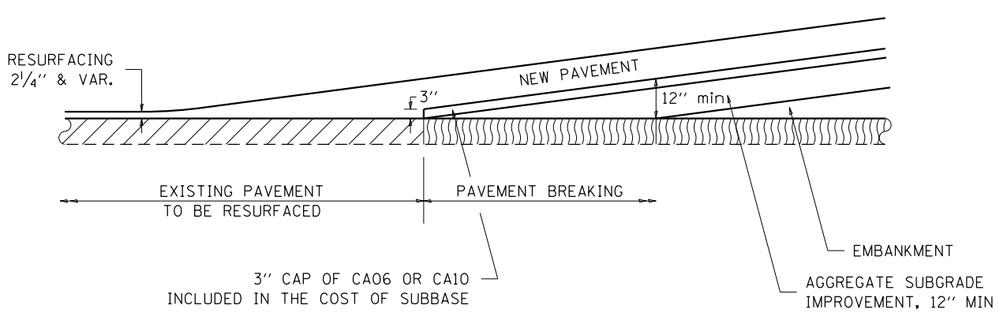

REVISED - 3-19-13

PAVEMENT BREAKING DETAIL 24.4

WILLETT HOFMANN & ASSOCIATES INC
ENGINEERING ARCHITECTURE LAND SURVEYING
809 EAST 2ND STREET, DIXON, IL 61021-0367
T: 815-284-3381 DESIGN FIRM: #184-000918

DESIGNED -	LGN	REVISED -	
CHECKED -	GFS	REVISED -	
DRAWN -	TBS	REVISED -	
CHECKED -	LGN	REVISED -	

WINNEBAGO COUNTY
F.A.P. 0412 (ALPINE RD) OVER FOREST HILLS RD
STATION 504+16.50

DISTRICT STANDARDS
STRUCTURE NO. 101-3068
SHEET NO. 1 OF 11 SHEETS

F.A.P. RTE.	SECTION	COUNTY	TOTAL SHEETS	SHEET NO.
412	16-00620-00-BR	WINNEBAGO	109	87
WHA# 1017D17		CONTRACT NO. 85704		
ILLINOIS	FED. AID PROJECT 7K29(857)			

TRAFFIC CONTROL AND PROTECTION AT TURN BAYS (TO REMAIN OPEN TO TRAFFIC)

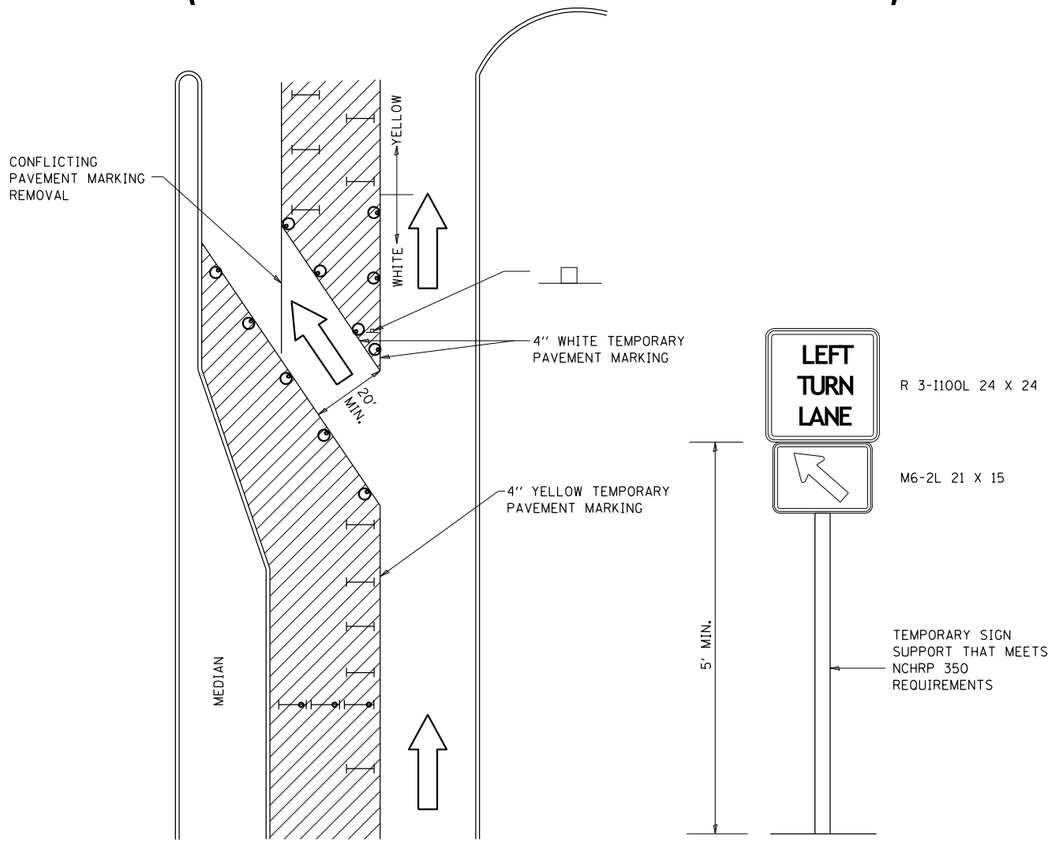

LEGEND

- WORK AREA
- LANE OPEN TO TRAFFIC
- TYPE I OR II BARRICADE OR DRUM WITH FLASHING BURNING LIGHT
- DRUM OR BARRICADE WITH STEADY BURN LIGHT
- SIGN (SEE DETAIL)
- TYPE I OR II CHECK BARRICADE WITH STEADY LIGHT BURN

REVISED - 10-14-11

GENERAL NOTES

CONES MAY BE SUBSTITUTED FOR BARRICADES OR DRUMS AT HALF THE SPACING DURING DAY OPERATIONS. CONES SHALL BE A MINIMUM OF 28 IN HEIGHT.

STEADY BURNING LIGHTS WILL NOT BE REQUIRED ON BARRICADES OR DRUMS FOR DAY OPERATIONS. ALL LIGHTS WILL BE MONODIRECTIONAL.

TEMPORARY PAVEMENT MARKING SHALL BE PLACED THROUGHOUT THE BARRICADED AREA OF EACH BAY WHERE THE CLOSURE TIME IS GREATER THAN FOURTEEN DAYS.

THIS APPLICATION ALSO APPLIES WHEN WORK IS BEING PERFORMED IN THE RIGHT LANE(S) AND THE RIGHT TURN BAY IS TO REMAIN OPEN. UNDER THIS CONDITION, "RIGHT TURN LANE" R3-100 24 X 24 AND M6-2R 21 X 15 SHALL BE USED.

THESE CONTROLS SHALL SUPPLEMENT MAINLINE TRAFFIC CONTROL FOR LANE CLOSURES. LONGITUDINAL DIMENSIONS MAY BE ADJUSTED TO FIT FIELD CONDITIONS.

TRAFFIC CONTROL AND PROTECTION AT TURN BAYS (TO REMAIN OPEN TO TRAFFIC) SHALL BE INCLUDED IN THE COST SPECIFIED TRAFFIC CONTROL STANDARDS OR ITEMS.

ALL DIMENSIONS ARE IN INCHES UNLESS OTHERWISE NOTED.

Traffic Control and Protection at Turn Bays (To Remain Open to Traffic) 94.2

WILLETT HOFMANN & ASSOCIATES INC
ENGINEERING ARCHITECTURE LAND SURVEYING
809 EAST 2ND STREET, DIXON, IL 61021-0367
T: 815-284-3381 DESIGN FIRM: #184-000918

DESIGNED - LGN	REVISED -		
CHECKED - GFS	REVISED -		
DRAWN - TBS	REVISED -		
CHECKED - LGN	REVISED -		

WINNEBAGO COUNTY
F.A.P. 0412 (ALPINE RD) OVER FOREST HILLS RD
STATION 504+16.50

DISTRICT STANDARDS
STRUCTURE NO. 101-3068
SHEET NO. 2 OF 11 SHEETS

F.A.P. RTE.	SECTION	COUNTY	TOTAL SHEETS	SHEET NO.
412	16-00620-00-BR	WINNEBAGO	109	88
	WHA* 1017D17	CONTRACT NO. 85704		
	ILLINOIS	FED. AID PROJECT 7K29(857)		

CONCRETE COLLARS FOR PIPE OR BOX CULVERT EXTENSIONS

Bill of Materials

	h bar	U bar dimensions				U_1 bar dimensions				REINF. BARS	EXPANSION BOLTS ¾"	CONCRETE COLLAR
	Quantity	X	Y	Length	Quantity	X	Z	Length	Quantity	LBS	EACH	Cu. Yds.
12" PIPE LT 501+49	2	1'-9"	1'-6"	4'-9"	4					15		0.43
12" PIPE RT 506+75	2	1'-9"	1'-6"	4'-9"	4					15		0.43
									Total	30		0.86

All h bars 18 Long

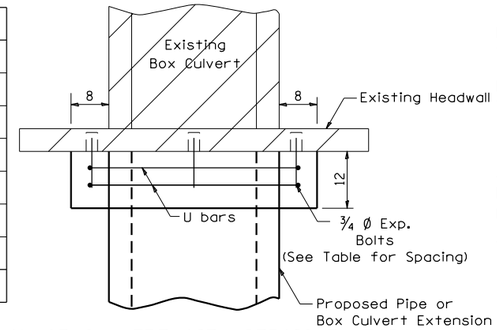

PLAN OF CULVERT WITH STRAIGHT HEADWALL

General Notes

Concrete Collars shall be constructed of Class SI Concrete in accordance with Section 503 of the Standard Specifications

Reinforcement bars shall conform to Section 508 of the Standard Specifications.

Expansion bolts shall be 3/4 Ø hooked bolts and shall conform to Section 540 of the Standard Specifications.

The concrete will be paid for at the contract unit price per cubic yard for CONCRETE COLLAR. Reinforcement will be paid for at the contract unit price per pound for REINFORCEMENT BARS. Expansion Bolts, when required, will be paid for at the contract unit price each for EXPANSION BOLTS ¾ inch, which price shall include furnishing, drilling holes, and installing the expansion bolts complete in place. These bolts shall extend at least 9 inches into the new concrete.

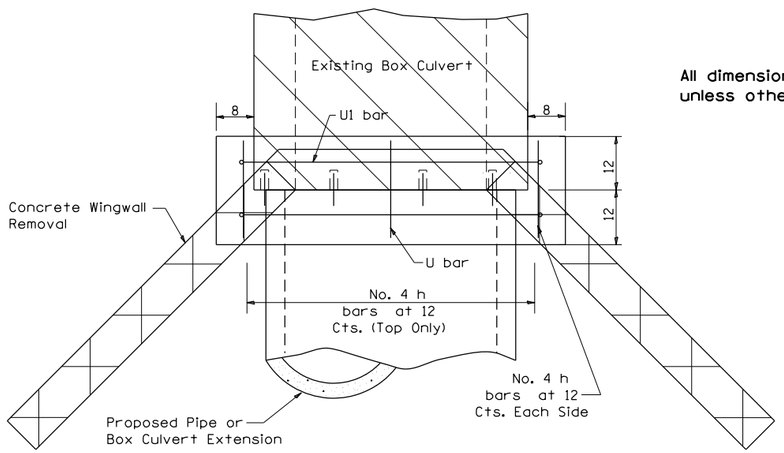

PLAN OF CULVERT WITH ANGLED WING WALLS

All dimensions are in inches unless otherwise noted.

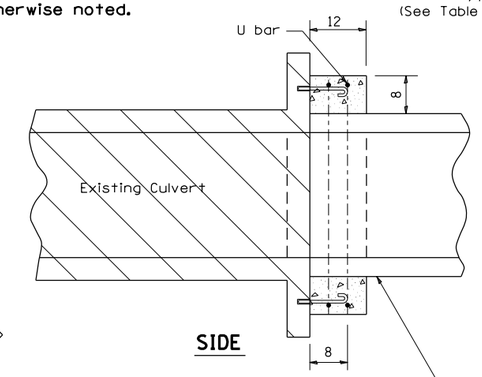

SIDE

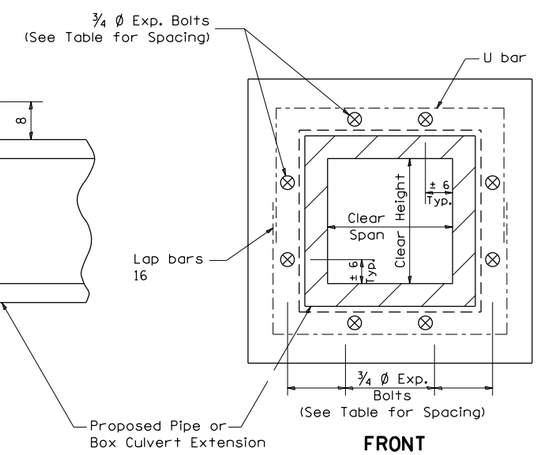

FRONT

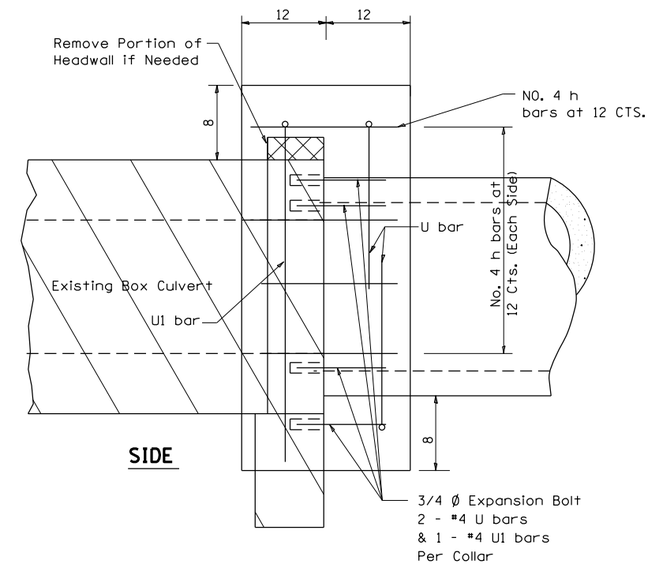

SIDE

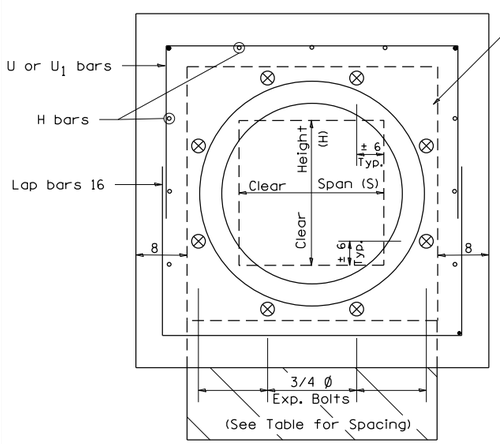

FRONT

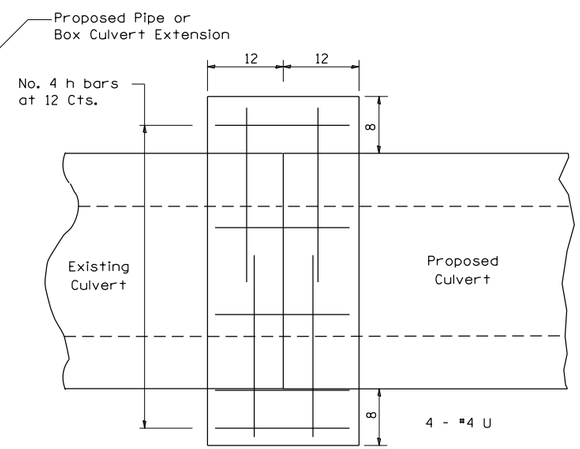

CULVERT CONNECTION WITHOUT EXISTING HEADWALL

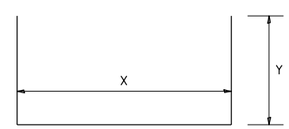

(#4) U bar

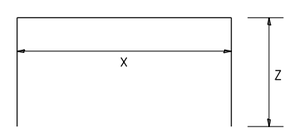

(#4) U_1 bar

PLACEMENT DETAILS FOR EXPANSION BOLTS

	NUMBER OF EXPANSION BOLTS REQUIRED PER SIDE			
	EXTENSIONS ≤ 15'		EXTENSIONS > 15'	
H or S	NUMBER *	SPACING	NUMBER *	SPACING
24	**	**	**	**
30	2	18	2	18
36	2	24	2	24
48	3	18	3	18
60	4	16	3	24
72	5	15	4	20
84	5	18	4	24
96	6	17	5	21
108	6	19	5	24
120	7	18	6	21
132	8	17	6	24
144	8	19	7	22

* Expansion bolts based on non-skewed culverts
** Minimum one expansion bolt at each corner

Example:
6' x 4' box culvert to be extended 18' at one end only.

From table find
6' side requires 4 - ¾" Ø expansion bolts at 20" cts.
4' side requires 3 - ¾" Ø expansion bolts at 18" cts.

Total Number required
(4+3)2 = 14 - ¾" Ø expansion bolts.

CONCRETE COLLARS FOR PIPE OR BOX CULVERT EXTENSIONS 33.1

WILLETT HOFMANN & ASSOCIATES INC
ENGINEERING ARCHITECTURE LAND SURVEYING
809 EAST 2ND STREET, DIXON, IL 61021-0367
T: 815-284-3381 DESIGN FIRM: #184-000918

DESIGNED - LGN	REVISED - 1-18-17	WINNEBAGO COUNTY	DISTRICT STANDARDS
CHECKED - GFS	REVISED - 1-05-16	F.A.P. 0412 (ALPINE RD) OVER FOREST HILLS RD	STRUCTURE NO. 101-3068
DRAWN - TBS	REVISED - 6-27-14	STATION 504+16.50	SHEET NO. 3 OF 11 SHEETS
CHECKED - LGN	REVISED - 10-17-11		

F.A.P. RTE.	SECTION	COUNTY	TOTAL SHEETS	SHEET NO.
412	16-00620-00-BR	WINNEBAGO	109	89
	WHA* 1017D17	CONTRACT NO. 85704		
	ILLINOIS	FED. AID PROJECT 7K29(857)		

WORK ZONE SIGN DETAILS

ILLINOIS STANDARD G20–I100

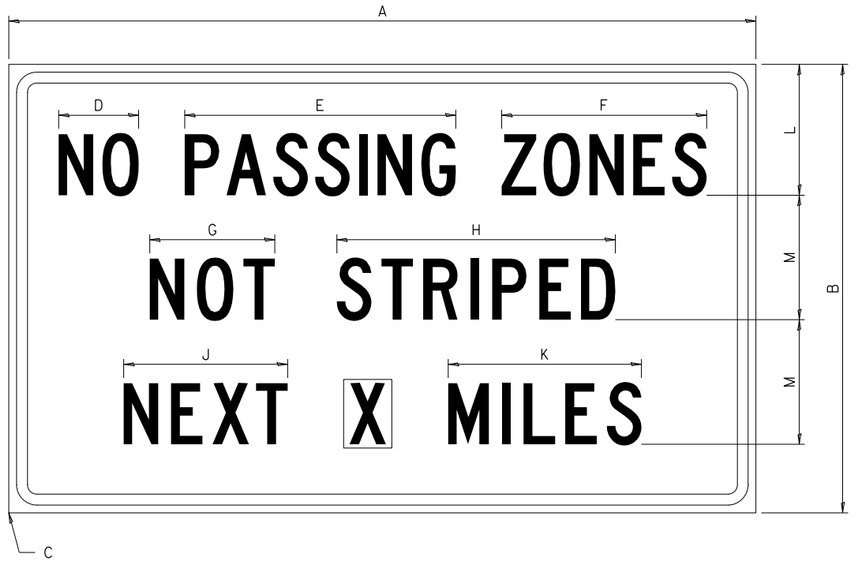

COLOR	LEGEND AND BORDER	BLACK
	BACKGROUND	ORANGE
		NON-REFLECTORIZED
		REFLECTORIZED

SIGN SIZE	DIMENSIONS											
	A	B	C	D	E	F	G	H	J	K	L	M
60 x 36	60.00	36.00	2.25	6.4	21.80	16.40	10.00	22.40	13.20	15.50	10.50	10.00

SIGN SIZE	SERIES BY LINE			MARGIN	BORDER
	1	2	3		
60 x 36	5C	5C	5C	0.625	0.875

Sign not to scale

ILLINOIS STANDARD W8–I107

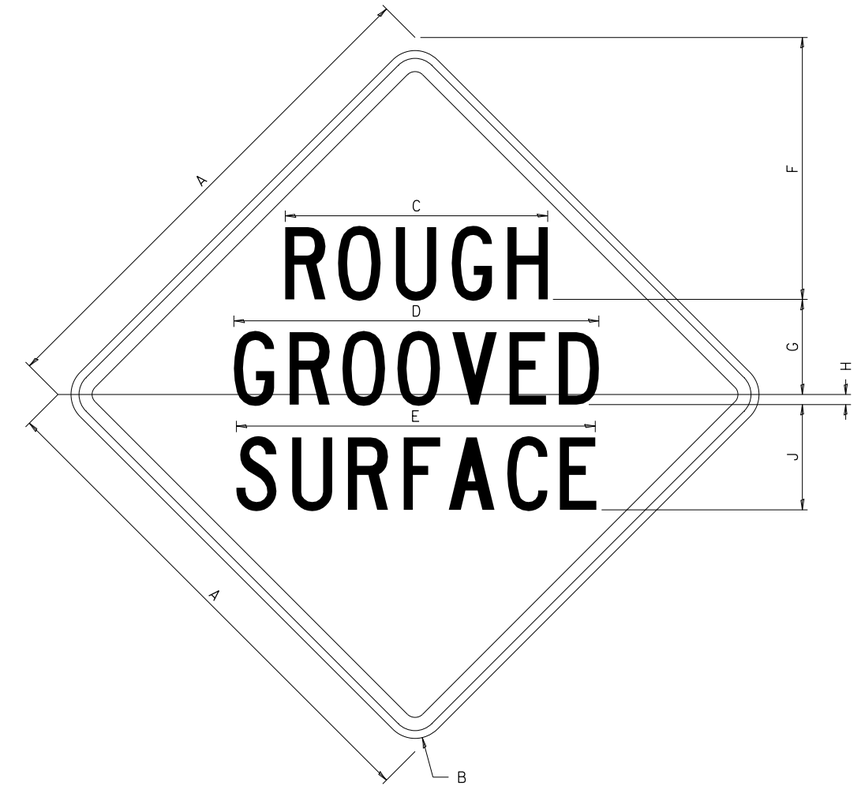

COLOR	LEGEND AND BORDER	BLACK
	BACKGROUND	ORANGE
		NON-REFLECTORIZED
		REFLECTORIZED

SIGN SIZE	DIMENSIONS								
	A	B	C	D	E	F	G	H	J
48 x 48	48.00	3.00	25.00	34.80	34.20	24.94	9.00	1.00	10.00

SIGN SIZE	SERIES BY LINE			MARGIN	BORDER
	1	2	3		
48 x 48	7C	7C	7C	1.250	0.750

Sign not to scale

GENERAL NOTES

All work to furnish and install these signs shall be included in the cost of the specified traffic control standards and shall not be paid separately.

All Illinois Standard signs shall conform to the latest edition of the "Illinois Standard Highway Signs Book" in effect on the date of invitation for bids.

Signs shall meet the applicable portions of Sections 701 and 720 of the Standard Specifications.

All dimensions are in inches unless otherwise noted.

WORK ZONE SIGN DETAILS SHEET 1 OF 4 34.1

WILLETT HOFMANN & ASSOCIATES INC
ENGINEERING ARCHITECTURE LAND SURVEYING
809 EAST 2ND STREET, DIXON, IL 61021-0367
T: 815-284-3381 DESIGN FIRM: #184-000918

DESIGNED - LGN	REVISED -	WINNEBAGO COUNTY	DISTRICT STANDARDS
CHECKED - GFS	REVISED -	F.A.P. 0412 (ALPINE RD) OVER FOREST HILLS RD	STRUCTURE NO. 101-3068
DRAWN - TBS	REVISED -	STATION 504+16.50	SHEET NO. 4 OF 11 SHEETS
CHECKED - LGN	REVISED -		

F.A.P. RTE.	SECTION	COUNTY	TOTAL SHEETS	SHEET NO.
412	16-00620-00-BR	WINNEBAGO	109	90
	WHA# 1017D17	CONTRACT NO. 85704		
	ILLINOIS	FED. AID PROJECT 7K29(857)		

WORK ZONE SIGN DETAILS

ILLINOIS STANDARD W12–I102

1

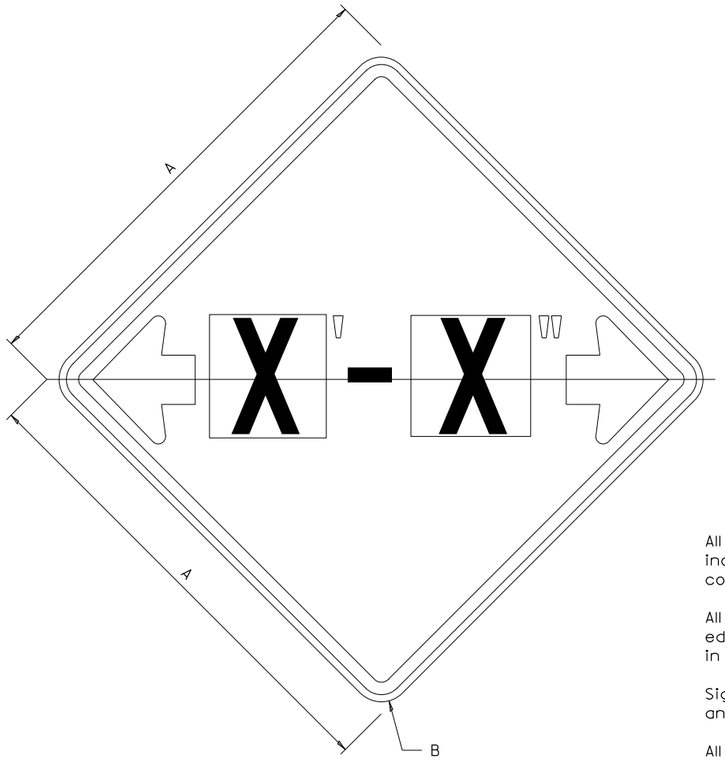

COLOR			
	LEGEND AND BORDER	BLACK	NON-REFLECTORIZED
	BACKGROUND	FL ORANGE	REFLECTORIZED

SIGN SIZE	DIMENSIONS	
	A	B
48 x 48	48.00	3.00

GENERAL NOTES

All work to furnish and install these signs shall be included in the cost of the specified traffic control standards and shall not be paid separately.

All Illinois Standard signs shall conform to the latest edition of the "Illinois Standard Highway Signs Book" in effect on the date of invitation for bids.

Signs shall meet the applicable portions of Sections 701 and 720 of the Standard Specifications.

All dimensions are in inches unless otherwise noted.

(1) Illinois Standard signs W12-I102 and W12-I103 shall be used as described in the special provisions.

SIGN SIZE	SERIES BY LINE	MARGIN	BORDER
	1		
48 x 48	12C	0.750	1.250

Sign not to scale

ILLINOIS STANDARD W12–I103

1

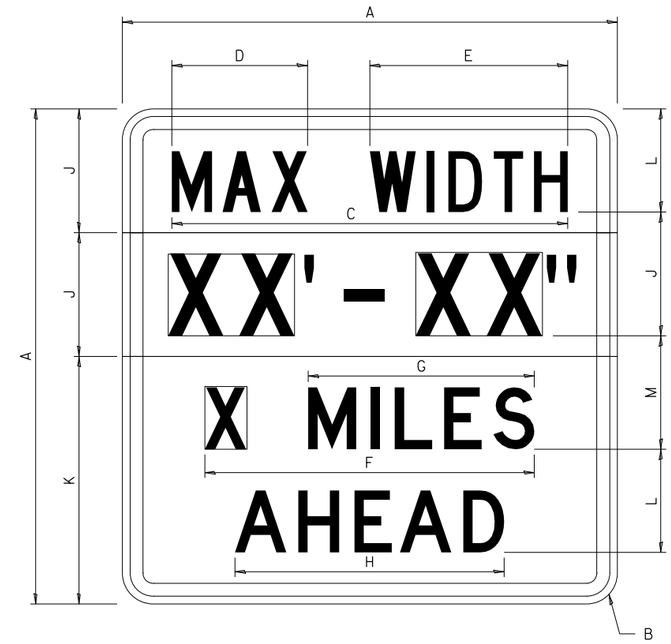

COLOR			
	LEGEND AND BORDER	BLACK	NON-REFLECTORIZED
	BACKGROUND	WHITE	REFLECTORIZED
	BACKGROUND (WIDTH)	FL ORANGE	REFLECTORIZED

SIGN SIZE	DIMENSIONS											
	A	B	C	D	E	F	G	H	J	K	L	M
48 x 48	48.00	3.00	38.40	13.20	19.20	32.00	22.00	26.20	12.00	24.00	10.00	11.00

SIGN SIZE	SERIES BY LINE				MARGIN	BORDER
	1	2	3	4		
48 x 48	6C	8D	6D	6D	0.750	1.250

Sign not to scale

XX'-XX" WIDTH AND X MILES ARE VARIABLE
TOP AND BOTTOM OF BACKGROUND WHITE

WORK ZONE SIGN DETAILS SHEET 2 OF 4 34.1

WILLETT HOFMANN & ASSOCIATES INC
ENGINEERING ARCHITECTURE LAND SURVEYING
809 EAST 2ND STREET, DIXON, IL 61021-0367
T: 815-284-3381 DESIGN FIRM: #184-000918

DESIGNED - LGN	REVISED -		
CHECKED - GFS	REVISED -		
DRAWN - TBS	REVISED -		
CHECKED - LGN	REVISED -		

WINNEBAGO COUNTY
F.A.P. 0412 (ALPINE RD) OVER FOREST HILLS RD
STATION 504+16.50

DISTRICT STANDARDS
STRUCTURE NO. 101-3068
SHEET NO. 5 OF 11 SHEETS

F.A.P. RTE.	SECTION	COUNTY	TOTAL SHEETS	SHEET NO.
412	16-00620-00-BR	WINNEBAGO	109	91
	WHA* 1017D17	CONTRACT NO. 85704		
	ILLINOIS FED. AID PROJECT 7K29(857)			

WORK ZONE SIGN DETAILS

ROAD CLOSED TO OVERSIZED LOADS

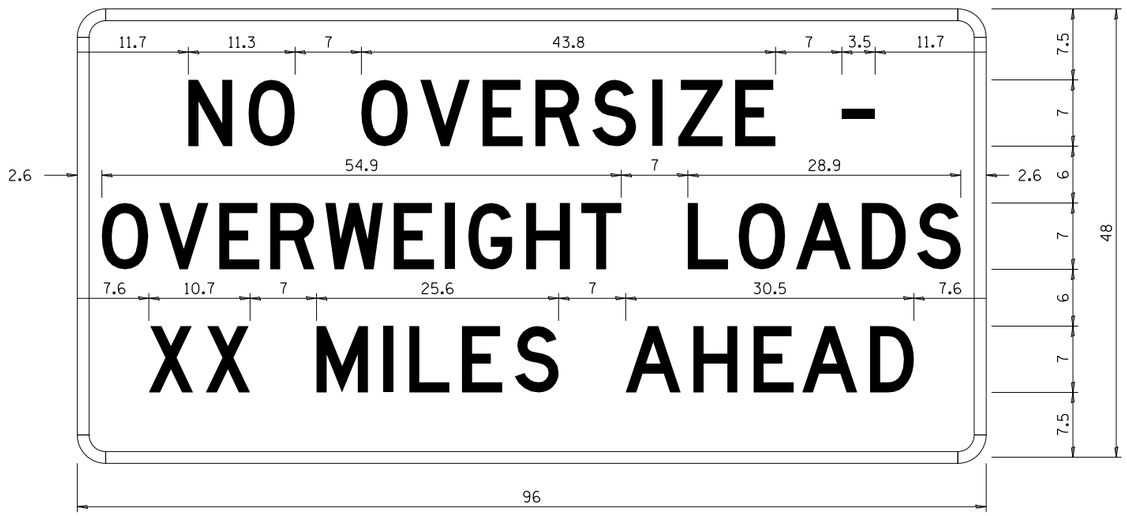

COLOR		
LEGEND AND BORDER	BLACK	NON-REFLECTORIZED
BACKGROUND	ORANGE	REFLECTORIZED

Permit Loads - Loads Over 13 Feet; 3.0" Radius, 1.3" Border;
[NO OVERSIZE -] D; [OVERWEIGHT LOADS] D 85% spacing; [XX MILES AHEAD] D;
Table of letter and object lefts.

N	O	O	V	E	R	S	I	Z	E	-
11.7	18.1	30.0	36.2	42.8	48.4	54.4	60.7	63.5	69.5	80.8

O	V	E	R	W	E	I	G	H	T	L	O	A	D	S
2.6	8.6	15.0	20.4	26.2	33.4	38.8	41.3	47.4	53.2	64.5	69.9	75.9	82.9	88.7

X	X	M	I	L	E	S	A	H	E	A	D
7.6	13.6	25.3	32.3	35.1	40.6	46.2	57.9	65.1	71.4	76.6	83.7

Sign not to scale

STOP LINE SIGN FOR TEMPORARY SIGNALS

COLOR		
LEGEND AND BORDER	BLACK	NON-REFLECTORIZED
BACKGROUND	WHITE	REFLECTORIZED

SIGN SIZE	SERIES BY LINE		
	1	2	3
24 x 24	4C	4C	4C

Sign not to scale

GENERAL NOTES

All work to furnish and install these signs shall be included in the cost of the specified traffic control standards and shall not be paid separately.

All Illinois Standard signs shall conform to the latest edition of the "Illinois Standard Highway Signs Book" in effect on the date of invitation for bids.

Signs shall meet the applicable portions of Sections 701 and 720 of the Standard Specifications.

All dimensions are in inches unless otherwise noted.

WORK ZONE SIGN DETAILS SHEET 3 OF 4 34.1

WILLETT HOFMANN & ASSOCIATES INC
ENGINEERING ARCHITECTURE LAND SURVEYING
809 EAST 2ND STREET, DIXON, IL 61021-0367
T: 815-284-3381 DESIGN FIRM: #184-000918

DESIGNED - LGN	REVISED -	WINNEBAGO COUNTY	DISTRICT STANDARDS
CHECKED - GFS	REVISED -	F.A.P. 0412 (ALPINE RD) OVER FOREST HILLS RD	STRUCTURE NO. 101-3068
DRAWN - TBS	REVISED -	STATION 504+16.50	SHEET NO. 6 OF 11 SHEETS
CHECKED - LGN	REVISED -		

F.A.P. RTE.	SECTION	COUNTY	TOTAL SHEETS	SHEET NO.
412	16-00620-00-BR	WINNEBAGO	109	92
WHA* 1017D17		CONTRACT NO. 85704		
ILLINOIS	FED. AID PROJECT 7K29(857)			

WORK ZONE SIGN DETAILS

ENTRANCE SIGN FOR USE WITH TEMPORARY SIGNALS

(2)

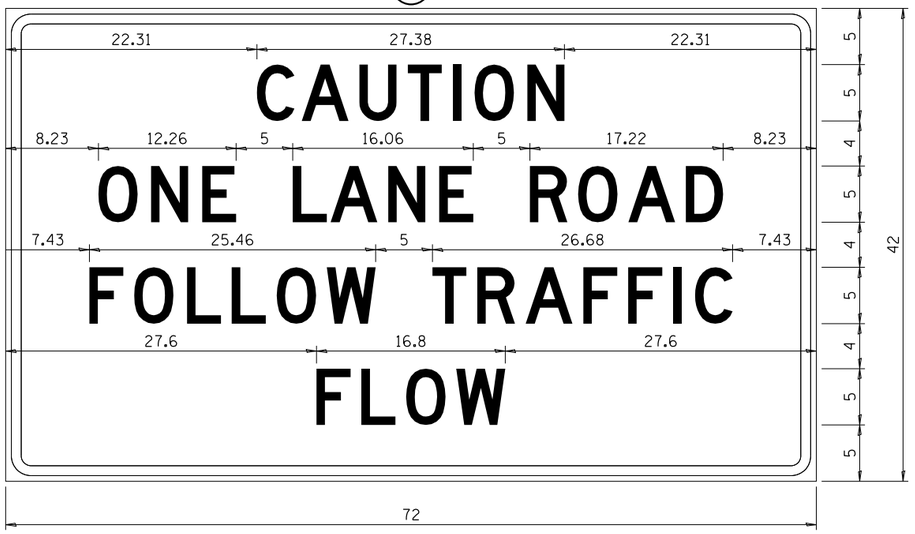

COLOR	LEGEND AND BORDER	BLACK	NON-REFLECTORIZED
	BACKGROUND	ORANGE	REFLECTORIZED

2.25" Radius, 0.88" Border, 0.50" IndenT;
[CAUTION] D; [ONE LANE ROAD] D;
[FOLLOW TRAFFIC] D; [FLOW] D

(2) This sign shall be installed at entrances located between the temporary signals as shown in the staging plans.

Table Of Widths And Spaces

22.31	C 3.36	0.62	A 4.18	0.94	U 3.36	0.94	T 3.04	0.94	I 0.78	1.17	O 3.52	1.17	N 3.36	22.31

8.23	O 3.51	1.17	N 3.36	1.18	E 3.04

5.00	L 3.05	0.31	A 4.18	0.94	N 3.36	1.17	E 3.05

5.00	R 3.36	0.93	O 3.52	0.94	A 4.18	0.93	D 3.36	8.23

7.43	F 3.04	0.94	O 3.52	1.17	L 3.04	0.94	L 3.05	0.94	O 3.51	0.94	W 4.37

5.00	T 3.05	0.94	R 3.36	0.94	A 4.18	0.93	F 3.05	0.94	F 3.04	0.94	I 0.78	1.18	C 3.35	7.43

27.60	F 3.05	0.94	L 3.04	0.94	O 3.52	0.93	W 4.38	27.60

Sign not to scale

GENERAL NOTES

All work to furnish and install these signs shall be included in the cost of the specified traffic control standards and shall not be paid separately.

All Illinois Standard signs shall conform to the latest edition of the "Illinois Standard Highway Signs Book" in effect on the date of invitation for bids.

Signs shall meet the applicable portions of Sections 701 and 720 of the Standard Specifications.

All dimensions are in inches unless otherwise noted.

STAY IN YOUR LANE

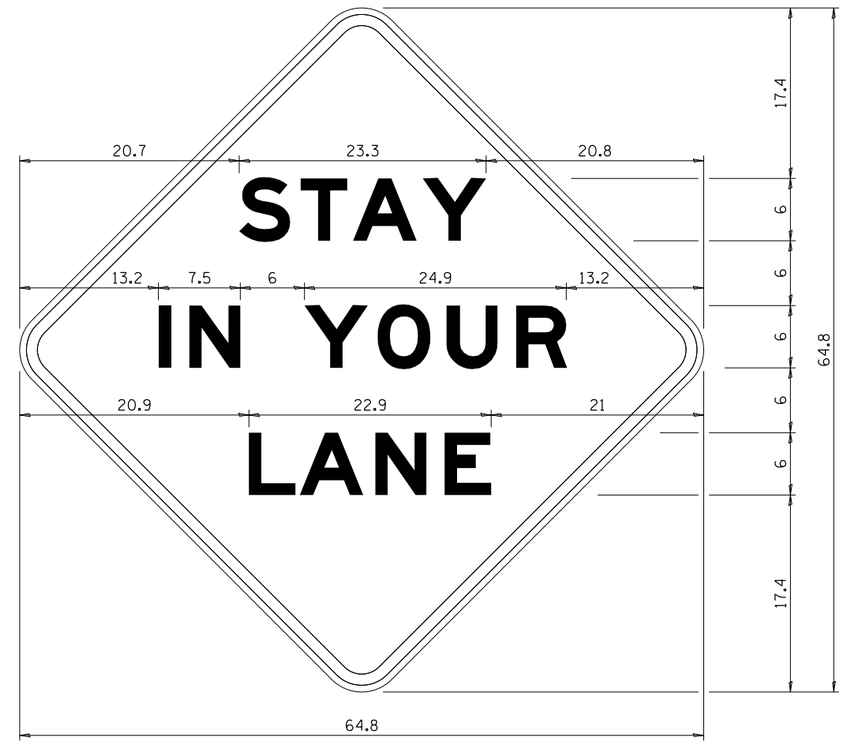

COLOR	LEGEND AND BORDER	BLACK	NON-REFLECTORIZED
	BACKGROUND	ORANGE	REFLECTORIZED

48.0" across sides 3.8" Radius, 1.0" Border, 0.6" Indent;
"STAY" E Mod; "IN YOUR" E Mod; "LANE" E Mod;

Table of Letter and Object Lefts

S 20.7	T 26.8	A 31.6	Y 38.0

I 13.2	N 15.9	Y 26.7	O 33.9	U 40.5	R 46.8

L 20.9	A 25.8	N 33.1	E 39.4

Sign not to scale

WORK ZONE SIGN DETAILS SHEET 4 OF 4 34.1

WILLETT HOFMANN & ASSOCIATES INC
ENGINEERING ARCHITECTURE LAND SURVEYING
809 EAST 2ND STREET, DIXON, IL 61021-0367
T: 815-284-3381 DESIGN FIRM: #184-000918

DESIGNED - LGN	REVISED -		
CHECKED - GFS	REVISED -		
DRAWN - TBS	REVISED -		
CHECKED - LGN	REVISED -		

WINNEBAGO COUNTY
F.A.P. 0412 (ALPINE RD) OVER FOREST HILLS RD
STATION 504+16.50

DISTRICT STANDARDS
STRUCTURE NO. 101-3068
SHEET NO. 7 OF 11 SHEETS

F.A.P. RTE.	SECTION	COUNTY	TOTAL SHEETS	SHEET NO.
412	16-00620-00-BR	WINNEBAGO	109	93
	WHA# 1017D17	CONTRACT NO. 85704		
		ILLINOIS FED. AID PROJECT 7K29(857)		

TRAFFIC CONTROL FOR ROAD CLOSURE

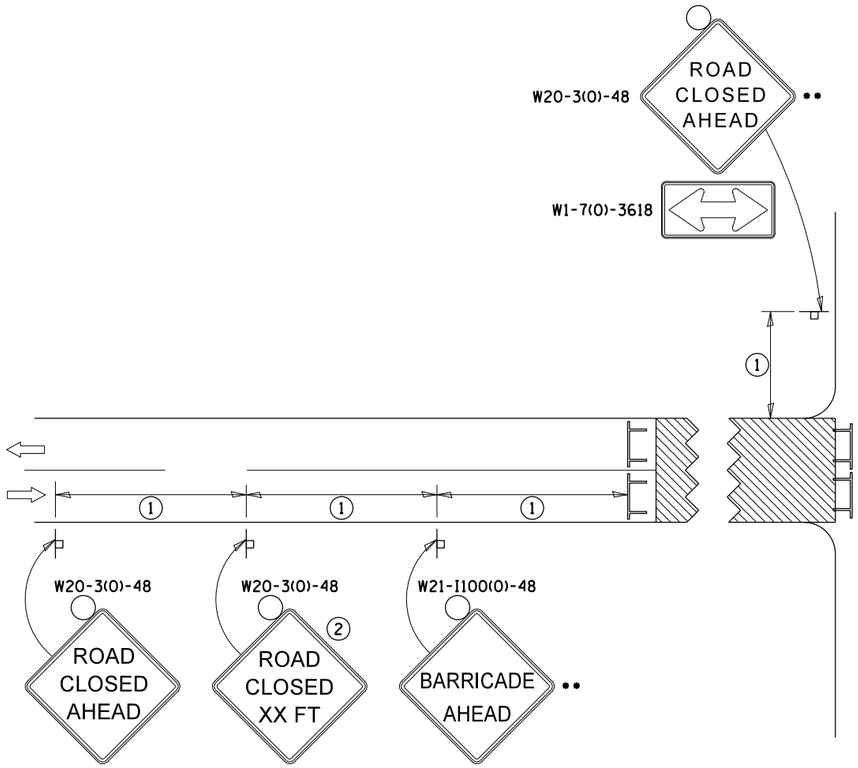

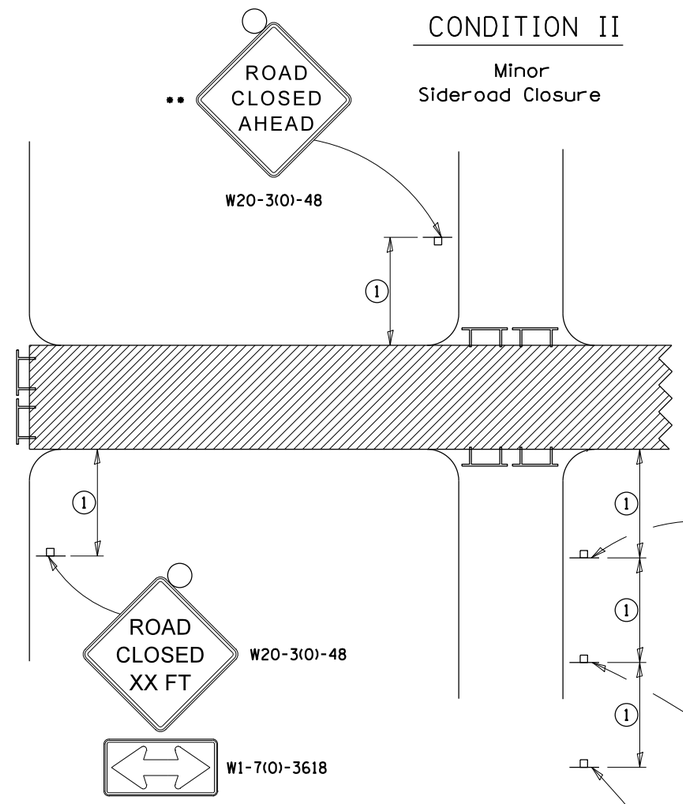

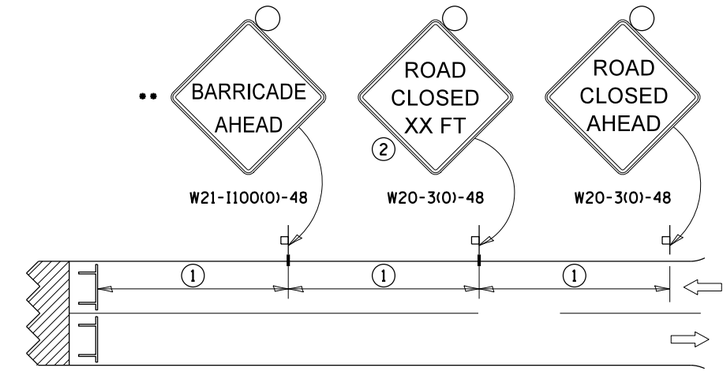

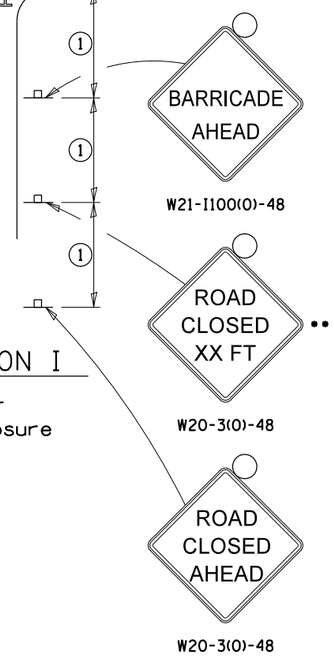

CONDITION I

Major
Sideroad Closure

SYMBOLS

- Work area
- Type III Barricade with Flashers
- Sign with flashing light

① SIGN SPACING TABLE

Posted Speed	Sign Spacing
45 MPH and above	500'
Below 45 MPH	250'

② SIGN LEGEND

Posted Speed Limit	Distance
45 MPH and above	1000'
Below 45 MPH	500'

ROAD CLOSED TO THRU TRAFFIC BARRICADE SET UP

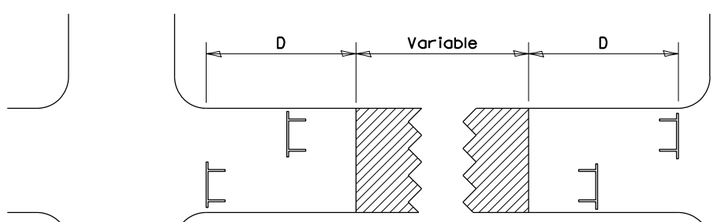

Type III Barricades and R11-4-4830 signs shall be as shown in "Road Closed To Thru Traffic" detail on Highway Standard 701901. If the distance "D" exceeds 2000' an additional set of barricades and R11-4-4830 shall be placed at each end of the work area.

GENERAL NOTES

Longitudinal dimensions may be adjusted to fit field conditions.

Side roads requiring all three signs as shown in CONDITION I (Major Sideroad Closure), shall be listed in the special provision.

•• Where local access is to be maintained, barricades are to be set up as shown in "Road Closed To Thru Traffic". Type III Barricades and R11-2-4830 signs shall be as shown in "Road Closed To All Traffic" detail on Highway Standard 701901.

All dimensions are in inches unless otherwise shown.

TRAFFIC CONTROL FOR ROAD CLOSURE **40.1**

WILLETT HOFMANN & ASSOCIATES INC
ENGINEERING ARCHITECTURE LAND SURVEYING
809 EAST 2ND STREET, DIXON, IL 61021-0367
T: 815-284-3381 DESIGN FIRM: #184-000918

DESIGNED - LGN	REVISED - 8-03-17	WINNEBAGO COUNTY	DISTRICT STANDARDS
CHECKED - GFS	REVISED - 1-05-16	F.A.P. 0412 (ALPINE RD) OVER FOREST HILLS RD	STRUCTURE NO. 101-3068
DRAWN - TBS	REVISED - 8-27-13	STATION 504+16.50	SHEET NO. 8 OF 11 SHEETS
CHECKED - LGN	REVISED - 10-17-11		

F.A.P. RTE.	SECTION	COUNTY	TOTAL SHEETS	SHEET NO.
412	16-00620-00-BR	WINNEBAGO	109	94
WHA# 1017D17		CONTRACT NO. 85704		
		ILLINOIS FED. AID PROJECT 7K29(857)		

TYPICAL PAVEMENT MARKINGS

TYPICAL PAVEMENT MARKING FOR FLUSH MEDIAN AT LEFT TURN LANE

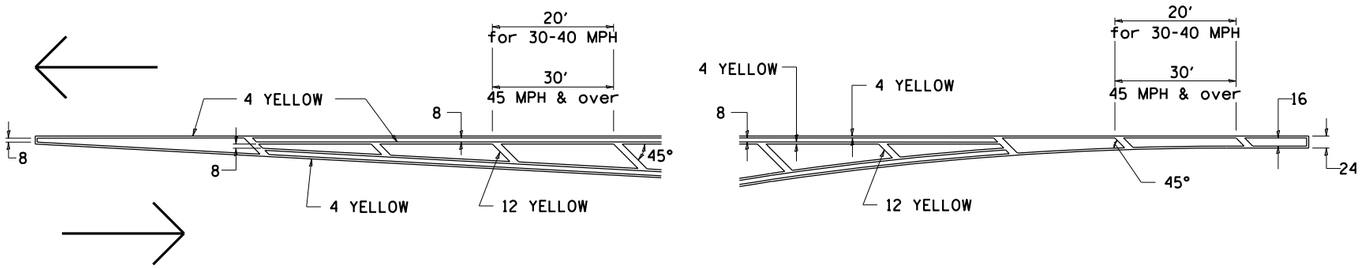

MEDIAN PAVEMENT MARKING

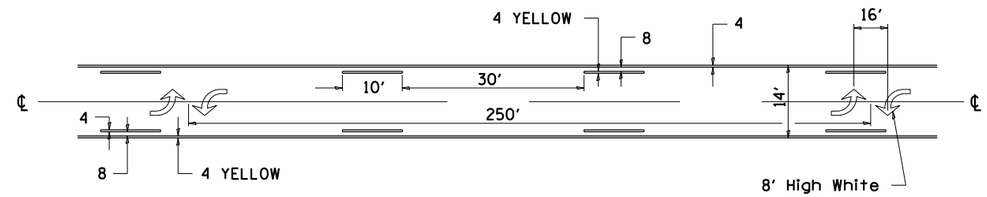

•• ALL DIMENSIONS ARE IN INCHES UNLESS OTHERWISE NOTED.

TYPICAL ISLAND OFFSET SHOULDER WIDTH

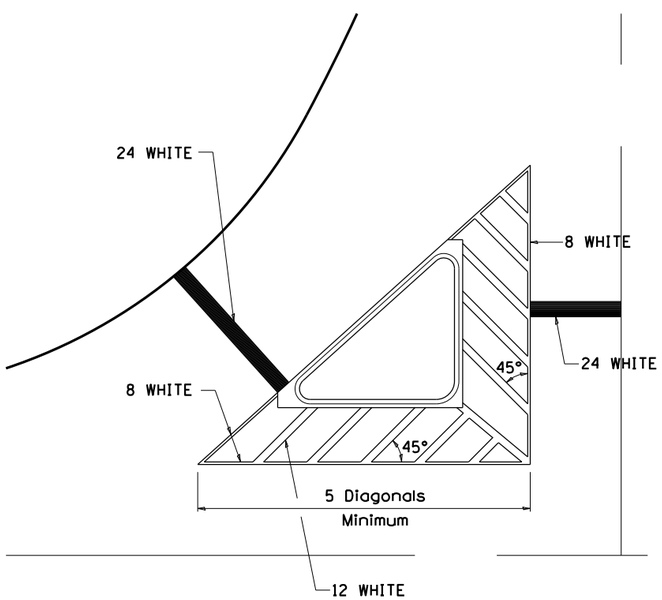

TYPICAL MARKING FOR PAINTED ISLANDS

NOTE:
* 45° TO LOCAL TAN.

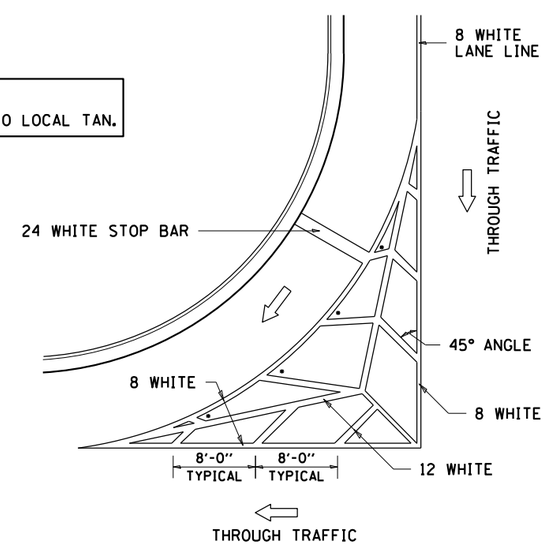

STANDARD CROSSWALK MARKING

See Schedules for Locations

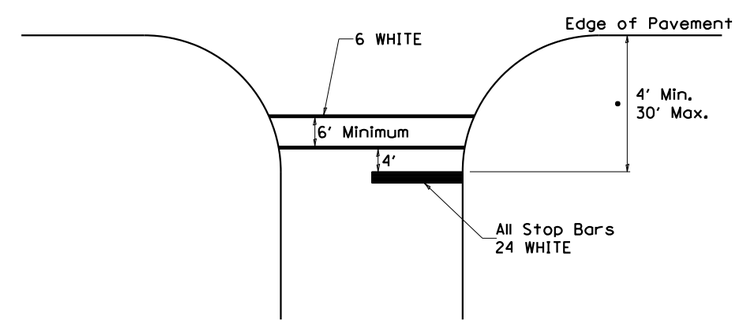

• Distance to the nearest edge of the intersecting roadway in the absence of a marked crosswalk.

TYPICAL PAVEMENT MARKINGS SHEET 1 OF 3 41.1

WILLETT HOFMANN & ASSOCIATES INC
ENGINEERING ARCHITECTURE LAND SURVEYING
809 EAST 2ND STREET, DIXON, IL 61021-0367
T: 815-284-3381 DESIGN FIRM: #184-000918

DESIGNED - LGN	REVISED - 6-27-14		
CHECKED - GFS	REVISED - 3-05-12		
DRAWN - TBS	REVISED -		
CHECKED - LGN	REVISED -		

WINNEBAGO COUNTY
F.A.P. 0412 (ALPINE RD) OVER FOREST HILLS RD
STATION 504+16.50

DISTRICT STANDARDS
STRUCTURE NO. 101-3068
SHEET NO. 9 OF 11 SHEETS

F.A.P. RTE.	SECTION	COUNTY	TOTAL SHEETS	SHEET NO.
412	16-00620-00-BR	WINNEBAGO	109	95
WHA# 1017D17		CONTRACT NO. 85704		
ILLINOIS FED. AID PROJECT 7K29(857)				

TYPICAL PAVEMENT MARKINGS

ARROW LAYOUT

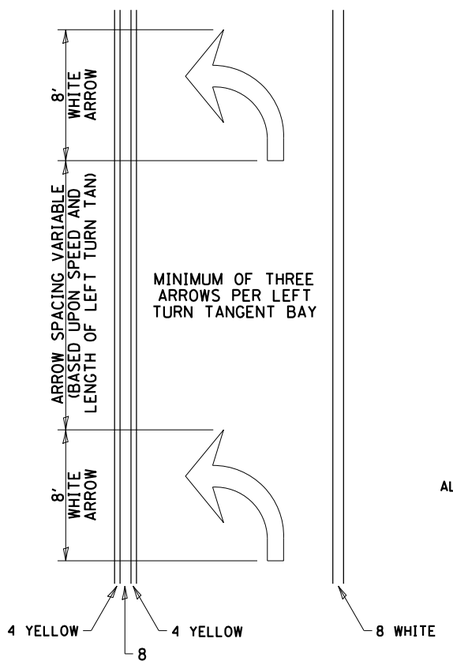

◁ ONE-WAY AMBER MARKER

◁ ONE-WAY CRYSTAL MARKER

◇ TWO-WAY AMBER MARKER

ALL DIMENSIONS ARE IN INCHES UNLESS OTHERWISE NOTED.

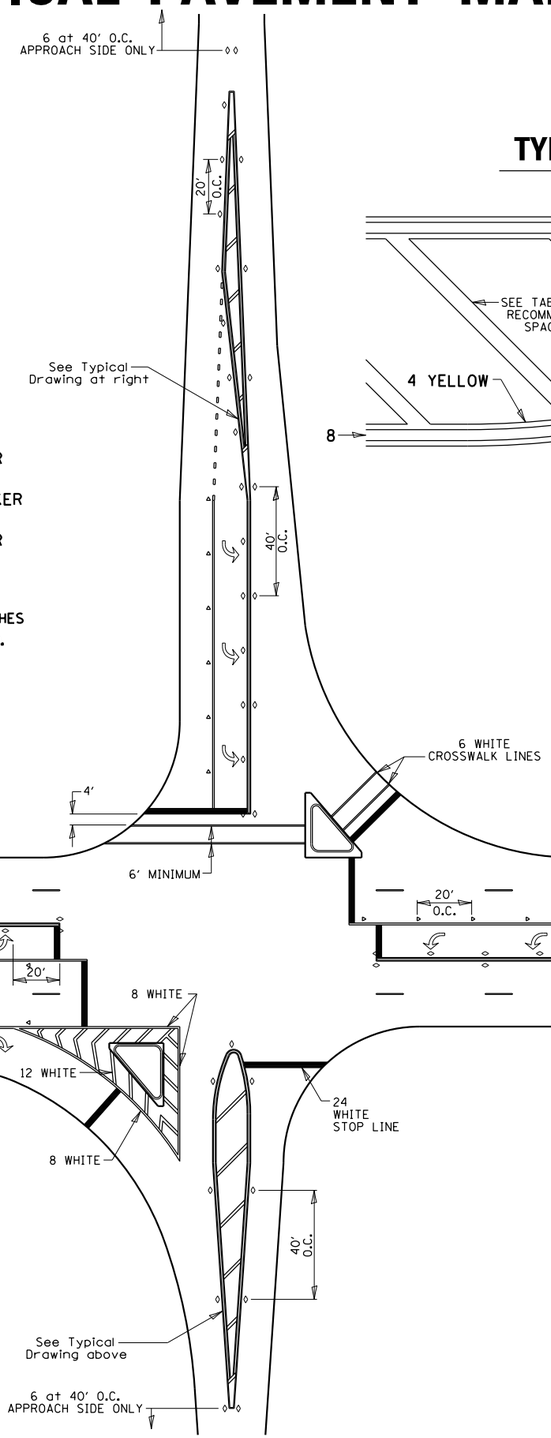

TYPICAL PAVEMENT MARKING FOR FLUSH MEDIAN

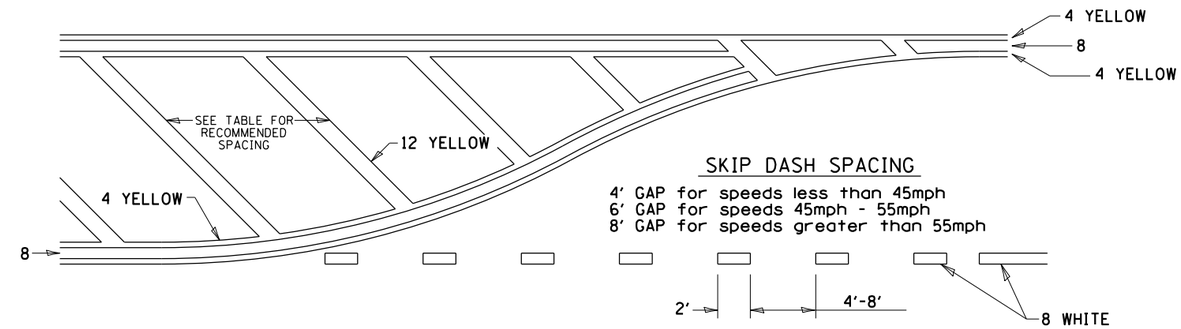

SKIP DASH SPACING

4' GAP for speeds less than 45mph
6' GAP for speeds 45mph - 55mph
8' GAP for speeds greater than 55mph

RECOMMENDED SPACING BETWEEN DIAGONALS (IN FEET)

Speed Limit Range	Continuous Median Area	Intersection Channelization	Objects (Islands)
less than 30MPH	50'	15'	10'
30-40MPH	75'	20'	15'
45MPH & over	75'	30'	20'

NOTE: if the spacing recommended in the Table does not permit at least five diagonal lines in the area being marked, the spacing from the next lowest speed range should be used. The recommended spacing is measured parallel to the pavement center line.

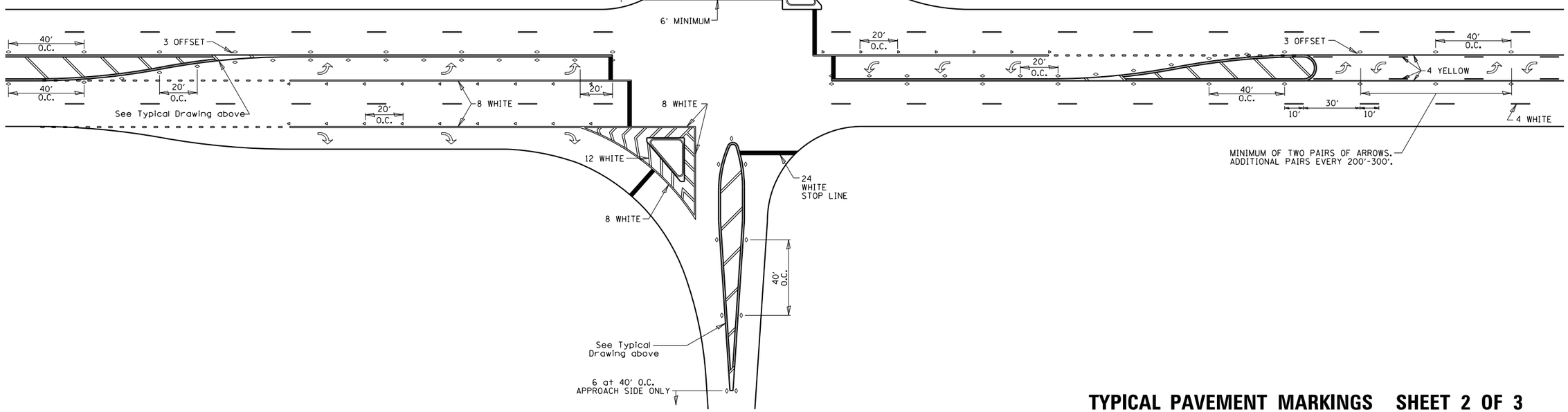

TYPICAL PAVEMENT MARKINGS SHEET 2 OF 3 **41.1**

WILLETT HOFMANN & ASSOCIATES INC
ENGINEERING ARCHITECTURE LAND SURVEYING
809 EAST 2ND STREET, DIXON, IL 61021-0367
T: 815-284-3381 DESIGN FIRM: #184-000918

DESIGNED - LGN	REVISED - 6-27-14		
CHECKED - GFS	REVISED - 3-05-12		
DRAWN - TBS	REVISED -		
CHECKED - LGN	REVISED -		

WINNEBAGO COUNTY
F.A.P. 0412 (ALPINE RD) OVER FOREST HILLS RD
STATION 504+16.50

DISTRICT STANDARDS
STRUCTURE NO. 101-3068
SHEET NO. 10 OF 11 SHEETS

F.A.P. RTE.	SECTION	COUNTY	TOTAL SHEETS	SHEET NO.
412	16-00620-00-BR	WINNEBAGO	109	96
WHA# 1017D17		CONTRACT NO. 85704		
ILLINOIS	FED. AID PROJECT 7K29(857)			

TYPICAL PAVEMENT MARKINGS

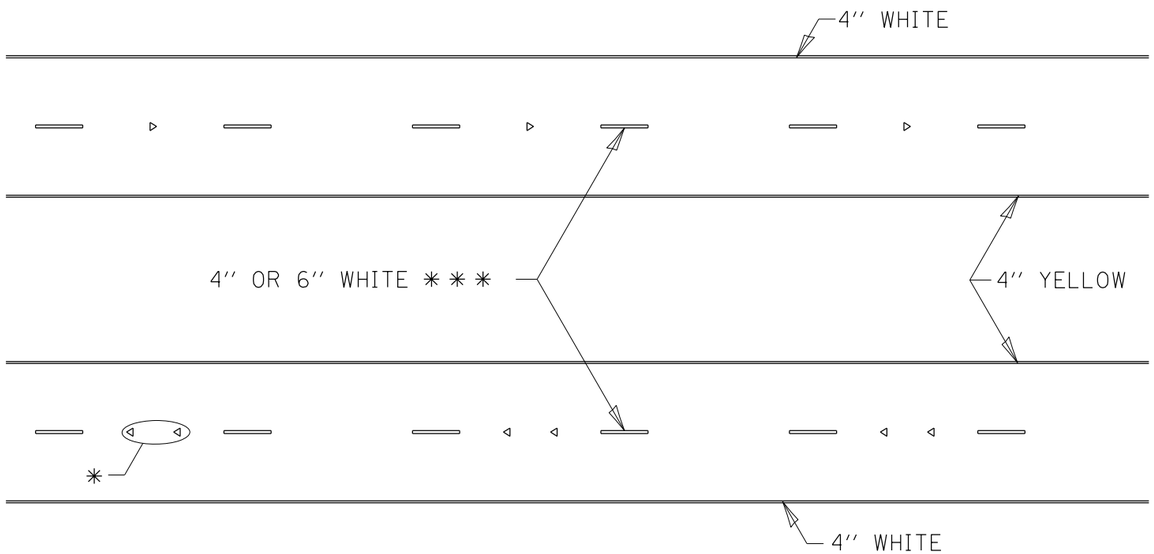

✳ SEE HIGHWAY STANDARD 781001 FOR SPACING DETAILS.
USE DOUBLE MARKERS WHEN ADT > 20,000.

MULTI–LANE / DIVIDED

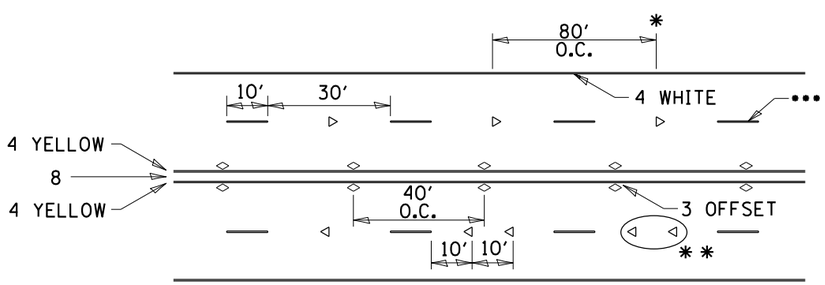

SYMBOLS

- REDUCE TO 40' O.C. ON CURVES WHERE ADVISORY SPEEDS ARE 10 MPH LOWER THAN POSTED SPEEDS.

•• USE DOUBLE MARKERS WHEN ADT ≥ 20,000

••• CENTERLINE SKIP DASH PAVEMENT MARKING SPEED LIMIT LESS THAN 40 MPH USE 4'' LINE. SPEED LIMIT 40 MPH AND OVER USE 6'' LINE.

MULTI–LANE / UNDIVIDED & ONE WAY

(FOR MULTI-LANE UNDIVIDED HIGHWAYS USE THIS DETAIL NOT HIGHWAY STANDARD 781001)

TYPICAL PARKING SPACING

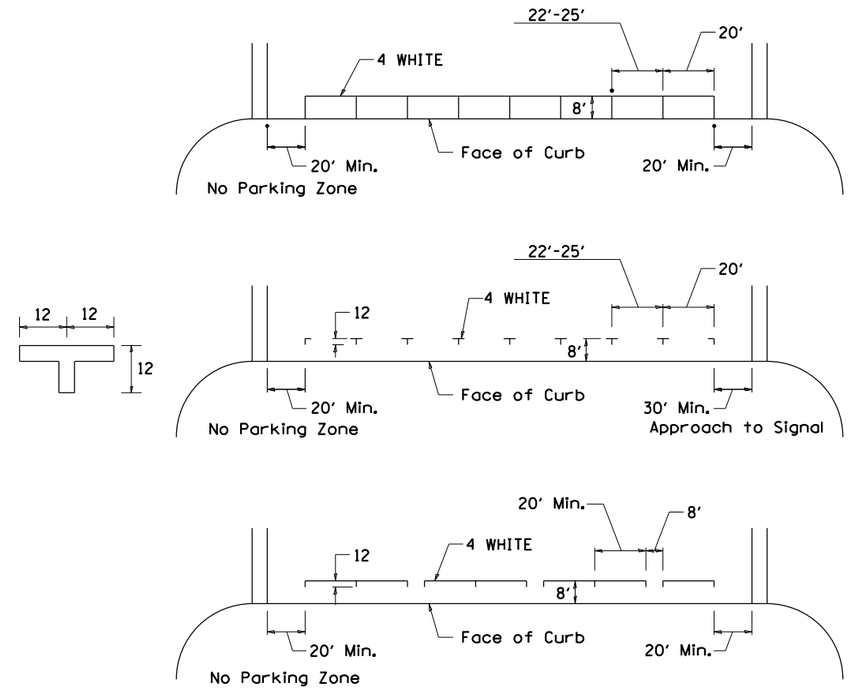

TYPICAL PAVEMENT MARKING FOR TWO LANE SECTION – NO PASSING ZONES

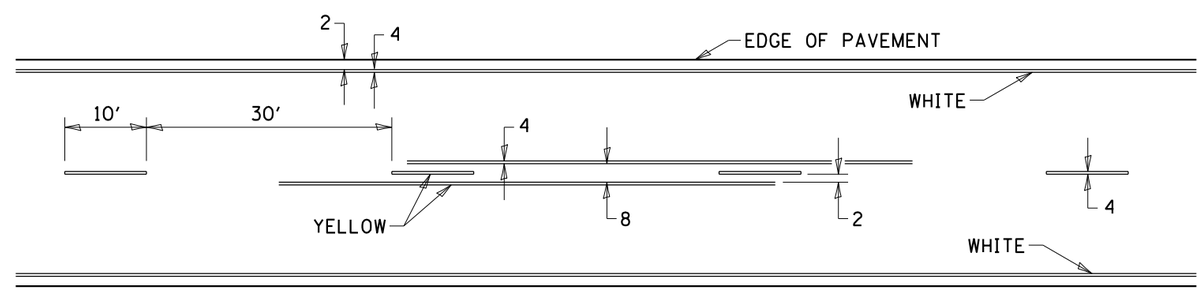

TYPICAL PAVEMENT MARKINGS SHEET 3 OF 3 41.1

WILLETT HOFMANN & ASSOCIATES INC — ENGINEERING ARCHITECTURE LAND SURVEYING — 809 EAST 2ND STREET, DIXON, IL 61021-0367 — T: 815-284-3381 DESIGN FIRM: #184-000918	DESIGNED - LGN	REVISED - 6-27-14	WINNEBAGO COUNTY F.A.P. 0412 (ALPINE RD) OVER FOREST HILLS RD STATION 504+16.50	DISTRICT STANDARDS STRUCTURE NO. 101-3068 SHEET NO. 11 OF 11 SHEETS	F.A.P. RTE. 412 / SECTION 16-00620-00-BR / COUNTY WINNEBAGO / TOTAL SHEETS 109 / SHEET NO. 97
	CHECKED - GFS	REVISED - 8-27-13			WHA* 1017D17 — CONTRACT NO. 85704
	DRAWN - TBS	REVISED - 11-28-12			ILLINOIS FED. AID PROJECT 7K29(857)
	CHECKED - LGN	REVISED -			

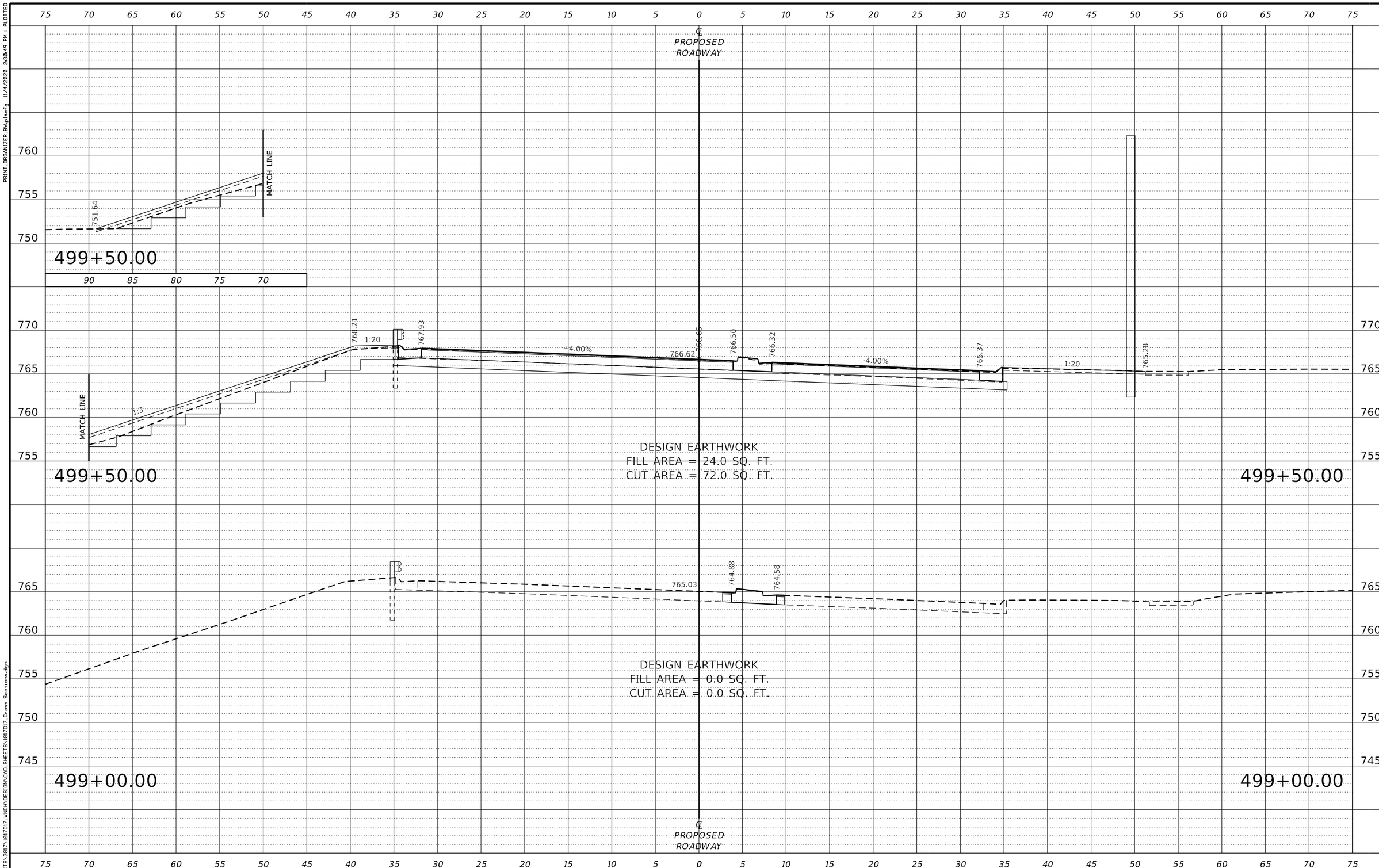

WILLETT HOFMANN & ASSOCIATES INC
ENGINEERING ARCHITECTURE LAND SURVEYING
809 EAST 2ND STREET, DIXON, IL 61021-0367
T: 815-284-3381 DESIGN FIRM: #184-000918

DESIGNED - LGN	REVISED -		
CHECKED - GFS	REVISED -		
DRAWN - TBS	REVISED -		
CHECKED - LGN	REVISED -		

WINNEBAGO COUNTY
F.A.P. 0412 (ALPINE RD) OVER FOREST HILLS RD
STATION 504+16.50

CROSS SECTIONS
STRUCTURE NO. 101-3068

SHEET NO. 1 OF 12 SHEETS

F.A.P. RTE.	SECTION	COUNTY	TOTAL SHEETS	SHEET NO.
412	16-00620-00-BR	WINNEBAGO	109	98
	WHA# 1017D17	CONTRACT NO. 85704		
		ILLINOIS FED. AID PROJECT 7K29(857)		

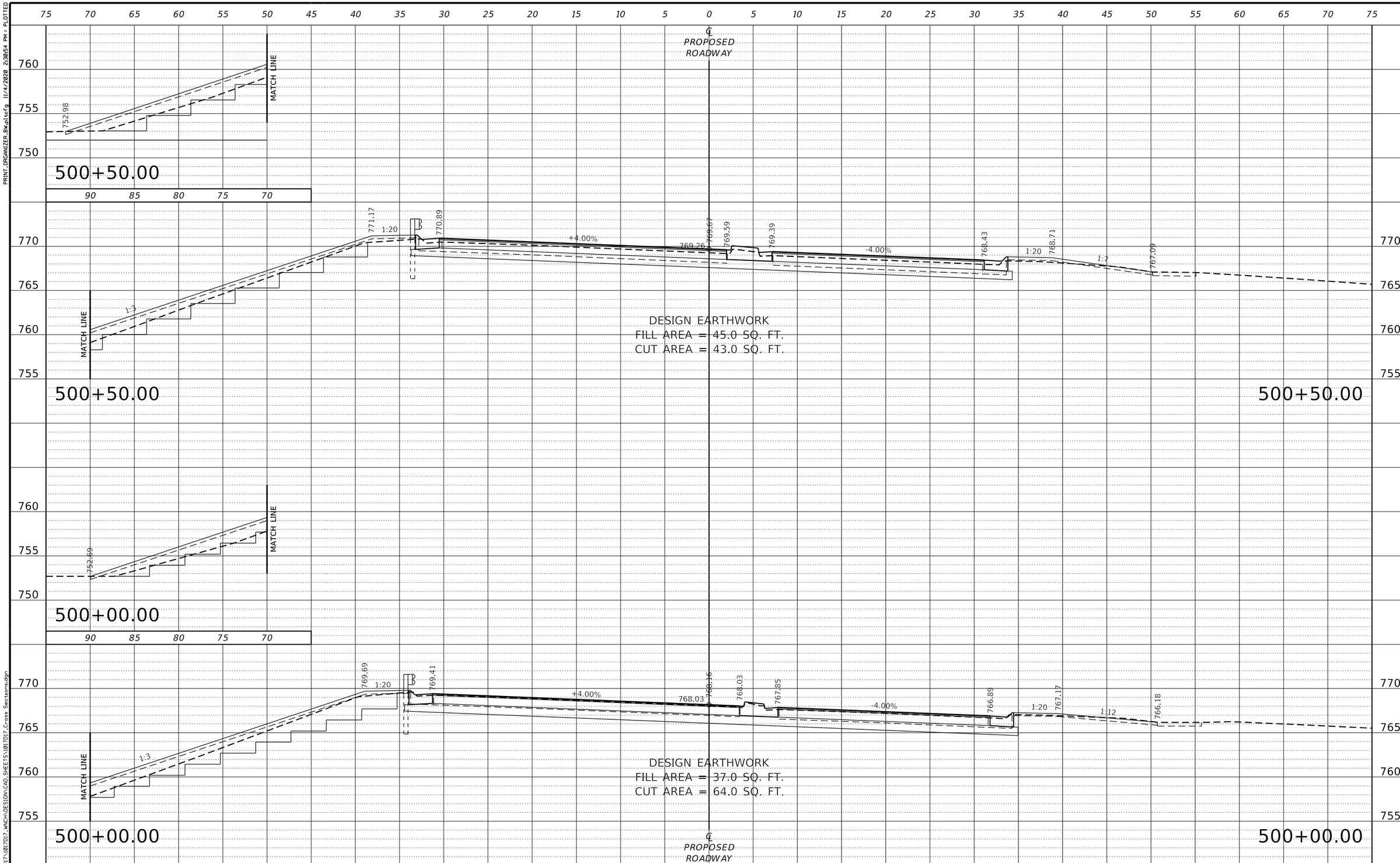

WILLETT HOFMANN & ASSOCIATES INC
ENGINEERING ARCHITECTURE LAND SURVEYING
809 EAST 2ND STREET, DIXON, IL 61021-0367
T: 815-284-3381 DESIGN FIRM#: #184-000918

DESIGNED - LGN	REVISED -		
CHECKED - GFS	REVISED -		
DRAWN - TBS	REVISED -		
CHECKED - LGN	REVISED -		

WINNEBAGO COUNTY
F.A.P. 0412 (ALPINE RD) OVER FOREST HILLS RD
STATION 504+16.50

CROSS SECTIONS
STRUCTURE NO. 101-3068
SHEET NO. 2 OF 12 SHEETS

F.A.P. RTE.	SECTION	COUNTY	TOTAL SHEETS	SHEET NO.
412	16-00620-00-BR	WINNEBAGO	109	99
WHA# 1017D17		CONTRACT NO. 85704		
ILLINOIS	FED. AID PROJECT 7K29(857)			

PRINT_ORGANIZER_BW.pltcfg 11/4/2020 2:30:54 PM = PLOTTED

FILE = S:\PROJECTS\2017\1017D17_WNCH\DESIGN\CAD_SHEETS\1017D17_Cross Sections.dgn

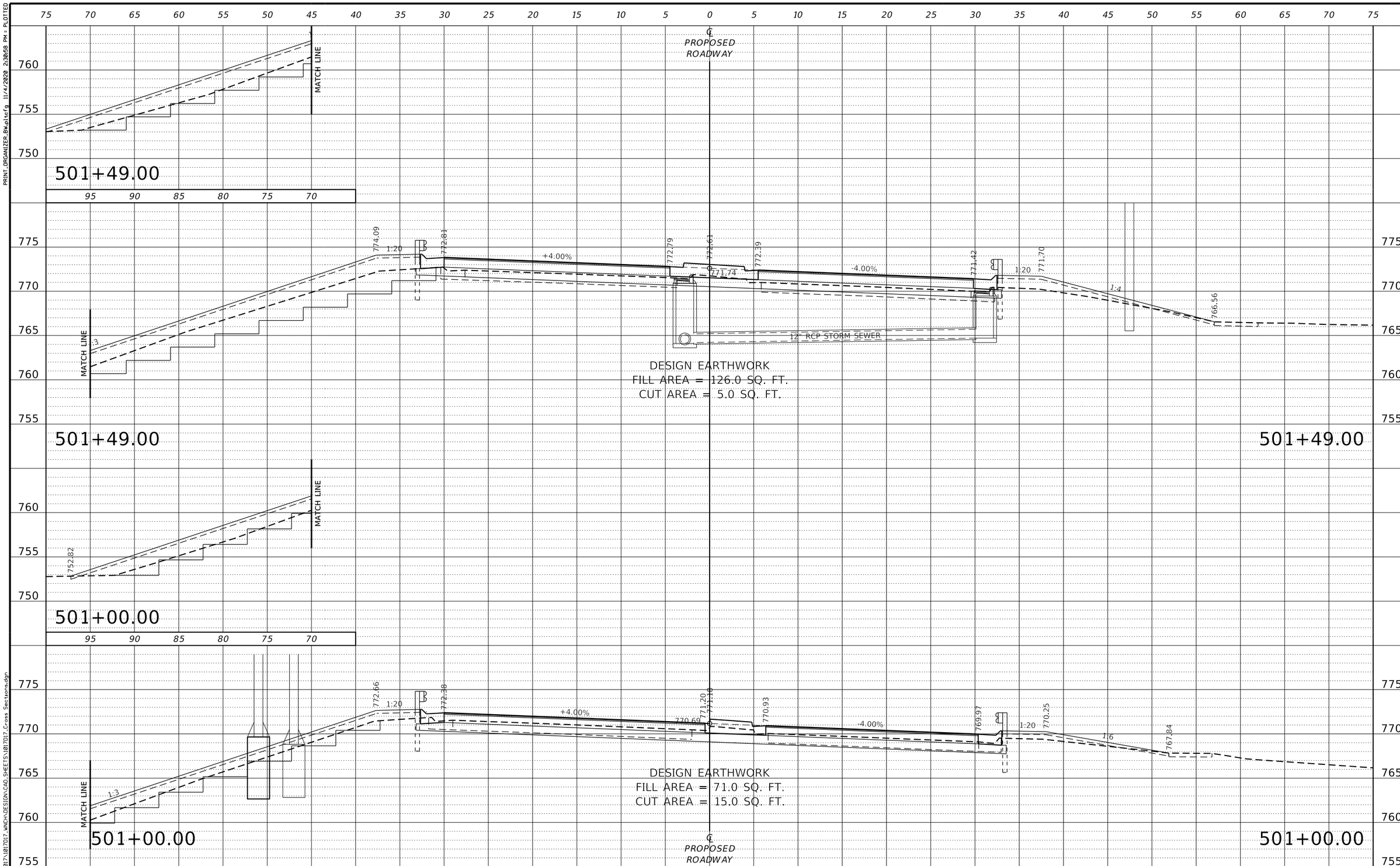

WILLETT HOFMANN & ASSOCIATES INC
ENGINEERING ARCHITECTURE LAND SURVEYING
809 EAST 2ND STREET, DIXON, IL 61021-0367
T: 815-284-3381 DESIGN FIRM: #184-000918

DESIGNED - LGN	REVISED -	
CHECKED - GFS	REVISED -	
DRAWN - TBS	REVISED -	
CHECKED - LGN	REVISED -	

WINNEBAGO COUNTY
F.A.P. 0412 (ALPINE RD) OVER FOREST HILLS RD
STATION 504+16.50

CROSS SECTIONS
STRUCTURE NO. 101-3068
SHEET NO. 3 OF 12 SHEETS

F.A.P. RTE.	SECTION	COUNTY	TOTAL SHEETS	SHEET NO.
412	16-00620-00-BR	WINNEBAGO	109	100
	WHA# 1017D17	CONTRACT NO. 85704		
	ILLINOIS FED. AID PROJECT 7K29(857)			

PRINT_ORGANIZER_BW.pltcfg 11/4/2020 2:30:58 PM = PLOTTED

FILE = S:\PROJECTS\2017\1017D17_WNCH\DESIGN\CAD_SHEETS\1017D17_Cross Sections.dgn

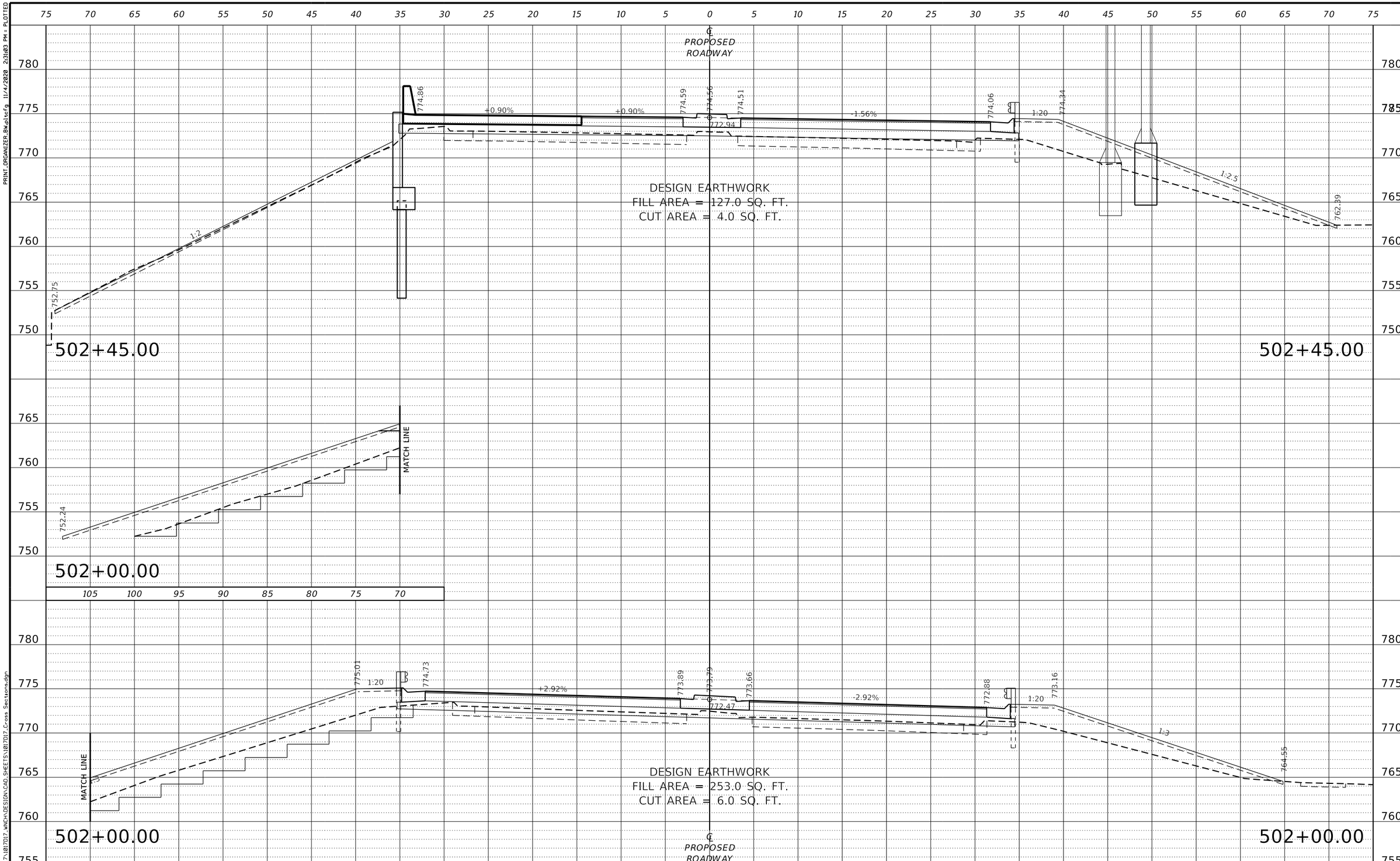

WILLETT HOFMANN & ASSOCIATES INC
ENGINEERING ARCHITECTURE LAND SURVEYING
809 EAST 2ND STREET, DIXON, IL 61021-0367
T: 815-284-3381 DESIGN FIRM: #184-000918

DESIGNED - LGN	REVISED -		
CHECKED - GFS	REVISED -		
DRAWN - TBS	REVISED -		
CHECKED - LGN	REVISED -		

WINNEBAGO COUNTY
F.A.P. 0412 (ALPINE RD) OVER FOREST HILLS RD
STATION 504+16.50

CROSS SECTIONS
STRUCTURE NO. 101-3068
SHEET NO. 4 OF 12 SHEETS

F.A.P. RTE.	SECTION	COUNTY	TOTAL SHEETS	SHEET NO.
412	16-00620-00-BR	WINNEBAGO	109	101
	WHA# 1017D17	CONTRACT NO. 85704		
		ILLINOIS FED. AID PROJECT 7K29(857)		

FILE = S:\PROJECTS\2017\1017D17_WNCH\DESIGN\CAD_SHEETS\1017D17_Cross Sections.dgn
PRINT_ORGANIZER_BW.pltcfg 11/4/2020 2:31:03 PM = PLOTTED

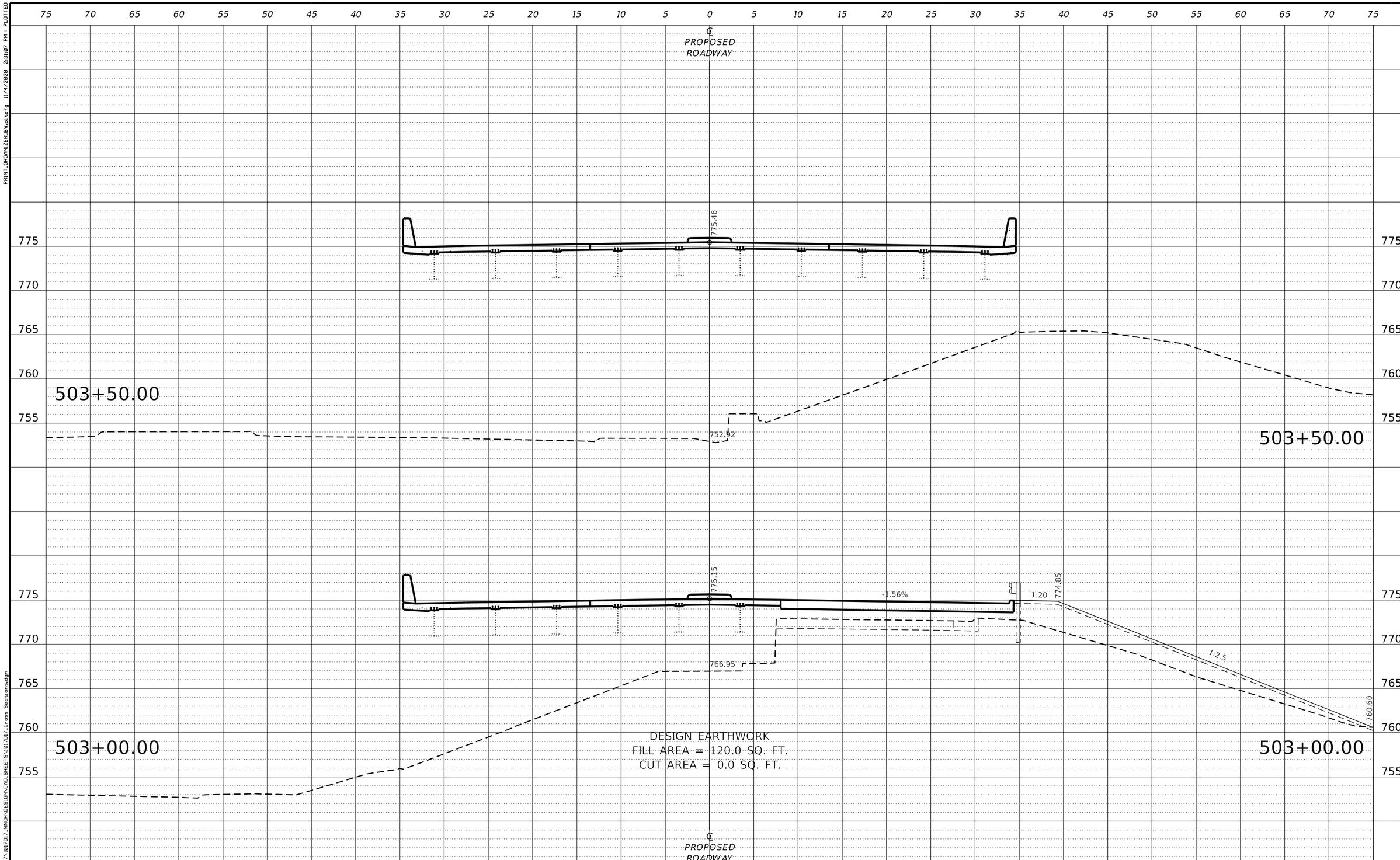

WILLETT HOFMANN & ASSOCIATES INC
ENGINEERING ARCHITECTURE LAND SURVEYING
809 EAST 2ND STREET, DIXON, IL 61021-0367
T: 815-284-3381 DESIGN FIRM: #184-000918

DESIGNED - LGN	REVISED -	
CHECKED - GFS	REVISED -	
DRAWN - TBS	REVISED -	
CHECKED - LGN	REVISED -	

WINNEBAGO COUNTY
F.A.P. 0412 (ALPINE RD) OVER FOREST HILLS RD
STATION 504+16.50

CROSS SECTIONS
STRUCTURE NO. 101-3068

SHEET NO. 5 OF 12 SHEETS

F.A.P. RTE.	SECTION	COUNTY	TOTAL SHEETS	SHEET NO.
412	16-00620-00-BR	WINNEBAGO	109	102
	WHA# 1017D17	CONTRACT NO. 85704		
		ILLINOIS FED. AID PROJECT 7K29(857)		

PRINT_ORGANIZER_BW.pltcfg 11/4/2020 2:31:07 PM = PLOTTED

FILE = S:\PROJECTS\2017\1017D17_WNCH\DESIGN\CAD_SHEETS\1017D17_Cross Sections.dgn

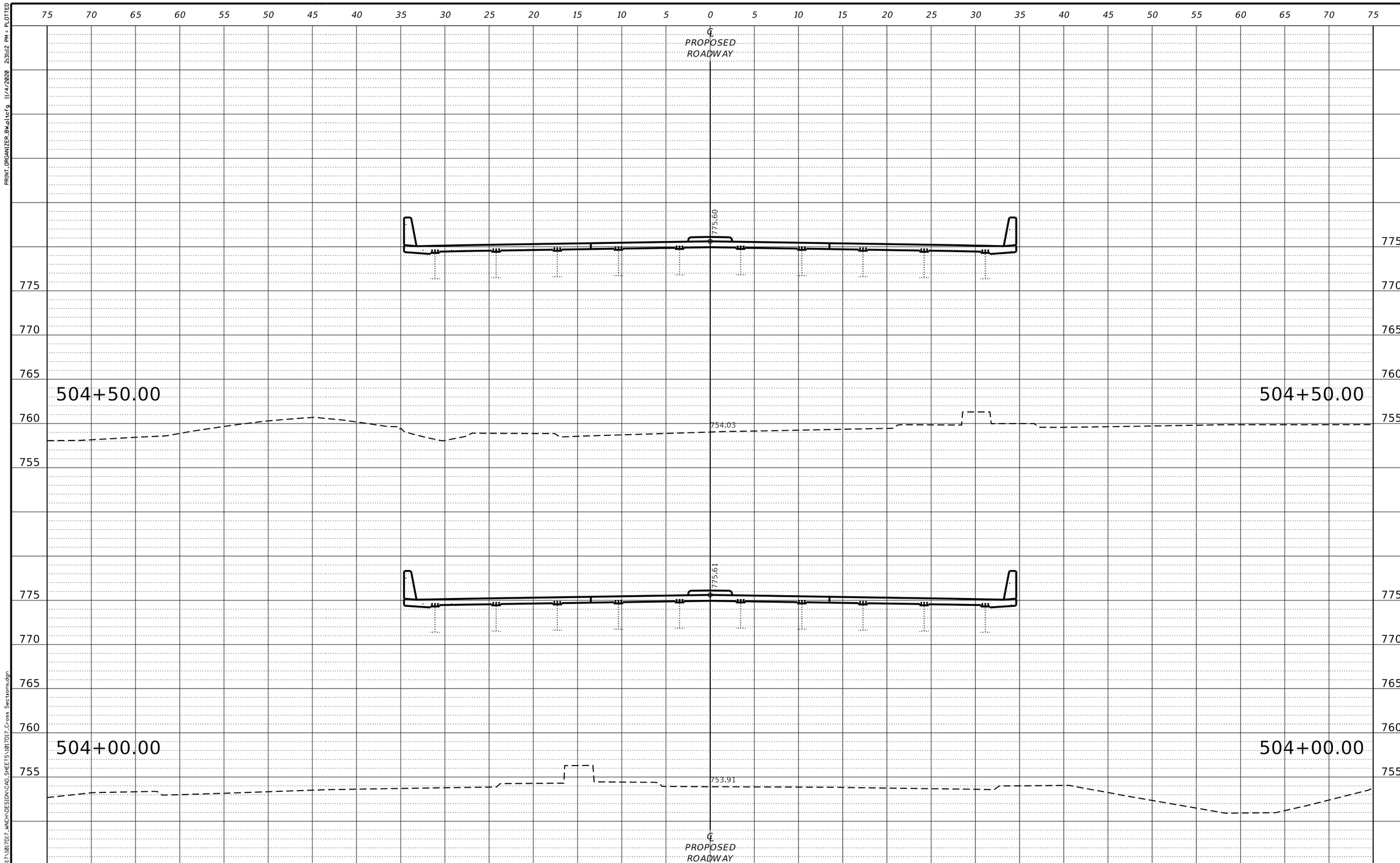

WILLETT HOFMANN & ASSOCIATES INC
ENGINEERING ARCHITECTURE LAND SURVEYING
809 EAST 2ND STREET, DIXON, IL 61021-0367
T: 815-284-3381 DESIGN FIRM#: #184-000918

DESIGNED - LGN	REVISED -		
CHECKED - GFS	REVISED -		
DRAWN - TBS	REVISED -		
CHECKED - LGN	REVISED -		

WINNEBAGO COUNTY
F.A.P. 0412 (ALPINE RD) OVER FOREST HILLS RD
STATION 504+16.50

CROSS SECTIONS
STRUCTURE NO. 101-3068

SHEET NO. 6 OF 12 SHEETS

F.A.P. RTE.	SECTION	COUNTY	TOTAL SHEETS	SHEET NO.
412	16-00620-00-BR	WINNEBAGO	109	103
WHA# 1017D17		CONTRACT NO. 85704		
ILLINOIS	FED. AID PROJECT 7K29(857)			

PRINT_ORGANIZER_BW.pltcfg 11/4/2020 2:31:12 PM = PLOTTED

FILE = S:\PROJECTS\2017\1017D17_WNCH\DESIGN\CAD_SHEETS\1017D17_Cross Sections.dgn

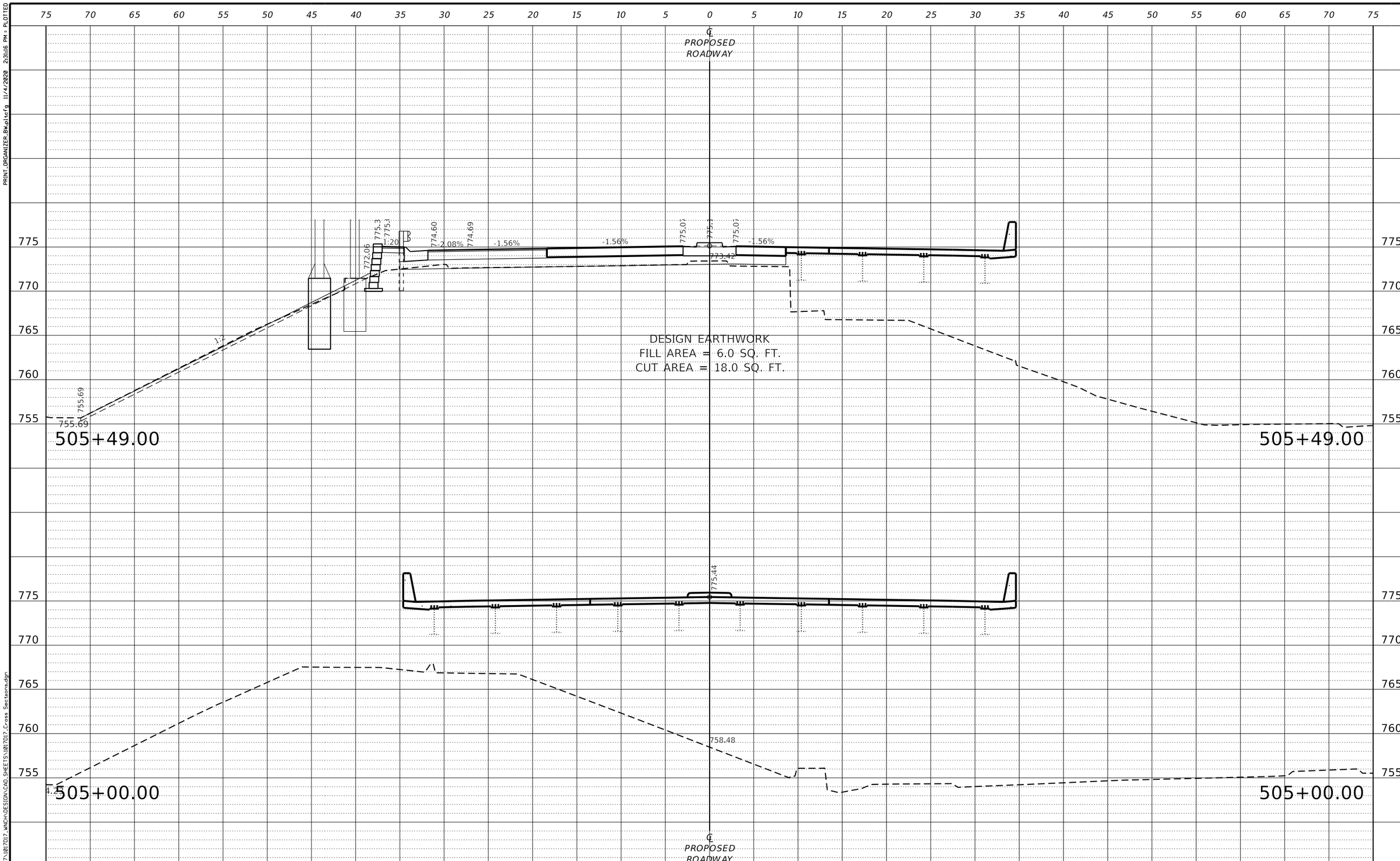

WILLETT HOFMANN & ASSOCIATES INC
ENGINEERING ARCHITECTURE LAND SURVEYING
809 EAST 2ND STREET, DIXON, IL 61021-0367
T: 815-284-3381 DESIGN FIRM: #184-000918

DESIGNED - LGN	REVISED -		
CHECKED - GFS	REVISED -		
DRAWN - TBS	REVISED -		
CHECKED - LGN	REVISED -		

WINNEBAGO COUNTY
F.A.P. 0412 (ALPINE RD) OVER FOREST HILLS RD
STATION 504+16.50

CROSS SECTIONS
STRUCTURE NO. 101-3068

SHEET NO. 7 OF 12 SHEETS

F.A.P. RTE.	SECTION	COUNTY	TOTAL SHEETS	SHEET NO.
412	16-00620-00-BR	WINNEBAGO	109	104
	WHA# 1017D17	CONTRACT NO. 85704		
		ILLINOIS FED. AID PROJECT 7K29(857)		

PRINT_ORGANIZER_BW.pltcfg 11/4/2020 2:31:16 PM = PLOTTED

FILE = S:\PROJECTS\2017\1017D17_WNCH\DESIGN\CAD_SHEETS\1017D17_Cross Sections.dgn

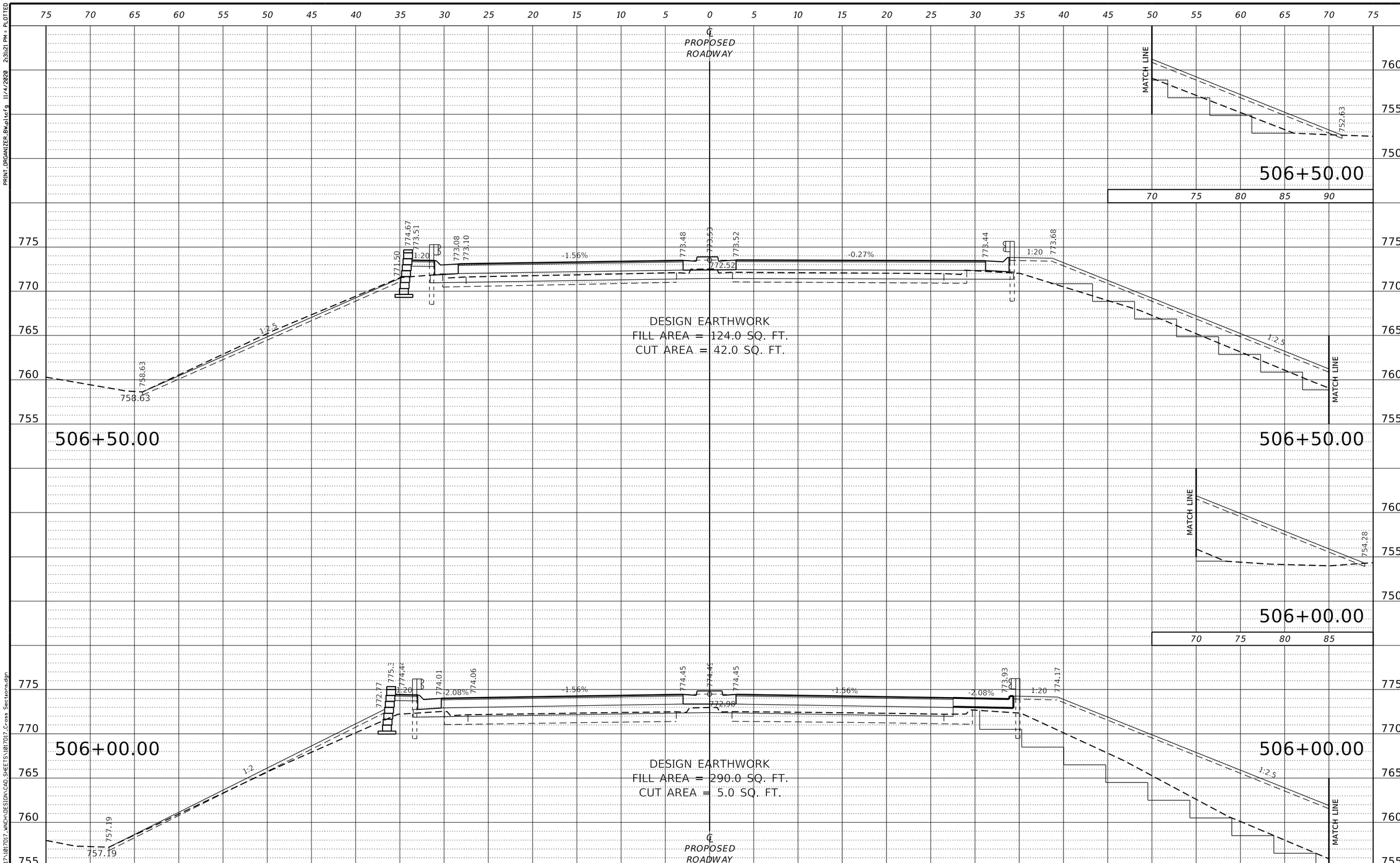

WILLETT HOFMANN & ASSOCIATES INC
ENGINEERING ARCHITECTURE LAND SURVEYING
809 EAST 2ND STREET, DIXON, IL 61021-0367
T: 815-284-3381 DESIGN FIRM#: #184-000918

DESIGNED -	LGN	REVISED -	
CHECKED -	GFS	REVISED -	
DRAWN -	TBS	REVISED -	
CHECKED -	LGN	REVISED -	

WINNEBAGO COUNTY
F.A.P. 0412 (ALPINE RD) OVER FOREST HILLS RD
STATION 504+16.50

CROSS SECTIONS
STRUCTURE NO. 101-3068

SHEET NO. 8 OF 12 SHEETS

F.A.P. RTE.	SECTION	COUNTY	TOTAL SHEETS	SHEET NO.
412	16-00620-00-BR	WINNEBAGO	109	105
	WHA# 1017D17	CONTRACT NO. 85704		
	ILLINOIS FED. AID PROJECT 7K29(857)			

PRINT_ORGANIZER_BW.pltcfg 11/4/2020 2:31:21 PM = PLOTTED

FILE = S:\PROJECTS\2017\1017D17_WNCH\DESIGN\CAD_SHEETS\1017D17_Cross Sections.dgn

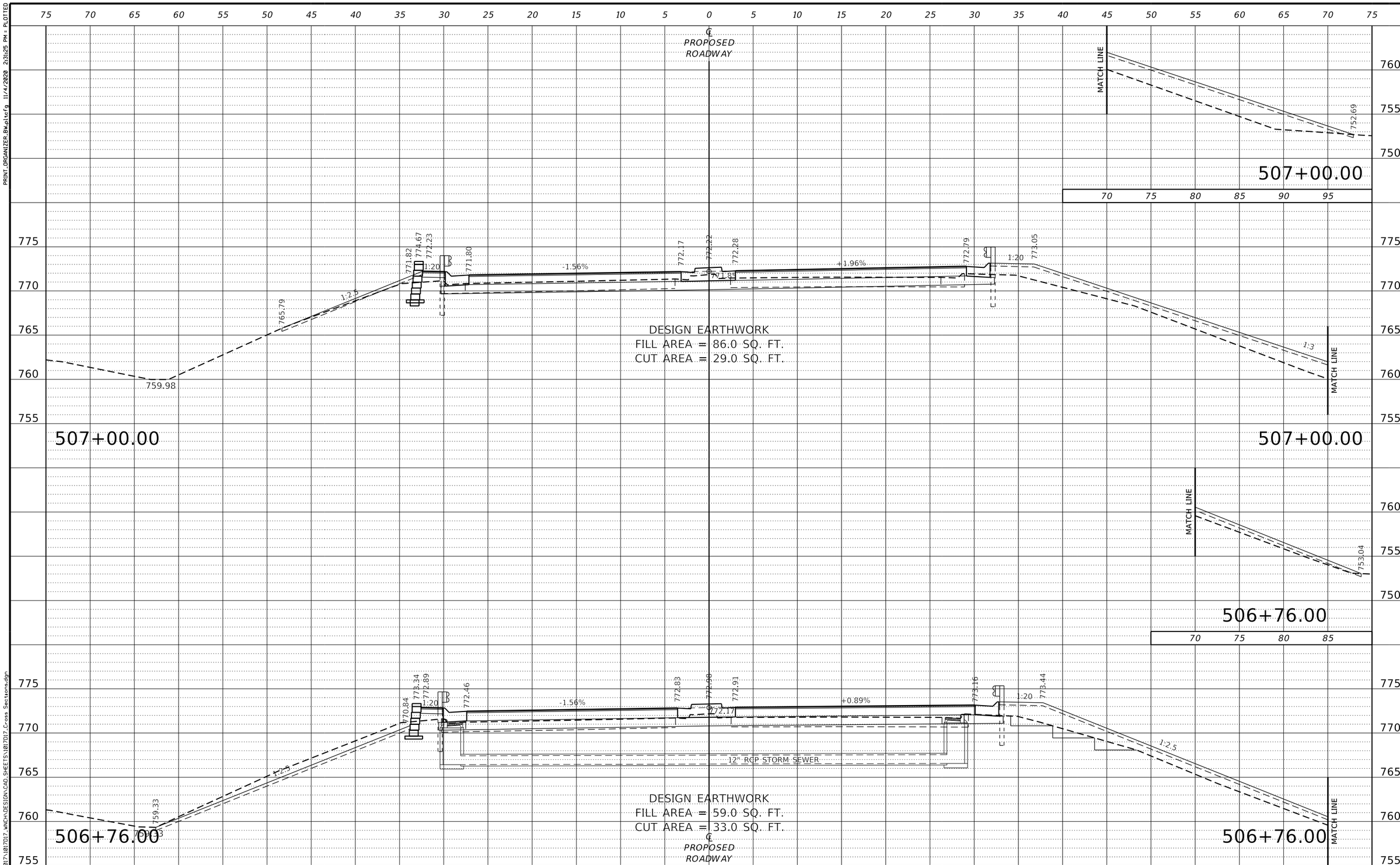

WILLETT HOFMANN & ASSOCIATES INC
ENGINEERING ARCHITECTURE LAND SURVEYING
809 EAST 2ND STREET, DIXON, IL 61021-0367
T: 815-284-3381 DESIGN FIRM: #184-000918

DESIGNED -	LGN	REVISED -	
CHECKED -	GFS	REVISED -	
DRAWN -	TBS	REVISED -	
CHECKED -	LGN	REVISED -	

WINNEBAGO COUNTY
F.A.P. 0412 (ALPINE RD) OVER FOREST HILLS RD
STATION 504+16.50

CROSS SECTIONS
STRUCTURE NO. 101-3068

SHEET NO. 9 OF 12 SHEETS

F.A.P. RTE.	SECTION	COUNTY	TOTAL SHEETS	SHEET NO.
412	16-00620-00-BR	WINNEBAGO	109	106
	WHA# 1017D17	CONTRACT NO. 85704		
	ILLINOIS FED. AID PROJECT 7K29(857)			

PRINT_ORGANIZER_BW.pltcfg 11/4/2020 2:31:25 PM = PLOTTED

FILE = S:\PROJECTS\2017\1017D17_WNCH\DESIGN\CAD_SHEETS\1017D17_Cross Sections.dgn

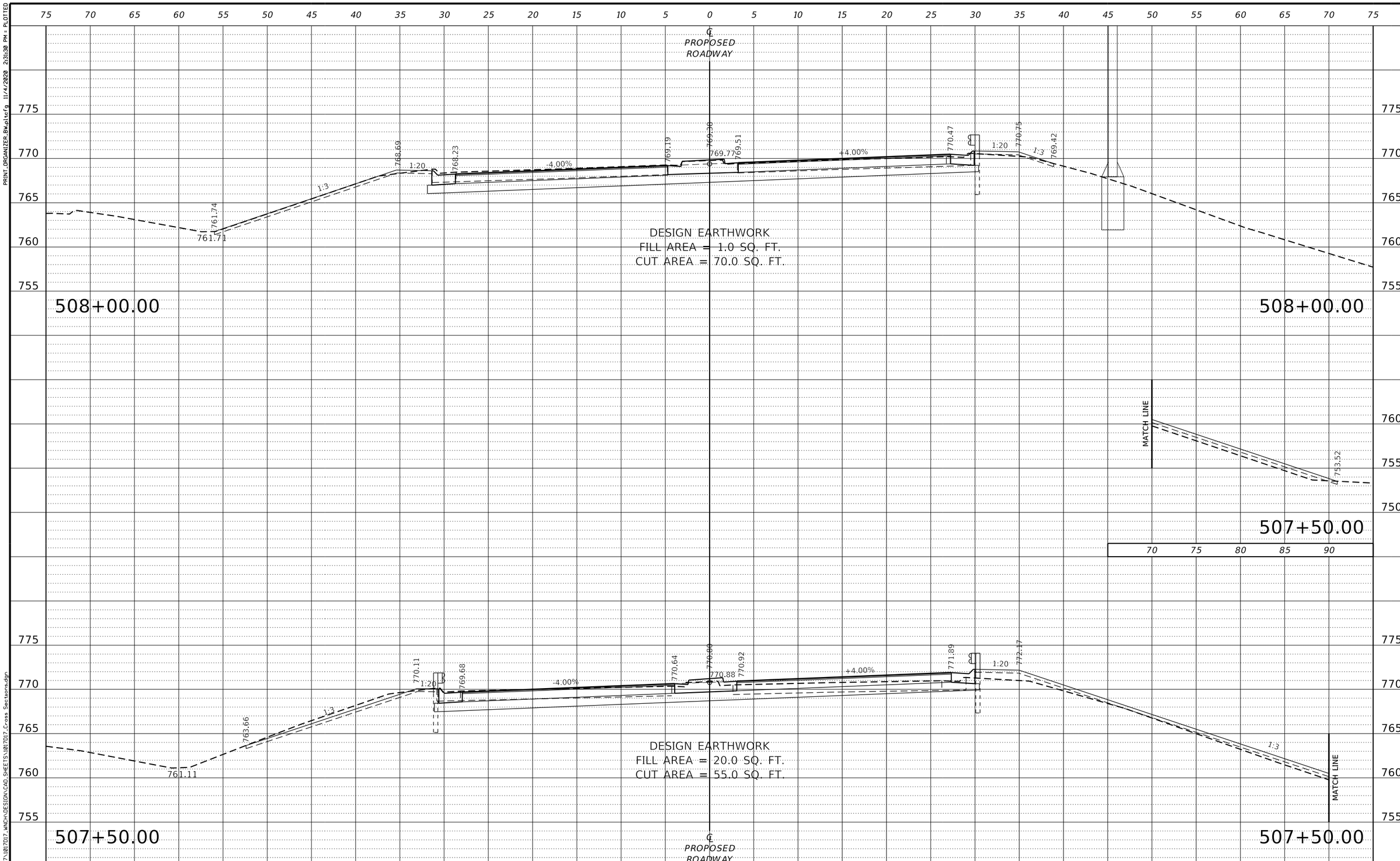

WILLETT HOFMANN & ASSOCIATES INC
ENGINEERING ARCHITECTURE LAND SURVEYING
809 EAST 2ND STREET, DIXON, IL 61021-0367
T: 815-284-3381 DESIGN FIRM: #184-000918

DESIGNED -	LGN	REVISED -	
CHECKED -	GFS	REVISED -	
DRAWN -	TBS	REVISED -	
CHECKED -	LGN	REVISED -	

WINNEBAGO COUNTY
F.A.P. 0412 (ALPINE RD) OVER FOREST HILLS RD
STATION 504+16.50

CROSS SECTIONS
STRUCTURE NO. 101-3068

SHEET NO. 10 OF 12 SHEETS

F.A.P. RTE.	SECTION	COUNTY	TOTAL SHEETS	SHEET NO.
412	16-00620-00-BR	WINNEBAGO	109	107
	WHA# 1017D17	CONTRACT NO. 85704		
		ILLINOIS FED. AID PROJECT 7K29(857)		

PRINT_ORGANIZER_BW.pltcfg 11/4/2020 2:31:30 PM = PLOTTED

FILE = S:\PROJECTS\2017\1017D17_WNCH\DESIGN\CAD_SHEETS\1017D17_Cross Sections.dgn

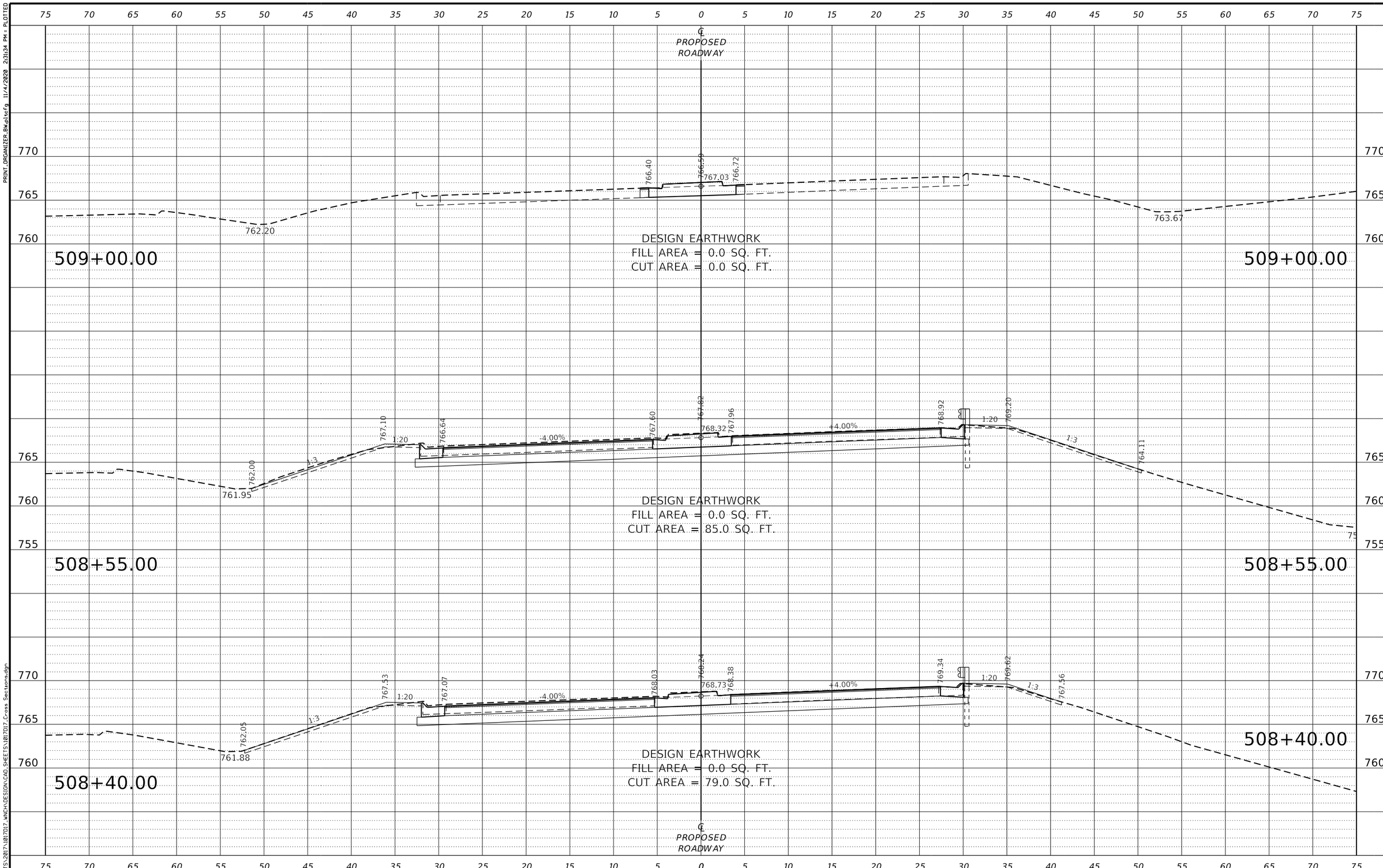

WILLETT HOFMANN & ASSOCIATES INC
ENGINEERING ARCHITECTURE LAND SURVEYING
809 EAST 2ND STREET, DIXON, IL 61021-0367
T: 815-284-3381 DESIGN FIRM: #184-000918

DESIGNED - LGN	REVISED -		
CHECKED - GFS	REVISED -		
DRAWN - TBS	REVISED -		
CHECKED - LGN	REVISED -		

WINNEBAGO COUNTY
F.A.P. 0412 (ALPINE RD) OVER FOREST HILLS RD
STATION 504+16.50

CROSS SECTIONS
STRUCTURE NO. 101-3068

SHEET NO. 11 OF 12 SHEETS

F.A.P. RTE.	SECTION	COUNTY	TOTAL SHEETS	SHEET NO.
412	16-00620-00-BR	WINNEBAGO	109	108
	WHA* 1017D17	CONTRACT NO. 85704		
	ILLINOIS FED. AID PROJECT 7K29(857)			

PRINT_ORGANIZER_BW.pltcfg 11/4/2020 2:31:34 PM = PLOTTED

FILE = S:\PROJECTS\2017\1017D17_WNCH\DESIGN\CAD_SHEETS\1017D17_Cross Sections.dgn

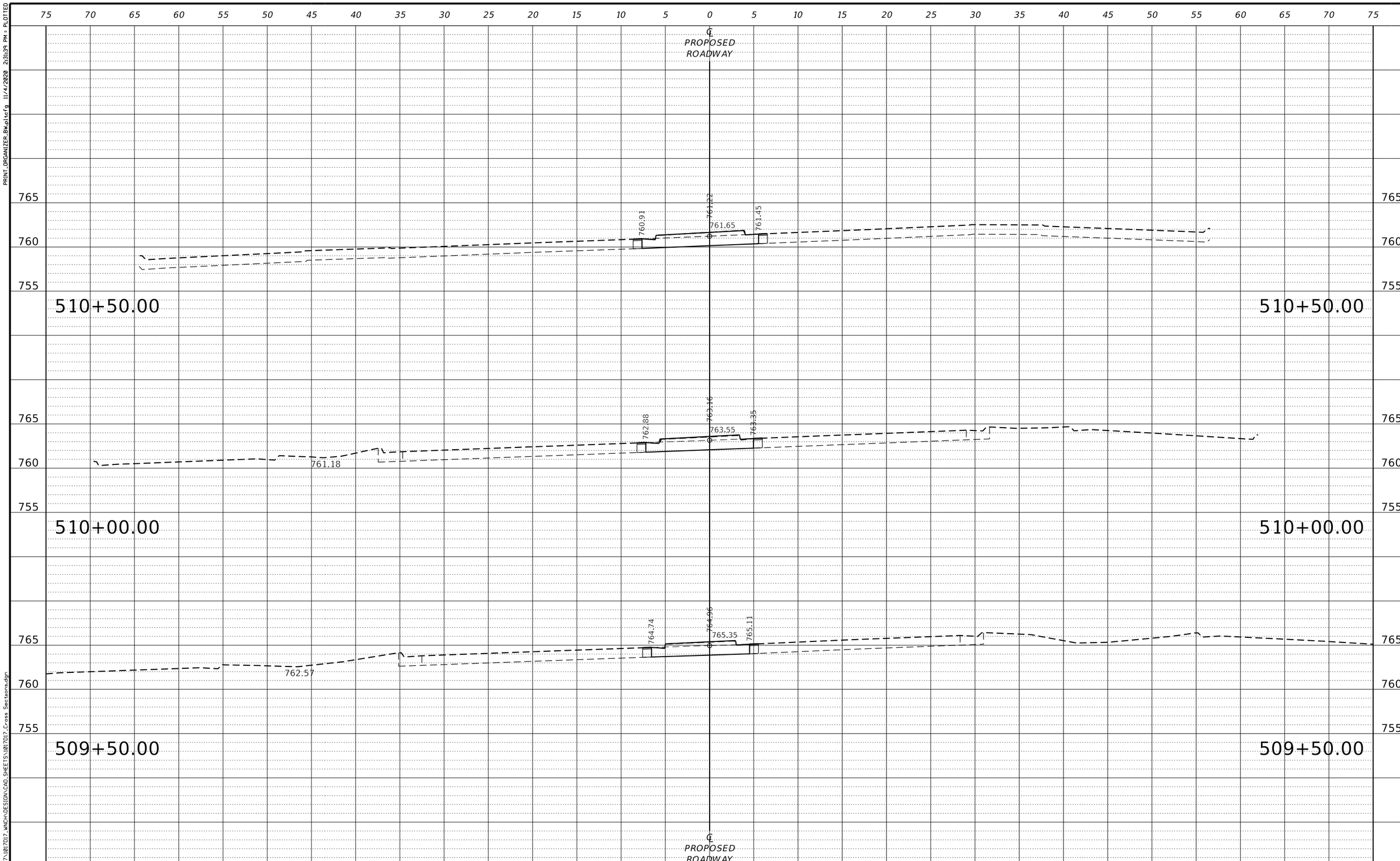

WILLETT HOFMANN & ASSOCIATES INC ENGINEERING ARCHITECTURE LAND SURVEYING 809 EAST 2ND STREET, DIXON, IL 61021-0367 T: 815-284-3381 DESIGN FIRM: #184-000918	DESIGNED - LGN CHECKED - GFS DRAWN - TBS CHECKED - LGN	REVISED - REVISED - REVISED - REVISED -	**WINNEBAGO COUNTY** **F.A.P. 0412 (ALPINE RD) OVER FOREST HILLS RD** **STATION 504+16.50**

CROSS SECTIONS
STRUCTURE NO. 101-3068
SHEET NO. 12 OF 12 SHEETS

F.A.P. RTE.	SECTION	COUNTY	TOTAL SHEETS	SHEET NO.
412	16-00620-00-BR	WINNEBAGO	109	109
	WHA# 1017D17	CONTRACT NO. 85704		
		ILLINOIS FED. AID PROJECT 7K29(857)		

PRINT_ORGANIZER_BW.pltcfg 11/4/2020 2:31:39 PM = PLOTTED

FILE = S:\PROJECTS\2017\1017D17_WNCH\DESIGN\CAD_SHEETS\1017D17_Cross Sections.dgn