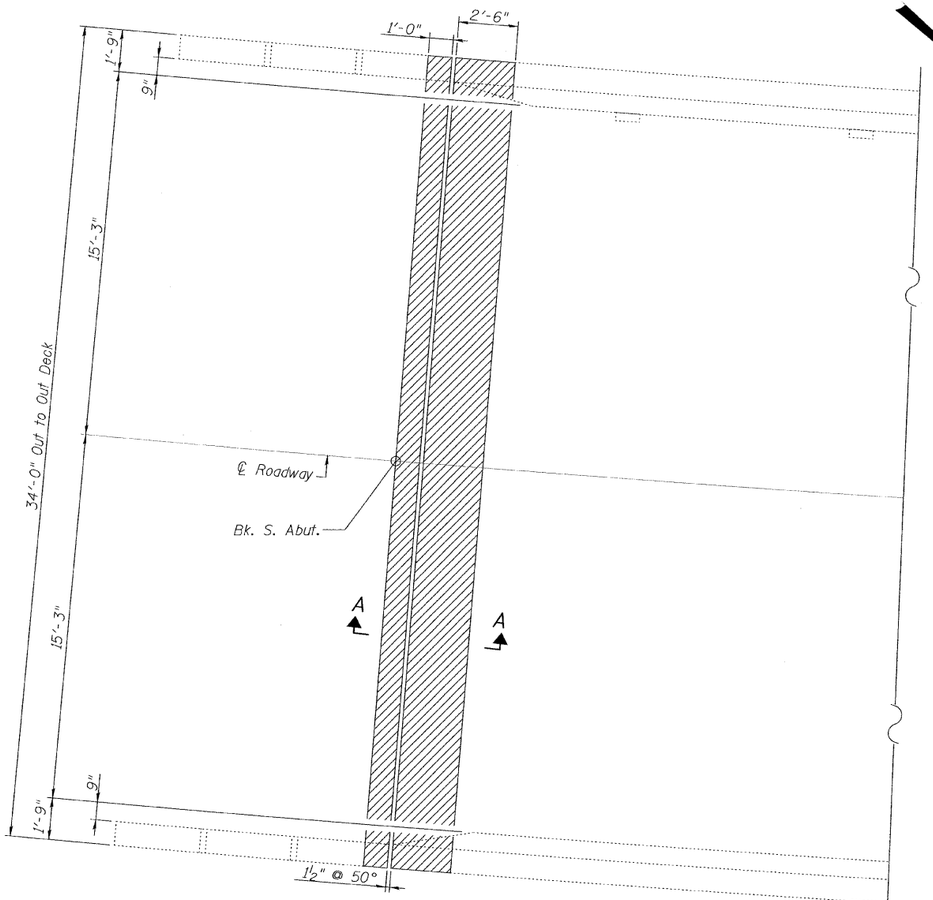

EXISTING PARTIAL PLAN
(South Abutment)

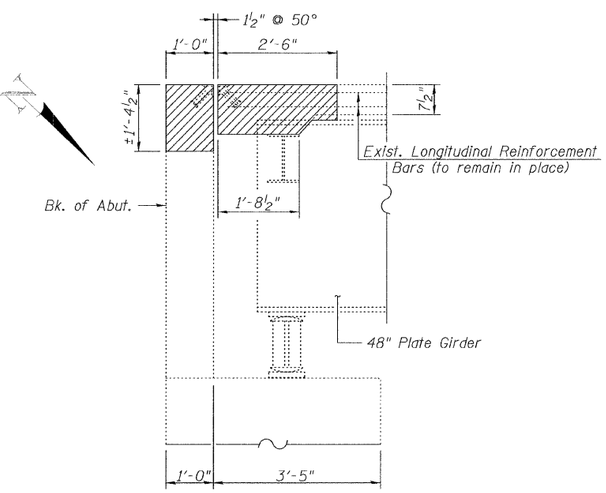

SECTION A-A
(At South Abutment)

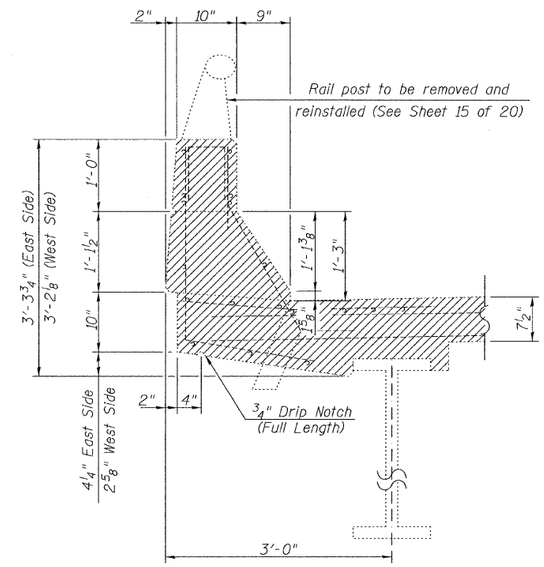

SECTION B-B

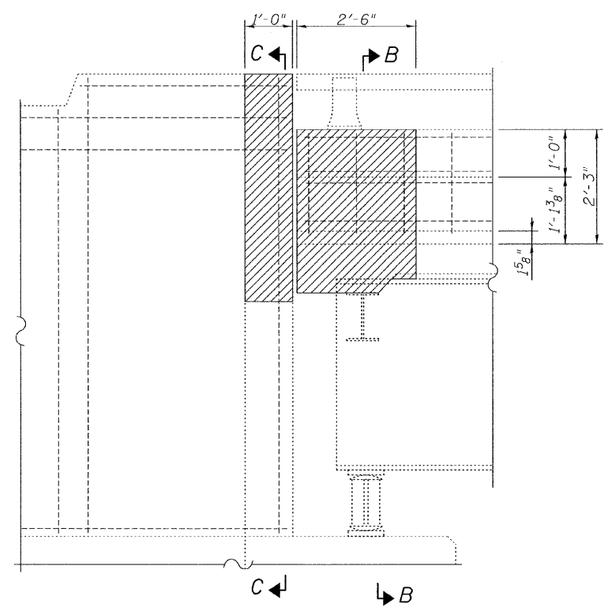

ELEVATION AT PARAPET & WINGWALL

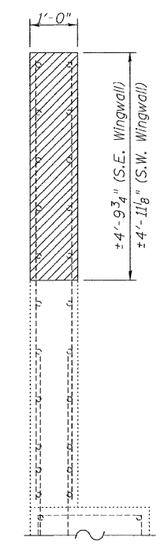

SECTION C-C

NOTES

Removal and disposal of the existing steel angle in the backwall and end of deck shall not be paid for separatly, but shall be included in the cost of "Concrete Removal".

Exisiting reinforcement bars extending into the removal area shall be cleaned, straightened and incorporated into the new construction. Any reinforcement bars that are damaged during concrete removal operations shall be repaired or replaced using an approved bar splicer or anchorage system. Cost included in the the cost of "Concrete Removal".

- Concrete Removal

BILL OF MATERIAL

Item	Unit	Quantity
Concrete Removal	Cu. Yd.	6.1

CONCRETE REMOVAL AT SOUTH ABUTMENT
F.A.S. ROUTE 559 OVER KICKAPOO CREEK
S.N. 054-3003

Allen Henderson & Associates, Inc.
Civil and Structural Engineers Springfield, IL.
62703 Phone: (217)544-8033 IL. Design Firm No. 184-001907

SHEET NO. 6
20 SHEETS

F.A.S. RTE.	SECTION	COUNTY	TOTAL SHEETS	SHEET NO.
559	09-00074-01-BR	LOGAN	22	8
		CONTRACT NO. 93511		
FED. ROAD DIST. NO. _	ILLINOIS FED. AID PROJECT			