F.A.S. RTE.	SECTION	COUNTY	TOTAL SHEETS	SHEET NO.
2320	09-00012-00-LT	WILL	12	10

CONTRACT NO. 63433

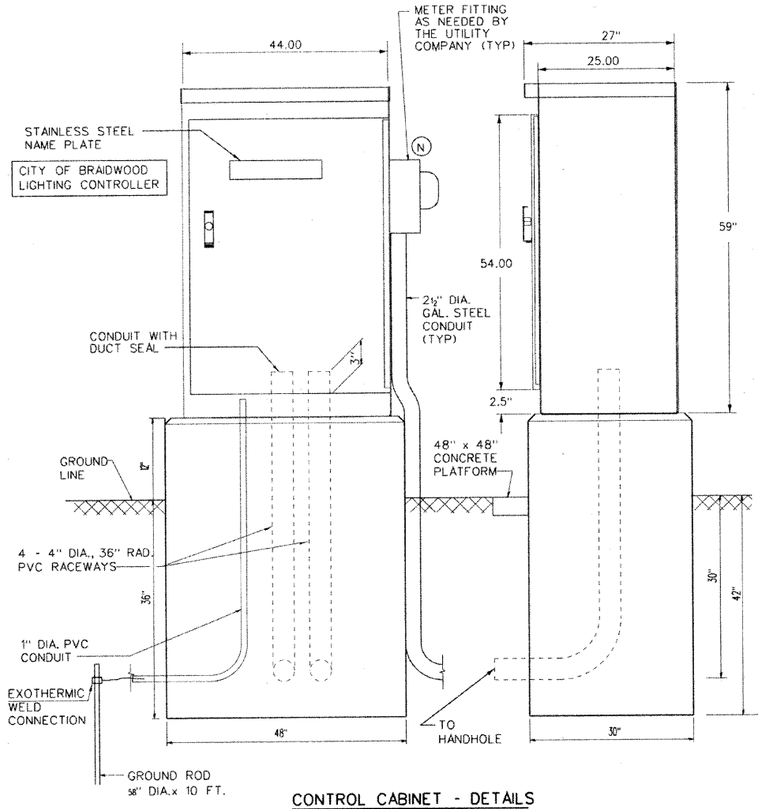

CONTROL CABINET - DETAILS

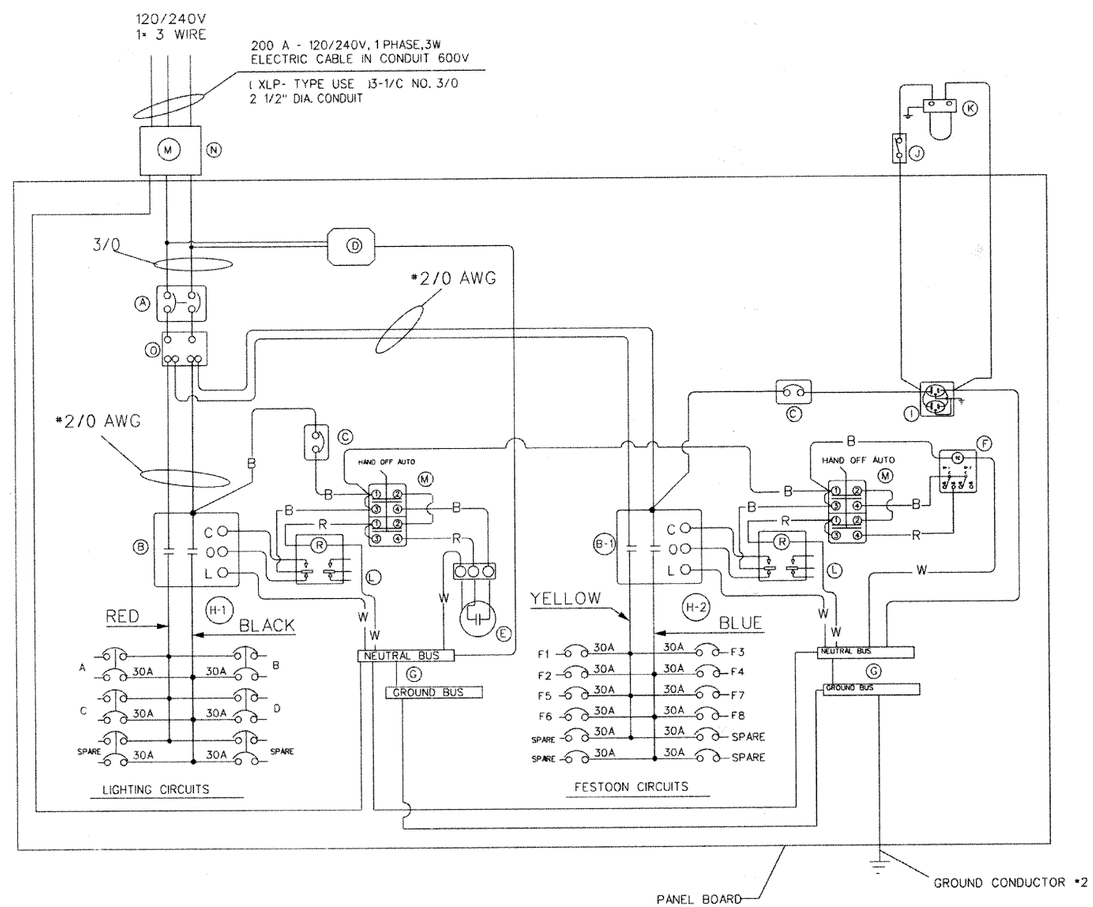

ONE LINE CIRCUIT DIAGRAM

200 AMPERE- 120/240 VOLT, SINGLE PHASE, 3 WIRE

DEVICE SCHEDULE		
ITEM	QTY	DESCRIPTION
A	1	CIRCUIT BREAKER, MOLDED CASE, THERMAL MAGNETIC, 2-POLE, 600V. A.C. 225A FRAME, 200A. NON-INTERCHANGABLE TRIP. BOLT-ON TYPE; INTERUPTING CAPACITY OF NOT LESS THEN 65,000 RMS SYMMETRICAL AMPERES AT 240V.
B	2	LIGHTING CONTACTOR (REMOTE CONTROL SWITCH) MECHANICALLY HELD. SQ.D PB MOUNTED ON SUB PANEL 100A, 2P, 600V. WITH 120V. COIL.
C	2	CIRCUIT BREAKER, MOLDED CASE, THERMAL MAGNETIC, 1-POLE, 15A, 277V. BOLT-ON TYPE WITH AN INTERUPTING RATING OF NOT LESS THAN 14,000 RMS SYMMETRICAL AMPERES AT 277V
D	1	SURGE ARRESTOR, FOR 240/120V, 3 WIRE SERVICE
E	1	PHOTOCELL, 120 V, 1 PHASE
F	2	TIMECLOCK, 120V, 60 HZ, MICROPROCESSOR BASED 2-CHANNEL CONTROLLER WITH ASTRONOMIC FUNCTIONS. RATED FOR -30 to 54 C.
G	2	GROUND/NEUTRAL BUS, COPPER, 22 CONNECTORS, (MIN.)
H1	6	CIRCUIT BREAKER, MOLDED CASE, THERMAL MAGNETIC, 2-POLE, 30A, 277V. BOLT-ON TYPE WITH AN INTERUPTING RATING OF NOT LESS THAN 14,000 RMS SYMMETRICAL AMPERES AT 277V
H2	12	CIRCUIT BREAKER, MOLDED CASE, THERMAL MAGNETIC, 1-POLE, 30A, 277V. BOLT-ON TYPE WITH AN INTERUPTING RATING OF NOT LESS THAN 14,000 RMS SYMMETRICAL AMPERES AT 277V
I	1	GFI RECEPTACLE, 120V. 20A. PREMIUM SPEC. GRADE. NEMA REFERENCE 5-15R IN WEATHER PROOF BOX WITH FLAP-TYPE COVER. (NEC 406.8B.2.a)
J	1	MICRO SWITCH (MOUNTED WITH ACTUATOR TO SWITCH WHEN DOOR OPENED)
K	1	120 V LIGHT FIXTURE, VAPORTIGHT. WITH GLOBE AND GUARD AND MOUNTING BOX.
L	2	RELAY, 120V - COIL
M	2	MANUAL-OFF-AUTO 3 POSITION SWITCH
N	1	METER FITTING, 200A
O	1	SPLICE BLOCK

PHOTOCELL MOUNTED IN CABINET OVERHANG

NOTES

1. THE CABINET SHALL BE FABRICATED FROM 0.125" THICK ALUMINUM ALLOY SHEET AND SHALL BE REINFORCED WITH ALUMINUM ANGLES. THE CABINET DOOR SHALL BE NEMA TYPE 3R CONSTRUCTION WITH NEOPRENE GASKET. THE DOOR SHALL HAVE STAINLESS STEEL HINGES AND THREE POINT LOCKING SYSTEM.
2. THE CONTRACTOR SHALL REMOVE VEGITATION AND TOPSOIL. LEVEL THE AREA IN FRONT OF THE CONTROL CABINET DOOR AND PLACE LENGTH WISE, PARALLEL TO CONTROL CABINET. A PRECAST PAD, 48"x48"x4" MINIMUM SIZE. THE COST OF LABOR AND MATERIALS SHALL BE INCIDENTAL TO THE CONTROL CABINET.
3. CONTROL WIRE SHALL BE #12 AWG, 600V, TYPE "MTW" STRANDED COPPER GRAY SWITCH BOARD WIRE. THE ENDS OF ALL CONTROL WIRES SHALL BE IDENTIFIED.
4. THE ELECTRIC METER BOX SHALL BE MOUNTED ON THE SIDE OF THE CONTROL CABINET, NEAR TO THE SERVICE POLE AND/OR AS DIRECTED BY THE ENGINEER.
5. ALL CONTROL CABINET ITEMS SHALL HAVE SUITABLE IDENTIFICATION. OPEN CIRCUIT BREAKERS, CONTACTORS AND OTHER OPEN DEVICES SHALL HAVE PERMANENT SELF STICKING TAGS. DEVICES IN ENCLOSURES SHALL HAVE ENGRAVED 2-COLOR LAMINATED PLASTIC NAMEPLATES ATTACHED TO ENCLOSURES WITH SCREWS. NAMEPLATES SHALL BE ENGRAVED TO CORRESPOND TO DESIGNATIONS ON THE DRAWINGS. INTERNAL CABINET WIRING SHALL BE IDENTIFIED AS INDICATED OR AS DIRECTED BY THE ENGINEER BY MEANS OF SELF-STICKING TAGS APPLIED AT EACH CONNECTED END. IDENTIFICATION SHALL BE MADE BY THE CABINET MANUFACTURER.
6. ALL WIRING WITHIN THE CABINET SHALL BE COLOR CODED AS INDICATED.
   R = RED BL = BLUE W = WHITE
   B = BLACK Y = YELLOW G = GREEN
7. PROVIDE SEALING GROMMETS FOR ALL OPEN WIRING EXTENDED FROM DEVICES IN BOXES OR CABINETS WITHIN THE CONTROL CABINET.
8. THE CABINET SHALL BE PRIMED AND PAINTED AS SPECIFIED. THE OUTSIDE SURFACE OF THE CONTROL CABINET SHALL HAVE A BLACK COLOR FINISH.
9. THE HEADS OF CONNECTOR SCREWS SHALL BE PAINTED WHITE FOR NEUTRAL BUSS CONNECTION AND GREEN FOR GROUND BUSS CONNECTORS.
10. ALL WIRING SHALL BE NEATLY DRESSED AND SUPPORTED.
11. THE CONTROLLER SHALL BE CONSTRUCTED TO U.L. STD. 508 AND BEAR THE U.L. LABEL "ENCLOSED INDUSTRIAL CONTROL PANEL".
12. PROVIDE A HOLDER AND WATERPROOF POUCH ON THE INNER SIDE OF THE CONTROLLER DOOR. THE HOLDER AND POUCH SHALL BE MOUNTED SO THAT RAIN WATER OR CONDENSED WATER CANNOT ENTER THE POUCH WITH THE CABINET DOOR OPEN. FURNISH A LAMINATED THE APPROVED COPY OF THE "CONTROL CABINET WIRING DIAGRAM".
13. THE CONTRACTOR SHALL OBTAIN ANCHOR BOLTS LOCATION TEMPLATE FROM THE FABRICATOR OF LIGHTING CONTROLLER
14. THE CONTROLLER FABRICATION SHALL COMPLY TO ARTICLE 1068.01 OF THE STANDARD SPECIFICATIONS
15. THE CONTROLLER CABINET DOOR SHOULD OPEN AWAY FROM THE STREET
16. THE SERVICE EQUIPMENT SHALL HAVE U.L. LABEL AND SHALL BE MARKED TO IDENTIFY IT AS BEING SUITABLE FOR USE AS SERVICE EQUIPMENT (NEC ARTICLE 230.66)

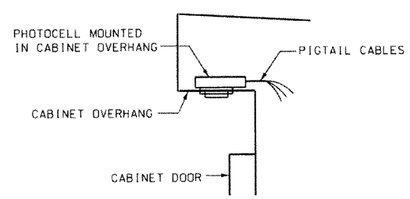

PHOTOCELL IN CABINET OVERHANG DETAIL

NOT TO SCALE

THIS DRAWING IS THE EXCLUSIVE PROPERTY OF SUNJOY INC. AND IS PROVIDED ONLY FOR THE PROJECT LISTED ON THIS DRAWING. THIS DRAWING SHALL NOT BE DUPLICATED, USED OR DISCLOSED, IN WHOLE OR IN PART, FOR ANY PURPOSE WHATSOEVER WITHOUT THE WRITTEN PERMISSION OF SUNJOY INC.

DETAILS FROM EXCEL LTD - (847) 543-9138

REVISED 11-22-09

Sunjoy Inc.
Area Lighting
Consulting Engineers
212 TIMBERCREST DRIVE
SCHAUMBURG, ILLINOIS
60193-1572

REVISIONS

NAME	DATE

ILLINOIS DEPARTMENT OF TRANSPORTATION
CITY OF BRAIDWOOD, WILL COUNTY
ILLINOIS ROUTE 113 (MAIN STREET)
ORNAMENTAL LIGHTING IMPROVEMENT

LIGHTING CONTROLLER, SPECIAL

SCALE: NTS
DATE: 10-15-09
DRAWN BY HKQ
CHECKED BY JS

$FILE$
$DATE$