SECTION 2, TOWNSHIP 37, RANGE 12
SECTION 11, TOWNSHIP 37, RANGE 12

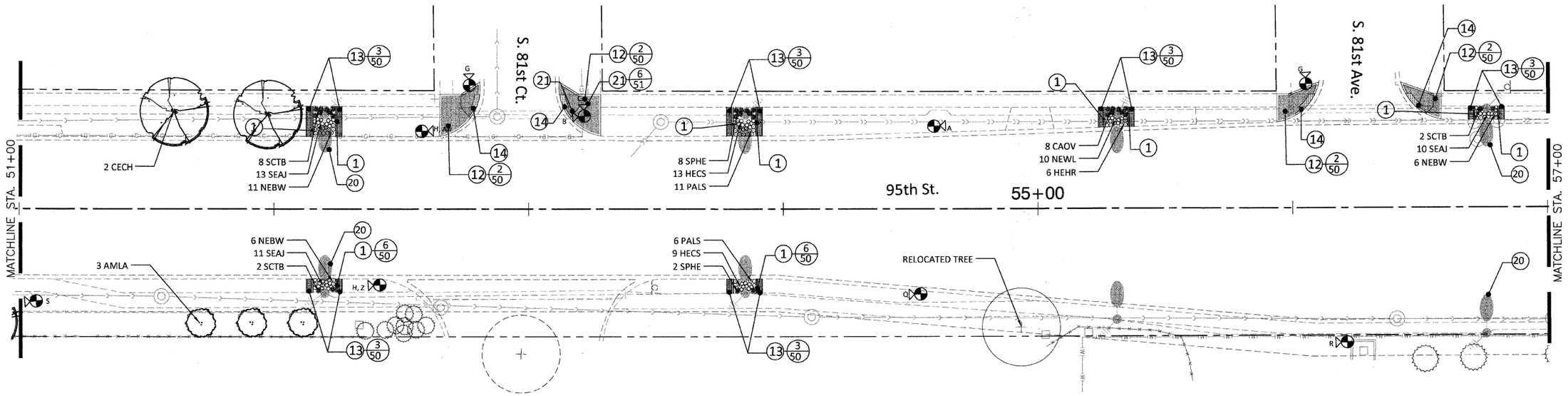

0 10 20 40 60

CONSTRUCTION
PLAN NOTES:

1. FURNISH AND INSTALL CONCRETE CURB, SPECIAL: 6"X 6" CONCRETE BAND, MEDIUM BROOM FINISH, SEE DETAIL.

2. INTENTIONALLY OMITTED

3. FURNISH AND INSTALL INFORMATION KIOSK. SEE DETAIL.

4. INTENTIONALLY OMITTED

5. FURNISH AND INSTALL NEW L.E.D. COUNTDOWN TIMER SIGNAL LIGHT. SEE TRAFFIC SIGNAL PLANS.

6. REINSTALL BUS SHELTERS IN PREVIOUS LOCATIONS, RECONNECTING ALL ELECTRICAL CONNECTIONS PER PREVIOUS CONFIGURATIONS. SHELTERS TO BE MOUNTED TO EXISTING CONCRETE FOOTINGS. CONTRACTOR TO NOTIFY LANDSCAPE ARCHITECT BEFORE REINSTALLATION IF FOOTINGS ARE DAMAGED OR OTHERWISE IN DISREPAIR.

7. COMBINATION CONCRETE CURB AND GUTTER, TYPE B-6.12, SEE DETAIL. MATCH EXISTING DIMENSIONS AND PROFILE.

8. FURNISH AND INSTALL TRASH RECEPTACLES. MODEL:157-32-25BT OR APPROVED EQUAL. COLOR: BLACK, WITH CUSTOM 9" DIA. CITY LOGO PANEL. SEE SITE FURNISHINGS SCHEDULE.

9. EXPANSION JOINT. SEE DETAIL.

10. FURNISH AND INSTALL CURB WALL, SPECIAL: 6"X18" COLORED CONCRETE CURBING., COLOR: TERRA COTTA BY INCRETE OR APPROVED EQUAL. SEE DETAIL.

11. PORTLAND CEMENT CONCRETE SIDEWALK 10 INCH (SPECIAL) INTEGRAL COLOR: TERRA COTTA BY INCRETE SYSTEMS OR APPROVED EQUAL. STAMP PATTERN: KEYSTONE 12" SQUARE BY INCRETE SYSTEMS OR APPROVED EQUAL. USE POWDERED, DARK BROWN COLOR RELEASING AGENT. SEE DETAIL. OUTER 1' EDGES TO BE MEDIUM BROOM FINISH WITH REFLECTIVE WHITE THERMOPLASTIC MARKING, LINE 12", WITHOUT STAMPING, SEE PLANS. THERMOPLASTIC PAVEMENT MARKING -LINE 12". AS SHOWN ON PLANS, 12" X 6', 3' ON CENTER, TYP.

12. MODULAR CONCRETE PAVERS (SPECIAL) - FURNISH AND INSTALL PRECAST CONCRETE PAVERS ON 1" SAND BED OVER 5" CONCRETE BED AND 3" GRAVEL. SEE DETAIL. HOLLAND PREMIER, PATTERN: BASKETWEAVE, COLOR LIMESTONE BY UNILOCK OR APPROVED EQUAL. SOLDIER COURSE SHOWN WITH 8" OFFSET LINE, TYPICAL.

13. CONCRETE PAVERS - FURNISH AND INSTALL CONCRETE PAVERS ON SAND BED. HOLLAND PREMIER, PATTERN: BASKETWEAVE, COLOR HERITAGE BROWN BY UNILOCK OR APPROVED EQUAL. SEE DETAIL.

14. DETECTABLE WARNINGS ON TYPE B SIDEWALK RAMPS IN MODULAR CONCRETE PAVERS (SPECIAL)

15. MEET EXISTING PAVEMENT WITH NEW STAMPED CONCRETE FLUSH. ALL PAVEMENT TRANSITIONS SHALL BE SMOOTH AND SUBTLE. ANY ABRUPT CHANGES IN ELEVATION SHALL BE REPAIRED OR REPLACED BY THE CONTRACTOR AT HIS EXPENSE.

16. MEET EXISTING CONCRETE WALK WITH NEW CONC. PAVER PVMT. ALL PAVEMENT TRANSITIONS SHALL BE SMOOTH AND SUBTLE, TYPICAL. ANY ABRUPT CHANGES SHALL BE REPAIRED OR REPLACED BY THE CONTRACTOR AT HIS EXPENSE.

17. MEET EXISTING CONCRETE CURB FLUSH WITH NEW PAVERS. MINIMUM CROSS SLOPE SHALL BE 1%.

18. PAINT EXISTING TRAFFIC SIGNAL EQUIPMENT, INCLUDES POLES. COLOR: GLOSS BLACK. SEE SPECIAL PROVISIONS.

19. MODULAR CONCRETE PAVERS (SPECIAL) - FURNISH AND INSTALL PRECAST CONCRETE PAVERS ON 1" SAND BED OVER 5" CONCRETE BED AND 3" GRAVEL. SEE DETAIL. HOLLAND PREMIER, PATTERN: BASKETWEAVE, COLOR HERITAGE BROWN BY UNILOCK OR APPROVED EQUAL. SOLDIER COURSES SHOWN WITH 8" OR 12" OFFSET LINES, TYPICAL, SEE PLANS.

20. FURNISH AND INSTALL FLAGPOLE INSERT ON EXISTING LIGHT POLE MOUNTS

21. REMOVE SIGN PANEL ASSEMBLY - TYPE A, REMOVE SIGN PANEL - TYPE 1, ORNAMENTAL STREET SIGN POST, COMPLETE, RETURN SIGN BLADES TO CITY PUBLIC WORKS. SEE DETAIL, SPECIAL PROVISIONS AND SIGN SCHEDULE

22. REMOVE SIGN PANEL ASSEMBLY - TYPE A OR TYPE B, REMOVE SIGN PANEL- TYPE 1 OR TYPE 2, RELOCATE SIGN PANEL ASSEMBLY- TYPE A OR TYPE B, RELOCATE SIGN PANEL- TYPE 1 OR TYPE 2, ORNAMENTAL SIGN POST - FURNISH AND INSTALL DECORATIVE POSTS FOR REGULATORY SIGNS. REPLACE ALL POSTS WITH DECORATIVE ROUND BLACK POZ-LOC POLES. ALL EXISTING SIGN PANELS TO BE REMOVED AND CLEANED, THEN TO HAVE BLACK 3M VINYL APPLIED TO THE BACK AND INSTALLED ON NEW POLES. SEE DETAIL 5, SHEET 51, THE SIGN SCHEDULE AND PLANS.

23. REMOVE SIGN PANEL - TYPE 1 OR TYPE 2, RELOCATE SIGN PANEL - TYPE 1 OR TYPE 2 SIGNS ATTACHED TO LIGHTPOLES AND TRAFFIC POSTS TO BE REMOVED, CLEANED AND THEN TO HAVE BLACK 3M VINYL APPLIED TO BACK, AND BE RE-ATTACHED USING NEW BLACK STAINLESS STEEL BANDING STRAPS AND HARDWARE. SEE DETAIL 5, SHEET 51, THE SIGN SCHEDULE AND PLANS.

24. HISTORICAL MARKER SIGN POST, COMPLETE, FURNISH AND INSTALL A 3' X 3' BRONZE PANEL, TO BE SET FLUSH WITH SURROUNDING PAVERS ON A CONCRETE UNDERLAYMENT BED, ART TO BE PROVIDED BY CITY. SEE DETAIL.

CONSTRUCTION
GENERAL NOTES:

1. CONTRACTOR SHALL TAKE ALL PRECAUTIONS NOT TO DAMAGE UTILITIES. ANY AND ALL DAMAGE WILL BE REPAIRED OR REPLACED BY THE CONTRACTOR AT NO ADDITIONAL EXPENSE TO THE OWNER. EXISTING UTILITIES SHOWN ON THE PLAN ARE FOR REFERENCE ONLY AND ARE NOT GUARANTEED TO BE ACCURATE OR COMPLETE. IT IS THE RESPONSIBILITY OF THE CONTRACTOR TO LOCATE AND VERIFY ALL UTILITIES WITHIN THE PROJECT LIMITS AND TO ADJUST ACCORDINGLY.

LANDSCAPE PLAN
GENERAL NOTES:

A. FINE GRADE AND SOD DISTURBED AREA.

B. PLANTING BEDS SHALL HAVE A 3" CULTIVATED EDGE WHEN NOT BORDERED BY CONCRETE EDGE.

C. FINE GRADE AND SEED ALL AREAS DISTURBED DURING CONSTRUCTION UNLESS OTHERWISE INDICATED ON PLAN.

* SITE SURVEY PROVIDED BY:
ROBINSON ENGINEERING, INC.
17000 South Park Avenue
South Holland, Illinois 60473
(708) 331-6700

* SEE ALSO CONSTRUCTION PLAN GENERAL NOTES SHEET 3

STREET SIGN LEGEND

*SEE SHEET 5 FOR SIGN SCHEDULE

J, EE — SIGN ON BLACK DECORATIVE POST, SEE NOTE 22 THIS SHEET, DETAIL 5, SHEET 51, SIGNING PLANS SHEETS 33A-33N, AND THE SPECIAL PROVISIONS FOR ADDITIONAL INFORMATION

R, JJ — SIGN MOUNTED ON WOOD POLE, TRAFFIC LIGHT POLE OR STREET LIGHT POLE, SEE NOTE 23 THIS SHEET, DETAIL 5, SHEET 51, SIGNING PLANS SHEETS 33A-33N, AND THE SPECIAL PROVISIONS FOR ADDITIONAL INFORMATION

LANDSCAPE LEGEND

EXISTING SHADE TREE
EXISTING EVERGREEN TREE
PROPOSED SHADE TREE
PROPOSED ORNAMENTAL TREE
PROPOSED DECIDUOUS SHRUB
PROPOSED ORNAMENTAL GRASS
PROPOSED PERENNIAL

FILE NAME = pri_construction plan - IDOT P27	USER NAME =	DESIGNED — BCL	REVISED — 10/30/2009	STATE OF ILLINOIS DEPARTMENT OF TRANSPORTATION	CONSTRUCTION/ LANDSCAPE PLAN	F.A.P. RTE.	SECTION	COUNTY	TOTAL SHEETS	SHEET NO.
PLANNING RESOURCES INC. 402 West Lincoln Drive Wheaton, Illinois 60187 Ph. 630. 665. 3796 Fax: 630. 665. 8125		CHECKED — KLG	REVISED — 11/30/2009			29	09-00056-00-LS	COOK	62	27
	PLOT SCALE = 1'=20'	DRAWN — BCL/RJA	REVISED — 12/30/2009			CONTRACT NO. 63321				
	PLOT DATE = 8/21/2009	CHECKED — KLG/LMV	REVISED —		SCALE: 1"=20' SHEET NO. 27 OF 62 SHEETS STA. 51+00 TO STA. 57+00	FED. ROAD DIST. NO.	ILLINOIS	FED. AID PROJECT ARA-9003(343)		