F.A.U. RTE.	SECTION	COUNTY	TOTAL SHEETS	SHEET NO.
2552	14-00161-00-BR	WILL	86	1
		ILLINOIS CONTRACT NO. 61C38		

03-04-2016 LETTING ITEM 092

PLAN VERSION: FINAL SUBMITTAL
12/7/2015

FOR INDEX OF SHEETS, SEE SHEET NO. 2
FOR HIGHWAY STANDARDS, SEE SHEET NO. 2

DESIGN DESIGNATION

29,000 (40) MINOR ARTERIAL 5.36 (PCC–20)

TRAFFIC DATA

ADT: 25,000 (2040)
PV: 97% SU: 0% MU: 3%
POSTED SPEED: 45 MPH
DESIGN SPEED: 45 MPH

FEDERAL AID PROGRAM ENGINEER: FAWAD AQUEEL, P.E. (847) 705–4021 SCHAUMBURG, IL

STATE OF ILLINOIS
DEPARTMENT OF TRANSPORTATION
DIVISION OF HIGHWAYS

PLANS FOR PROPOSED FEDERAL–AID HIGHWAY

FAU 2552 (WASHINGTON STREET)
OAK BLUFF COURT/ROCK RIVER COURT TO RING ROAD
SECTION 14–00161–00–BR
PROJECT NO. BRS • M–4003(356)
BRIDGE PEDESTRIAN IMPROVEMENTS
CITY OF NAPERVILLE
WILL COUNTY

C–91–381–14

WASHINGTON STREET IMPROVEMENTS END
STA. 102 + 00.00 (ROADWAY)
STA. 104 + 65.81 (ROADSIDE)

DU PAGE RIVER BRIDGE
S.N. 099–3326
BEGIN STA. 99 + 43.24
END STA. 100 + 56.77

WASHINGTON STREET IMPROVEMENTS BEGIN
STA. 96 + 56.63 (ROADSIDE)
STA. 98 + 00.00 (ROADWAY)

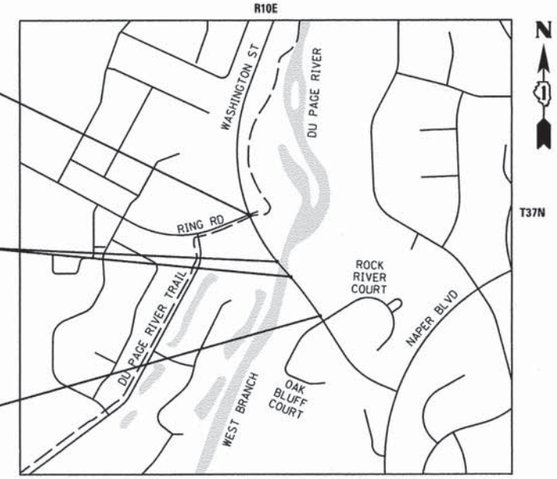

LOCATION MAP
N.T.S.

NET AND GROSS LENGTH OF IMPROVEMENTS: 809 FT (0.15 MILE)
BRIDGE IMPROVMENTS: 108.85 FT (0.2 MILE)

LOCATION OF SECTION INDICATED THUS: –

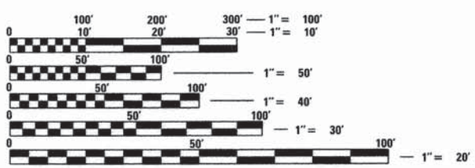

FULL SIZE PLANS HAVE BEEN PREPARED USING STANDARD ENGINEERING SCALES. REDUCED SIZED PLANS WILL NOT CONFORM TO STANDARD SCALES. IN MAKING MEASUREMENTS ON REDUCED PLANS, THE ABOVE SCALES MAY BE USED.

J.U.L.I.E.
JOINT UTILITY LOCATION INFORMATION FOR EXCAVATION
1–800–892–0123
OR 811

PETER F. ROSS 062.056768 LICENSED PROFESSIONAL ENGINEER OF ILLINOIS
DATE: 12–14–2015
EXP: 11–30–2017
SHEETS 1–36, 65–86

LICENSED STRUCTURAL ENGINEER PRABHU ANANTHAN 081-006743 STATE OF ILLINOIS
DATE: 12–14–2015
EXP: 11–30–2016
SHEETS 37–64

CMT
Crawford, Murphy & Tilly
550 N Commons Drive, Suite 116
Aurora, Illinois 60504
P: 630.820.3022 | F: 630.820.0350
www.cmtengr.com | Centered in Value
License No. 184-000613 © Copyright CMT, Inc.

STATE OF ILLINOIS
DEPARTMENT OF TRANSPORTATION
DIVISION OF HIGHWAYS

APPROVED Dec. 14 20 15
DIRECTOR OF NAPERVILLE T.E.D. BUSINESS GROUP

PASSED December 17 20 15
CHRISTOPHER HOLT
DISTRICT ONE ENGINEER OF LOCAL ROADS & STREETS

RELEASING FOR BID BASED ON LIMITED REVIEW December 17 20 15
DEPUTY DIRECTOR OF HIGHWAYS, REGION ONE ENGINEER

PRINTED BY THE AUTHORITY OF THE STATE OF ILLINOIS

CONTRACT NO. 61C38

INDEX OF SHEETS

GENERAL NOTES

1. ALL CONSTRUCTION SHALL BE PERFORMED IN ACCORDANCE WITH THE ILLINOIS DEPARTMENT OF TRANSPORTATION "STANDARD SPECIFICATIONS FOR ROAD AND BRIDGE CONSTRUCTION", ADOPTED JANUARY 1, 2012. (HEREINAFTER REFERRED TO AS THE STANDARD SPECIFICATIONS; THE "SUPPLEMENTAL SPECIFICATIONS AND RECURRING SPECIAL PROVISIONS", ADOPTED JANUARY 1, 2016; THE LATEST EDITION OF THE "ILLINOIS MANUAL ON UNIFORM TRAFFIC CONTROL DEVICES FOR STREETS; THE DETAILS ON THESE PLANS AND THE SPECIAL PROVISIONS INCLUDED IN THE CONTRACT DOCUMENTS.
2. IT SHALL BE THE CONTRACTOR'S RESPONSIBILITY TO ASCERTAIN EXISTING FIELD CONDITIONS PRIOR TO BIDDING ON THIS CONTRACT. PRIOR TO BEGINNING CONSTRUCTION, THE CONTRACTOR SHALL NOTE ANY CHANGES FROM THESE ENGINEERING PLANS AND SHALL NOTIFY THE RESIDENT ENGINEER IMMEDIATELY OF ANY EXISTING CONDITIONS THAT DEVIATE FROM THE INTENT OF THE ENGINEERING PLANS SUCH AS CHANGES IN DRAINAGE, GEOMETRICS, OR GRADING.
3. THE CONTRACTOR SHALL MAINTAIN THE SITE IN A CLEAN AND ORDERLY MANNER. DEBRIS AND ANY SURPLUS MATERIAL SHALL BE REMOVED FROM THE SITE AND RESTORATION SHALL BE INITIATED AS THE WORK PROGRESSES.
4. PRIOR TO BEGINNING ANY EXCAVATION, THE CONTRACTOR SHALL CONTACT "JULIE" AT 1-800-892-0123 OR 811 FOR FIELD LOCATIONS OF ALL BURIED UTILITIES.
5. ALL UTILITIES, SCHOOL DISTRICTS, LOCAL POLICE, FIRE DEPARTMENTS AND THE CITY OF NAPERVILLE ENGINEERING AND PUBLIC WORKS DEPARTMENTS SHALL BE NOTIFIED BY THE CONTRACTOR PRIOR TO THE START OF CONSTRUCTION.
6. EXISTING UTILITIES ARE SHOWN ON THE PLANS ACCORDING TO INFORMATION OBTAINED FROM THE LOCAL AGENCIES, OWNERS, FIELD SURVEYS, AND UTILITY COMPANIES. THE ACCURACY AND COMPLETNESS OF SAID INFORMATION IS NOT GUARANTEED. IT SHALL BE THE RESPONSIBILITY OF THE CONTRACTOR TO VERIFY THE LOCATION OF EXISTING UTILITIES WITHIN THE PROJECT IMPROVEMENT LIMITS.
7. THE CONTRACTOR SHALL TAKE ALL PRECAUTIONS AND PROTECTIVE MEASURES NECESSARY TO MAINTAIN AND PROTECT EXISTING UTILITIES THAT ARE TO BE KEPT IN OPERATION DURING CONSTRUCTION.
8. THE CONTRACTOR SHALL KEEP EXISTING ADJACENT STREETS CLEAN AND FREE OF DIRT, MUD, AND OTHER DEBRIS AND, WHEN NECESSARY, CLEAN SAID STREETS WHEN DIRECTED BY THE ENGINEER. NO ADDITIONAL COMPENSATION WILL BE GRANTED FOR THIS WORK.
9. WHEN DIRECTED BY THE ENGINEER, THE CONTRACTOR SHALL USE THE FOLLOWING METHOD TO SUPRESS DUST AND PREVENT A NUISANCE WITHIN THE LIMITS OF THE PROJECT SITE. DUST SHALL BE CONTROLLED BY THE UNIFORM APPLICATION OF SPRINKLED WATER AND SHALL BE APPLIED ONLY WHEN DIRECTED BY THE ENGINEER, IN A TIMELY MANNER, AND IN A MANNER MEETING THEIR APPROVAL. CALCIUM CHLORIDE SHALL NOT BE USED FOR THIS PURPOSE. NO ADDITIONAL COMPENSATION SHALL BE ALLOWED.
10. WHERE NEW PAVEMENT STRUCTURES ABUT EXISTING PAVEMENT STRUCTURES, A CLEAN AND NEAT FULL DEPTH SAW CUT SHALL BE MADE. SAW CUTTING WILL NOT BE PAID FOR SEPARATELY, BUT SHALL BE CONSIDERED INCLUDED IN THE COST OF THE ITEM BEING REMOVED.
11. THE CONTRACTOR SHALL MAINTAIN POSITIVE DRAINAGE FLOWS AT ALL TIMES THROUGHOUT THE DURATION OF THE CONTRACT. METHODS USED BY THE CONTRACTOR SHALL BE SUBJECT TO THE APPROVAL OF THE ENGINEER. THE COST OF MAINTAINING DRAINAGE FLOWS SHALL BE INCLUDED IN THE COST OF THE VARIOUS DRAINAGE ITEMS.

HIGHWAY STANDARDS

DISTRICT ONE STANDARD DETAILS

BD32	BUTT JOINT AND HMA TAPER DETAILS
BD34	DETAILS FOR DEPRESSED CURB & GUTTER AND SHOULDER TREATMNENT AT TBT TY. 1 SPL.
TC10	TRAFFIC CONTROL AND PROTECTION FOR SIDE ROADS, INTERSECTIONS, AND DRIVEWAYS
TC13	DISTRICT ONE TYPICAL PAVEMENT MARKINGS
TC14	TRAFFIC CONTROL AND PROTECTION AT TURN BAYS (TO REMAIN OPEN TO TRAFFIC)
TC16	PAVEMENT MARKING LETTERS AND SYMBOLS FOR TRAFFIC STAGING
TC22	ARTERIAL ROAD INFORMATION SIGN
BE215	LIGHTING CONTROLLER SINGLE DOOR
BE301	LIGHT POLE FOUNDATION 40' (12.192 m) TO 47 ½' (14.478 m) M.H. 15" (381 mm) BOLT CIRCLE
BE400	ALUMINUM LIGHT POLE 47'-6" (14.478 m) MOUNTING HEIGHT
BE702	MISC. ELECTRICAL DETAILS SHEET A

CITY OF NAPERVILLE STANDARD DETAILS

290.15	CASTING ADJUSTMENTS FOR STRUCTURES IN PAVED AREAS
290.16	CASTING ADJUSTMENTS FOR STRUCTURES WITHIN THE CURB LINE
290.20	STORM SEWER TRENCH SECTION IN PAVED AREAS
290.21	STORM SEWER TRENCH SECTION IN NON-PAVED AREAS
290.22	GRATING FOR CONCRETE FLARED END SECTION
590.30	SIDEWALK
590.31	SIDEWALK CONSTRUCTION
690.31	TYPICAL TRENCH DETAIL

I.D.O.T. HIGHWAY STANDARD DRAWINGS

000001-06	STANDARD SYMBOLS, ABBREVIATIONS AND PATTERNS
001006	DECIMAL OF AN INCH AND OF A FOOT
280001-07	TEMPORARY EROSION CONTROL SYSTEMS
542301-03	PRECAST REINFORCED CONCRETE FLARED END SECTION
601101-01	CONCRETE HEADWALL FOR PIPE DRAIN
602401-03	MANHOLE TYPE A
602601-03	PRECAST REINFORCED CONCRETE FLAT SLAB TOP
602701-02	MANHOLE STEPS
604001-04	FRAME AND LIDS TYPE 1
604006-05	FRAME AND GRATE TYPE 3
604051-04	FRAME AND GRATE TYPE 11
606001-06	CONCRETE CURB TYPE B AND COMBINATION CONCRETE CURB AND GUTTER
630001-10	STEEL PLATE BEAM GUARDRAIL
630201-06	PCC/HMA STABILIZATION AT STEEL PLATE BEAM GUARDRAIL
631031-13	TRAFFIC BARRIER TERMINAL, TYPE 6
635006-03	REFLECTOR AND TERMINAL MARKER PLACEMENT
635011-02	REFLECTOR MARKER AND MOUNTING DETAILS
701101-04	OFF-ROAD OPERATIONS, MULTILANE, 15' TO 24" FROM PAVEMENT EDGE
701426-07	LANE CLOSURE, MULTILANE, INTERMITTENT OR MOVING OPER., FOR SPEEDS > 45 MPH
701431-10	LANE CLOSURE, MULTILANE, UNDIV. WITH CROSSOVER, FOR SPEEDS > 45 MPH TO 55 MPH
701606-10	URBAN SINGLE LANE CLOSURE, MULTILANE, 2W WITH MOUNTABLE MEDIAN
701801-05	SIDEWALK, CORNER OR CROSSWALK CLOSURE
701901-04	TRAFFIC CONTROL DEVICES
704001-07	TEMPORARY CONCRETE BARRIER
720001-01	SIGN PANEL MOUNTING DETAILS
720006-04	SIGN PANEL ERECTION DETAILS
780001-05	TYPICAL PAVEMENT MARKINGS

SPECIALTY ITEM	SPECIAL PROVISION	CODE NUMBER	DESCRIPTION	UNIT	FUNDING FED/LOCAL TOTAL QUANTITY	STU 80%/20% 0028 SIDEWALK WIDENING	STP-BR 80%/20% 0014 WEARING SURFACE	LOCAL 0%/100% 0043 ELECTRICAL	0042 TRAINEES
•		20100110	TREE REMOVAL (6 TO 15 UNITS DIAMETER)	UNIT	162	162	0	0	0
•		20101000	TEMPORARY FENCE	FOOT	136	136	0	0	0
•		20101100	TREE TRUNK PROTECTION	EACH	3	3	0	0	0
		20200100	EARTH EXCAVATION	CU YD	350	350	0	0	0
		20400800	FURNISHED EXCAVATION	CU YD	545	545	0	0	0
		20800150	TRENCH BACKFILL	CU YD	36	36	0	0	0
		21101505	TOPSOIL EXCAVATION AND PLACEMENT	CU YD	604	604	0	0	0
•		25000210	SEEDING, CLASS 2A	ACRE	0.3	0.3	0	0	0
•		25000300	SEEDING, CLASS 3	ACRE	0.1	0.1	0	0	0
•		25000312	SEEDING, CLASS 4A	ACRE	0.1	0.1	0	0	0
•		25000314	SEEDING, CLASS 4B	ACRE	0.1	0.1	0	0	0
•		25000400	NITROGEN FERTILIZER NUTRIENT	POUND	36	36	0	0	0
•		25000500	PHOSPHORUS FERTILIZER NUTRIENT	POUND	36	36	0	0	0
•		25000600	POTASSIUM FERTILIZER NUTRIENT	POUND	36	36	0	0	0
•		25100630	EROSION CONTROL BLANKET	SQ YD	1641	1641	0	0	0
•		25100635	HEAVY DUTY EROSION CONTROL BLANKET	SQ YD	1048	1048	0	0	0
•		28000250	TEMPORARY EROSION CONTROL SEEDING	POUND	56	56	0	0	0
•		28000305	TEMPORARY DITCH CHECKS	FOOT	140	140	0	0	0
•		28000400	PERIMETER EROSION BARRIER	FOOT	1356	1356	0	0	0
•		28000510	INLET FILTERS	EACH	4	4	0	0	0
•		28001100	TEMPORARY EROSION CONTROL BLANKET	SQ YD	2688	2688	0	0	0
		28100105	STONE RIPRAP, CLASS A3	SQ YD	30	30	0	0	0
		28100107	STONE RIPRAP, CLASS A4	SQ YD	120	120	0	0	0
		28200200	FILTER FABRIC	SQ YD	150	150	0	0	0
		31101180	SUBBASE GRANULAR MATERIAL, TYPE B 2"	SQ YD	780	780	0	0	0
		40600635	LEVELING BINDER (MACHINE METHOD), N70	TON	111	0	111	0	0
		40600982	HOT-MIX ASPHALT SURFACE REMOVAL - BUTT JOINT	SQ YD	50	0	50	0	0
		40600990	TEMPORARY RAMP	SQ YD	394	0	394	0	0
		40603565	POLYMERIZED HOT-MIX ASPHALT SURFACE COURSE, MIX "E", N70	TON	155	0	155	0	0
	•	40800027	POLYMERIZED BITUMINOUS MATERIALS (PRIME COAT)	POUND	1068	0	1068	0	0
		42400100	PORTLAND CEMENT CONCRETE SIDEWALK 4 INCH	SQ FT	7,022	7022	0	0	0
		44000500	COMBINATION CURB AND GUTTER REMOVAL	FOOT	890	322	568	0	0
		44000600	SIDEWALK REMOVAL	SQ FT	752	752	0	0	0
		44004250	PAVED SHOULDER REMOVAL	SQ YD	152	152	0	0	0
		44200132	PAVEMENT PATCHING, TYPE II, 11 INCH	SQ YD	17	17	0	0	0
		50102400	CONCRETE REMOVAL	CU YD	208.4	201.0	7.4	0.0	0

SPECIALTY ITEM	SPECIAL PROVISION	CODE NUMBER	DESCRIPTION	UNIT	FUNDING FED/LOCAL TOTAL QUANTITY	STU 80%/20% 0028 SIDEWALK WIDENING	STP-BR 80%/20% 0014 WEARING SURFACE	LOCAL 0%/100% 0043 ELECTRICAL	0042 TRAINEES
*		50104000	BRIDGE RAIL REMOVAL	FOOT	219	219	0	0	0
		50200100	STRUCTURE EXCAVATION	CU YD	329.8	329.8	0.0	0.0	0
		50200300	COFFERDAM EXCAVATION	CU YD	124.2	124.2	0.0	0.0	0
	•	50201101	COFFERDAM (TYPE 1) (LOCATION - 1)	EACH	1	1	0	0	0
	•	50201102	COFFERDAM (TYPE 1) (LOCATION - 2)	EACH	1	1	0	0	0
	•	50201103	COFFERDAM (TYPE 1) (LOCATION - 3)	EACH	1	1	0	0	0
		50300225	CONCRETE STRUCTURES	CU YD	324.8	315.0	9.8	0.0	0
		50300255	CONCRETE SUPERSTRUCTURE	CU YD	62.1	62.1	0.0	0.0	0
		50300260	BRIDGE DECK GROOVING	SQ YD	657	0	657	0	0
		50300300	PROTECTIVE COAT	SQ YD	985	304	681	0	0
		50400505	PRECAST PRESTRESSED CONCRETE DECK BEAMS (27" DEPTH)	SQ FT	2,625	2625	0	0	0
		50500105	FURNISHING AND ERECTING STRUCTURAL STEEL	LSUM	1.0	0.5	0.0	0.5	0
		50500505	STUD SHEAR CONNECTORS	EACH	493	493	0	0	0
		50800205	REINFORCEMENT BARS, EPOXY COATED	POUND	54,110	54110	0	0	0
		50800515	BAR SPLICERS	EACH	110	0	110	0	0
*		50901720	BICYCLE RAILING	FOOT	452	452	0	0	0
*		50901750	PARAPET RAILING	FOOT	219	219	0	0	0
		52000110	PREFORMED JOINT STRIP SEAL	FOOT	176	40	136	0	0
		54213657	PRECAST REINFORCED CONCRETE FLARED END SECTIONS 12"	EACH	1	1	0	0	0
	•	54213669	PRECAST REINFORCED CONCRETE FLARED END SECTIONS 24"	EACH	1	1	0	0	0
		550A0050	STORM SEWERS, CLASS A, TYPE 1 12"	FOOT	33	33	0	0	0
		550A0410	STORM SEWERS, CLASS A, TYPE 2 24"	FOOT	14	14	0	0	0
		550A0640	STORM SEWERS, CLASS A, TYPE 3 12"	FOOT	40	40	0	0	0
		55100500	STORM SEWER REMOVAL 12"	FOOT	74	74	0	0	0
		55101200	STORM SEWER REMOVAL 24"	FOOT	40	40	0	0	0
		58700300	CONCRETE SEALER	SQ FT	1,697	1697	0	0	0
		59000200	EPOXY CRACK INJECTION	FOOT	113	113	0	0	0
		59100100	GEOCOMPOSITE WALL DRAIN	SQ YD	310	310	0	0	0
		60100060	CONCRETE HEADWALLS FOR PIPE DRAINS	EACH	1	1	0	0	0
		60218500	MANHOLES, TYPE A, 4'-DIAMETER, TYPE 3 FRAME AND GRATE	EACH	1	1	0	0	0
		60219300	MANHOLES, TYPE A, 4'-DIAMETER, TYPE 11 FRAME AND GRATE	EACH	1	1	0	0	0
		60221100	MANHOLES, TYPE A, 5'-DIAMETER, TYPE 1 FRAME, CLOSED LID	EACH	1	1	0	0	0
		60255500	MANHOLES TO BE ADJUSTED	EACH	3	0	3	0	0
		60260100	INLETS TO BE ADJUSTED	EACH	1	0	1	0	0
		60500040	REMOVING MANHOLES	EACH	1	1	0	0	0
		60500060	REMOVING INLETS	EACH	2	2	0	0	0

SPECIALTY ITEM	SPECIAL PROVISION	CODE NUMBER	DESCRIPTION	UNIT	FUNDING FED/LOCAL TOTAL QUANTITY	STU 80%/20% 0028 SIDEWALK WIDENING	STP-BR 80%/20% 0014 WEARING SURFACE	LOCAL 0%/100% 0043 ELECTRICAL	0042 TRAINEES
		60603800	COMBINATION CONCRETE CURB AND GUTTER, TYPE B-6.12	FOOT	447	156	291	0	0
		60604400	COMBINATION CONCRETE CURB AND GUTTER, TYPE B-6.18	FOOT	457	291	166	0	0
•		63000001	STEEL PLATE BEAM GUARDRAIL, TYPE A, 6 FOOT POSTS	FOOT	600	600	0	0	0
•		63100085	TRAFFIC BARRIER TERMINAL, TYPE 6	EACH	4	4	0	0	0
•		63100167	TRAFFIC BARRIER TERMINAL, TYPE 1 (SPECIAL) TANGENT	EACH	4	4	0	0	0
•		63200310	GUARDRAIL REMOVAL	FOOT	958	958	0	0	0
		67100100	MOBILIZATION	LSUM	1.00	0.83	0.16	0.01	0
		70106800	CHANGEABLE MESSAGE SIGN	CAL MO	10	10	0	0	0
•		70107005	PAVEMENT MARKING BLACKOUT TAPE, 5"	FOOT	3,262	1631	1631	0	0
•		70107007	PAVEMENT MARKING BLACKOUT TAPE, 7"	FOOT	325	162	163	0	0
		70300100	SHORT TERM PAVEMENT MARKING	FOOT	1,000	500	500	0	0
•		70300510	PAVEMENT MARKING TAPE, TYPE III - LETTERS AND SYMBOLS	SQ FT	176	88	88	0	0
•		70300520	PAVEMENT MARKING TAPE, TYPE III 4"	FOOT	10,485	5242	5243	0	0
•		70300540	PAVEMENT MARKING TAPE, TYPE III 6"	FOOT	1,100	550	550	0	0
•		70301000	WORK ZONE PAVEMENT MARKING REMOVAL	SQ FT	5,735	2867	2868	0	0
•		70400100	TEMPORARY CONCRETE BARRIER	FOOT	325	325	0	0	0
•		70400200	RELOCATE TEMPORARY CONCRETE BARRIER	FOOT	325	325	0	0	0
•		70600235	IMPACT ATTENUATORS, TEMPORARY (FULLY REDIRECTIVE), TEST LEVEL 2	EACH	2	2	0	0	0
•		70600320	IMPACT ATTENUATORS, RELOCATE (FULLY REDIRECTIVE), TEST LEVEL 2	EACH	2	2	0	0	0
•		72400710	RELOCATE SIGN PANEL - TYPE 1	SQ FT	13	13	0	0	0
•		78000200	THERMOPLASTIC PAVEMENT MARKING - LINE 4"	FOOT	1,080	0	1080	0	0
•		78000400	THERMOPLASTIC PAVEMENT MARKING - LINE 6"	FOOT	24	0	24	0	0
•		78005110	EPOXY PAVEMENT MARKING - LINE 4"	FOOT	493	0	493	0	0
•	•	78200410	GUARDRAIL MARKERS, TYPE A	EACH	16	16	0	0	0
•	•	78201000	TERMINAL MARKER - DIRECT APPLIED	EACH	4	4	0	0	0
•		81028200	UNDERGROUND CONDUIT, GALVANIZED STEEL, 2" DIA.	FOOT	196	196	0	0	0
•		81028410	UNDERGROUND CONDUIT, PVC, 6" DIA.	FOOT	381	0	0	381	0
•		81603045	UNIT DUCT, 600V, 3-1C NO.6, 1/C NO.6 GROUND, (XLP-TYPE USE), 1" DIA. POLYETHYLENE	FOOT	306	306	0	0	0
•		81800330	AERIAL CABLE, 3-1/C NO. 6 WITH MESSENGER WIRE	FOOT	387	387	0	0	0
•		83010600	LIGHT POLE, ALUMINUM, 50 FT. M.H., 15 FT. MAST ARM	EACH	2	2	0	0	0
•		83057405	LIGHT POLE, WOOD, 70 FOOT, CLASS 3, WITH 15FT MAST ARM	EACH	1	1	0	0	0
•		83600300	LIGHT POLE FOUNDATION, 30" DIAMETER	FOOT	26	26	0	0	0
•		84200500	REMOVAL OF LIGHTING UNIT, SALVAGE	EACH	2	2	0	0	0
•		84200804	REMOVAL OF POLE FOUNDATION	EACH	2	2	0	0	0
•		84400405	RELOCATE EXISTING WOOD POLES	EACH	1	1	0	0	0
•	•	85000200	MAINTENANCE OF EXISTING TRAFFIC SIGNAL INSTALLATION	EACH	2	2	0	0	0

SPECIALTY ITEM	SPECIAL PROVISION	CODE NUMBER	DESCRIPTION	UNIT	TOTAL QUANTITY	0028 SIDEWALK WIDENING	0014 WEARING SURFACE	0043 ELECTRICAL	0042 TRAINEES
					FUNDING	STU	STP-BR	LOCAL	
					FED/LOCAL	80%/20%	80%/20%	0%/100%	
•	•	89502376	REBUILD EXISTING HANDHOLE	EACH	1	1	0	0	0
•		A2004420	TREE, GINKGO BILOBA (GINKGO), 2-1/2" CALIPER, BALLED AND BURLAPPED	EACH	3	3	0	0	0
•		A2004620	TREE, GLEDITSIA TRIACANTHOS INERMIS (THORNLESS COMMON HONEYLOCUST), 2-1/2" CALIPER, BALLED AND BURLAPPED	EACH	2	2	0	0	0
•		A2006520	TREE, QUERCUS BICOLOR (SWAMP WHITE OAK), 2-1/2" CALIPER, BALLED AND BURLAPPED	EACH	7	7	0	0	0
•		K0013030	PERENNIAL PLANTS, WETLAND TYPE, 2" DIAMETER BY 4" DEEP PLUG	UNIT	1.1	1.1	0	0	0
	•	X0320047	REMOVAL OF EXISTING PRECAST PRESTRESSED CONCRETE DECK BEAMS	SQ FT	875	875	0	0	0
	•	X0322936	REMOVE EXISTING FLARED END SECTION	EACH	2	2	0	0	0
	•	X0324455	DRILLING AND SETTING SOLDIER PILES (IN SOIL)	CU FT	3,633	3633	0	0	0
	•	X0324456	DRILLING AND SETTING SOLDIER PILES (IN ROCK)	CU FT	796	796	0	0	0
	•	X4401198	HOT-MIX ASPHALT SURFACE REMOVAL, VARIABLE DEPTH	SQ YD	1582	0	1582	0	0
	•	X5030305	CONCRETE WEARING SURFACE, 5"	SQ YD	681	0	681	0	0
	•	X5860110	GRANULAR BACKFILL FOR STRUCTURES	CU YD	198	198	0	0	0
	•	X6013600	PIPE UNDERDRAINS 4" (MODIFIED)	FOOT	42	42	0	0	0
*	•	X6330705	RUB RAIL	FOOT	288	288	0	0	0
	•	X7010216	TRAFFIC CONTROL AND PROTECTION, (SPECIAL)	LSUM	1.0	0.5	0.5	0.0	0
•	•	X8140115	HANDHOLE TO BE ADJUSTED	EACH	1	1	0	0	0
•	•	X8440102	RELOCATE EXISTING LUMINAIRE	EACH	2	2	0	0	0
•	•	X8900010	TEMPORARY TRAFFIC SIGNAL INTERCONNECT	EACH	2	2	0	0	0
•	•	X8950450	REMOVE EXISTING UNDERGROUND CONDUIT	FOOT	131	86	0	45	0
•	•	XX006729	PERIMETER EROSION BARRIER, ROLLED EXCELSIOR	FOOT	136	136	0	0	0
	•	Z0004560	BRIDGE WEARING SURFACE REMOVAL	SQ YD	5,255	0	5255	0	0
	•	Z0005216	HOT-MIX ASPHALT STABILIZATION 6" AT STEEL PLATE BEAM GUARD RAIL	SQ YD	352	352	0	0	0
	•	Z0007118	UNTREATED TIMBER LAGGING	SQ FT	1,678	1678	0	0	0
	•	Z0012754	STRUCTURAL REPAIR OF CONCRETE (DEPTH EQUAL TO OR LESS THAN 5 INCHES)	SQ FT	36	36	0	0	0
	•	Z0013797	STABILIZED CONSTRUCTION ENTRANCE	SQ YD	62	62	0	0	0
	•	Z0013798	CONSTRUCTION LAYOUT	LSUM	1.00	0.83	0.16	0.01	0
	•	Z0018900	DRILL AND GROUT DOWEL BARS	EACH	552	552	0	0	0
	•	Z0026404	FURNISHING SOLDIER PILES (W SECTION)	FOOT	814	814	0	0	0
	•	Z0030850	TEMPORARY INFORMATION SIGNING	SQ FT	51	51	0	0	0
•	•	Z0033028	MAINTENANCE OF LIGHTING SYSTEM	CAL MO	5	5	0	0	0
	•	Z0046304	PIPE UNDERDRAINS FOR STRUCTURES 4"	FOOT	239	239	0	0	0
	•	Z0049790	RELOCATING NAME PLATES	EACH	1	1	0	0	0
	•	Z0076600	TRAINEES	HOUR	500	0	0	0	500
	•	Z0076604	TRAINEES TRAINING PROGRAM GRADUATE	HOUR	500	0	0	0	500

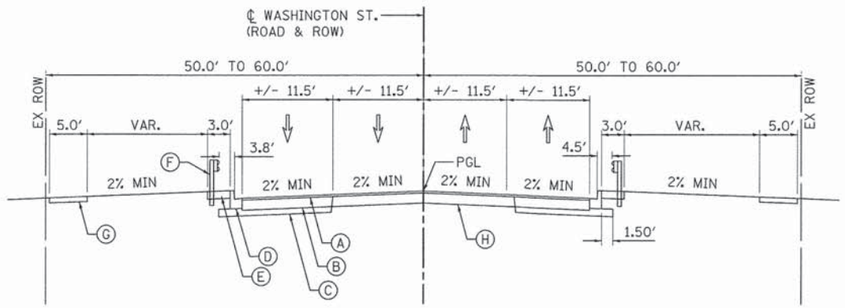

EXISTING TYPICAL SECTION

WASHINGTON STREET
STA. 96+56.63 TO STA. 99+43.24

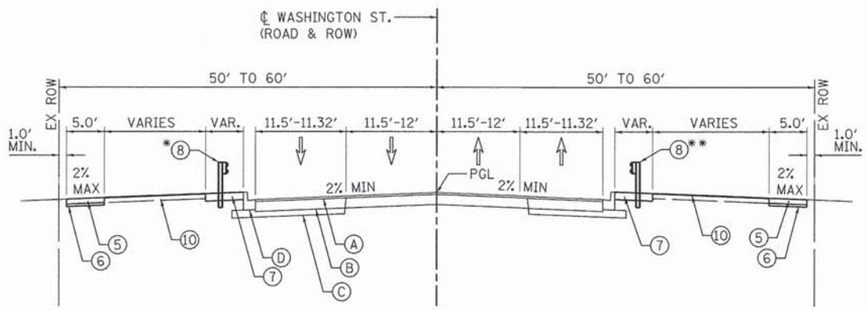

PROPOSED TYPICAL SECTION

WASHINGTON STREET
STA. 96+56.63 TO STA. 98+00.00
* GUARDRAIL BEGINS STA. 96+84.93
** GUARDRAIL BEGINS STA. 97+12.72

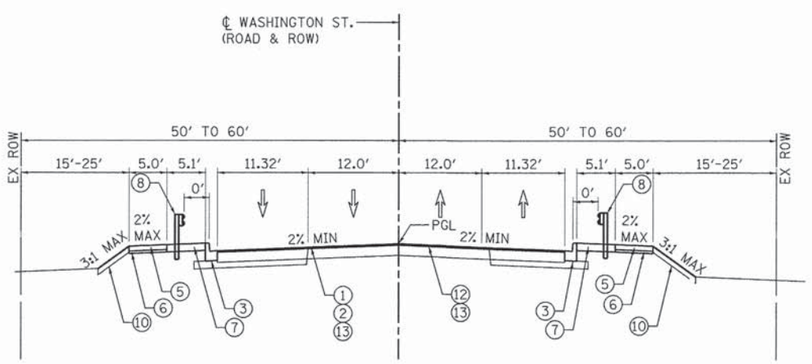

PROPOSED TYPICAL SECTION

WASHINGTON STREET
STA. 98+00.00 LT TO STA. 98+74.63 LT
STA. 98+00.00 RT TO STA. 98+82.79 RT

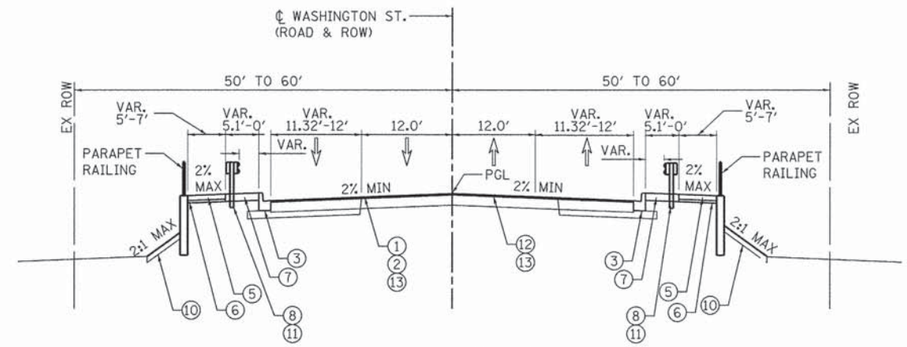

PROPOSED TYPICAL SECTION

WASHINGTON STREET
STA. 98+74.63 LT TO STA. 99+26.31 LT
STA. 98+82.79 RT TO STA. 99+64.15 RT

BRIDGE OMISSION

WASHINGTON STREET
STA. 99+26.31 LT TO STA. 100+36.19
STA. 99+64.15 RT TO STA. 100+73.28

EXISTING LEGEND

- (A) HMA SURFACE COURSE
- (B) HMA BINDER COURSE
- (C) HMA BASE COURSE
- (D) B-6.12 CC&G
- (E) HMA SHOLDER
- (F) EXIST. GUARDRAIL
- (G) EXIST. PCC SIDEWALK
- (H) PRE-1986 HMA ROADWAY
- (I) SUB-BASE GRANULAR MATERIAL

PROPOSED LEGEND

- (1) HMA SURF REM VAR DP 0" TO 3" (X4401198)
- (2) P HMA SC "E" N70, 1 ¾" (40603565)
- (3) COMB CC&G TB6.12 (60603800)
- (4) COMB CC&G TB6.18 (60604400)
- (5) PC CONC SIDEWALK 4 (42400100)
- (6) SUB GRAN MAT B 2 (31101180)
- (7) HMA STAB 6 AT SPBGR (Z0005216)
- (8) SPBGR TY A 6FT POSTS (63000001)
- (9) GUARDRAIL REMOV (63200310)
- (10) TOPSOIL F & P 4 (21101615)
- (11) RUB RAIL (X6330705)
- (12) LEVELING BINDER (MACHINE METHOD), N70, 1 ¼" (40600635)
- (13) POLYMERIZED BITUMINOUS MATERIALS (PRIME COAT) (40800027)

FILE NAME = L:\Naperville\15238-01_Washington\Ph2\Draw\CADD_Sheets\sht-typicals_01.dgn

CMT
License No. 184-000613

USER NAME = Peter Ross	DESIGNED - JR	REVISED -	
	DRAWN - JR	REVISED -	
PLOT SCALE = 10.0000 ' / in.	CHECKED - PR	REVISED -	
PLOT DATE = 12/12/2015 11:12:10 AM	DATE - 12/7/2015	REVISED -	

STATE OF ILLINOIS
DEPARTMENT OF TRANSPORTATION

TYPICAL SECTIONS
WASHINGTON STREET

SCALE: N.T.S. | SHEET 1 OF 2 SHEETS | STA. - TO STA. -

F.A.U. RTE.	SECTION	COUNTY	TOTAL SHEETS	SHEET NO.
2552	14-00161-00-BR	WILL	86	7
		CONTRACT NO. 61C38		
		ILLINOIS FED. AID PROJECT DPC-M-4003(356)		

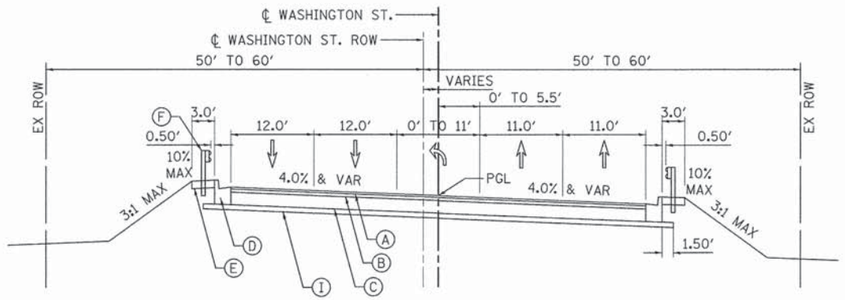

EXISTING TYPICAL SECTION

WASHINGTON STREET
STA. 100+56.77 TO STA. 104+65.81

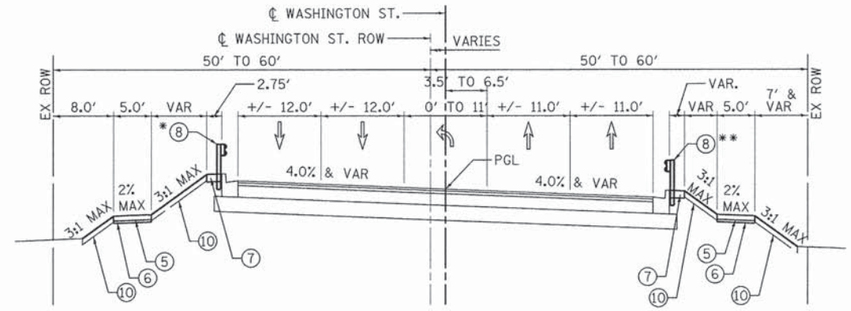

PROPOSED TYPICAL SECTION

WASHINGTON STREET
STA. 102+00.00 TO STA. 104+65.81
* GUARDRAIL ENDS STA. 103+56.18
** GUARDRAIL ENDS STA. 102+30.39

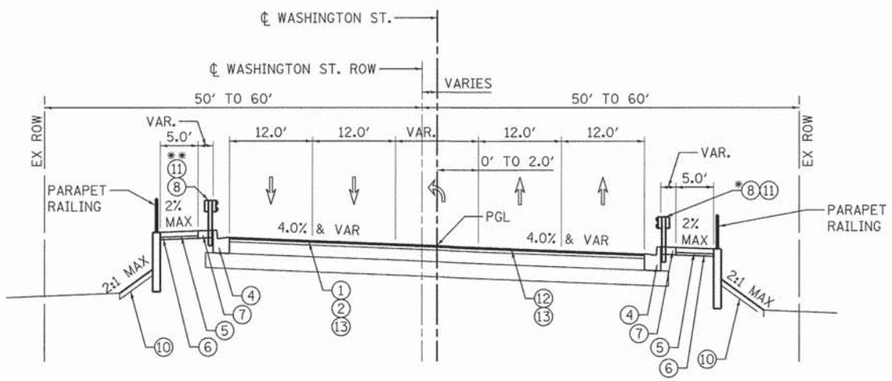

PROPOSED TYPICAL SECTION

WASHINGTON STREET
STA. 100+36.19 LT TO STA. 100+96.21 LT
STA. 100+73.28 RT TO STA. 101+43.61 RT
* 0' FROM FACE OF GUARDRAIL TO FACE OF CURB
** 0' FROM FACE OF GUARDRAIL TO FACE OF CURB

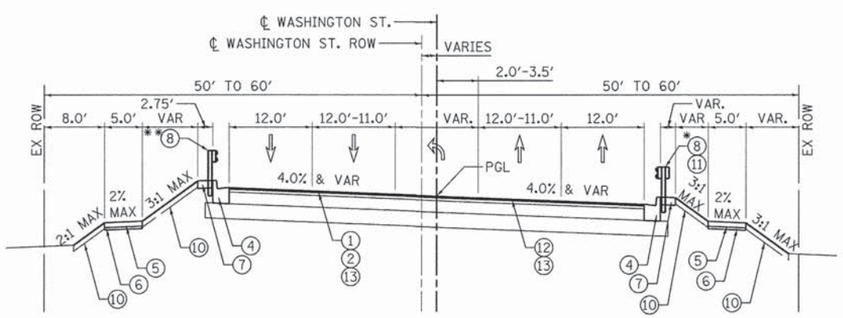

PROPOSED TYPICAL SECTION

WASHINGTON STREET
STA. 100+96.21 LT TO STA. 102+00.00 LT
STA. 101+43.61 RT TO STA. 102+00.00 RT
* 0' FROM FACE OF GUARDRAIL TO FACE OF CURB
** 0' FROM FACE OF GUARDRAIL TO FACE OF CURB

EXISTING LEGEND

- (A) HMA SURFACE COURSE
- (B) HMA BINDER COURSE
- (C) HMA BASE COURSE
- (D) B-6.12 CC&G
- (E) HMA SHOLDER
- (F) EXIST. GUARDRAIL
- (G) EXIST. PCC SIDEWALK
- (H) PRE-1986 HMA ROADWAY
- (I) SUB-BASE GRANULAR MATERIAL

PROPOSED LEGEND

1. HMA SURF REM VAR DP 0" TO 3" (X4401198)
2. P HMA SC "E" N70, 1 ¾" (40603565)
3. COMB CC&G TB6.12 (60603800)
4. COMB CC&G TB6.18 (60604400)
5. PC CONC SIDEWALK 4 (42400100)
6. SUB GRAN MAT B 2 (31101180)
7. HMA STAB 6 AT SPBGR (Z0005216)
8. SPBGR TY A 6FT POSTS (63000001)
9. GUARDRAIL REMOV (63200310)
10. TOPSOIL F & P 4 (21101615)
11. RUB RAIL (X6330705)
12. LEVELING BINDER (MACHINE METHOD), N70, 1 ¼" (40600635)
13. POLYMERIZED BITUMINOUS MATERIALS (PRIME COAT) (40800027)

HOT-MIX ASPHALT MIXTURE REQUIREMENTS

PAY ITEM DESCRIPTION	MIX TYPE	LIFT THICKNESS	AIR VOIDS @ Ndes
HOT-MIX ASPHALT SURFACE COURSE			
P HMA SC "E" N70 (40603565)	IL 9.5 mm	1 ¾"	4% @ 70 GYR.
HOT-MIX ASPHALT LEVELING BINDER			
LEVELING BINDER (MACHINE METHOD), N70 (40600635)	IL 9.5 mm	1 ¼"	4% @ 70 GYR.
HMA STABILIZATION AT SPBGR (Z0005216)			
HMA BINDER COURSE, IL-19.0, N50		2 ¼" Min.	4% @ 50 GYR.
HMA SURFACE COURSE, MIX "D", N50	IL 9.5 mm	1 ½"	4% @ 50 GYR.

NOTE:

1. THE UNIT WEIGHT USED TO CALCULATE ALL HMA SURFACE MIXTURE QUANTITIES IS 112 LBS/SQ YD/IN.
2. THE "AC TYPE" FOR POLYMERIZED HMA MIXES SHALL BE "SBS/SBR PG 76-22" AND FOR NON-POLYMERIZED HMA THE "AC TYPE" SHALL BE "PG 64 -22" UNLESS MODIFIED BY DISTRICT ONE SPECIAL PROVISIONS.
3. FOR USE OF RECYCLED MATERIALS SEE SPECIAL PROVISIONS.

REMOVAL SCHEDULES

TREE REMOVAL (6 TO 15 UNITS DIAMETER) (20100110)				
SHEET	STATION	OFFSET	LT/RT	QUANTITY (SQ YD)
REMOVAL PLAN	97+15.00	37.63	RT	9
REMOVAL PLAN	97+15.00	37.63	RT	6
REMOVAL PLAN	97+42.00	29.24	RT	7
REMOVAL PLAN	97+42.00	29.24	RT	6
REMOVAL PLAN	97+42.00	29.24	RT	6
REMOVAL PLAN	97+42.00	29.24	RT	6
REMOVAL PLAN	97+42.00	29.24	RT	6
REMOVAL PLAN	98+57.00	52.41	RT	7.5
REMOVAL PLAN	98+57.00	52.41	RT	7.5
REMOVAL PLAN	98+57.00	52.41	RT	7
REMOVAL PLAN	98+78.00	41.91	RT	11
REMOVAL PLAN	98+86.00	40.36	RT	8
REMOVAL PLAN	99+02.00	46.2	RT	6
REMOVAL PLAN	99+02.00	46.2	RT	6
REMOVAL PLAN	99+02.00	46.2	RT	6
REMOVAL PLAN	99+06.00	53.72	RT	6
REMOVAL PLAN	99+12.00	52.11	RT	7
REMOVAL PLAN	99+12.00	52.11	RT	6
REMOVAL PLAN	99+61.00	46.57	RT	8
REMOVAL PLAN	99+73.00	48.64	RT	8
REMOVAL PLAN	101+07.00	44.74	RT	6
REMOVAL PLAN	101+07.00	44.74	RT	6
REMOVAL PLAN	100+64.00	41.77	LT	10
TOTAL				162

PAVED SHOULDER REMOVAL (44004250)				
SHEET	STATION FROM	STATION TO	LT/RT	QUANTITY (SQ YD)
REMOVAL PLAN	100+77.00	102+32.00	LT/RT	46
REMOVAL PLAN	100+36.00	103+71.00	LT/RT	106
TOTAL				152

SIDEWALK REMOVAL (44000600)				
SHEET	STATION FROM	STATION TO	LT/RT	QUANTITY (SQ FT)
REMOVAL PLAN	97+30.00	98+28.00	LT	476
REMOVAL PLAN	96+70.00	97+26.00	RT	276
TOTAL				752

COMBINATION CURB AND GUTTER REMOVAL (44000500)				
SHEET	STATION FROM	STATION TO	LT/RT	QUANTITY (FOOT)
REMOVAL PLAN	96+57.00	97+35.00	LT	78
REMOVAL PLAN	96+85.00	97+63.00	RT	78
REMOVAL PLAN	98+00.00	99+23.00	LT	123
REMOVAL PLAN	98+00.00	99+60.00	RT	160
REMOVAL PLAN	100+38.00	102+00.00	LT	162
REMOVAL PLAN	100+77.00	102+00.00	RT	123
REMOVAL PLAN	103+06.00	103+90.00	LT	84
REMOVAL PLAN	101+80.00	102+62.00	RT	82
TOTAL				890

STORM SEWER REMOVAL 12" (55100500)				
SHEET	STATION FROM	STATION TO	LT/RT	QUANTITY (FOOT)
REMOVAL PLAN	98+50.00	98+89.24	RT	44
REMOVAL PLAN	98+89.24	99+01.85	RT	20
REMOVAL PLAN	98+90.20	98+89.24	RT	10
TOTAL				74

STORM SEWER REMOVAL 24" (55100200)				
SHEET	STATION FROM	STATION TO	LT/RT	QUANTITY (FOOT)
REMOVAL PLAN	100+58.84	100+93.32	LT	40
TOTAL				40

REMOVING MANHOLES (60500040)				
SHEET	STATION	OFFSET	LT/RT	QUANTITY (EACH)
REMOVAL PLAN	98+89.24	33.8	RT	1
TOTAL				1

REMOVING INLETS (60500060)				
SHEET	STATION	OFFSET	LT/RT	QUANTITY (EACH)
REMOVAL PLAN	98+90.00	23.3	RT	1
REMOVAL PLAN	100+93.00	25.5	LT	1
TOTAL				2

GUARDRAIL REMOVAL (63200310)				
SHEET	STATION FROM	STATION TO	LT/RT	QUANTITY (FOOT)
REMOVAL PLAN	96+86.00	99+26.00	LT	240
REMOVAL PLAN	97+26.00	99+66.00	RT	240
REMOVAL PLAN	100+36.00	103+58.00	LT	327
REMOVAL PLAN	100+76.00	102+27.00	RT	151
TOTAL				958

HOT-MIX ASPHALT SURFACE REMOVAL, VARIABLE DEPTH (X4401198)				
SHEET	STATION FROM	STATION TO	LT/RT	QUANTITY (SQ YD)
REMOVAL PLAN	98+00.00	99+43.23	LT/RT	752
REMOVAL PLAN	100+56.77	102+00.00	LT/RT	830
TOTAL				1582

HOT-MIX ASPHALT REMOVAL - BUTT JOINT (40600982)				
SHEET	STATION	WIDTH (FT)	LENGTH (FT)	QUANTITY (SQ YD)
REMOVAL PLAN	98+00.00	46.64	4.5	23
REMOVAL PLAN	102+00.00	44.00	4.5	27
TOTAL				50

ROADWAY SCHEDULES

SUBBASE GRANULAR MATERIAL, TYPE B 2" (31101180)				
SHEET	STATION FROM	STATION TO	LT/RT	QUANTITY (SQ YD)
PLAN AND PROFILE	97+30.00	99+25.29	LT	117
PLAN AND PROFILE	96+70.37	99+69.78	RT	191
PLAN AND PROFILE	100+30.22	104+65.74	LT	259
PLAN AND PROFILE	100+74.74	104+63.40	RT	213
TOTAL				780

POLYMERIZED HOT-MIX ASPHALT SURFACE COURSE, MIX "E", N70 (40603565)				
SHEET	STATION FROM	STATION TO	LT/RT	QUANTITY (TON)
PLAN AND PROFILE	98+00.00	99+45.27	LT/RT	74
PLAN AND PROFILE	100+54.73	102+00.00	LT/RT	81
TOTAL				155

LEVELING BINDER (MACHINE METHOD), N70 (40600635)				
SHEET	STATION FROM	STATION TO	LT/RT	QUANTITY (TON)
PLAN AND PROFILE	98+00.00	99+45.27	LT/RT	53
PLAN AND PROFILE	100+54.73	102+00.00	LT/RT	58
TOTAL				111

POLYMERIZED BITUMINOUS MATERIALS (PRIME COAT) (40800027)				
SHEET	STATION FROM	STATION TO	LT/RT	QUANTITY (POUND)
PLAN AND PROFILE	98+00.00	99+45.27	LT/RT	338
PLAN AND PROFILE	100+54.73	102+00.00	LT/RT	374
PLAN AND PROFILE	98+00.00	99+45.27	LT/RT	169
PLAN AND PROFILE	100+54.73	102+00.00	LT/RT	187
TOTAL				1068

STEEL PLATE BEAM GUARDRAIL, TYPE A, 6 FOOT POSTS (63000001)				
SHEET	STATION FROM	STATION TO	LT/RT	QUANTITY (FOOT)
PLAN AND PROFILE	97+35.51	98+82.52	LT	150
PLAN AND PROFILE	97+62.48	99+21.73	RT	162
PLAN AND PROFILE	100+78.27	103+07.43	LT	225
PLAN AND PROFILE	101+17.48	101+79.09	RT	63
TOTAL				600

HOT-MIX ASPHALT STABILIZATION 6" AT STEEL PLATE BEAM GUARD RAIL (Z0005216)				
SHEET	STATION FROM	STATION TO	LT/RT	QUANTITY (SQ YD)
PLAN AND PROFILE	96+56.63	98+99.88	LT	99
PLAN AND PROFILE	96+85.01	98+99.95	RT	114
PLAN AND PROFILE	101+15.02	103+89.32	LT	95
PLAN AND PROFILE	101+00.00	102+61.71	RT	44
TOTAL				352

RUB RAIL (X6330705)				
SHEET	STATION FROM	STATION TO	LT/RT	QUANTITY (FOOT)
PLAN AND PROFILE - SIDEWALK DETAILS	98+93.71	99+24.96	LT	31
PLAN AND PROFILE - SIDEWALK DETAILS	98+93.71	99+65.58	RT	72
PLAN AND PROFILE - SIDEWALK DETAILS	100+34.42	101+18.80	LT	85
PLAN AND PROFILE - SIDEWALK DETAILS	100+75.04	101+75.04	RT	100
TOTAL				288

TRAFFIC BARRIER TERMINAL, TYPE 6 (63100085)		
SHEET	LOCATION	QUANTITY (EACH)
PLAN AND PROFILE	NW BRIDGE QUANDRANT	1
PLAN AND PROFILE	NE BRIDGE QUANDRANT	1
PLAN AND PROFILE	SW BRIDGE QUANDRANT	1
PLAN AND PROFILE	SE BRIDGE QUANDRANT	1
TOTAL		4

TRAFFIC BARRIER TERMINAL, TYPE 1 (SPECIAL) TANGENT (63100167)		
SHEET	LOCATION	QUANTITY (EACH)
PLAN AND PROFILE	NW BRIDGE QUANDRANT	1
PLAN AND PROFILE	NE BRIDGE QUANDRANT	1
PLAN AND PROFILE	SW BRIDGE QUANDRANT	1
PLAN AND PROFILE	SE BRIDGE QUANDRANT	1
TOTAL		4

PORTLAND CEMENT CONCRETE SIDEWALK 4 INCH (42400100)				
SHEET	STATION FROM	STATION TO	LT/RT	QUANTITY (SQ FT)
PLAN AND PROFILE	97+30.00	99+25.29	LT	1053
PLAN AND PROFILE	96+70.37	99+69.78	RT	1718
PLAN AND PROFILE	100+30.22	104+65.74	LT	2333
PLAN AND PROFILE	100+74.74	104+63.40	RT	1918
TOTAL				7022

COMBINATION CONCRETE CURB AND GUTTER, TYPE B-6.12 (60603800)				
SHEET	STATION FROM	STATION TO	LT/RT	QUANTITY (FOOT)
PLAN AND PROFILE	96+57.00	97+35.00	LT	78
PLAN AND PROFILE	96+85.00	97+63.00	RT	78
PLAN AND PROFILE	98+00.00	99+25.67	LT	126
PLAN AND PROFILE	98+00.00	99+64.88	RT	165
TOTAL				447

COMBINATION CONCRETE CURB AND GUTTER, TYPE B-6.18 (60604400)				
SHEET	STATION FROM	STATION TO	LT/RT	QUANTITY (FOOT)
PLAN AND PROFILE	100+35.12	102+00.00	LT	165
PLAN AND PROFILE	100+74.33	102+00.00	RT	126
PLAN AND PROFILE	103+06.00	103+90.00	LT	84
PLAN AND PROFILE	101+80.00	102+62.00	RT	82
TOTAL				457

EROSION AND SEDIMENT CONTROL SCHEDULES

TEMPORARY FENCE (20101000)

SHEET	LOCATION	QUANTITY (FOOT)
EROSION CONTROL AND SEDIMENT	N. BRIDGE - STAGE 1	20
EROSION CONTROL AND SEDIMENT	S. BRIDGE - STAGE 2	103
EROSION CONTROL AND SEDIMENT	N. BRIDGE - STAGE 2	13
TOTAL		136

TREE TRUNK PROTECTION (20101100)

SHEET	STATION	OFFSET	LT/RT	QUANTITY (EACH)
EROSION CONTROL AND SEDIMENT	102+50.50	52.1	LT	1
EROSION CONTROL AND SEDIMENT	102+93.60	50.6	LT	1
EROSION CONTROL AND SEDIMENT	103+29.76	49.5	LT	1
TOTAL				3

TEMPORARY EROSION CONTROL SEEDING (28000250)

SHEET	LOCATION	QUANTITY (POUND)
EROSION CONTROL AND SEDIMENT	S. BRIDGE - STAGE 1	11
EROSION CONTROL AND SEDIMENT	N. BRIDGE - STAGE 2	19
EROSION CONTROL AND SEDIMENT	S. BRIDGE - STAGE 2	14
EROSION CONTROL AND SEDIMENT	N. BRIDGE - STAGE 2	12
TOTAL		56

TEMPORARY EROSION CONTROL BLANKET (28001100)

SHEET	LOCATION	QUANTITY (SQ YD)
EROSION CONTROL AND SEDIMENT	S. BRIDGE - STAGE 1	533
EROSION CONTROL AND SEDIMENT	N. BRIDGE - STAGE 2	911
EROSION CONTROL AND SEDIMENT	S. BRIDGE - STAGE 2	676
EROSION CONTROL AND SEDIMENT	N. BRIDGE - STAGE 2	568
TOTAL		2688

INLET FILTERS (28000510)

SHEET	STATION FROM	OFFSET	LT/RT	QUANTITY (EACH)
EROSION CONTROL AND SEDIMENT	98+90.27	23.3	LT	1
EROSION CONTROL AND SEDIMENT	100+93.30	25.5	LT	1
EROSION CONTROL AND SEDIMENT	98+90.20	23.3	RT	1
EROSION CONTROL AND SEDIMENT	102+18.68	26.7	RT	1
TOTAL				4

PERIMETER EROSION BARRIER (28000400)

SHEET	LOCATION	QUANTITY (FOOT)
EROSION CONTROL AND SEDIMENT	S. BRIDGE - STAGE 1	207
EROSION CONTROL AND SEDIMENT	N. BRIDGE - STAGE 1	500
EROSION CONTROL AND SEDIMENT	S. BRIDGE - STAGE 2	277
EROSION CONTROL AND SEDIMENT	N. BRIDGE - STAGE 2	372
TOTAL		1356

PERIMETER EROSION BARRIER, ROLLED EXCELSIOR (XX006729)

SHEET	LOCATION	QUANTITY (FOOT)
EROSION CONTROL AND SEDIMENT	N. BRIDGE - STAGE 1	20
EROSION CONTROL AND SEDIMENT	S. BRIDGE - STAGE 2	103
EROSION CONTROL AND SEDIMENT	N. BRIDGE - STAGE 2	13
TOTAL		136

STONE RIPRAP, CLASS A3 (28100105)

SHEET	STATION	OFFSET	LT/RT	QUANTITY (SQ YD)
EROSION CONTROL AND SEDIMENT	98+99.10	54.1	RT	30
TOTAL				0

ADDITIONAL QUANTITY NOTED ON STRUCTURAL PLANS

STONE RIPRAP, CLASS A4 (28100107)

SHEET	STATION	OFFSET	LT/RT	QUANTITY (SQ YD)
EROSION CONTROL AND SEDIMENT	100+84.78	47.4	RT	38
TOTAL				0

ADDITIONAL QUANTITY NOTED ON STRUCTURAL PLANS

FILTER FABRIC (28200200)

SHEET	STATION	OFFSET	LT/RT	QUANTITY (SQ YD)
EROSION CONTROL AND SEDIMENT	98+99.10	54.1	RT	30
EROSION CONTROL AND SEDIMENT	100+84.78	47.4	RT	38
TOTAL				68

DRAINAGE AND UTILITY SCHEDULES

STORM SEWERS, CLASS A, TYPE 1 12" (550A0050)

SHEET	STATION FROM	STATION TO	LT/RT	QUANTITY (FOOT)
DRAINAGE AND UTILITIES	98+55.00	98+90.00	RT	33
TOTAL				33

STORM SEWERS, CLASS A, TYPE 2 24" (550A0410)

SHEET	STATION FROM	STATION TO	LT/RT	QUANTITY (FOOT)
DRAINAGE AND UTILITIES	100+93.00	100+84.80	LT	14
TOTAL				14

STORM SEWERS, CLASS A, TYPE 3 12" (550A0640)

SHEET	STATION FROM	STATION TO	LT/RT	QUANTITY (FOOT)
DRAINAGE AND UTILITIES	98+55.00	98+99.00	RT	40
TOTAL				40

PRECAST REINFORCED CONCRETE FLARED END SECTIONS 12" (54213657)

SHEET	STATION	OFFSET	LT/RT	QUANTITY (EACH)
DRAINAGE AND UTILITIES	98+99.00	54	RT	1
TOTAL				1

PRECAST REINFORCED CONCRETE FLARED END SECTIONS 24" (54213669)

SHEET	STATION	OFFSET	LT/RT	QUANTITY (EACH)
DRAINAGE AND UTILITIES	100+84.80	48	LT	1
TOTAL				1

MANHOLES, TYPE A, 4'-DIAMETER, TYPE 3 FRAME AND GRATE (60218500)

SHEET	STATION	OFFSET	LT/RT	QUANTITY (EACH)
DRAINAGE AND UTILITIES	100+93.00	25.5	LT	1
TOTAL				1

MANHOLES, TYPE A, 4'-DIAMETER, TYPE 11 FRAME AND GRATE (60219300)

SHEET	STATION	OFFSET	LT/RT	QUANTITY (EACH)
DRAINAGE AND UTILITIES	98+90.00	23.3	RT	1
TOTAL				1

MANHOLES, TYPE A, 5'-DIAMETER, TYPE 1 FRAME, CLOSED LID (60221100)

SHEET	STATION	OFFSET	LT/RT	QUANTITY (EACH)
DRAINAGE AND UTILITIES	98+55.00	33	RT	1
TOTAL				1

MANHOLES TO BE ADJUSTED (60255500)

SHEET	STATION	OFFSET	LT/RT	QUANTITY (EACH)
DRAINAGE AND UTILITIES	92+27.97	18.6	RT	1
DRAINAGE AND UTILITIES	101+13.89	19.7	RT	1
DRAINAGE AND UTILITIES	101+93.00	22	LT	1
TOTAL				3

INLETS TO BE ADJUSTED (60260100)

SHEET	STATION	OFFSET	LT/RT	QUANTITY (EACH)
DRAINAGE AND UTILITIES	98+90.27	23.3	LT	1
TOTAL				1

UNDERGROUND CONDUIT, GALVANIZED STEEL, 2" DIA (81028200)

SHEET	STATION FROM	STATION TO	LT/RT	QUANTITY (FOOT)
ROADWAY DETAILS	99+55.00	99+67.00	RT	12
ROADWAY DETAILS	99+67.00	100+77.00	RT	110
ROADWAY DETAILS	100+77.00	101+51.00	RT	74
TOTAL				196

UNDERGROUND CONDUIT, PVC, 6" DIA (81028410)

SHEET	STATION FROM	STATION TO	LT/RT	QUANTITY (FOOT)
ROADWAY DETAILS	99+58.00	99+66.00	RT	24
ROADWAY DETAILS	99+66.00	100+75.00	RT	327
ROADWAY DETAILS	100+75.00	100+85.00	RT	30
TOTAL				381

UNIT DUCT, 600V, 3-1C NO.6, 1/C NO.6 GROUND, (XLP-TYPE USE), 1" DIA. POLYETHYLENE (881603045)

SHEET	STATION FROM	STATION TO	LT/RT	QUANTITY (FOOT)
ROADWAY LIGHTING	97+68.5	99+30.0	RT	167
ROADWAY LIGHTING	100+52.0	101+84.7	LT	139
TOTAL				306

LANDSCAPING SCHEDULES

SEEDING, CLASS 2A (25000210)		
SHEET	LOCATION	QUANTITY (ACRE)
PAVEMENT MARKING AND LANDSCAPING	SW BRIDGE	0.09
PAVEMENT MARKING AND LANDSCAPING	NW BRIDGE	0.13
PAVEMENT MARKING AND LANDSCAPING	SE BRIDGE	0.07
PAVEMENT MARKING AND LANDSCAPING	NE BRIDGE	0.06
TOTAL		0.3

SEEDING, CLASS 3 (25000300)		
SHEET	LOCATION	QUANTITY (ACRE)
PAVEMENT MARKING AND LANDSCAPING	SW BRIDGE	0.02
PAVEMENT MARKING AND LANDSCAPING	NW BRIDGE	0.02
PAVEMENT MARKING AND LANDSCAPING	SE BRIDGE	0.03
PAVEMENT MARKING AND LANDSCAPING	NE BRIDGE	0.06
TOTAL		0.1

SEEDING, CLASS 4A (25000312)		
SHEET	LOCATION	QUANTITY (ACRE)
PAVEMENT MARKING AND LANDSCAPING	NW BRIDGE	0.04
PAVEMENT MARKING AND LANDSCAPING	SE BRIDGE	0.04
TOTAL		0.1

SEEDING, CLASS 4B (25000314)		
SHEET	LOCATION	QUANTITY (ACRE)
PAVEMENT MARKING AND LANDSCAPING	NW BRIDGE	0.01
ROUNDED TOTAL		0.1

NITROGEN FERTILIZER NUTRIENT (25000400)		
SHEET	LOCATION	QUANTITY (POUND)
PAVEMENT MARKING AND LANDSCAPING	SEEDING, CLASS 2A	27
PAVEMENT MARKING AND LANDSCAPING	SEEDING, CLASS 3	9
TOTAL		36

PHOSPHORUS FERTILIZER NUTRIENT (25000500)		
SHEET	LOCATION	QUANTITY (POUND)
PAVEMENT MARKING AND LANDSCAPING	SEEDING, CLASS 2A	27
PAVEMENT MARKING AND LANDSCAPING	SEEDING, CLASS 3	9
TOTAL		36

POTASSIUM FERTILIZER FERTILIZER NUTRIENT (25000600)		
SHEET	LOCATION	QUANTITY (POUND)
PAVEMENT MARKING AND LANDSCAPING	SEEDING, CLASS 2A	27
PAVEMENT MARKING AND LANDSCAPING	SEEDING, CLASS 3	9
TOTAL		36

EROSION CONTROL BLANKET (25100630)		
SHEET	LOCATION	QUANTITY (SQ YD)
PAVEMENT MARKING AND LANDSCAPING	SEEDING, CLASS 2A	1615
PAVEMENT MARKING AND LANDSCAPING	SEEDING, CLASS 4B	26
TOTAL		1641

HEAVY DUTY EROSION CONTROL BLANKET (25100635)		
SHEET	LOCATION	QUANTITY (SQ YD)
PAVEMENT MARKING AND LANDSCAPING	SEEDING, CLASS 3	649
PAVEMENT MARKING AND LANDSCAPING	SEEDING, CLASS 4A	399
TOTAL		1048

PAVEMENT MARKING SCHEDULES

PAVEMENT MARKING BLACKOUT TAPE, 5" (70107005)				
SHEET	STATION FROM	STATION TO	DESCRIPTION	QUANTITY (FOOT)
PAVEMENT MARKING AND LANDSCAPING	-	95+06.05	SKIP DASH	142
PAVEMENT MARKING AND LANDSCAPING	-	95+23.59	DBL YELLOW	600
PAVEMENT MARKING AND LANDSCAPING	95+85.86	104+60.50	SKIP DASH	210
PAVEMENT MARKING AND LANDSCAPING	95+90.18	96+21.92	DBL YELLOW	64
PAVEMENT MARKING AND LANDSCAPING	103+14.83	104+27.93	DBL YELLOW	226
PAVEMENT MARKING AND LANDSCAPING	-	-	SKIP DASH	160
PAVEMENT MARKING AND LANDSCAPING	95+85.54	BRIDGE	SKIP DASH	86
PAVEMENT MARKING AND LANDSCAPING	96+21.92	BRIDGE	DBL YELLOW	644
PAVEMENT MARKING AND LANDSCAPING	100+45.63	104+61.55	SKIP DASH	104
PAVEMENT MARKING AND LANDSCAPING	100+52.93	103+52.01	DBL YELLOW	600
15% CONTINGENCY				426
TOTAL				3262

PAVEMENT MARKING BLACKOUT TAPE, 7" (70107007)				
SHEET	STATION FROM	STATION TO	DESCRIPTION	QUANTITY (FOOT)
PAVEMENT MARKING AND LANDSCAPING	101+67.37	103+07.40	DASHED	35
PAVEMENT MARKING AND LANDSCAPING	103+07.40	104+22.05	SLD. WHITE	115
PAVEMENT MARKING AND LANDSCAPING	-	-	DASHED	29
PAVEMENT MARKING AND LANDSCAPING	103+21.49	-	ONLY	42
PAVEMENT MARKING AND LANDSCAPING	103+46.80	-	LT. ARROW	30
PAVEMENT MARKING AND LANDSCAPING	106+43.52	-	DASHED	31
15% CONTINGENCY				43
TOTAL				325

EPOXY PAVEMENT MARKING - LINE 4" (78005110)				
SHEET	STATION FROM	STATION TO	DESCRIPTION	QUANTITY (FOOT)
PAVEMENT MARKING AND LANDSCAPING	99+45.27	100+54.73	DBL YELL	218.9
PAVEMENT MARKING AND LANDSCAPING	99+53.67	100+63.13	SKIP-DASH	27.4
PAVEMENT MARKING AND LANDSCAPING	99+36.87	100+46.33	SKIP-DASH	27.4
PAVEMENT MARKING AND LANDSCAPING	99+62.08	100+71.53	SLD WHT	109.5
PAVEMENT MARKING AND LANDSCAPING	99+28.47	100+37.92	SLD WHT	109.5
TOTAL				493

PAVEMENT MARKING TAPE, TYPE III - LETTERS AND SYMBOLS (70300510)			
SHEET	LOCATION	DESCRIPTION	QUANTITY (SQ FT)
PAVEMENT MARKING AND LANDSCAPING	NB LEFT TURN LANE	ONLY	21.1
PAVEMENT MARKING AND LANDSCAPING	NB LEFT TURN LANE	LT. ARROW	15.2
PAVEMENT MARKING AND LANDSCAPING	SB THROUGH LANE	ARROW	12.3
PAVEMENT MARKING AND LANDSCAPING	SB THROUGH LANE	ONLY	21.1
PAVEMENT MARKING AND LANDSCAPING	SB TURN LANE	ONLY	21.1
PAVEMENT MARKING AND LANDSCAPING	SB TURN LANE	RT. ARROW	15.2
PAVEMENT MARKING AND LANDSCAPING	SB THROUGH LANE	ARROW	12.3
PAVEMENT MARKING AND LANDSCAPING	SB THROUGH LANE	ONLY	21.1
PAVEMENT MARKING AND LANDSCAPING	SB TURN LANE	ONLY	21.1
PAVEMENT MARKING AND LANDSCAPING	SB TURN LANE	RT. ARROW	15.2
TOTAL			176

PAVEMENT MARKING TAPE, TYPE III 4" (70300520)				
SHEET	STATION FROM	STATION TO	DESCRIPTION	QUANTITY (FOOT)
PAVEMENT MARKING AND LANDSCAPING	-	95+06.05	DBL. YELLOW	1120.6
PAVEMENT MARKING AND LANDSCAPING	-	94+35.14	DBL. YELLOW	502.2
PAVEMENT MARKING AND LANDSCAPING	95+85.86	104+60.78	DBL. YELLOW	1750.8
PAVEMENT MARKING AND LANDSCAPING	-	95+45.68	SOLID WHT.	413
PAVEMENT MARKING AND LANDSCAPING	95+70.29	104+82.77	SOLID WHT.	991.2
PAVEMENT MARKING AND LANDSCAPING	106+00.47	-	SOLID WHT.	808.6
PAVEMENT MARKING AND LANDSCAPING	-	95+06.05	DBL. YELLOW	586.4
PAVEMENT MARKING AND LANDSCAPING	95+85.54	94+35.14	DBL. YELLOW	1758.4
PAVEMENT MARKING AND LANDSCAPING	-	104+60.78	SOLID WHT.	604.9
PAVEMENT MARKING AND LANDSCAPING	95+70.16	95+45.68	SOLID WHT.	82
PAVEMENT MARKING AND LANDSCAPING	97+55.02	104+82.77	SOLID WHT.	583
PAVEMENT MARKING AND LANDSCAPING	98+00.00	-	SOLID WHT.	668.6
PAVEMENT MARKING AND LANDSCAPING	-		SOLID YEL.	615.2
TOTAL				10485

PAVEMENT MARKING TAPE, TYPE III 6" (70300540)				
SHEET	STATION FROM	STATION TO	DESCRIPTION	QUANTITY (FOOT)
PAVEMENT MARKING AND LANDSCAPING	103+29.30	104+60.50	SOLID WHT.	129.4
PAVEMENT MARKING AND LANDSCAPING	103+29.30	104+60.50	SOLID WHT.	130.8
PAVEMENT MARKING AND LANDSCAPING	102+00.00	103+29.30	DASHED	31.8
PAVEMENT MARKING AND LANDSCAPING	105+43.51	-	SOLID WHT.	218.4
PAVEMENT MARKING AND LANDSCAPING	105+43.51	-	SOLID WHT.	215.7
PAVEMENT MARKING AND LANDSCAPING	-	-	DASHED	46.3
PAVEMENT MARKING AND LANDSCAPING	102+00.00	103+07.40	DASHED	27.3
PAVEMENT MARKING AND LANDSCAPING	105+43.83	-	SOLID WHT.	186.6
PAVEMENT MARKING AND LANDSCAPING	106+43.42	-	SOLID WHT.	84.0
PAVEMENT MARKING AND LANDSCAPING	-	-	DASHED	29.3
TOTAL				1100

THERMOPLASTIC PAVEMENT MARKING - LINE 4" (78000200)				
SHEET	STATION FROM	STATION TO	DESCRIPTION	QUANTITY (FOOT)
PAVEMENT MARKING AND LANDSCAPING	98+00.00	99+36.87	SKIP-DASH	34.2
PAVEMENT MARKING AND LANDSCAPING	98+00.00	99+53.67	SKIP-DASH	38.4
PAVEMENT MARKING AND LANDSCAPING	100+46.33	102+00.00	SKIP-DASH	38.4
PAVEMENT MARKING AND LANDSCAPING	100+63.12	102+00.00	SKIP-DASH	34.2
PAVEMENT MARKING AND LANDSCAPING	98+00.00	99+45.27	DBL YELL	290.5
PAVEMENT MARKING AND LANDSCAPING	100+54.73	102+00.00	DBL YELL	290.5
PAVEMENT MARKING AND LANDSCAPING	99+00.00	99+62.08	SLD WHT	62.1
PAVEMENT MARKING AND LANDSCAPING	100+71.52	101+75.25	SLD WHT	103.7
PAVEMENT MARKING AND LANDSCAPING	99+00.00	99+28.47	SLD WHT	28.5
PAVEMENT MARKING AND LANDSCAPING	100+37.92	101+97.77	SLD WHT	159.9
TOTAL				1080

THERMOPLASTIC PAVEMENT MARKING - LINE 6" (78000400)				
SHEET	STATION FROM	STATION TO	DESCRIPTION	QUANTITY (FOOT)
PAVEMENT MARKING AND LANDSCAPING	101+05.48	102+00.00	DASHED	23.6
TOTAL				24

STAGE 1 (CONSTRUCTION IN SOUTHBOUND LANES [LEFT SIDE OF ROAD])

LOCATION	EARTH EXCAVATION	EXCAVATION TO BE USED IN EMBANKMENT, ADJUSTED FOR SHRINKAGE	EMBANKMENT	EARTHWORK BALANCE WASTE (+) OR SHORTAGE (-)	TOPSOIL EXCAVATION	TOPSOIL PLACEMENT	TOPSOIL BALANCE WASTE (+) OR SHORTAGE (-)
	CUBIC YARDS	CUBIC YARDS	CUBIC YARDS	CUBIC YARDS	CUBIC YARDS	CUBIC YARDS	CUBIC YARDS
96+50 TO 98+00	10	9	49	-40	25	15	10
98+00 TO 100+00	47	40	169	-129	40	26	13
100+00 TO 102+00	152	129	151	-22	56	79	-23
102+00 TO 104+50	29	25	34	-9	49	33	15
TOTAL	238	203	403	-200	170	153	15

STAGE 2 (CONSTRUCTION IN NORTHBOUND LANES [RIGHT SIDE OF ROAD])

LOCATION	EARTH EXCAVATION	EXCAVATION TO BE USED IN EMBANKMENT, ADJUSTED FOR SHRINKAGE	EMBANKMENT	EARTHWORK BALANCE WASTE (+) OR SHORTAGE (-)	TOPSOIL EXCAVATION	TOPSOIL PLACEMENT	TOPSOIL BALANCE WASTE (+) OR SHORTAGE (-)
	CUBIC YARDS	CUBIC YARDS	CUBIC YARDS	CUBIC YARDS	CUBIC YARDS	CUBIC YARDS	CUBIC YARDS
96+50 TO 98+00	1	1	18	-17	63	4	59
98+00 TO 100+00	45	38	172	-134	151	30	121
100+00 TO 102+00	65	55	114	-59	89	22	67
102+00 TO 104+50	1	1	136	-135	131	27	104
TOTAL	112	95	440	-345	434	83	351

PAY ITEM TOTALS

ITEM	UNIT	QUANTITY
EARTH EXCAVATION	CU YD	350
FURNISHED EXCAVATION	CU YD	545
TOPSOIL EXCAVATION & PLACEMENT	CU YD	604

EARTH EXCAVATION NOTES

1. EXCESS EXCAVATION, IF NOT UTILIZED AS EMBANKMENT, SHALL BE COMPLETELY REMOVED FROM THE CONSTRUCTION SITE AND DISPOSED OF OFF-SITE BY THE CONTRACTOR AND BE CONSIDERED INCLUDED IN THE COST OF "EARTH EXCAVATION" (20200100).
2. EXCESS TOPSOIL, IF NOT USED FOR PLACEMENT, SHALL BE COMPLETELY REMOVED FROM THE CONSTRUCTION SITE AND DISPOSED OF OFF-SITE BY THE CONTRACTOR AND BE CONSIDERED INCLUDED IN THE COST OF "TOPSOIL EXCAVATION AND PLACEMENT."
3. CLEARING AND GRUBBING OF ALL LOGS, SHRUBS, BUSHES, SAMPLINGS, GRASS, WEEDS, OTHER VEGETATION AND STUMPS OF A DIAMETER LESS THAN 6 INCHES AS WELL AS THE REMOVAL AND DISPOSAL OF ALL OBSTRUCTIONS TO PROPOSED IMPROVEMENTS INCLUDING BUT NOT LIMITED TO ACCUMULATIONS OF RUBBISH AND EXISTING STRUCTURES NOT SHOWN TO BE REMOVED AS A SEPARATE PAY ITEM SHALL BE INCLUDED IN THE COST OF "EARTH EXCAVATION" (20200100).
4. SHRINKAGE FACTOR USED IN CALCULATIONS = 15%
5. BASED ON GEOTECHNICAL STUDY, EXISTING TOPSOIL ASSUMED TO BE FOUR INCHES DEEP ON WEST ROADSIDE AND 12 INCHES DEEP ON EAST ROADSIDE. PROPOSED TOPSOIL DEPTH WILL BE FOUR INCHES, EXCEPT IN THE BIOSWALE AREA WHERE A 12 INCH DEPTH WILL BE USED AS SHOWN ON SHEET 28 .

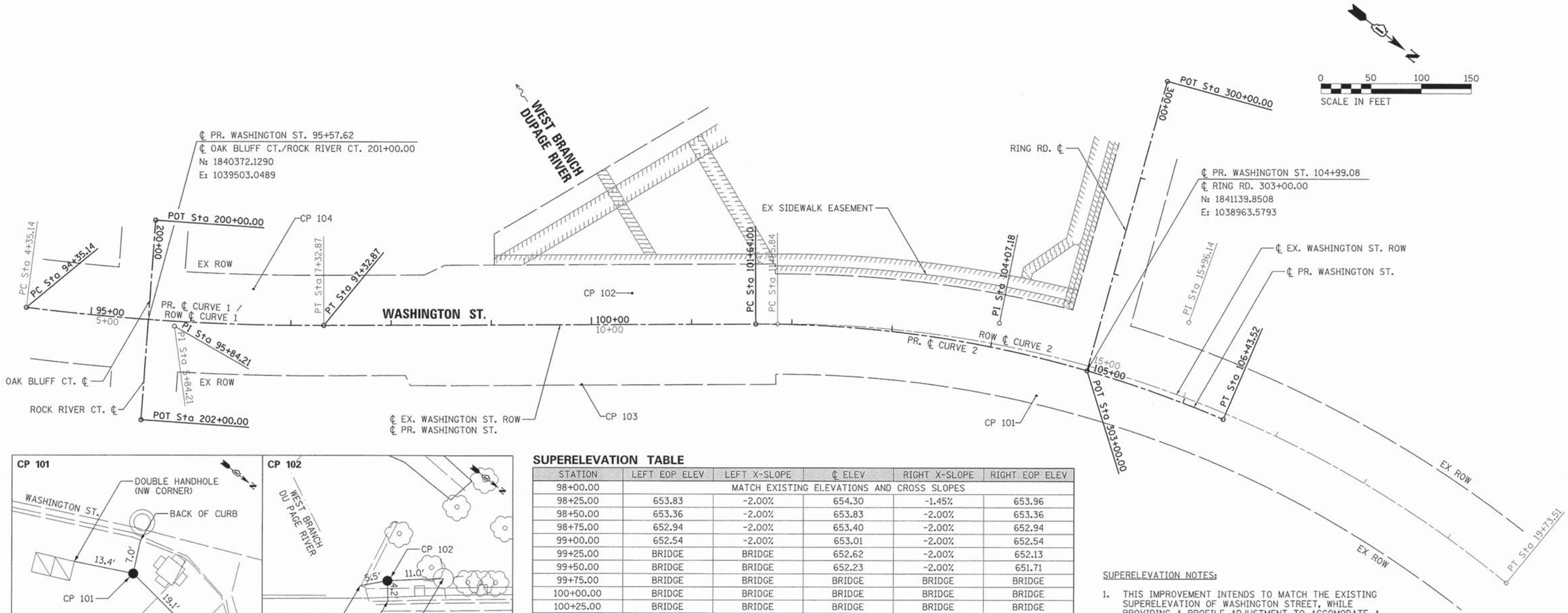

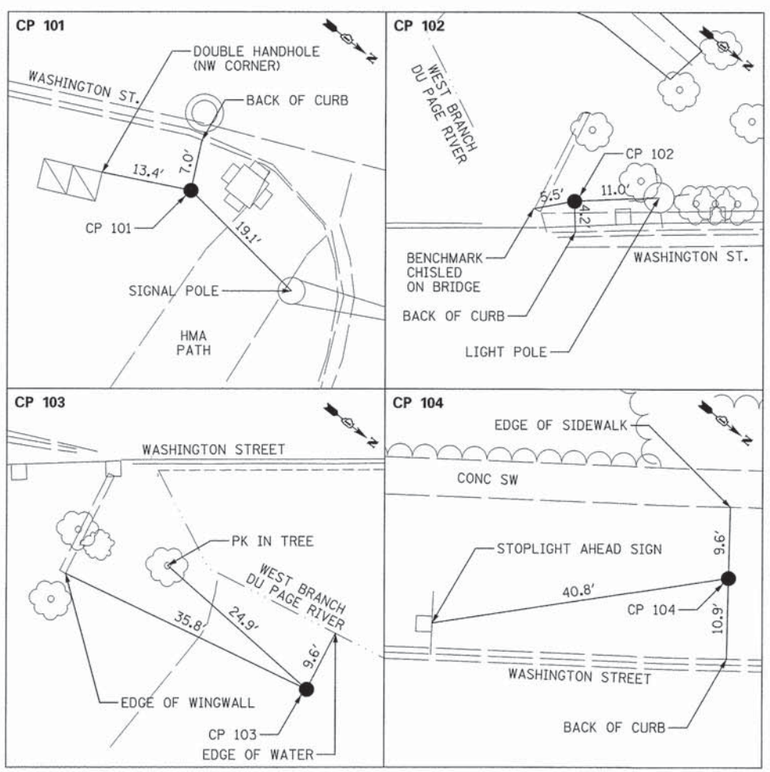

SUPERELEVATION TABLE

STATION	LEFT EOP ELEV	LEFT X-SLOPE	℄ ELEV	RIGHT X-SLOPE	RIGHT EOP ELEV
98+00.00	MATCH EXISTING ELEVATIONS AND CROSS SLOPES				
98+25.00	653.83	-2.00%	654.30	-1.45%	653.96
98+50.00	653.36	-2.00%	653.83	-2.00%	653.36
98+75.00	652.94	-2.00%	653.40	-2.00%	652.94
99+00.00	652.54	-2.00%	653.01	-2.00%	652.54
99+25.00	BRIDGE	BRIDGE	652.62	-2.00%	652.13
99+50.00	BRIDGE	BRIDGE	652.23	-2.00%	651.71
99+75.00	BRIDGE	BRIDGE	BRIDGE	BRIDGE	BRIDGE
100+00.00	BRIDGE	BRIDGE	BRIDGE	BRIDGE	BRIDGE
100+25.00	BRIDGE	BRIDGE	BRIDGE	BRIDGE	BRIDGE
100+50.00	650.15	-2.00%	650.67	BRIDGE	BRIDGE
100+75.00	649.87	-1.60%	650.28	BRIDGE	BRIDGE
101+00.00	649.71	-0.72%	649.87	-2.00%	649.36
101+25.00	649.54	0.16%	649.50	-2.50%	648.84
101+50.00	649.38	1.04%	649.11	-3.00%	648.32
101+75.00	649.22	-2.43%	648.72	-3.50%	647.79
102+00.00	MATCH EXISTING ELEVATIONS AND CROSS SLOPES				

SUPERELEVATION NOTES:

1. THIS IMPROVEMENT INTENDS TO MATCH THE EXISTING SUPERELEVATION OF WASHINGTON STREET, WHILE PROVIDING A PROFILE ADJUSTMENT TO ACCOMODATE A NEW WEARING SURFACE ON THE BRIDGE. THIS INCLUDES MATCHING THE EXISTING ELEVATION AND CROSS SLOPE AT STATIONS 98+00 AND 102+00, AND MAINTAINING THE EXISTING SUPERELEVATION ON THE RESURFACED APPROACHES TO THE BRIDGE. THE TABLE AT LEFT IS PROVIDED AT GUIDANCE TO ACHIEVE THIS INTENT.

2. FOR PAVEMENT ELEVATIONS AND CROSS SLOPES ON THE BRIDGE, THE STRUCTURAL PLANS SHALL GOVERN.

PROPOSED WASHINGTON STREET CENTERLINE

REFERENCE POINT	STATION	NORTHING	EASTING
PROP. ℄ CURVE 1 - PC	94+35.14	1840268.8507	1039568.8581
PROP. ℄ CURVE 1 - PI	95+84.21	1840396.6688	1039492.1398
PROP. ℄ CURVE 1 - PT	97+32.87	1840513.4724	1039399.5111
PROP. ℄ CURVE 2 - PC	101+64.00	1840851.2772	1039131.6221
PROP. ℄ CURVE 2 - PI	104+07.18	1841041.8090	1038980.5248
PROP. ℄ CURVE 2 - PT	106+43.52	1841276.7619	1038917.8354

EXISTING WASHINGTON STREET ROW CENTERLINE

REFERENCE POINT	STATION	NORTHING	EASTING
ROW ℄ CURVE 1 - PC	4+35.14	1840268.8507	1039568.8581
ROW ℄ CURVE 1 - PI	5+84.21	1840396.6688	1039492.1398
ROW ℄ CURVE 1 - PT	7+32.87	1840513.4724	1039399.5111
ROW ℄ CURVE 2 - PC	11+85.84	1840868.3876	1039118.0530
ROW ℄ CURVE 2 - PI	15+96.14	1841189.8702	1038863.1080
ROW ℄ CURVE 2 - PT	19+73.51	1841600.0843	1038871.6179

PROPOSED WASHINGTON STREET CURVES

PROP. ℄ CURVE 1	PROP. ℄ CURVE 2
PI STA. = 95+84.21	PI STA. = 104+07.18
Δ = 7° 26′ 34″ (LT)	Δ = 23° 28′ 34″ (RT)
D = 2° 29′ 59″	D = 4° 53′ 45″
R = 2,292.01′	R = 1,170.33′
T = 149.07′	T = 243.17′
L = 297.73′	L = 479.52′
E = 4.84′	E = 25.00′
e = 2.4%	e = 4.0%
T.R. = 65.45′	T.R. = 100.30′
S.E. RUN = 54.55′	S.E. RUN = 50.15′
P.C. STA. = 94+35.14	P.C. STA. = 101+64.00
P.T. STA. = 97+32.87	P.T. STA. = 106+43.52

EXISTING RIGHT-OF-WAY CURVES

ROW ℄ CURVE 1	ROW ℄ CURVE 2
PI STA. = 5+84.21	PI STA. = 15+96.14
Δ = 7° 26′ 34″ (LT)	Δ = 39° 36′ 14″ (RT)
D = 2° 29′ 59″	D = 5° 01′ 41″
R = 2,292.01′	R = 1,139.54′
T = 149.07′	T = 410.30′
L = 297.73′	L = 787.67′
E = 4.84′	E = 71.62′
P.C. STA. = 4+35.14	P.C. STA. = 11+85.84
P.T. STA. = 7+32.87	P.T. STA. = 19+73.51

FILE NAME = L:\Naperville\15238-01_WashingtonPh2\Draw\CA00_Sheets\sht-ATBridge

CMT
License No. 184-000613 © Copyright CMT, Inc.

USER NAME = Peter Ross	DESIGNED - JR	REVISED -	
	DRAWN - JR	REVISED -	
PLOT SCALE = 50.0000 ' / in.	CHECKED - PR	REVISED -	
PLOT DATE = 12/12/2015 11:12:15 AM	DATE - 12/7/2015	REVISED -	

STATE OF ILLINOIS
DEPARTMENT OF TRANSPORTATION

ALIGNMENT, TIES & BENCHMARKS
WASHINGTON STREET

SCALE: 1"=50' | SHEET 1 OF 1 SHEETS | STA. 94+35.14 TO STA. 106+43.52

F.A.U. RTE.	SECTION	COUNTY	TOTAL SHEETS	SHEET NO.
2552	14-00161-00-BR	WILL	86	13

CONTRACT NO. 61C38

ILLINOIS FED. AID PROJECT DPC-M-4003(356)

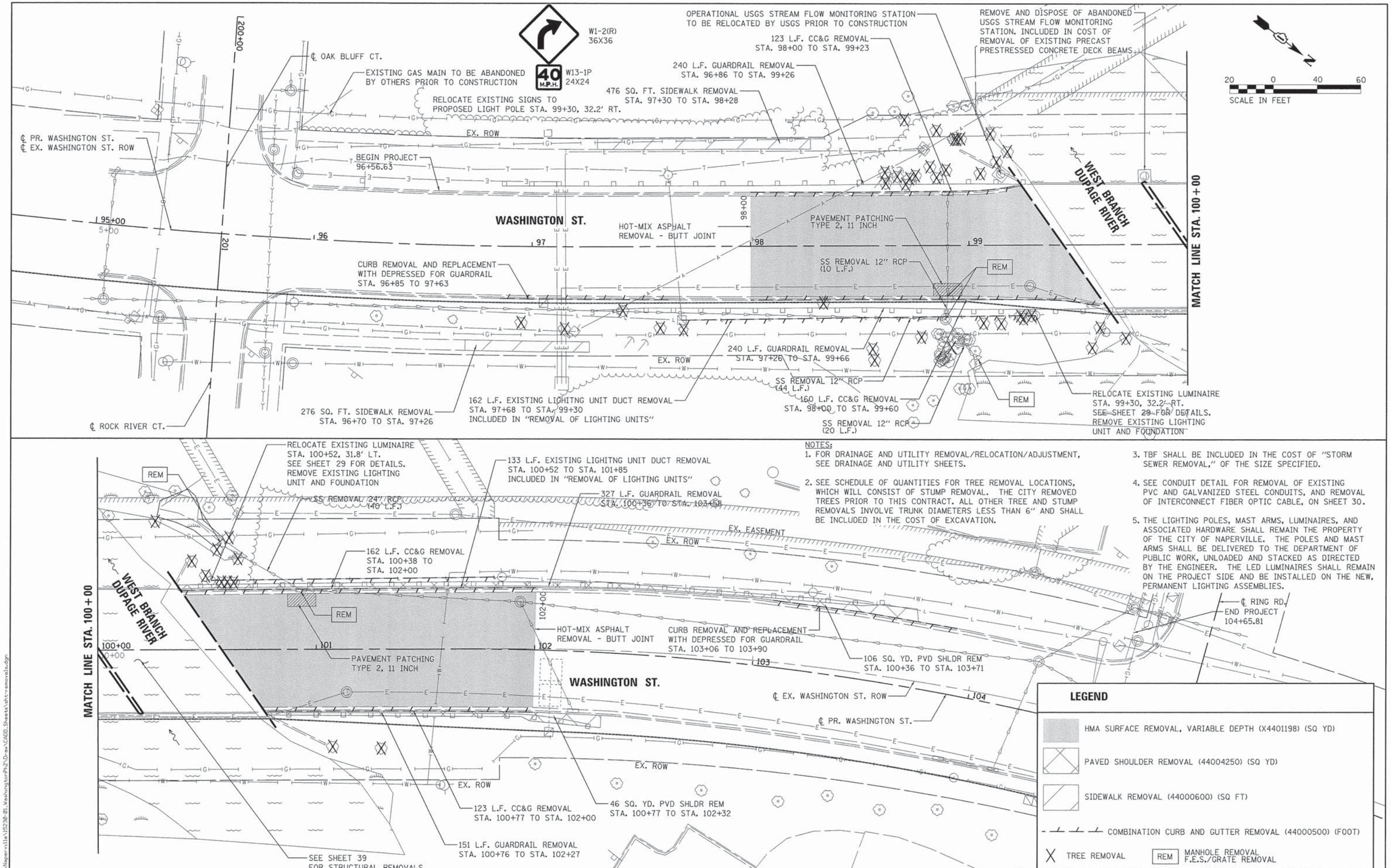

NOTES:

1. FOR DRAINAGE AND UTILITY REMOVAL/RELOCATION/ADJUSTMENT, SEE DRAINAGE AND UTILITY SHEETS.
2. SEE SCHEDULE OF QUANTITIES FOR TREE REMOVAL LOCATIONS, WHICH WILL CONSIST OF STUMP REMOVAL. THE CITY REMOVED TREES PRIOR TO THIS CONTRACT. ALL OTHER TREE AND STUMP REMOVALS INVOLVE TRUNK DIAMETERS LESS THAN 6" AND SHALL BE INCLUDED IN THE COST OF EXCAVATION.
3. TBF SHALL BE INCLUDED IN THE COST OF "STORM SEWER REMOVAL," OF THE SIZE SPECIFIED.
4. SEE CONDUIT DETAIL FOR REMOVAL OF EXISTING PVC AND GALVANIZED STEEL CONDUITS, AND REMOVAL OF INTERCONNECT FIBER OPTIC CABLE, ON SHEET 30.
5. THE LIGHTING POLES, MAST ARMS, LUMINAIRES, AND ASSOCIATED HARDWARE SHALL REMAIN THE PROPERTY OF THE CITY OF NAPERVILLE. THE POLES AND MAST ARMS SHALL BE DELIVERED TO THE DEPARTMENT OF PUBLIC WORK, UNLOADED AND STACKED AS DIRECTED BY THE ENGINEER. THE LED LUMINAIRES SHALL REMAIN ON THE PROJECT SIDE AND BE INSTALLED ON THE NEW, PERMANENT LIGHTING ASSEMBLIES.

CMT
License No. 184-000613

USER NAME = Peter Ross	DESIGNED - JR	REVISED -
	DRAWN - MPM	REVISED -
PLOT SCALE = 20.0000 ' / in.	CHECKED - PR	REVISED -
PLOT DATE = 12/12/2015 11:12:15 AM	DATE - 12/7/2015	REVISED -

STATE OF ILLINOIS
DEPARTMENT OF TRANSPORTATION

REMOVAL PLAN
WASHINGTON STREET

SCALE: 1"=20' | SHEET 1 OF 1 SHEETS | STA. 94+35.14 TO STA. 106+43.52

F.A.U. RTE.	SECTION	COUNTY	TOTAL SHEETS	SHEET NO.
2552	14-00161-00-BR	WILL	86	14

CONTRACT NO. 61C38

ILLINOIS FED. AID PROJECT DPC-M-4003(356)

FILE NAME = L:\Naperville\15230-01_Washington Ph2\Draw\CADD_Sheets\sht-removal.dgn

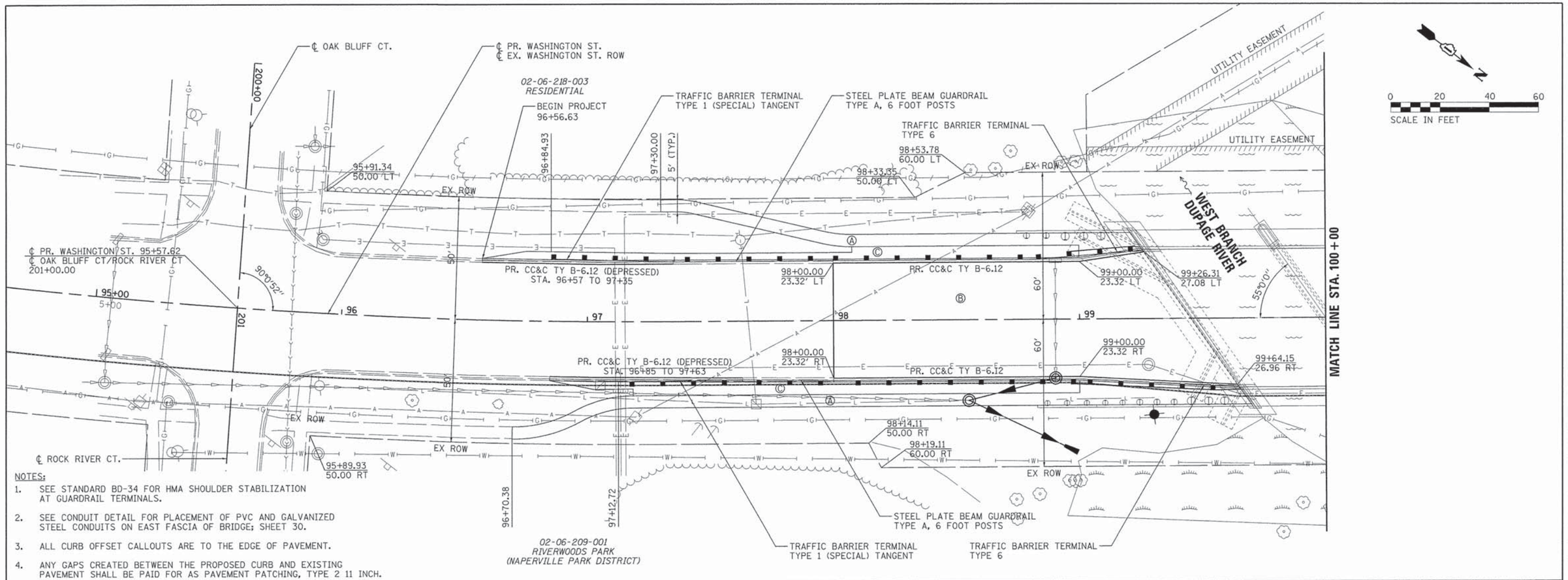

NOTES:

1. SEE STANDARD BD-34 FOR HMA SHOULDER STABILIZATION AT GUARDRAIL TERMINALS.
2. SEE CONDUIT DETAIL FOR PLACEMENT OF PVC AND GALVANIZED STEEL CONDUITS ON EAST FASCIA OF BRIDGE; SHEET 30.
3. ALL CURB OFFSET CALLOUTS ARE TO THE EDGE OF PAVEMENT.
4. ANY GAPS CREATED BETWEEN THE PROPOSED CURB AND EXISTING PAVEMENT SHALL BE PAID FOR AS PAVEMENT PATCHING, TYPE 2 11 INCH.

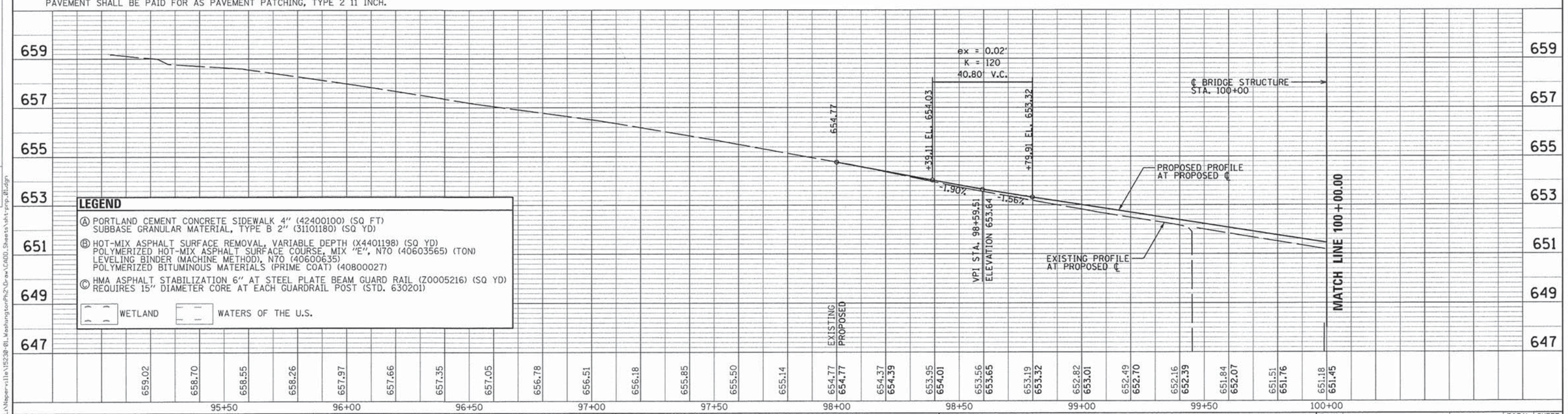

LEGEND

Ⓐ PORTLAND CEMENT CONCRETE SIDEWALK 4" (42400100) (SQ FT)
SUBBASE GRANULAR MATERIAL, TYPE B 2" (31101180) (SQ YD)

Ⓑ HOT-MIX ASPHALT SURFACE REMOVAL, VARIABLE DEPTH (X4401198) (SQ YD)
POLYMERIZED HOT-MIX ASPHALT SURFACE COURSE, MIX "E", N70 (40603565) (TON)
LEVELING BINDER (MACHINE METHOD), N70 (40600635)
POLYMERIZED BITUMINOUS MATERIALS (PRIME COAT) (40800027)

Ⓒ HMA ASPHALT STABILIZATION 6" AT STEEL PLATE BEAM GUARD RAIL (Z0005216) (SQ YD)
REQUIRES 15" DIAMETER CORE AT EACH GUARDRAIL POST (STD. 630201)

WETLAND — WATERS OF THE U.S.

PLAN	SURVEYED	BY	DATE
NOTE BOOK NO.	PLOTTED		
	ALTONMENT CHECKED		
	PT. OF WAY CHECKED		
	CADD FILE NAME		

PROFILE	SURVEYED	BY	DATE
NOTE BOOK NO.	PLOTTED		
	GRADES CHECKED		
	B.M. NOTED		
	STRUCTURE NOTAT'NS CHKD		

FILE NAME = L:\Naperville\15230-01_WashingtonPh2\Draw\CADD\Sheets\sht-prp_01.dgn

CMT
License No. 184-000613 © Copyright CMT Inc.

USER NAME = Peter Ross	DESIGNED - JR	REVISED -
	DRAWN - MPM	REVISED -
PLOT SCALE = 20.0000 ' / in.	CHECKED - PFR	REVISED -
PLOT DATE = 12/12/2015 11:12:18 AM	DATE - 12/7/2015	REVISED -

STATE OF ILLINOIS
DEPARTMENT OF TRANSPORTATION

PLAN AND PROFILE
WASHINGTON STREET

SCALE: 1"=20' | SHEET NO. 1 OF 3 SHEETS | STA. 94+35.14 TO STA. 100+00.00

F.A.U. RTE.	SECTION	COUNTY	TOTAL SHEETS	SHEET NO.
2552	14-00161-00-BR	WILL	86	15
		CONTRACT NO. 61C38		
FED. ROAD DIST. NO.	ILLINOIS	FED. AID PROJECT DPC-M-4003(356)		

NOTES:
1. SEE STANDARD BD-34 FOR HMA SHOULDER STABILIZATION AT GUARDRAIL TERMINALS.
2. SEE CONDUIT DETAIL FOR PLACEMENT OF PVC AND GALVANIZED STEEL CONDUITS ON EAST FASCIA OF BRIDGE; SHEET 30.
3. ALL CURB OFFSET CALLOUTS ARE TO THE EDGE OF PAVEMENT

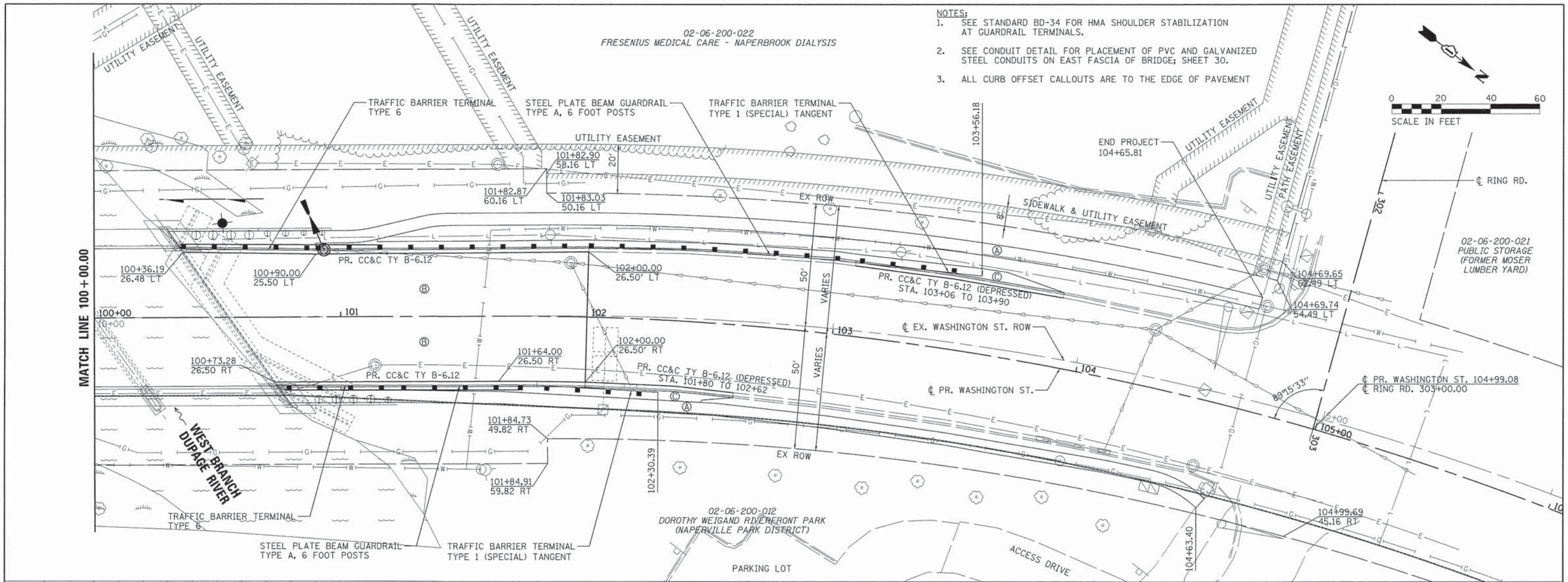

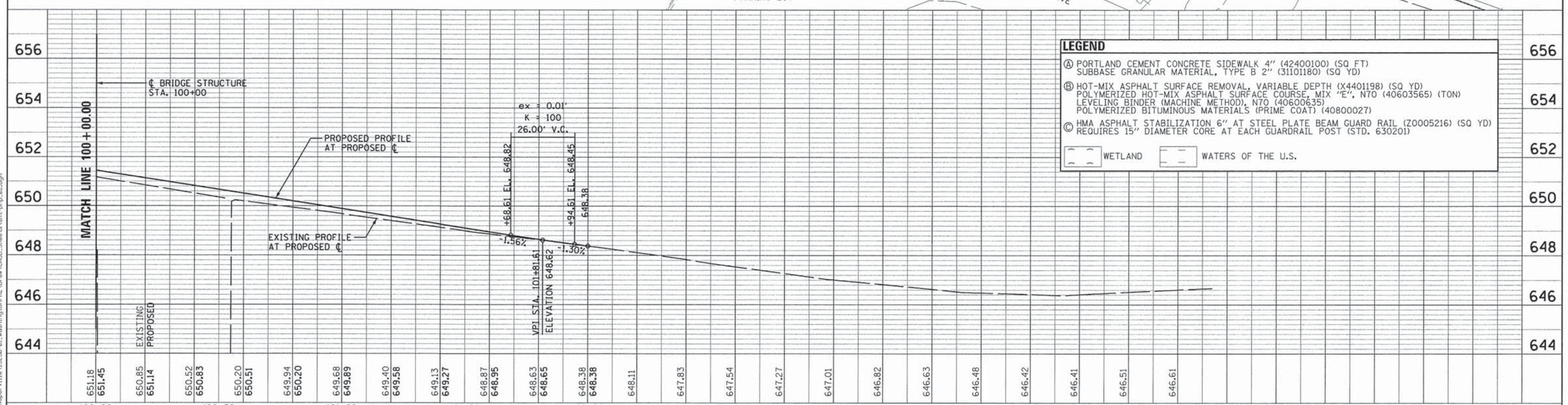

LEGEND

Ⓐ PORTLAND CEMENT CONCRETE SIDEWALK 4" (42400100) (SQ FT)
SUBBASE GRANULAR MATERIAL, TYPE B 2" (31101180) (SQ YD)

Ⓑ HOT-MIX ASPHALT SURFACE REMOVAL, VARIABLE DEPTH (X4401198) (SQ YD)
POLYMERIZED HOT-MIX ASPHALT SURFACE COURSE, MIX "E", N70 (40603565) (TON)
LEVELING BINDER (MACHINE METHOD), N70 (40600635)
POLYMERIZED BITUMINOUS MATERIALS (PRIME COAT) (40800027)

Ⓒ HMA ASPHALT STABILIZATION 6" AT STEEL PLATE BEAM GUARD RAIL (Z0005216) (SQ YD)
REQUIRES 15" DIAMETER CORE AT EACH GUARDRAIL POST (STD. 630201)

WETLAND — WATERS OF THE U.S.

PLAN	BY	DATE
SURVEYED		
PLOTTED		
ALIGNMENT CHECKED		
RT. OF WAY CHECKED		
CADD FILE NAME		
NOTE BOOK NO.		

PROFILE	BY	DATE
SURVEYED		
PLOTTED		
GRADES CHECKED		
RT. OF WAY CHECKED		
STRUCTURE NOTAT'NS CHKD		
NOTE BOOK NO.		

FILE NAME = L:\Naperville\15238-01_WashingtonPh2\Drawings\CADD_Sheets\sht-pnp-B2.dgn

CMT
License No. 184-000613 © Copyright 2007, Inc.

USER NAME = Peter Ross	DESIGNED - JR	REVISED -	
	DRAWN - MPM	REVISED -	
PLOT SCALE = 20.0000 ' / in.	CHECKED - PFR	REVISED -	
PLOT DATE = 12/12/2015 11:12:19 AM	DATE - 12/7/2015	REVISED -	

STATE OF ILLINOIS
DEPARTMENT OF TRANSPORTATION

PLAN AND PROFILE
WASHINGTON STREET

SCALE: 1"=20' | SHEET NO. 2 OF 3 SHEETS | STA. 100+00.00 TO STA. 106+43.52

F.A.U. RTE.	SECTION	COUNTY	TOTAL SHEETS	SHEET NO.
2552	14-00161-00-BR	WILL	86	16

CONTRACT NO. 61C38

FED. ROAD DIST. NO. | ILLINOIS | FED. AID PROJECT DPC-M-4003(356)

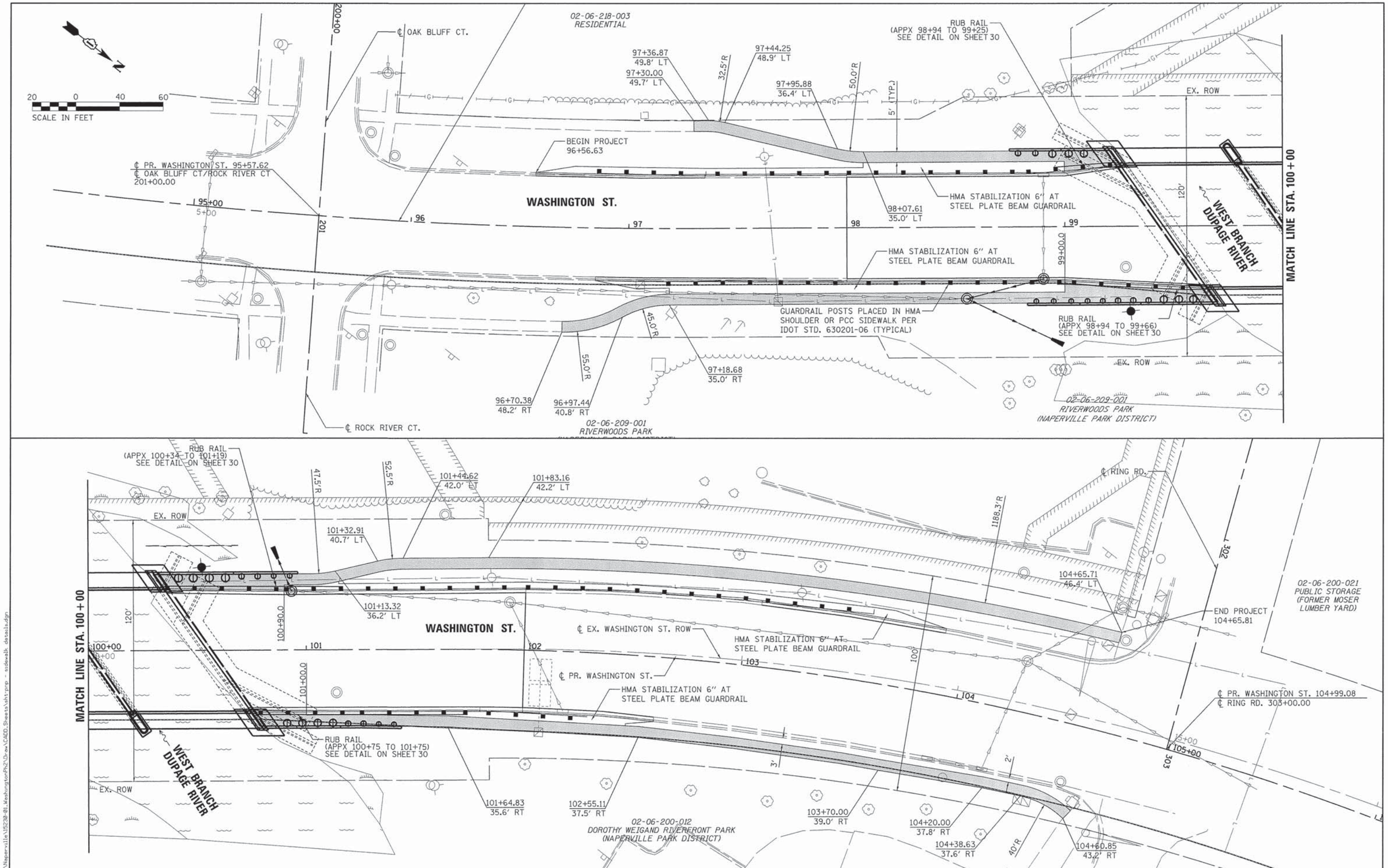

FILE NAME = L:\Naperville\15230-01.WashingtonPh2\Dwg\CADD.Sheets\sht.prp - sidewalk detail.dgn

CMT
License No. 184-000613 ©Copyright CMT, Inc.

USER NAME = Peter Ross	DESIGNED - JR	REVISED -	
	DRAWN - MPM	REVISED -	
PLOT SCALE = 20.0000 ' / in.	CHECKED - PR	REVISED -	
PLOT DATE = 12/12/2015 11:12:20 AM	DATE - 12/7/2015	REVISED -	

STATE OF ILLINOIS
DEPARTMENT OF TRANSPORTATION

PLAN AND PROFILE
SIDEWALK DETAILS
WASHINGTON STREET

SCALE: 1"=20' | SHEET 3 OF 3 SHEETS | STA. 94+35.14 TO STA. 106+43.52

F.A.U. RTE.	SECTION	COUNTY	TOTAL SHEETS	SHEET NO.
2552	14-00161-00-BR	WILL	86	17
		CONTRACT NO. 61C38		
		ILLINOIS FED. AID PROJECT DPC-M-4003(356)		

PRE-STAGE

1. INSTALL ARTERIAL ROAD INFORMATION SIGNS PER IDOT D1 STANDARD TC-22. SIGNS SHALL BE INSTALLED ONE WEEK PRIOR TO CONSTRUCTION.
2. INSTALL TEMPORARY LIGHTING FOR STAGE 1.
3. INSTALL COFFERDAMS AND INITIATE DEWATERING FOR BRIDGE SUBSTRUCTURE CONSTRUCTION.
4. COMPLETE TREE REMOVAL, CLEARING OF BRUSH/SHRUBS AND GRINDING OF EXISTING TREE STUMPS.

STAGE 1

1. INSTALL STAGE 1 TRAFFIC CONTROL. SHIFT TRAFFIC TO THE EAST SIDE OF WASHINGTON STREET.
2. COMPLETE WEST SIDE OF BRIDGE SUBSTRUCTURE AND SUPERSTRUCTURE WIDENING. COMPLETE PEDESTRIAN FACILITIES, STORM SEWER, GUARDRAIL, HMA SHOULDERS, CURB REPLACEMENT, LIGHT POLE RELOCATION, SOLDIER PILE WALL, GRADING, LANDSCAPING AND UTILITY STRUCTURE ADJUSTMENT.
3. INSTALL TEMPORARY HMA RAMP AT THE INTERFACE BETWEEN THE CONCRETE WEARING SURFACE ON THE BRIDGE AND THE EXISTING ROADWAY. ALSO INSTALL TEMPORARY HMA RAMP BETWEEN THE EXISTING ROADWAY AND THE RAISED PROFILE OF THE NEW CONCRETE CURB AND GUTTER. PLACE PADDING AROUND UTILITY FRAMES THAT ARE TO BE ADJUSTED.

STAGE 2

1. RELOCATE TEMPORARY LIGHT POLE, MAST ARM AND LUMINAIRE TO THE TEMPORARY LOCATION ON THE EAST SIDE OF WASHINGTON STREET.
2. INSTALL STAGE 2 TRAFFIC CONTROL. SHIFT TRAFFIC TO THE WEST SIDE OF WASHINGTON STREET.
3. INSTALL TEMPORARY TRAFFIC SIGNAL INTERCONNECT.
4. COMPLETE EAST SIDE OF BRIDGE SUBSTRUCTURE AND SUPERSTRUCTURE WIDENING. COMPLETE PEDESTRIAN FACILITIES, STORM SEWER, GUARDRAIL, HMA SHOULDERS, CURB REPLACEMENT, LIGHT POLE RELOCATION, SOLDIER PILE WALL, GRADING, LANDSCAPING AND UTILITY STRUCTURE ADJUSTMENT.
5. INSTALL TEMPORARY HMA RAMP AT THE INTERFACE BETWEEN THE CONCRETE WEARING SURFACE ON THE BRIDGE AND THE EXISTING ROADWAY. ALSO INSTALL TEMPORARY HMA RAMP BETWEEN THE EXISTING ROADWAY AND THE RAISED PROFILE OF THE NEW CONCRETE CURB AND GUTTER. PLACE PADDING AROUND UTILITY FRAMES THAT ARE TO BE ADJUSTED.
6. REMOVE COFFERDAMS AND DEWATERING.

POST STAGE 2

1. REMOVE STAGE 2 TRAFFIC CONTROL. TRAFFIC WILL RETURN TO ITS ORIGINAL CONFIGURATION.
2. RECONNECT EXISTING TRAFFIC SIGNAL INTERCONNECT, ROUTED THROUGH RECONSTRUCTED CONDUIT ATTACHED TO THE UNDERSIDE OF THE BRIDGE, AS DESCRIBED ON SHEET 30.
3. FOR MILLING OF EXISTING HMA PAVEMENT, AND PLACEMENT OF HMA LEVELING BINDER AND HMA SURFACE COURSE, UTILIZE STANDARD 701606-10.
4. INSTALL FINAL STRIPING.
5. COMPLETE ANY ADDITIONAL LANDSCAPING, I.E. PLANTINGS, TREES.

SUGGESTED MAINTENANCE OF TRAFFIC - GENERAL NOTES

1. THE SUGGESTED STAGES OF CONSTRUCTION AND SEQUENCE OF OPERATIONS SHOWN IN THESE PLANS DOES NOT, NOR IS IT INTENDED TO, DEPICT ALL THE WORK THAT WILL BE REQUIRED BY THE CONTRACTOR FOR STAGING OPERATIONS DURING THE CONTRACT. THE SEQUENCE OF OPERATIONS IS GIVEN AS AN AIDE AND GUIDE FOR THE CONTRACTOR'S USE TO ESTABLISH THE NECESSARY GUIDELINES FOR EFFICIENT TRAFFIC OPERATION DURING THE DURATION OF THE CONTRACT.
2. THE CONTRACTOR MAY WISH TO MAKE REVISIONS OR MODIFICATIONS TO THE SEQUENCE OF CONSTRUCTION OR THE SUGGESTED STAGES OF CONSTRUCTION PLANS. ALL CHANGES MUST BE SUBMITTED IN WRITING TO THE ENGINEER FOR APPROVAL. ANY ADDITIONAL TRAFFIC CONTROL REQUIRED TO SATISFY THE STANDARDS FOR TRAFFIC CONTROL RESULTING FROM THE MODIFICATIONS REQUESTED BY THE CONTRACTOR SHALL BE PROVIDED AT THE CONTRACTOR'S EXPENSE.
3. THE CONTRACTOR SHALL BE RESPONSIBLE FOR ESTABLISHING AND MAINTAINING CONSTRUCTION TRAFFIC ACCESS POINTS. THE PROPOSED LOCATIONS SHALL BE SUBMITTED TO THE ENGINEER FOR APPROVAL. FOR OFF PAVEMENT ACCESS, A QUANTITY FOR STABILIZED CONSTRUCTION ENTRANCE (Z0013797) HAS BEEN PROVIDED.
4. THE CONTRACTOR SHALL FURNISH, PLACE, AND MAINTAIN TWO CHANGEABLE MESSAGE SIGNS. EXACT LOCATIONS SHALL BE DETERMINED BY THE ENGINEER. MESSAGE BOARDS SHALL BE ACTIVATED TWO WEEKS PRIOR TO THE DATE CONSTRUCTION BEGINS NOTING THE START DATE AND THE SIGN MESSAGES SHALL BE MODIFIED THROUGHOUT THE PROJECT TO ALERT THE TRAVELING PUBLIC WHEN SIGNIFICANT CHANGES OCCUR (LANE CLOSURES, NEW LANE CONFIGURATION, ETC.).
5. A MINIMUM OF ONE THROUGH LANE IN EACH DIRECTION SHALL REMAIN OPEN ON WASHINGTON STREET AT ALL TIMES, EXCEPT FOR PERIODS OF SHORT DURATION DURING MILLING AND RESURFACING OPERATIONS OR AS DIRECTED BY THE ENGINEER. TEMPORARY TRAFFIC LANES SHALL BE A MINIMUM OF 10' WIDE.
6. MILLING OF EXISTING PAVEMENT AND PLACEMENT OF HMA LEVEL BINDER AND SURFACE COURSE SHALL BE COMPLETED UNDER TRAFFIC BETWEEN THE HOURS OF 9:00 AM AND 3:00 PM OR AS DIRECTED BY THE ENGINEER. TEMPORARY RAMPS SHALL BE PROVIDED IN ACCORDANCE WITH SECTION 406 OF THE STANDARD SPECIFICATIONS OR AS DIRECTED BY THE ENGINEER.
7. EXISTING OR PROPOSED TRAFFIC SIGNS CONFLICTING WITH THE TEMPORARY TRAFFIC CONTROL SHALL BE TEMPORARILY REMOVED OR COVERED AS DIRECTED BY THE ENGINEER. THIS WORK WILL NOT BE PAID FOR SEPARATELY, BUT SHALL BE INCLUDED IN THE TRAFFIC CONTROL AND PROTECTION (SPECIAL).
8. UNLESS OTHERWISE SPECIFIED, THE COST TO FURNISH, INSTALL, MAINTAIN, AND REMOVED TRAFFIC CONTROL DEVICES SHOWN IN THESE PLANS AND STANDARDS SHALL BE CONSIDERED AS INCLUDED IN THE COST OF TRAFFIC CONTROL AND PROTECTION (SPECIAL). TEMPORARY PAVEMENT MARKINGS, MASKING OF EXISTING MARKINGS, MASKING REMOVAL, ARTERIAL ROAD SIGNING (TC-22), AND CHANGEABLE MESSAGE BOARDS WILL BE PAID FOR SEPARATELY.
9. TEMPORARY LIGHTING SHALL BE PROVIDED AS SHOWN ON THE PLANS. THE CITY WILL PROVIDE A TEMPORARY LED LUMINAIRE TO USE DURING CONSTRUCTION. COST OF INSTALLING THE TEMPORARY LUMINAIRE SHALL BE INCLUDED IN THE COST OF LIGHT POLE, WOOD, 70 FOOT, CLASS 3, WITH 15FT MAST ARM.
10. NO WORK SHALL COMMENCE UNTIL TRAFFIC CONTROL REQUIREMENTS ARE MET.
11. ACCESS TO ALL ADJACENT STREETS, PARKS, RESIDENCES AND BUSINESSES SHALL BE MAINTAINED AT ALL TIMES THROUGHOUT THE DURATION OF CONSTRUCTION.

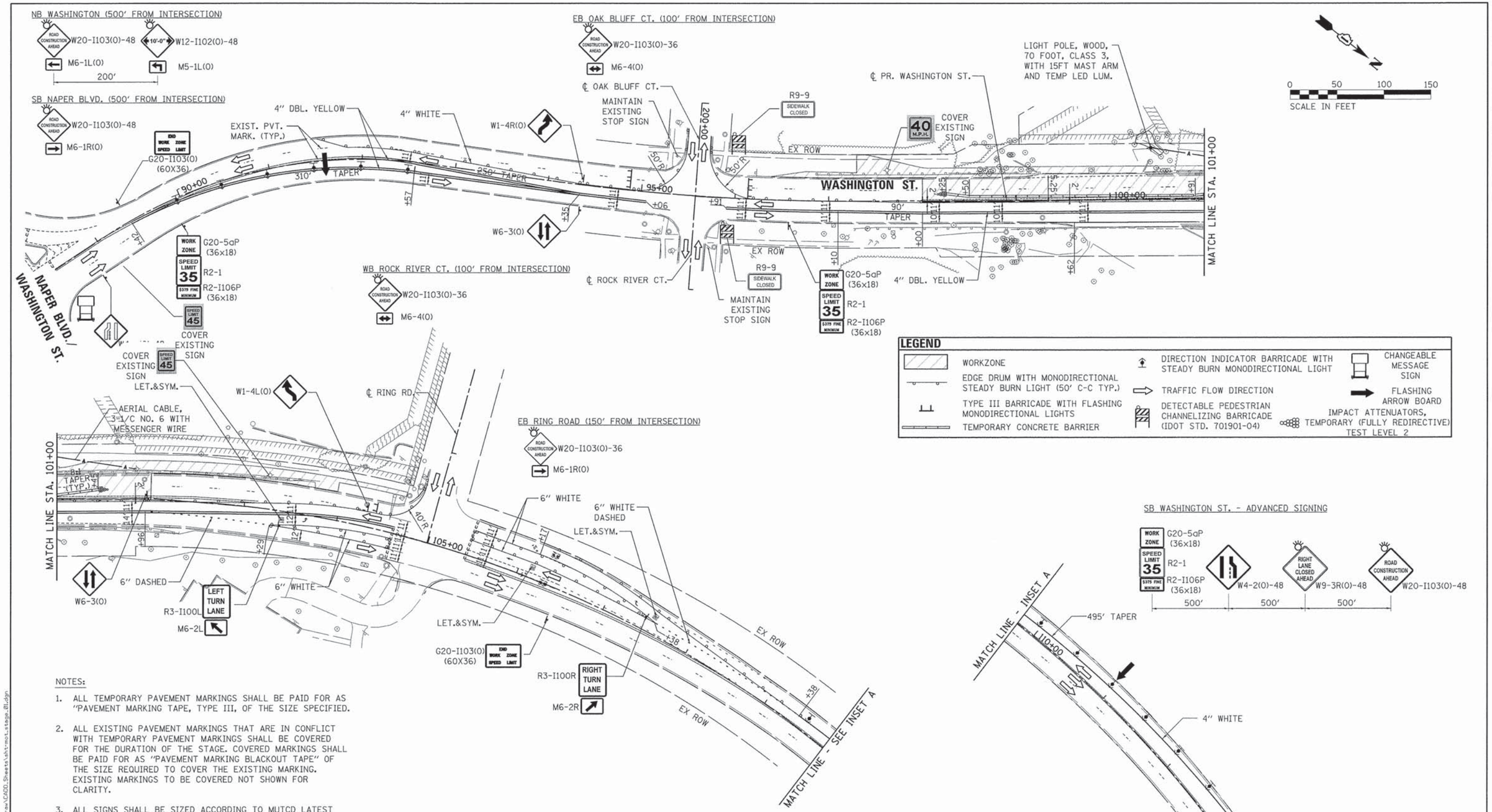

LEGEND

- WORKZONE
- EDGE DRUM WITH MONODIRECTIONAL STEADY BURN LIGHT (50' C-C TYP.)
- TYPE III BARRICADE WITH FLASHING MONODIRECTIONAL LIGHTS
- TEMPORARY CONCRETE BARRIER
- DIRECTION INDICATOR BARRICADE WITH STEADY BURN MONODIRECTIONAL LIGHT
- TRAFFIC FLOW DIRECTION
- DETECTABLE PEDESTRIAN CHANNELIZING BARRICADE (IDOT STD. 701901-04)
- CHANGEABLE MESSAGE SIGN
- FLASHING ARROW BOARD
- IMPACT ATTENUATORS, TEMPORARY (FULLY REDIRECTIVE) TEST LEVEL 2

NOTES:

1. ALL TEMPORARY PAVEMENT MARKINGS SHALL BE PAID FOR AS "PAVEMENT MARKING TAPE, TYPE III, OF THE SIZE SPECIFIED.
2. ALL EXISTING PAVEMENT MARKINGS THAT ARE IN CONFLICT WITH TEMPORARY PAVEMENT MARKINGS SHALL BE COVERED FOR THE DURATION OF THE STAGE. COVERED MARKINGS SHALL BE PAID FOR AS "PAVEMENT MARKING BLACKOUT TAPE" OF THE SIZE REQUIRED TO COVER THE EXISTING MARKING. EXISTING MARKINGS TO BE COVERED NOT SHOWN FOR CLARITY.
3. ALL SIGNS SHALL BE SIZED ACCORDING TO MUTCD LATEST EDITION FOR CONVENTIONAL ROADS.
4. THE EXACT LOCATION OF THE TEMPORARY LIGHTING SHALL BE DETERMINED BY THE CONTRACTOR AND APPROVED BY THE ENGINEER. SEE SPECIAL PROVISIONS.
5. THE TEMPORARY BARRIER WALL SHALL BE IN PLACE PRIOR TO REMOVAL OF THE EXISTING BRIDGE RAIL AND UNTIL AFTER THE CONSTRUCTION OF THE PROPOSED BRIDGE PARAPET.

FILE NAME = L:\Naperville\15238-01 Washington Ph2\Draw\CADD_Sheets\sht-mot_stage_01.dgn

CMT
License No. 184-000613 ©Copyright CMT, Inc.

USER NAME = Peter Ross	DESIGNED - JR	REVISED -	
	DRAWN - JR	REVISED -	
PLOT SCALE = 50.0000 ' / in.	CHECKED - PR	REVISED -	
PLOT DATE = 12/12/2015 11:12:22 AM	DATE - 12/7/2015	REVISED -	

STATE OF ILLINOIS
DEPARTMENT OF TRANSPORTATION

SUGGESTED STAGES OF CONSTRUCTION & TRAFFIC CONTROL
STAGE 1

SCALE: 1"=50' | SHEET 2 OF 3 SHEETS | STA. Station From TO STA. Station To

F.A.U. RTE.	SECTION	COUNTY	TOTAL SHEETS	SHEET NO.
2552	14-00161-00-BR	WILL	86	19
		CONTRACT NO. 61C38		
		ILLINOIS FED. AID PROJECT DPC-M-4003(356)		

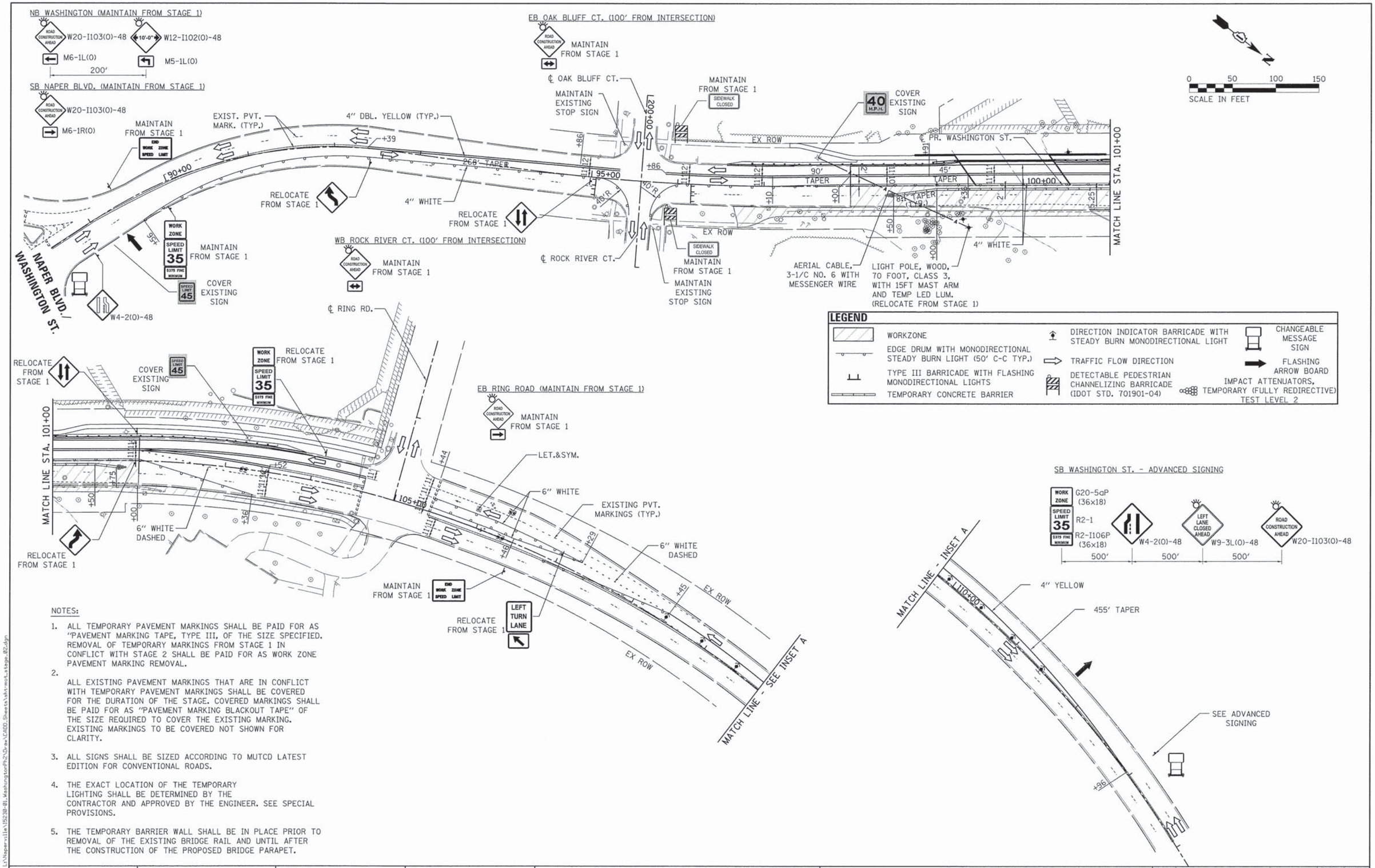

NOTES:

1. ALL TEMPORARY PAVEMENT MARKINGS SHALL BE PAID FOR AS "PAVEMENT MARKING TAPE, TYPE III, OF THE SIZE SPECIFIED. REMOVAL OF TEMPORARY MARKINGS FROM STAGE 1 IN CONFLICT WITH STAGE 2 SHALL BE PAID FOR AS WORK ZONE PAVEMENT MARKING REMOVAL.
2. ALL EXISTING PAVEMENT MARKINGS THAT ARE IN CONFLICT WITH TEMPORARY PAVEMENT MARKINGS SHALL BE COVERED FOR THE DURATION OF THE STAGE. COVERED MARKINGS SHALL BE PAID FOR AS "PAVEMENT MARKING BLACKOUT TAPE" OF THE SIZE REQUIRED TO COVER THE EXISTING MARKING. EXISTING MARKINGS TO BE COVERED NOT SHOWN FOR CLARITY.
3. ALL SIGNS SHALL BE SIZED ACCORDING TO MUTCD LATEST EDITION FOR CONVENTIONAL ROADS.
4. THE EXACT LOCATION OF THE TEMPORARY LIGHTING SHALL BE DETERMINED BY THE CONTRACTOR AND APPROVED BY THE ENGINEER. SEE SPECIAL PROVISIONS.
5. THE TEMPORARY BARRIER WALL SHALL BE IN PLACE PRIOR TO REMOVAL OF THE EXISTING BRIDGE RAIL AND UNTIL AFTER THE CONSTRUCTION OF THE PROPOSED BRIDGE PARAPET.

FILE NAME = L:\Naperville\15238-01_WashingtonPh2\Draw\CADD_Sheets\sht-mot_stage_02.dgn

CMT
License No. 184-000613 © Copyright CMT, Inc.

USER NAME = Peter Ross	DESIGNED - JR	REVISED -	
	DRAWN - JR	REVISED -	
PLOT SCALE = 50.0000 ' / in.	CHECKED - PR	REVISED -	
PLOT DATE = 12/12/2015 11:12:24 AM	DATE - 12/7/2015	REVISED -	

STATE OF ILLINOIS
DEPARTMENT OF TRANSPORTATION

SUGGESTED STAGES OF CONSTRUCTION & TRAFFIC CONTROL
STAGE 2

SCALE: 1"=50' | SHEET 3 OF 3 SHEETS | STA. Station From TO STA. Station To

F.A.U. RTE.	SECTION	COUNTY	TOTAL SHEETS	SHEET NO.
2552	14-00161-00-BR	WILL	86	20
		CONTRACT NO. 61C38		
		ILLINOIS FED. AID PROJECT DPC-M-4003(356)		

EROSION CONTROL GENERAL NOTES

1. THE CONTRACTOR SHALL BE REQUIRED TO IMPLEMENT AND MAINTAIN EROSION CONTROL MEASURES PRIOR TO THE START OF ANY LAND DISTURBANCE ACTIVITIES.

2. STOCKPILES OF SOIL AND OTHER BUILDING MATERIALS TO REMAIN IN PLACE MORE THAN THREE (3) DAYS SHALL BE FURNISHED WITH EROSION AND SEDIMENT CONTROL MEASURES (I.E. PERIMETER SILT FENCE). STOCKPILES TO REMAIN IN PLACE FOR FOURTEEN (14) DAYS OR MORE SHALL RECEIVE TEMPORARY SEEDING.

3. THE CONTRACTOR SHALL TAKE ALL PRECAUTIONS TO PREVENT POLLUTION OF STORM WATER AND SHALL FOLLOW IEPA & IDOT CONSTRUCTION MEMORANDUM NO. 06-60.

4. STABILIZATION OF DISTURBED AREAS MUST, AT A MINUMUM, BE INITIATED IMMEDIATELY WHENEVER ANY CLEARING, GRADING, EXCAVATING OR OTHER EARTH DISTURBING ACTIVITIES HAVE PERMANENTLY CEASED ON ANY PORTION OF THE SITE, OR TEMPORARILY CEASED ON ANY PORTION OF THE SITE AND WILL NOT RESUME FOR A PERIOD EXCEEDING 14 CALENDAR DAYS. STABILIZATION OF DISTURBED AREAS MUST BE INITIATED WITHIN (1) WORKING DAY OF PERMANENT OR TEMPORARY CESSATION OF EARTH DISTURBING ACTIVITIES AND SHALL BE COMPLETED AS SOON AS POSSIBLE BUT NOT LATER THAN (14) DAYS FROM THE INITIATION OF STABILIZATION WORK IN THE AREA.

5. THE CONTRACTOR SHALL MAINTAIN A DESIGNATED CONCRETE WASHOUT AREA FOR THE DURATION OF ALL CONCRETE POURS. THE CONSTRUCTION OF THE WASHOUT FACILITY SHALL MEET THE APPROVAL OF THE ENGINEER. THE COST FOR BUILDING, MAINTAINING, AND ULTIMATE REMOVAL OF ANY CONCRETE WASHOUT FACILITY SHALL BE CONSIDERED INCLUDED IN THE COST OF THE ASSOCIATED CONCRETE WORK.

6. THE CONTRACTOR IS NOT PERMITTED TO ALLOW THE EXISTING STRUCTURE, OR OTHER CONSTRUCTION DEBRIS TO FALL INTO THE RIVER DURING DEMOLITION OR CONSTRUCTION.

7. SOIL AND MATERIAL STOCKPILES MAY NOT BE LOCATED WITHIN THE FLOODPLAIN.

8. ALL ADJACENT STREETS SHALL BE MONITORED AND KEPT FREE OF DIRT AND DEBRIS. THE CONTRACTOR SHALL CLEAN THE ADJACENT PAVEMENT OF ALL DIRT AND DEBRIS AT THE END OF EACH DAY'S OPERATIONS AND WHEN DIRECTED BY THE ENGINEER (ART. 107.15).

9. IT IS THE RESPONSIBILITY OF THE GENERAL CONTRACTOR TO INFORM ANY SUBCONTRACTOR(S) WHO MAY PERFORM WORK ON THIS PROJECT OF THE REQUIREMENTS IN IMPLEMENTING AND MAINTAINING THESE EROSION CONTROL PLANS AND THE NATIONAL POLLUTANT DISCHARGE ELIMINATION SYSTEM PERMIT REQUIREMENTS SET FORTH BY THE ILLINOIS IPA.

INSPECTIONS:

1. ALL EROSION AND SEDIMENT CONTROL MEASURES SHALL BE INSPECTED BY A QUALIFIED PERSON. A QUALIFIED PERSON SHALL BE DEFINED AS A PERSON KNOWLEDGEABLE IN THE PRINCIPLES AND PRACTICES OF EROSION AND SEDIMENT CONTROL MEASURES, SUCH AS A LICENSED PROFESSIONAL ENGINEER (P.E.), A CERTIFIED PROFESSIONAL IN EROSION AND SEDIMENT CONTROL (CPESC), A CERTIFIED EROSION AND STORM WATER INSPECTOR (CESSWI), OR OTHER KNOWLEDGEABLE PERSON.

2. ALL MEASURES SHALL BE INSPECTED A MINUMUM OF ONCE EVERY SEVEN (7) CALENDAR DAYS AND WITHIN TWENTY-FOUR (24) HOURS OF A PRECIPITATION EVENT OF 1/2-INCH OR GREATER, OR BY THE END OF THE FOLLOWING BUSINESS OR WORK DAY.

3. THE CONTRACTOR SHALL PERMIT SITE ACCESS TO REPRESENTATIVES OF THE ENGINEER, OWNER, SOIL AND WATER CONSERVATION DISTRICT, ENVIRONMENTAL PROTECTION AGENCY, AND U.S. ARMY CORPS OF ENGINEERS.

TEMPORARY DITCH CHECKS:

1. TEMPORARY DITCH CHECKS WILL BE REQUIRED IN LOCATIONS WHERE EITHER TEMPORARY OR PERMANENT DITCHES HAVE BEEN DISTURBED OR CREATED. TEMPORARY DITCH CHECKS HAVE BEEN INCLUDED IN THE EROSION AND SEDIMENT CONTROL PLANS, BUT THEIR EXACT LOCATION AND SPACING MAY BE FIELD ADJUSTED TO MEET PROJECT NEEDS. PLACEMENT SHALL BE COORDINATED WITH THE ENGINEER. DITCH CHECKS SHALL BE CONSTRUCTED IN ACCORDANCE WITH SECTION 280 OF THE STANDARD SPECIFICATIONS FOR ROAD AND BRIDGE CONSTRUCTION, LATEST EDITION, AND SHALL BE EITHER TRIANGULAR SILT DIKE TYPE, OR AGGREGATE TYPE.

STABILIZED CONSTRUCTION ENTRANCE:

1. A STABILIZED CONSTRUCTION ENTRANCE IS NOT ANTICIPATED FOR THIS PROJECT. HOWEVER, IF DURING CONSTRUCTION, THE ENGINEER OR THE WILL/SOUTH COOK SOIL AND WATER CONSERVATION DISTRICT DETERMINE THAT A STABILIZED CONSTRUCTION ENTRANCE IS NEEDED, THE CONTRACTOR SHALL SUBMIT THE LOCATION AND CONSTRUCTION OF THE STABILIZED CONSTRUCTION ENTRANCE TO THE ENGINEER AND WILL/SOUTH COOK SOIL AND WATER CONSERVATION DISTRICT FOR APPROVAL. A QUANTITY FOR STABILIZED CONSTRUCTION ACCESS HAS BEEN INCLUDED IN THE CONTRACT.

DEWATERING / IN STREAM WORK:

1. WORK IN THE WATERWAY SHOULD BE TIMED TO TAKE PLACE DURING LOW FLOW CONDITIONS. LOW FLOW CONDITIONS ARE FLOW AT OR BELOW THE NORMAL WATER ELEVATION.

2. COFFERDAM CONSTRUCTION SHALL BE OF A NON-ERODIBLE MATERIAL, SUCH AS STEEL SHEETS, PORTADAM TYPE, OR BLADDER TYPE. EARTHEN COFFERDAMS ARE NOT ACCEPTABLE.

3. THE COST OF DEWATERING SHALL BE INCLUDED IN THE COST OF "COFFERDAM (TYPE SPECIFIED) (LOCATION SPECIFIED)" AS SHOWN IN THE COFFERDAM PLAN. IF A TYPICAL COFFERDAM METHOD IS NOT UTILIZED, DEWATERING SHALL BE INCLUDED IN THE COST OF THE ASSOCIATED WORK REQUIRING DEWATERING.

4. OTHER THAN TO INSTALL AND REMOVE THE COFFERDAMS, NO WORK SHALL BE PERFORMED IN FLOWING WATER. WORK IN AND NEAR THE WEST BRANCH OF THE DUPAGE RIVER SHALL BE ISOLATED FROM RIVER FLOWS AND DEWATERED PRIOR TO THE COMMENCMENT OF WORK. THE DIVERSION/ISOLATION OF THE RIVER FLOWS MUST BE CONSTRUCTED FROM NON-ERODIBLE MATERIALS.

5. THE WILL / SOUTH COOK SWCD AND THE ARMY CORPS OF ENGINEERS MUST BE IN AGREEMENT WITH THE METHOD OF DIVERSION/ISOLATION PRIOR TO THE COMMENCMENT OF CONSTRUCTION. ONCE WORK IN THIS AREA BEGINS, PRIORITY SHALL BE GIVEN TO THE COMPLETION OF WORK AND FINAL STABILIZATION OF ALL DISTURBED AREAS.

6. IF BYPASS PUMPING IS NECESSARY, THE OUTLET SHALL BE PLACED ON A NON-ERODIBLE, ENERGY DISSIPATING SURFACE PRIOR TO REJOINING THE RIVER FLOW. THE INTAKE SHALL BE PLACED ON A STABLE SURFACE OR FLOATED TO PREVENT SEDIMENT INTAKE. FILTERING OF BYPASSED WATER IS NOT ANTICIPATED, UNLESS DISCHARGE WATER BECOMES SEDIMENT LADEN DUE TO CONSTRUCTION ACTIVITIES.

7. WHEN DEWATERING THE CONSTRUCTION AREA, ALL WATER MUST BE FILTERED PRIOR TO REJOINING THE RIVER FLOW. DEWATERING METHODS SHALL BE CHOSEN BASED ON SITE CONDITIONS, CONSTRAINTS AND SEDIMENT LOADS. AT A MINUMUM, FILTRATION SHOULD INCLUDE A SILT BAG WITH DISCHARGE ROUTED THROUGH A TEMPORARY AGGREGATE ROCK CHECK. THE EXACT METHOD OF FILTRATION IMPLEMENTED BY THE CONTRACTOR SHALL BE SUBMITTED TO THE ENGINEER AND WILL/SOUTH COOK SOIL AND WATER CONSERVATION DISTRICT FOR APPROVAL. DEWATERING INTO STORM SEWER STRUCTURES, DIRECTLY INTO THE DUPAGE RIVE, INTO FIELD TILES, OR DIRECTLY ONTO THE EXISTING GROUND IS STRICTLY PROHIBITED. THE COST OF DEWATERING AND FILTERING OF DEWATERING SHALL NOT BE MEASURED SEPARETELY FOR PAYMENT, BUT SHALL BE CONSIDERED INCLUDED IN THE COST OF THE ASSOCIATED WORK REQUIRING DEWATERING.

8. NO EQUIPMENT IS ALLOWED TO OPERATE IN THE WATER OR ON THE STREAM BED. IF EQUIPMENT IS NEEDED TO OPERATE IN THE WATER OR ON THE STREAM BED TO CONSTRUCT A DIVERSION/ISOLATION OR PERMANENT IMPROVEMENT, A TEMPORARY IN-STREAM WORK PAD (CAUSEWAY) MAY BE USED, AND SHALL CONFORM TO CHECK SHEET #8 OF THE RECURRING SPECIAL PROVISIONS AND REQUIREMENTS OF THE ACOE AND IDNR. IF THE CONTRACTOR DETERMINES A TEMPORARY IN-STREAM WORK PAD IS NEEDED, THE CONTRACTOR SHALL PROVIDE A PLAN AND DETAILS OF THE WORK PAD TO THE ACOE AND IDNR FOR APPROVAL PRIOR TO CONSTRUCTION. PAYMENT FOR THIS WORK SHALL BE ACCORDING TO CHECK SHEET #8 OF THE RECURRING SPECIAL PROVISIONS.

9. IN-STREAM WORK PADS, IF UTILIZED, SHALL BE INSPECTED AT THE END OF EACH WORK DAY, AND ALL DEBRIS, STOCKPILES AND FUEL CANS REMOVED.

CONTRACTOR SUBMITTAL - IN STREAM WORK:

10. THE ULTIMATE MEANS AND METHODS TO CONSTRUCT THE SUBSTRUCTURE WIDENING AND OTHER RELATED IN-STREAM WORK ARE THE CONTRACTOR'S RESPONSIBILITY. THESE NOTES, AND THE SUBSEQUENT SUGGESTED COFFERDAM PLAN ARE FOR GUIDANCE, AND DO NOT ASSUME THAT THE PARTICULAR METHOD SHOWN IS THE MOST COST EFFECTIVE AND EFFICIENT METHOD. THE CONTRACTOR IS ULTIMATELY RESPONSIBLE TO SUBMIT TO THE WILL/SOUTH COOK SOIL AND WATER CONSERVATION DISTRICT THEIR METHOD OF CONSTRUCTION, SHOWING SEQUENCING OF WORK, ISOLATION OF WORK AREA, DEWATERING, DISCHARGE AND FILTRATION OF DEWATERING, INSTALLATION AND REMOVAL OF ANY COFFERDAMS OR IN STREAM WORK PADS, AND RESTORATION OF THE WORK AREA.

MAINTENANCE:

1. ALL TEMPORARY AND PERMANENT EROSION AND SEDIMENT CONTROL MEASURES SHALL BE MAINTAINED IN AN EFFECTIVE WORKING CONDITION AS DETERMINED BY THE ENGINEER INCLUDING, BUT NOT LIMITED TO THE FOLLOWING:

   A.) PERIMETER EROSION BARRIER (SILT FENCE) - MAINTAIN AND REPAIR TEARS, GAPS, UNDERMINING. REPLACE BROKEN OR MISPLACED STAKES. SEDIMENT ACCUMULATION SHALL BE REMOVED WHEN IT HAS REACHED ⅓ THE HEGIHT OF THE BARRIER.

   B.) DITCH CHECKS - SEDIMENT ACCUMULATION SHALL BE REMOVED WHEN IT HAS REACHED 50% OF THE HEIGHT OF THE STRUCTURE OR AS RECOMMENDED BY THE MANUFACTURER, WHICHEVER IS MORE STRINGENT.

   C.) EROSION CONTROL BLANKET - MAINTAIN AND REPAIR DAMAGE DUE TO WATER EROSION, SOIL DISPLACEMENT, OR IMPROPER INSTALLATION.

   D.) CONCRETE WASHOUT - ALL CONTAINED MATERIALS SHALL BE REMOVED AND DISPOSED OF AT A LEGAL OFF-SITE LOCATION WHEN THE FACILITY HAS REACHED 50% CAPACITY.

2. MAINTENANCE OF EROSION AND SEDIMENT CONTROL MEASURES SHALL NOT BE PAID FOR SEPARATELY, BUT SHALL BE CONSIDERED INCLUDED IN THE CONTRACT UNIT PRICE FOR THE VARIOUS ITEMS AS BID.

WILL /SOUTH COOK SOIL AND WATER CONSERVATION DISTRICT GENERAL NOTES

1. THE WILL/SOUTH COOK SOIL AND WATER CONSERVATION DISTRICT IS RESPONSIBLE FOR CONDUCTING SITE VISITS AND VERIFYING THAT THE PRACTICES IMPLEMENTED ARE WORKING PROPERLY AND DETERMINE IF ADDITIONAL PRACTICES ARE NEEDED FOR BETTER SOIL EROSION AND SEDIMENT CONTROL. IF ADDITIONAL PRACTICES ARE DEEMED NECESSARY BY THE SWCD THE CONTRACTOR SHALL IMPLEMENT THE PRACTICES IN A TIMELY MANNER.

2. THE WILL/SOUTH COOK SOIL AND WATER CONSERVATION DISTRICT MUST BE NOTIFIED ONE WEEK PRIOR TO THE PRE-CONSTRUCTION CONFERENCE, ONE WEEK PRIOR TO THE COMMENCEMENT OF LAND DISTURBING ACTIVITIES, AND ONE WEEK PRIOR TO FINAL INSPECTION. (815) 462-3106 EXT. 3

3. PRIOR TO COMMENCING LAND-DISTURBING ACTIVITIES IN AREAS OTHER THAN INDICATED ON THE PLANS (INCLUDING BUT NOT LIMITED TO OFF-SITE BORROW OR WASTE AREAS) A SUPPLEMENTARY EROSION CONTROL PLAN SHALL BE SUBMITTED TO THE OWNER FOR REVIEW BY THE WILL/SOUTH COOK SOIL AND WATER CONSERVATION DISTRICT.

4. UNLESS OTHERWISE INDICATED, ALL VEGETATIVE AND STRUCTURAL EROSION AND SEDIMENT CONTROL PRACTICES SHALL BE CONSTRUCTED ACCORDING TO MINIMUM STANDARDS AND SPECIFICATIONS IN THE ILLINOIS URBAN MANUAL, LATEST EDITION.

5. A STAMPED AND SIGNED COPY OF THE APPROVED SOIL EROSION AND SEDIMENT CONTROL PLAN SHALL BE MAINTAINED ON THE SITE AT ALL TIMES AND BE PRESENTED WHEN REQUESTED BY THE WILL/SOUTH COOK SWCD, U.S. ARMY CORPS OF ENGINEERS OR ANY OTHER AUTHORIZED AGENCY.

CONTACT INFORMATION

ARMY CORPS:

MR. RON ABRANT
SENIOR PROJECT MANAGER
WEST PERMITS & ENFORCEMENT SECTION
U.S. ARMY CORPS OF ENGINEERS-
CHICAGO DISTRICT
231 S. LASALLE STREET, SUITE 1500
CHICAGO, ILLINOIS 60604
(312) 846-5536

WILL/SOUTH COOK SWCD:

1201 SOUTH GOUGAR RD.
NEW LENOX, ILLINOIS 60451
(815) 462-3106 EXT. 3

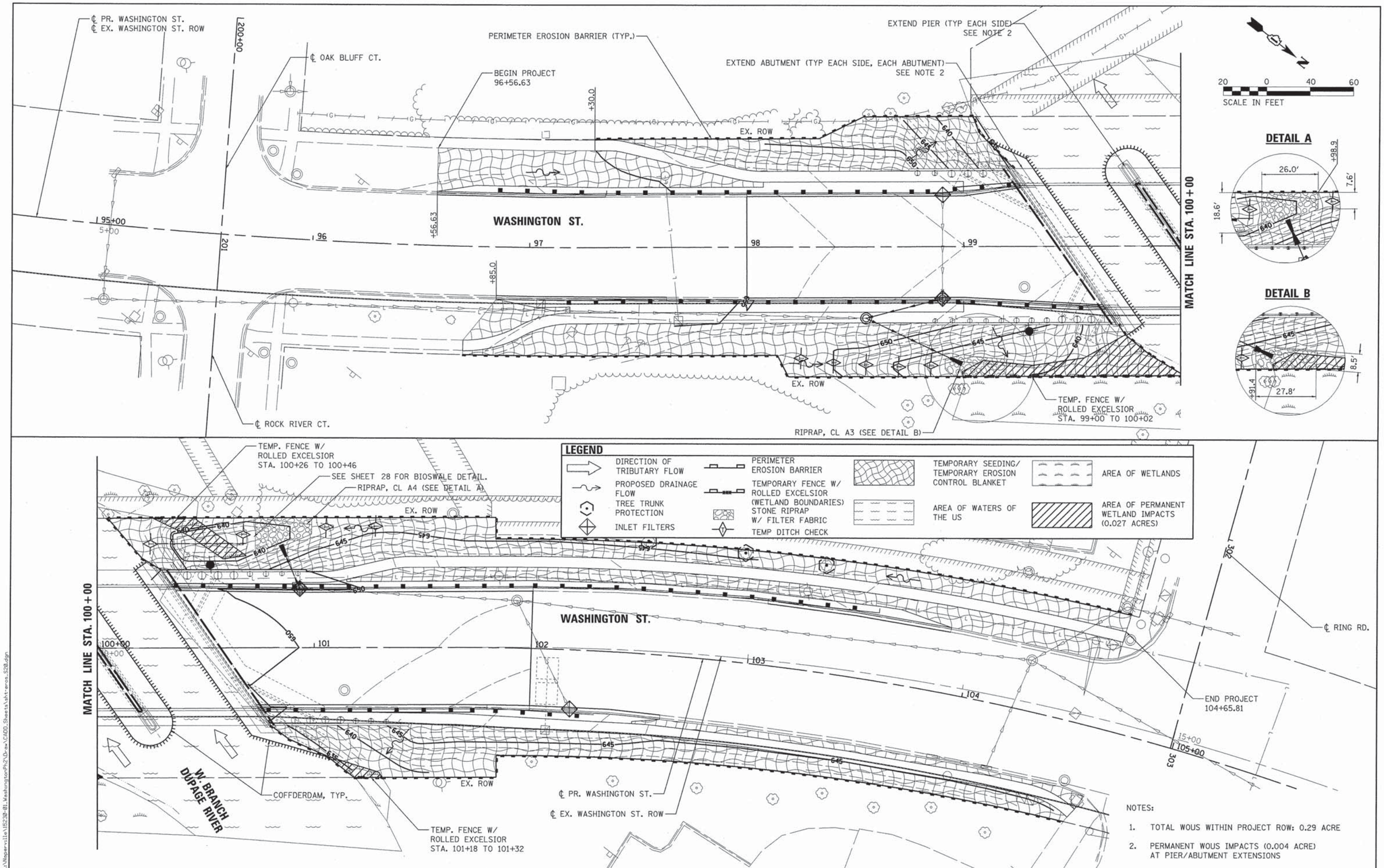

NOTES:

1. TOTAL WOUS WITHIN PROJECT ROW: 0.29 ACRE
2. PERMANENT WOUS IMPACTS (0.004 ACRE) AT PIER/ABUTMENT EXTENSIONS

FILE NAME = L:\Naperville\15230-01_Washington Pk2\Dwg\CADD_Sheets\sht-eros_528.dgn

CMT
License No. 184-000513
©Copyright CMT, Inc.

USER NAME = Peter Ross	DESIGNED - JR	REVISED -	
	DRAWN - MPM	REVISED -	
PLOT SCALE = 20.0000 ' / in.	CHECKED - PR	REVISED -	
PLOT DATE = 1/12/2016 1:58:49 PM	DATE - 12/7/2015	REVISED -	

STATE OF ILLINOIS
DEPARTMENT OF TRANSPORTATION

SOIL EROSION AND SEDIMENT CONTROL
WASHINGTON STREET

SCALE: 1"=20' | SHEET 2 OF 5 SHEETS | STA. 94+35.14 TO STA. 106+43.52

F.A.U. RTE.	SECTION	COUNTY	TOTAL SHEETS	SHEET NO.
2552	14-00161-00-BR	WILL	86	22

CONTRACT NO. 61C38

ILLINOIS FED. AID PROJECT DPC-M-4003(356)

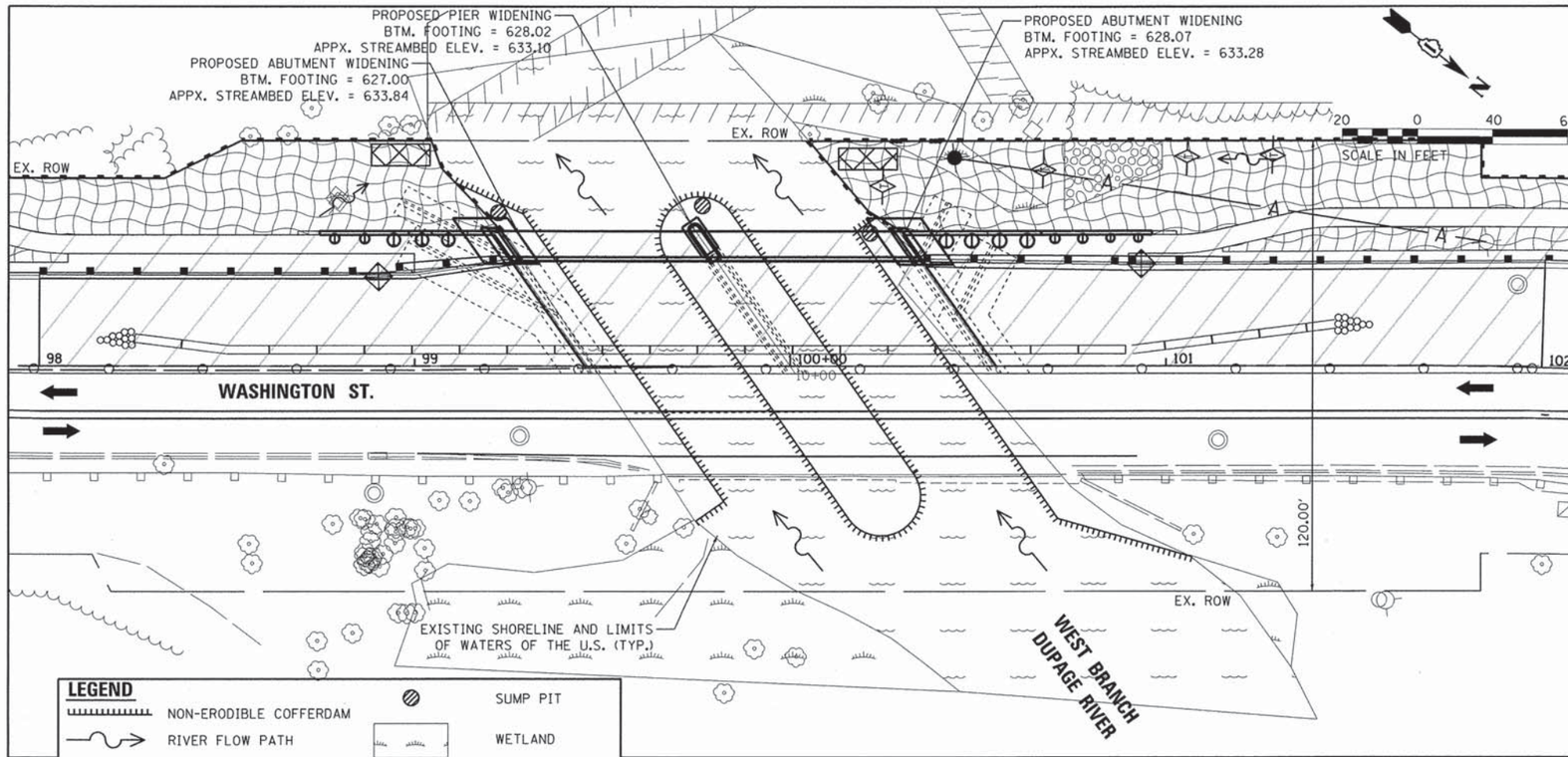

STAGE 1 GENERAL NOTES

1. COFFERDAMS SHALL BE CONSTRUCTED OF NON-ERODIBLE CONSTRUCTION, SUCH AS STEEL SHEET PILE, PORTADAM TYPE, BLADDER TYPE, OR ROCK TYPE. THE PLAN VIEW SHOWN IS ONLY TO DEPICT THE ANTICIPATED IMPACT OF THE CONSTRUCTION WITHIN THE WATERWAY AND THE ANTICIPATED NEED FOR COFFERDAMS. IT DOES NOT IMPLY THAT A CONVENTIONAL COFFERDAM IS THE MOST COST EFFECTIVE OR FEASIBLE MEANS TO ACHIEVE WORK IN THE DRY AS OUTLINED IN GUIDE BRIDGE SPECIAL PROVISION 73.

2. SUMP PITS SHALL BE INSTALLED IN EACH INDIVIDUAL WORK AREA, AND WORK SHALL ONLY BE PERFORMED IN THE DRY. WORK AREA SHALL BE COMPLETELY DEWATERED PRIOR TO ANY EXCAVATION.

3. DISCHARGE LOCATIONS FOR DEWATERING OPERATIONS SHALL BE PROTECTED FROM SOIL EROSION. ALL PUMPED DISCHARGES SHALL BE ROUTED FIRST THROUGH A FILTER BAG/SILT TRAP AND TEMPORARY ROCK CHECK PRIOR TO RE-ENTERING THE CHANNEL. DISCHARGE LOCATIONS SHOWN ARE POTENTIAL, AND MAY NEED TO BE ADJUSTED TO FIT FIELD CONDITIONS. LOCATION OF DISCHARGE SHALL BE SUBMITTED TO WSCSWCD FOR APPROVAL.

4. COFFERDAM FOR PIER WORK IS ANTICIPATED TO BE 4-SIDED, AND ENCOMPASSING ENTIRE PIER. COFFERDAMS FOR ABUTMENT WORK ARE ANTICIPATED TO BE PARTIAL TYPE, WITH ACCESS FROM THE SHORE.

PERMANENT IMPACTS TO WATERS OF THE US - STAGE 1

NORTH ABUTMENT: 35.8 SQ. FT. = 0.0008 ACRE
PIER: 38.8 SQ. FT. = 0.0009 ACRE
SOUTH ABUTMENT: 13.7 SQ. FT. = 0.0003 ACRE

TEMPORARY IMPACTS TO WATERS OF THE US - STAGE 1

NORTH ABUTMENT: 595.6 SQ. FT. = 0.014 ACRE
PIER: 1751.5 SQ. FT. = 0.040 ACRE
SOUTH ABUTMENT: 811.3 SQ. FT. = 0.019 ACRE

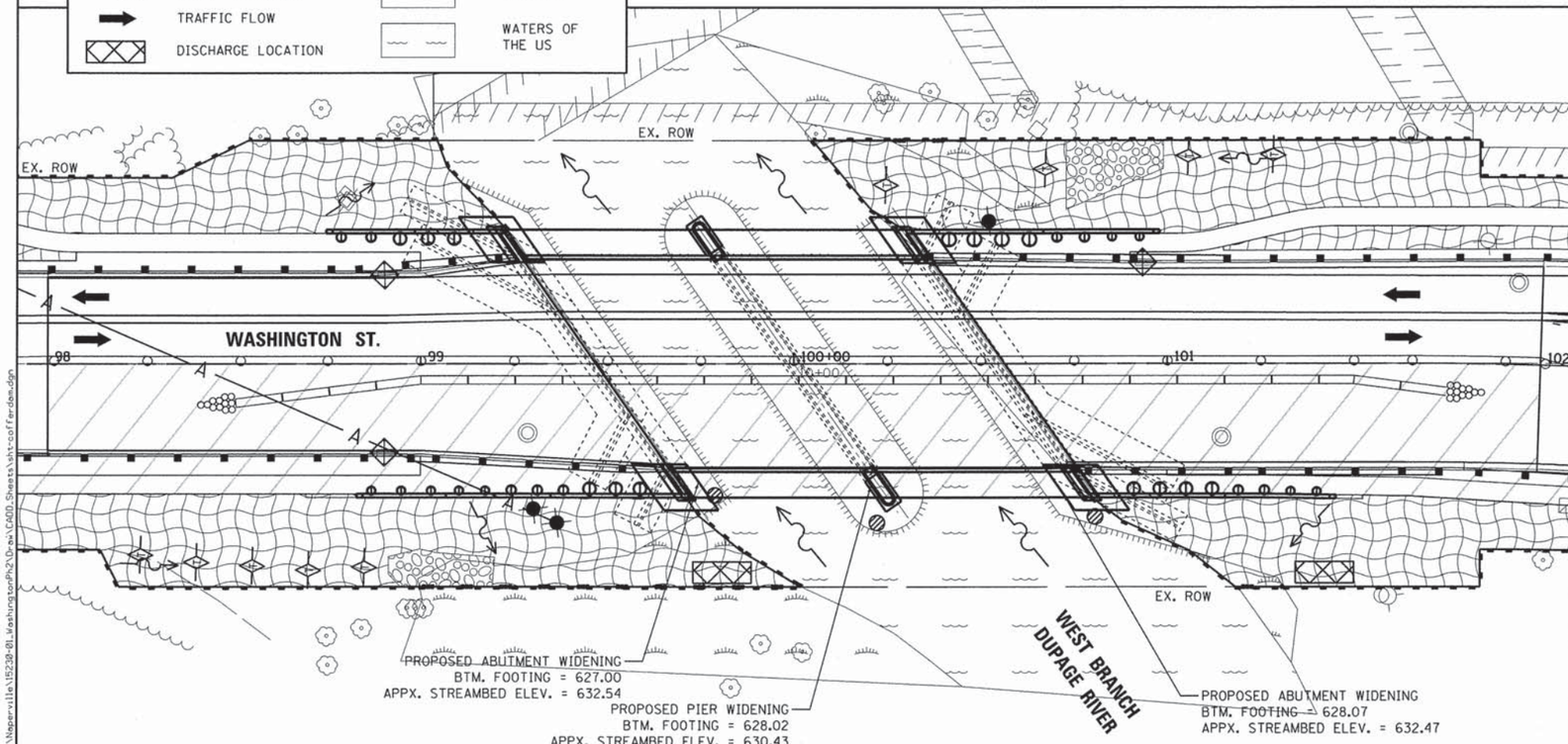

STAGE 2 GENERAL NOTES

1. MAINTAIN COFFERDAMS AS CONSTRUCTED IN STAGE 1.

2. SUMP PITS SHALL BE INSTALLED IN EACH INDIVIDUAL WORK AREA, AND WORK SHALL ONLY BE PERFORMED IN THE DRY. WORK AREA SHALL BE COMPLETELY DEWATERED PRIOR TO ANY EXCAVATION. SUMP PITS MAY NEED TO BE RELOCATED FROM STAGE 1, CLOSER TO THE WORK AREA TO MAINTAIN A DRY WORK AREA.

3. DISCHARGE LOCATIONS FOR DEWATERING OPERATIONS SHALL BE PROTECTED FROM SOIL EROSION. ALL PUMPED DISCHARGES SHALL BE ROUTED FIRST THROUGH A FILTER BAG/SILT TRAP AND TEMPORARY ROCK CHECK PRIOR TO RE-ENTERING THE CHANNEL. DISCHARGE LOCATIONS SHOWN ARE POTENTIAL, AND MAY NEED TO BE ADJUSTED TO FIT FIELD CONDITIONS. LOCATION OF DISCHARGE SHALL BE SUBMITTED TO WSCSWCD FOR APPROVAL.

PERMANENT IMPACTS TO WATERS OF THE US - STAGE 2

NORTH ABUTMENT: 16.7 SQ. FT. = 0.0004 ACRE
PIER: 38.8 SQ. FT. = 0.0009 ACRE
SOUTH ABUTMENT: 31.6 SQ. FT. = 0.0007 ACRE

FILE NAME = L:\Naperville\15238-01_Washington&Ph2\Dwg\CADD_Sheets\sht-cofferdam.dgn

CMT
License No. 184-000613 ©Copyright CMT, Inc.

USER NAME = Peter Ross	DESIGNED - PA	REVISED -	
	DRAWN - PA	REVISED -	
PLOT SCALE = 20.0013 ' / in.	CHECKED - PA	REVISED -	
PLOT DATE = 1/12/2016 1:58:51 PM	DATE - 12/7/2015	REVISED -	

STATE OF ILLINOIS
DEPARTMENT OF TRANSPORTATION

SOIL EROSION AND SEDIMENT CONTROL
SUGGESTED COFFERDAM PLAN
WASHINGTON STREET

SCALE: | SHEET 3 OF 5 SHEETS | STA. TO STA.

F.A.U. RTE.	SECTION	COUNTY	TOTAL SHEETS	SHEET NO.
2552	14-00161-00-BR	WILL	86	23

CONTRACT NO. 61C38

ILLINOIS FED. AID PROJECT DPC-M-4003(356)

A-FRAME PARTIAL COFFERDAM

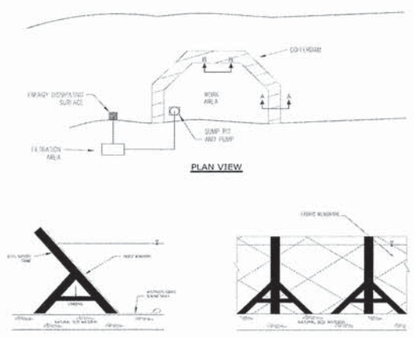

NOTES:
1. ALL DISCHARGES SHOULD BE ON ENERGY DISSIPATING SURFACES.
2. LOCATIONS FOR SUMP PIT, FILTRATION AREA, AND ENERGY DISSIPATING SURFACES MAY VARY DEPENDING ON SITE CONDITIONS.
3. A-FRAME SHOULD BE INSTALLED TO MANUFACTURER'S SPECIFICATIONS.

REFERENCE
Project
Designed Date
Checked Date
Approved Date

STANDARD DWG. NO. IUM-503AP
SHEET 2 OF 7
DATE 7-09-2012

BLADDER PARTIAL COFFERDAM

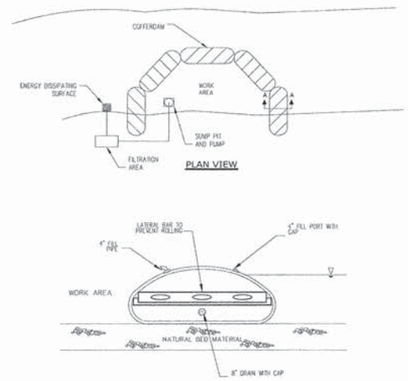

NOTES:
1. ALL DISCHARGES SHOULD BE ON ENERGY DISSIPATING SURFACES.
2. LOCATIONS FOR THE SUMP PIT, FILTRATION AREA, AND ENERGY DISSIPATING SURFACES MAY VARY DEPENDING ON SITE CONDITIONS.

REFERENCE
Project
Designed Date
Checked Date
Approved Date

STANDARD DWG. NO. IUM-503BP
SHEET 4 OF 7
DATE 7-09-2012

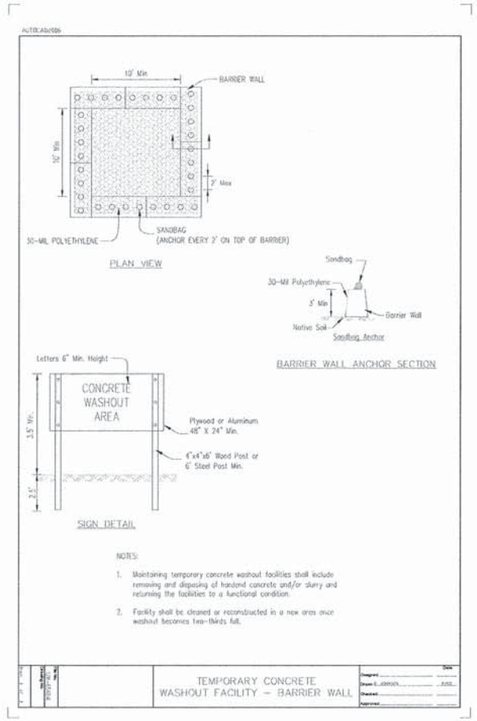

NOTES:
1. Maintaining temporary concrete washout facilities shall include removing and disposing of hardend concrete and/or slurry and returning the facilities to a functional condition.
2. Facility shall be cleaned or reconstructed in a new area once washout becomes two-thirds full.

TEMPORARY CONCRETE WASHOUT FACILITY - BARRIER WALL

STEEL SHEET PILE COFFERDAM

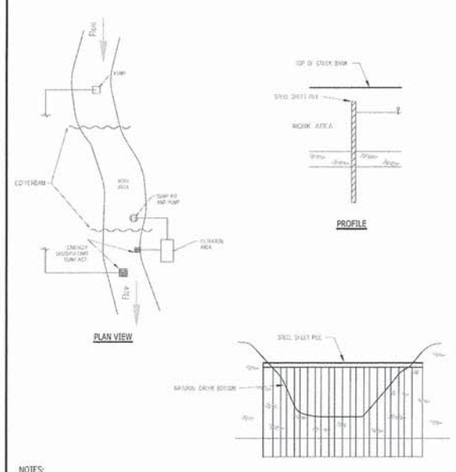

NOTES:
1. ALL DISCHARGES SHOULD BE ON ENERGY DISSIPATING SURFACES
2. LOCATION FOR SUMP PIT, FILTRATION AREA, AND ENERGY DISSIPATING SURFACES MAY VARY DEPENDING ON SITE CONDITIONS.

REFERENCE
Project
Designed Date
Checked Date
Approved Date

STANDARD DWG. NO. IUM-503SS
SHEET 7 OF 7
DATE 7-09-2012

SUMP PIT PLAN

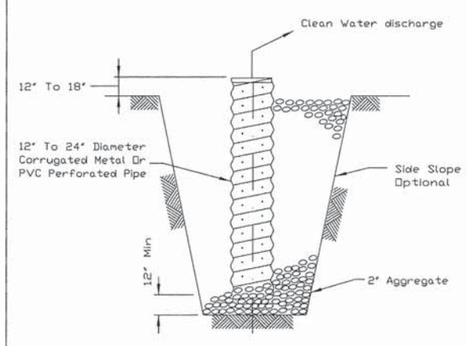

NOTES:
1. Pit dimensions are optional.
2. The standpipe will be constructed by perforating a 12'-24' diameter corrugated metal or PVC pipe.
3. A base of 2' aggregate will be placed in the pit to a minimum depth of 12'. After installing the standpipe, the pit surrounding the standpipe will then be backfilled with 2' aggregate.
4. The standpipe will extend 12' to 18' above the lip of the pit.
5. If discharge will be pumped directly to a storm drainage system, the standpipe will be wrapped with filter fabric before installation.
6. If desired, 1/4"-1/2" hardware cloth may be placed around the standpipe prior to attaching the filter fabric. This will increase the rate of water seepage into the pipe.

REFERENCE
Project
Designed Date
Checked Date
Approved Date

NRCS Natural Resources Conservation Service

STANDARD DWG. NO. IL-650
SHEET 1 OF 1
DATE 8-11-94

STABILIZED CONSTRUCTION ENTRANCE PLAN

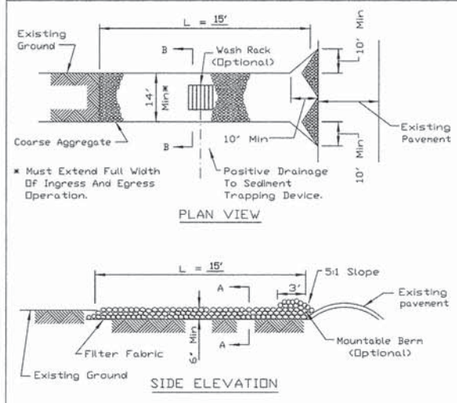

NOTES:
1. Filter fabric shall meet the requirements of material specification 592 GEOTEXTILE, Table I or 2, Class I, II or IV and shall be placed over the cleared area prior to the placing of rock.
2. Rock or reclaimed concrete shall meet one of the following IDOT coarse aggregate gradation, CA-1, CA-2, CA-3 or CA-4 and be placed according to construction specification 25 ROCKFILL using placement Method 1 and Class III compaction.
3. Any drainage facilities required because of washing shall be constructed according to manufacturers specifications.
4. If wash racks are used they shall be installed according to the manufacturer's specifications.

REFERENCE
Project
Designed Date
Checked Date
Approved Date

NRCS Natural Resources Conservation Service

STANDARD DWG. NO. IL-630
SHEET 1 OF 2
DATE 8-18-94

STABILIZED CONSTRUCTION ENTRANCE PLAN

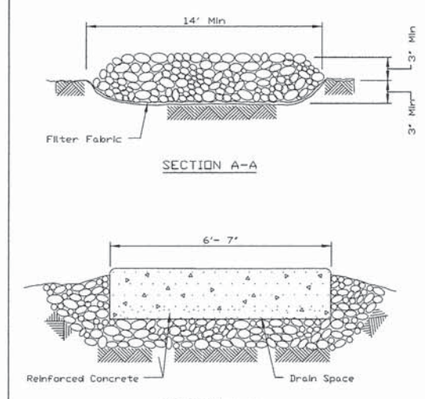

REFERENCE
Project
Designed Date
Checked Date
Approved Date

NRCS Natural Resources Conservation Service

STANDARD DWG. NO. IL-630
SHEET 2 OF 2
DATE 8-18-94

FILE NAME = L:\Naperville\152381-01_WashingtonPh2\Dwg\CADD_Sheets\sht-eros_standard drawings.dgn

CMT
License No. 184-000613

USER NAME = Peter Ross	DESIGNED - JR	REVISED -	
	DRAWN - JR	REVISED -	
PLOT SCALE = 1.0000 ' / in.	CHECKED - PR	REVISED -	
PLOT DATE = 12/12/2015 11:12:31 AM	DATE - 12/7/2015	REVISED -	

STATE OF ILLINOIS
DEPARTMENT OF TRANSPORTATION

SOIL EROSION AND SEDIMENT CONTROL
STANDARD DETAILS
WASHINGTON STREET

SCALE: N.T.S. | SHEET 4 OF 5 SHEETS | STA. | TO STA.

F.A.U. RTE.	SECTION	COUNTY	TOTAL SHEETS	SHEET NO.
2552	14-00161-00-BR	WILL	86	24
		CONTRACT NO. 61C38		
		ILLINOIS FED. AID PROJECT DPC-M-4003(356)		

INLET PROTECTION - PAVED AREAS
DROP-IN PROTECTION

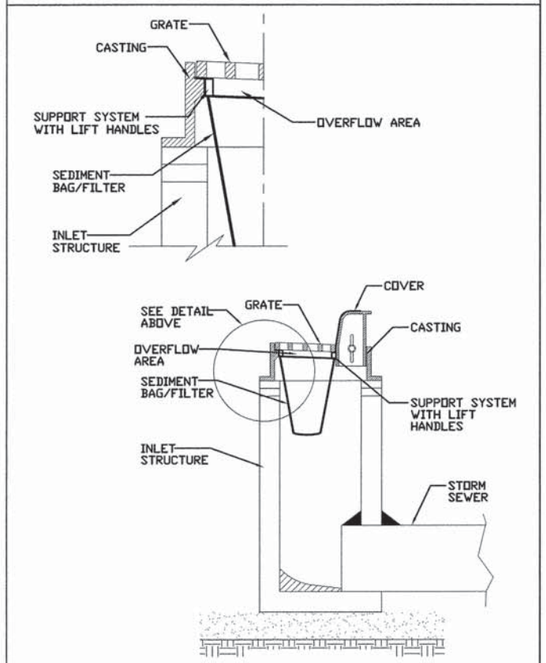

REFERENCE
Project
Designed Date
Checked Date
Approved Date

STANDARD DWG. NO.
IUM-561D
SHEET 1 OF 1
DATE 01-11-11

PIPE OUTLET TO FLAT AREA

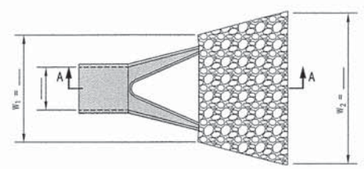

PLAN

NOTES:
1. The rock riprap shall meet IDOT requirements for Gradation No. _____ , Quality Designation "A" or as designated by engineer.
2. Geotextile (non-woven, needle punched) Minimum criteria:
   Grab tensile strength (lb) ASTM D 4632 _____ 202
   Elongation at failure (%) ASTM D 4632 _____ ≥ 50
   Trapezoidal tear strength (lb) ASTM D 4533 _____ 79
   Puncture strength (lb) ASTM D 6241 _____ 433
   Ultraviolet light (% retained strength) ASTM D 4355 _____ min 50
   Apparent opening size (AOS) ASTM D 4751 _____ max 0.22 mm (US sieve size 70)
   Permittivity sec^{-1}/ ASTM D 4491 _____ min 0.70)
3. Any geotextile splices shall overlap a minimum of 18 inches, with upstream or upslope geotextile overlapping the abutting downslope geotextile.
4. Apron width W_1 shall be at least 3 times the culvert pipe diameter. Apron width W_2 shall be at least to L_a plus the pipe diameter.
5. Rock thickness d shall be at least 1.5 times the riprap D_{100} size.
6. Apron length L_a and rock riprap shall be sized according to Illinois Urban Manual Rock Outlet Protection standard 910 minimum L_a = 10 ft.

STA.	PIPE DIA.	d	CL / BEDDING
98+99.1	12"	12"	RR-3 / N/A
100+84.8	24"	16"	RR-4 / 6"
SEE SHEET 22 FOR DETAILS			

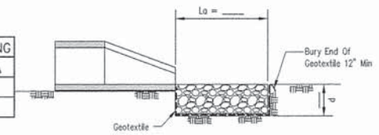

SECTION A-A

Date
Designed — N.M.PHILLIPS — 8/1/14
Drawn — —
Checked — —
Approved — —

USDA United States Department of Agriculture Natural Resources Conservation Service
File No. IL-ENG-44
Drawing No.
Page 1 of 1
Sheet of

EROSION BLANKET INSTALLATION DETAILS

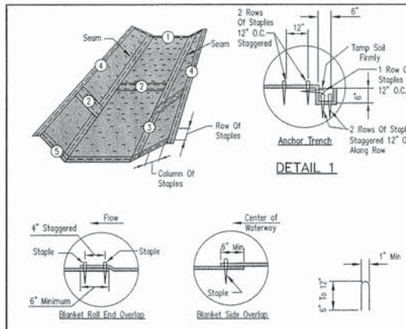

DETAIL 1

Blanket Roll End Overlap — DETAIL 2

Blanket Side Overlap — DETAIL 3

STAPLE DETAIL

NOTES:
1. Install erosion control blanket (ECB) over waterway: Waterway Width _____ ft; ECB width _____ ft; length _____ ft; Sta _____ to _____
2. The erosion control blanket shall consist of a machine produced mat of curled wood or coconut fibers, shall have an expected material life of a least 12 months, shall be new and unused, shall be furnished in rolls, and shall meet the minimum requirements stated in Table 1 below. Alternative material may be used as long as the expected material life is at least 12 months.
3. Prepare soil prior to installing erosion control blanket, including seeding, fertilizing, and lime application.
4. The erosion control blanket shall be placed in firm contact with the soil and not be allowed to bridge over surface irregularities. The blanket shall not be stretched.
5. Start laying the blankets by rolling center blanket in the direction of flow, centered on the centerline of waterway. There shall not be an overlap of blankets at the center of the waterway.
6. The erosion control blanket shall be anchored, overlapped, and stapled according to manufacturer's instructions. If no manufacturer's instructions are available, install the blanket as follows:
   a. Staples shall be "U" shaped, 0.12 in diameter wire or greater (#11 gauge). See Staple Detail for dimensions.
   b. Bury upstream end of blanket in a trench 6 inch wide by 6 inch deep and stapled in staggered rows across the width as shown in Detail 1.
   c. For joining ends of rolls, overlap end of upslope blanket a minimum of 6 inches over downslope blanket (shingle style). Use a double row of staggered staples 4 inches apart, as shown in Detail 2.
   d. Blankets on side slopes shall overlap a minimum 6 inches over the blanket below (shingle style). Staple overlap at 12 inch intervals. See Detail 3.
   e. The outer edge along sides of the blanket shall be stapled every 12 inches. See Detail 4.
   f. Staples are to be placed alternately in columns (in the direction of the waterway) 2 feet apart and in rows (across the waterway) 3 feet apart, throughout the area covered by erosion blanket.
   g. Downstream (terminal) end of blanket shall be stapled with a double row of staggered staples 12 inches apart. See Detail 5.

TABLE 1. MINIMUM REQUIREMENTS FOR EROSION CONTROL BLANKET		
(See Note 2)	Coconut Blanket	Wood Fiber Blanket
Type of Fiber	100% coconut fibers	100% curled wood fibers
Weight, lbs/sq. yd	0.50	0.63
Fiber Length	N/A	80% of fibers > 6 in.
Fiber Dimensions	N/A	0.021 in. x 0.042 in.
Netting Netting Required ? ☐ Yes ☐ No	Cover Top and bottom of blanket with a max. 5/8" x 5/8" opening size netting, bound to the mat on max. 1.5" centers.	Cover Top and bottom of blanket with a max. 5/8" x 5/8" opening size netting

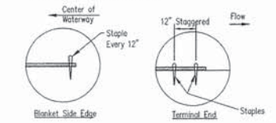

DETAIL 4 — DETAIL 5

Not To Scale

NRCS Natural Resources Conservation Service

File No. IL-ENG-61
Drawing No.
Page 1 of 1
Sheet of

URETHANE FOAM GEOTEXTILES

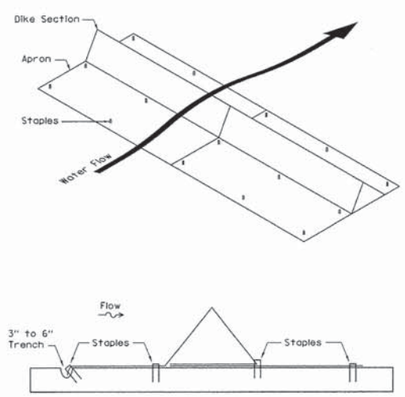

REFERENCE
Project
Designed Date
Checked Date
Approved Date

STANDARD DWG. NO.
IUM-514
SHEET 1 OF 1
DATE 6-30-11

ROCK CHECK DAM - COARSE AGGREGATE

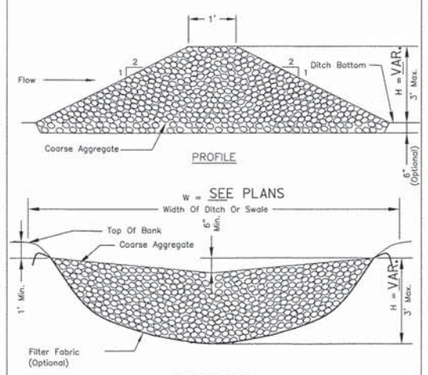

NOTES:
1. Filter fabric shall meet the requirements of material specification 592 GEOTEXTILE, Table 1 or 2, Class I, II, or IV and shall be placed over the cleared area prior to the placing of rock.
2. Coarse aggregate shall meet one of the following IDOT gradations, CA-1, CA-2, CA-3, or CA-4 and be placed according to construction specification 25 ROCKFILL using placement Method 1 and Class III compaction.
3. For added stability, the base of the dam may be keyed 6 inches into the soil.
4. See plans for spacing of dams and H dimensions.
5. Drainage area to each dam shall be less than 2 acres.
6. Use ROCK CHECK DAM-RIPRAP IL-605R for drainage areas of 2 to 10 acres.

REFERENCE
Project
Designed Date
Checked Date
Approved Date

NRCS Natural Resources Conservation Service

STANDARD DWG. NO.
IL-605CA
SHEET 1 OF 1
DATE 1-29-99

SILT FENCE

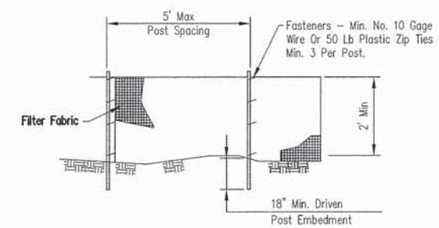

ELEVATION

NOTES:
1. Temporary silt fence shall be installed prior to any grading work in the area to be protected. Fence shall be maintained throughout the construction period and removed in conjunction with the final grading and site stabilization.
2. Filter fabric shall meet the requirements of material specification 592 Geotextile Table 1 or 2, Class I with equivalent opening size of at least 30 for nonwoven and 50 for woven.
3. Fence posts shall be either wood post with a minimum cross-sectional area of 1.5" X 1.5" or a standard steel post.
4. When splices are necessary make splice at post according to splice detail. Place the end post of the second fence inside the end post of the first fence. Rotate both posts together at least 180 degrees to create a tight seal with the fabric material. Cut the fabric near the bottom of the posts to accommodate the 6 inch flap. Then drive both posts and bury the flap. Compact backfill well.

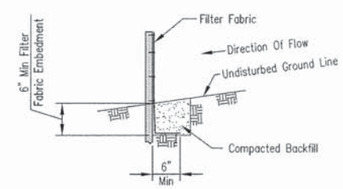

FABRIC ANCHOR DETAIL

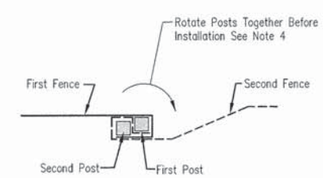

SPLICE DETAIL—PLAN VIEW

Date
Designed — W. GRIGNES — 8/1/14
Drawn —
Checked —
Approved —

USDA United States Department of Agriculture Natural Resources Conservation Service

File No. IL-ENG-49
Drawing No.
Page 1 of 1
Sheet of

FILE NAME = L:\Naperville\15238-01_Washington\Ph2\Drawings\CADD_Sheets\shtareas_standard drawings_02.dgn

CMT
License No. 184-000613 ©Copyright CMT, Inc.

USER NAME = Peter Ross	DESIGNED - JR	REVISED -	
	DRAWN - JR	REVISED -	
PLOT SCALE = 1.0000 ' / in.	CHECKED - PR	REVISED -	
PLOT DATE = 12/12/2015 11:12:51 AM	DATE - 12/7/2015	REVISED -	

STATE OF ILLINOIS
DEPARTMENT OF TRANSPORTATION

SOIL EROSION AND SEDIMENT CONTROL
STANDARD DETAILS
WASHINGTON STREET

SCALE: N.T.S. | SHEET 5 OF 5 SHEETS | STA. | TO STA.

F.A.U. RTE.	SECTION	COUNTY	TOTAL SHEETS	SHEET NO.
2552	14-00161-00-BR	WILL	86	25

CONTRACT NO. 61C38

ILLINOIS FED. AID PROJECT DPC-M-4003(356)

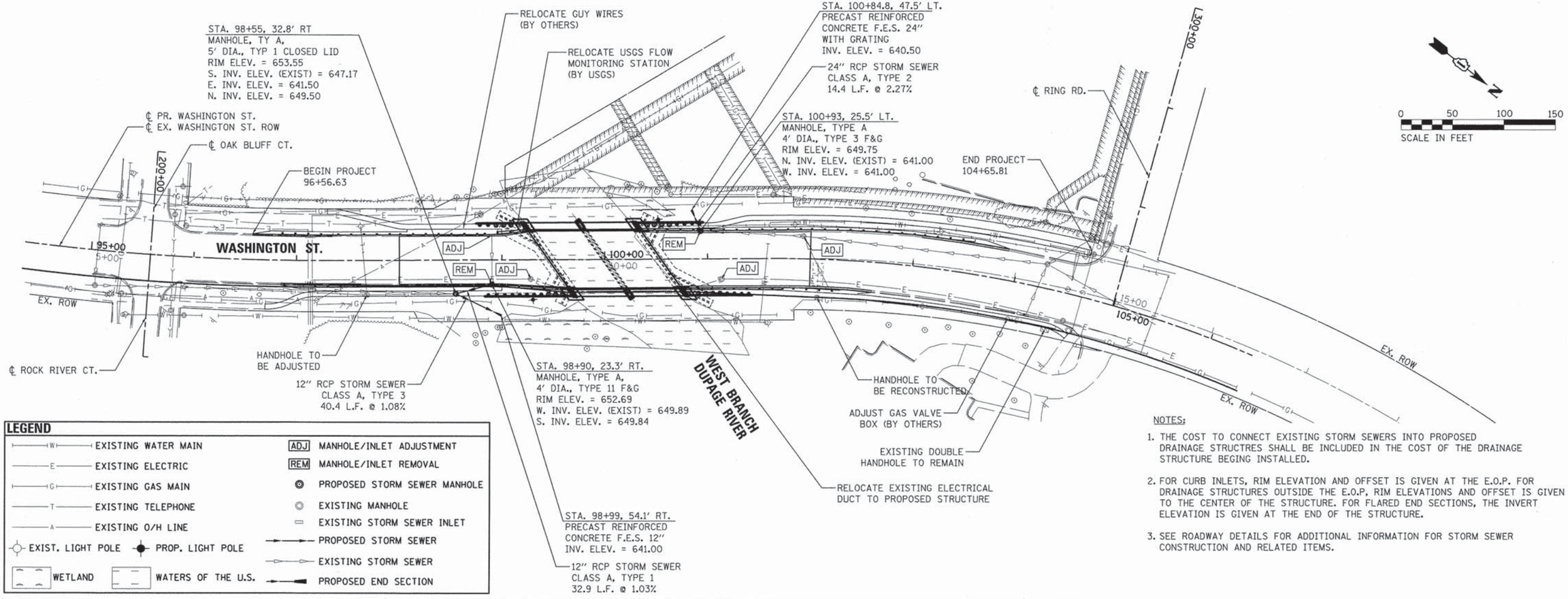

LEGEND

EXISTING WATER MAIN	MANHOLE/INLET ADJUSTMENT
EXISTING ELECTRIC	MANHOLE/INLET REMOVAL
EXISTING GAS MAIN	PROPOSED STORM SEWER MANHOLE
EXISTING TELEPHONE	EXISTING MANHOLE
EXISTING O/H LINE	EXISTING STORM SEWER INLET
EXIST. LIGHT POLE / PROP. LIGHT POLE	PROPOSED STORM SEWER
	EXISTING STORM SEWER
WETLAND / WATERS OF THE U.S.	PROPOSED END SECTION

NOTES:

1. THE COST TO CONNECT EXISTING STORM SEWERS INTO PROPOSED DRAINAGE STRUCTRES SHALL BE INCLUDED IN THE COST OF THE DRAINAGE STRUCTURE BEGING INSTALLED.
2. FOR CURB INLETS, RIM ELEVATION AND OFFSET IS GIVEN AT THE E.O.P. FOR DRAINAGE STRUCTURES OUTSIDE THE E.O.P, RIM ELEVATIONS AND OFFSET IS GIVEN TO THE CENTER OF THE STRUCTURE. FOR FLARED END SECTIONS, THE INVERT ELEVATION IS GIVEN AT THE END OF THE STRUCTURE.
3. SEE ROADWAY DETAILS FOR ADDITIONAL INFORMATION FOR STORM SEWER CONSTRUCTION AND RELATED ITEMS.

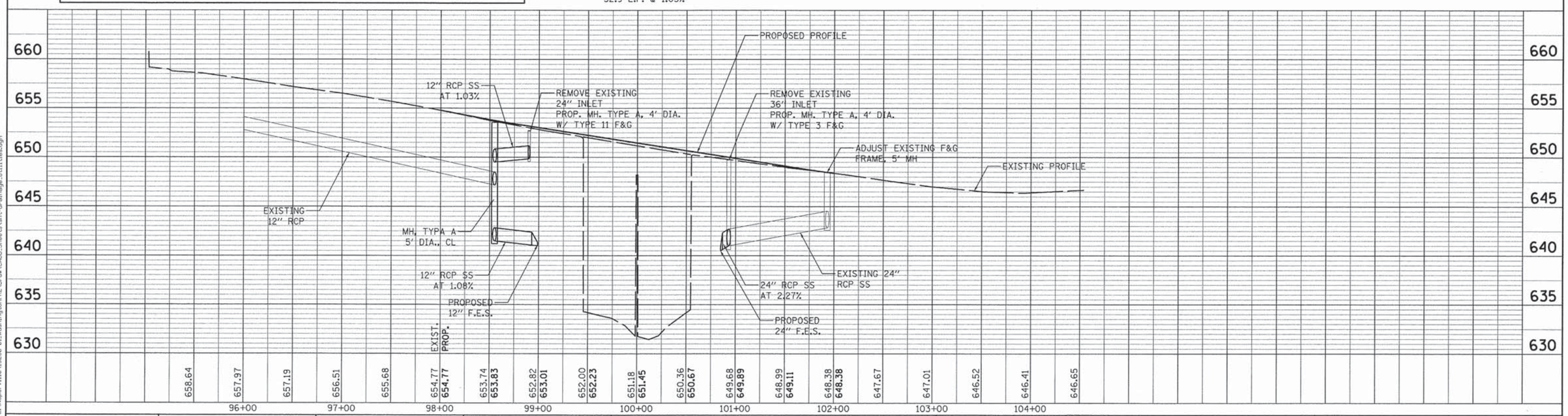

CMT	USER NAME = Peter Ross	DESIGNED - JR	REVISED -
		DRAWN - MPM	REVISED -
	PLOT SCALE = 50.0000 ' / in.	CHECKED - PR	REVISED -
	PLOT DATE = 1/12/2016 1:58:52 PM	DATE - 12/7/2015	REVISED -

License No. 184-000613 ©Copyright CMT, Inc.

STATE OF ILLINOIS
DEPARTMENT OF TRANSPORTATION

DRAINAGE AND UTILITIES
WASHINGTON STREET

SCALE: 1"=50' | SHEET NO. 1 OF 1 SHEETS | STA. 94+35.14 TO STA. 106+43.52

F.A.U. RTE.	SECTION	COUNTY	TOTAL SHEETS	SHEET NO.
2552	14-00161-00-BR	WILL	86	26

CONTRACT NO. 61C38

FED. ROAD DIST. NO. | ILLINOIS | FED. AID PROJECT DPC-M-4003(356)

PLAN: SURVEYED / PLOTTED / ALIGNMENT CHECKED / RT. OF WAY CHECKED / CADD FILE NAME — NOTE BOOK NO. — BY — DATE

PROFILE: SURVEYED / PLOTTED / GRADES CHECKED / B.M. NOTED / STRUCTURE NOTATNS CHKD — NOTE BOOK NO. — BY — DATE

FILE NAME = L:\Naperville\15230-01_WashingtonPh2\Draw\CADD_Sheets\sht-drainage_utilities.dgn

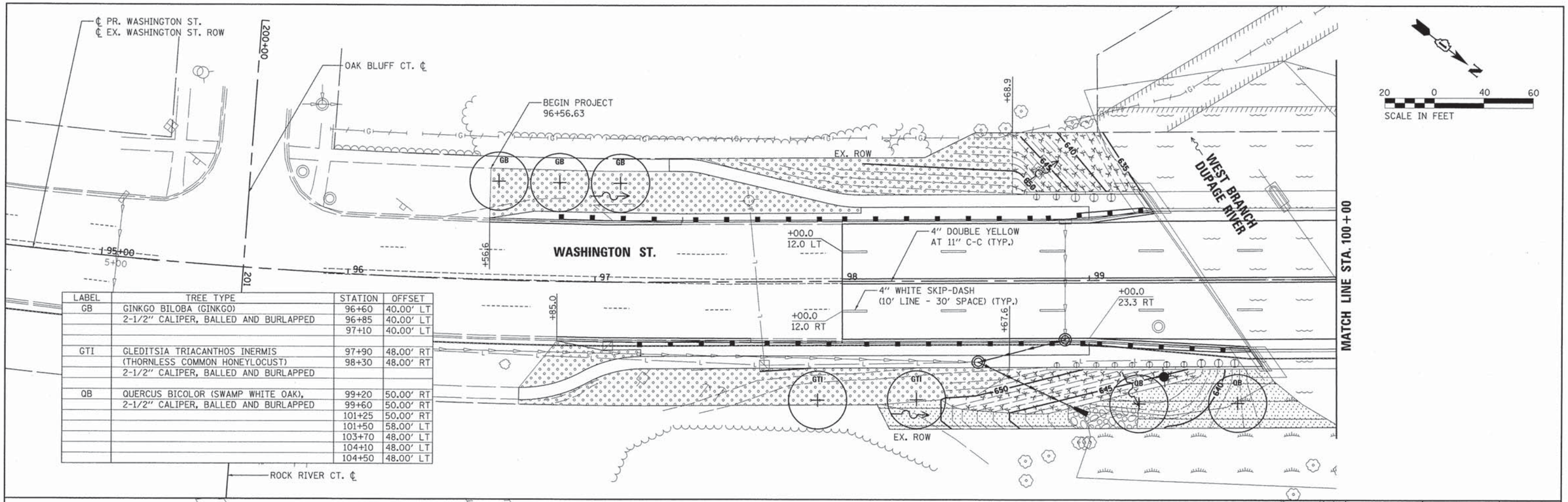

LABEL	TREE TYPE	STATION	OFFSET
GB	GINKGO BILOBA (GINKGO)	96+60	40.00' LT
	2-1/2" CALIPER, BALLED AND BURLAPPED	96+85	40.00' LT
		97+10	40.00' LT
GTI	GLEDITSIA TRIACANTHOS INERMIS	97+90	48.00' RT
	(THORNLESS COMMON HONEYLOCUST)	98+30	48.00' RT
	2-1/2" CALIPER, BALLED AND BURLAPPED		
QB	QUERCUS BICOLOR (SWAMP WHITE OAK),	99+20	50.00' RT
	2-1/2" CALIPER, BALLED AND BURLAPPED	99+60	50.00' RT
		101+25	50.00' RT
		101+50	58.00' LT
		103+70	48.00' LT
		104+10	48.00' LT
		104+50	48.00' LT

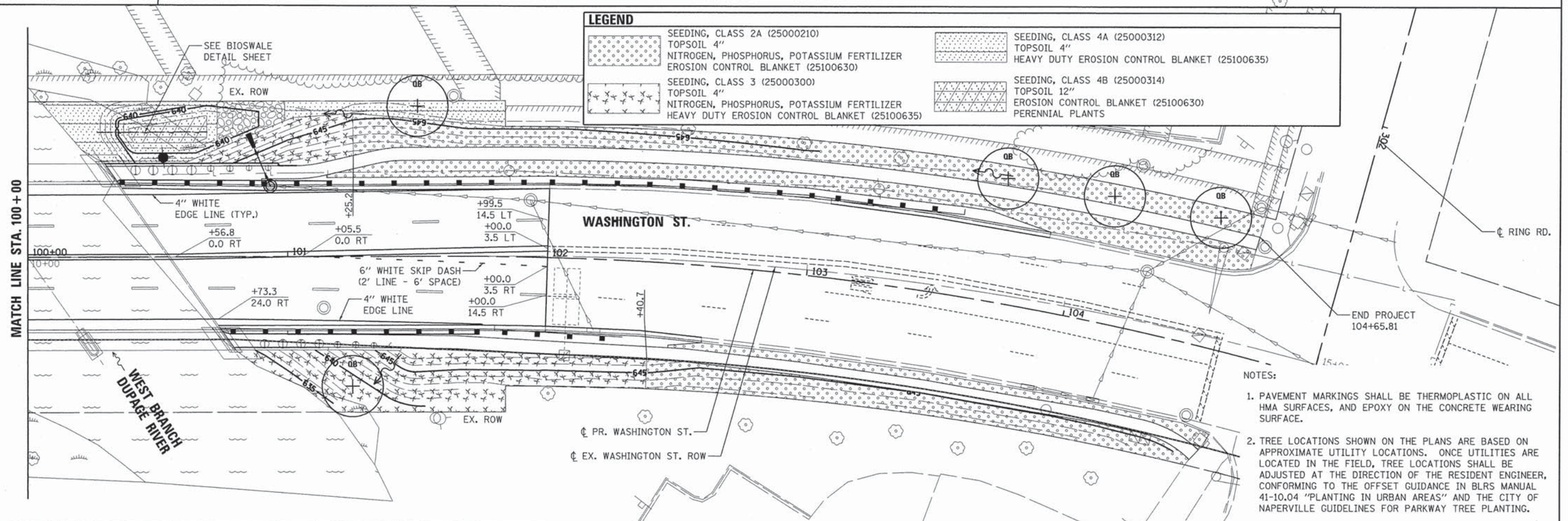

NOTES:

1. PAVEMENT MARKINGS SHALL BE THERMOPLASTIC ON ALL HMA SURFACES, AND EPOXY ON THE CONCRETE WEARING SURFACE.
2. TREE LOCATIONS SHOWN ON THE PLANS ARE BASED ON APPROXIMATE UTILITY LOCATIONS. ONCE UTILITIES ARE LOCATED IN THE FIELD, TREE LOCATIONS SHALL BE ADJUSTED AT THE DIRECTION OF THE RESIDENT ENGINEER, CONFORMING TO THE OFFSET GUIDANCE IN BLRS MANUAL 41-10.04 "PLANTING IN URBAN AREAS" AND THE CITY OF NAPERVILLE GUIDELINES FOR PARKWAY TREE PLANTING.

FILE NAME = L:\Naperville\15238-81_Washington&PhC\Dwg\C400_Sheets\sht-pavement marking and landscaping_S28.dgn

CMT
License No. 184-000613

USER NAME = Peter Ross	DESIGNED - JR	REVISED -	
	DRAWN - MPM	REVISED -	
PLOT SCALE = 20.0000 ' / in.	CHECKED - PR	REVISED -	
PLOT DATE = 1/12/2016 1:58:54 PM	DATE - 12/7/2015	REVISED -	

STATE OF ILLINOIS
DEPARTMENT OF TRANSPORTATION

PAVEMENT MARKING AND LANDSCAPING
WASHINGTON STREET

SCALE: 1"=20' | SHEET 1 OF 2 SHEETS | STA. 94+35.14 TO STA. 106+43.52

F.A.U. RTE.	SECTION	COUNTY	TOTAL SHEETS	SHEET NO.
2552	14-00161-00-BR	WILL	86	27

CONTRACT NO. 61C38

ILLINOIS FED. AID PROJECT DPC-M-4003(356)

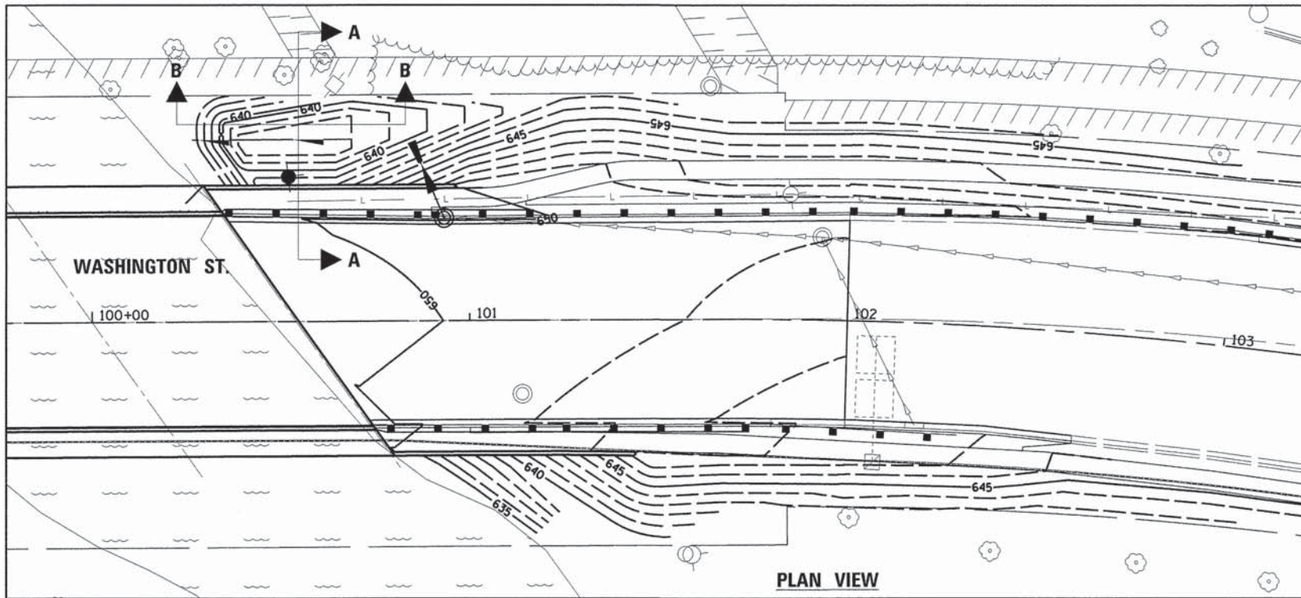

PLAN VIEW

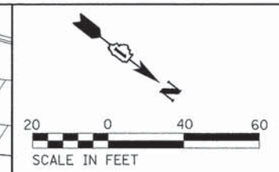

PERENNIAL PLANTS FOR BIOSWALE

PERENNIAL PLANTS, WETLAND TYPE, 2" DIAMETER X 4" DEEP PLUG - 1.1 UNITS (SPACED AT 18" APART FROM CENTER)

SPARTINA PECTINATA	PRARIE CORDGRASS	110 EACH

BIOSWALE NOTES

1. 4" PIPE UNDERDRAIN, CA-7 AGGREGATE BASE, AND GEOTECHNICAL FABRIC SHALL NOT BE PAID FOR SEPARATELY, BUT SHALL BE INCLUDED IN THE PAY ITEM "PIPE UNDERDRAINS 4" (MODIFIED)." SEE SPECIAL PROVISIONS

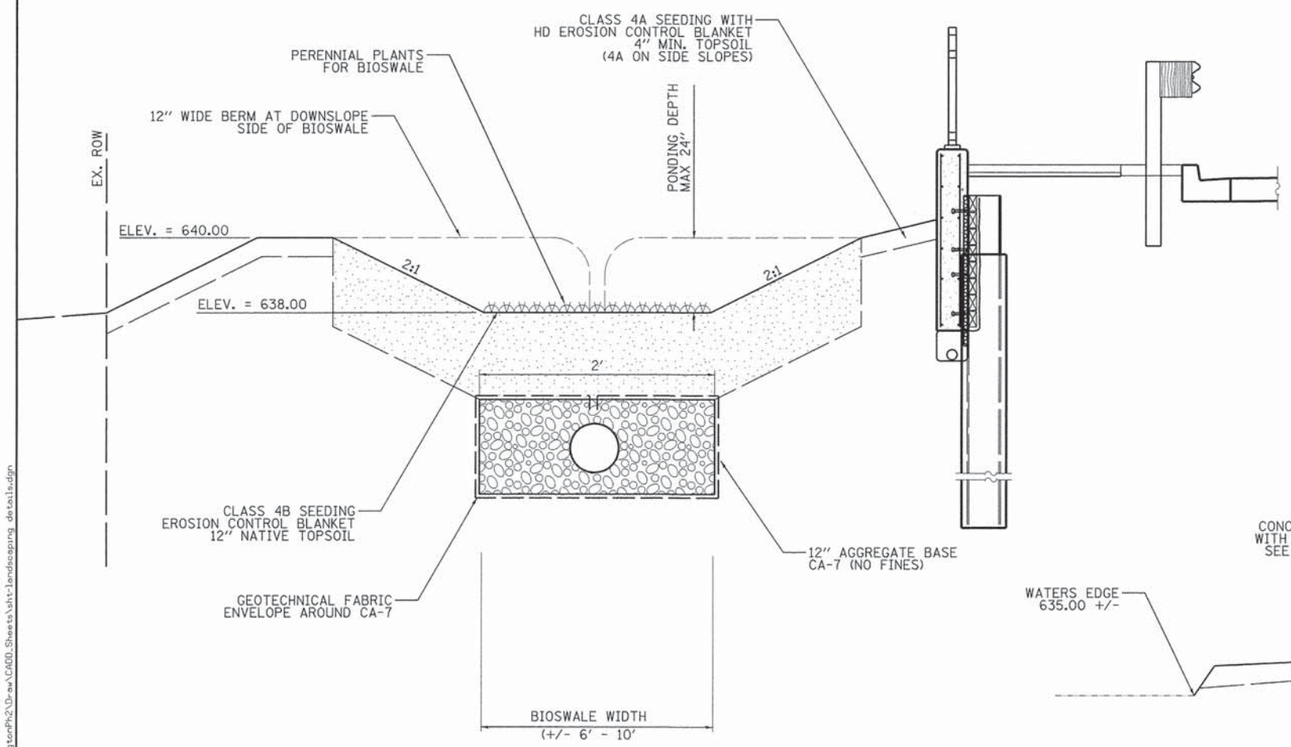

BIOSWALE DETAIL

SECTION A-A

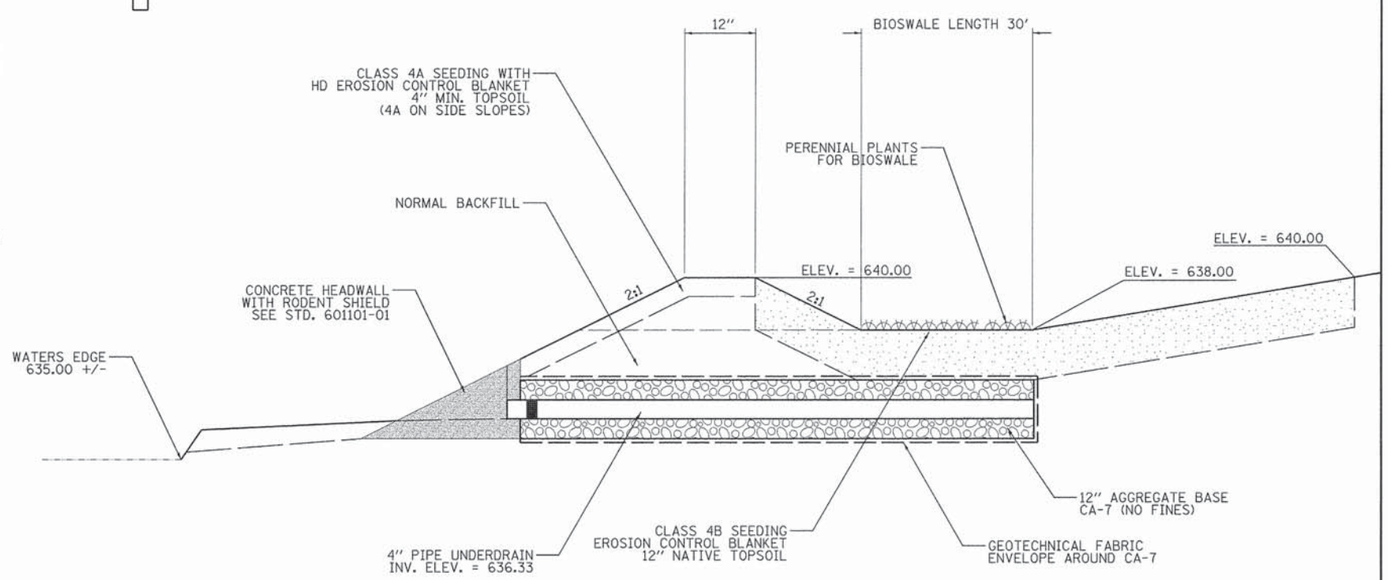

BIOSWALE DETAIL

SECTION B-B

FILE NAME = L:\Naperville\15239-01_WashingtonPh2\D-aw\CADD_Sheets\sht-landscaping details.dgn

CMT
Licensee No. 184-000613 ©Copyright CMT, Inc.

USER NAME = Peter Ross	DESIGNED - JR	REVISED -
	DRAWN - JR	REVISED -
PLOT SCALE = 20.0000 ' / in.	CHECKED - PR	REVISED -
PLOT DATE = 12/12/2015 11:13:11 AM	DATE - 12/7/2015	REVISED -

STATE OF ILLINOIS
DEPARTMENT OF TRANSPORTATION

PAVEMENT MARKING AND LANDSCAPING
BIOSWALE DETAIL
WASHINGTON STREET

SCALE: N.T.S. | SHEET 2 OF 2 SHEETS | STA. | TO STA.

F.A.U. RTE.	SECTION	COUNTY	TOTAL SHEETS	SHEET NO.
2552	14-00161-00-BR	WILL	86	28

CONTRACT NO. 61C38

ILLINOIS FED. AID PROJECT DPC-M-4003(356)

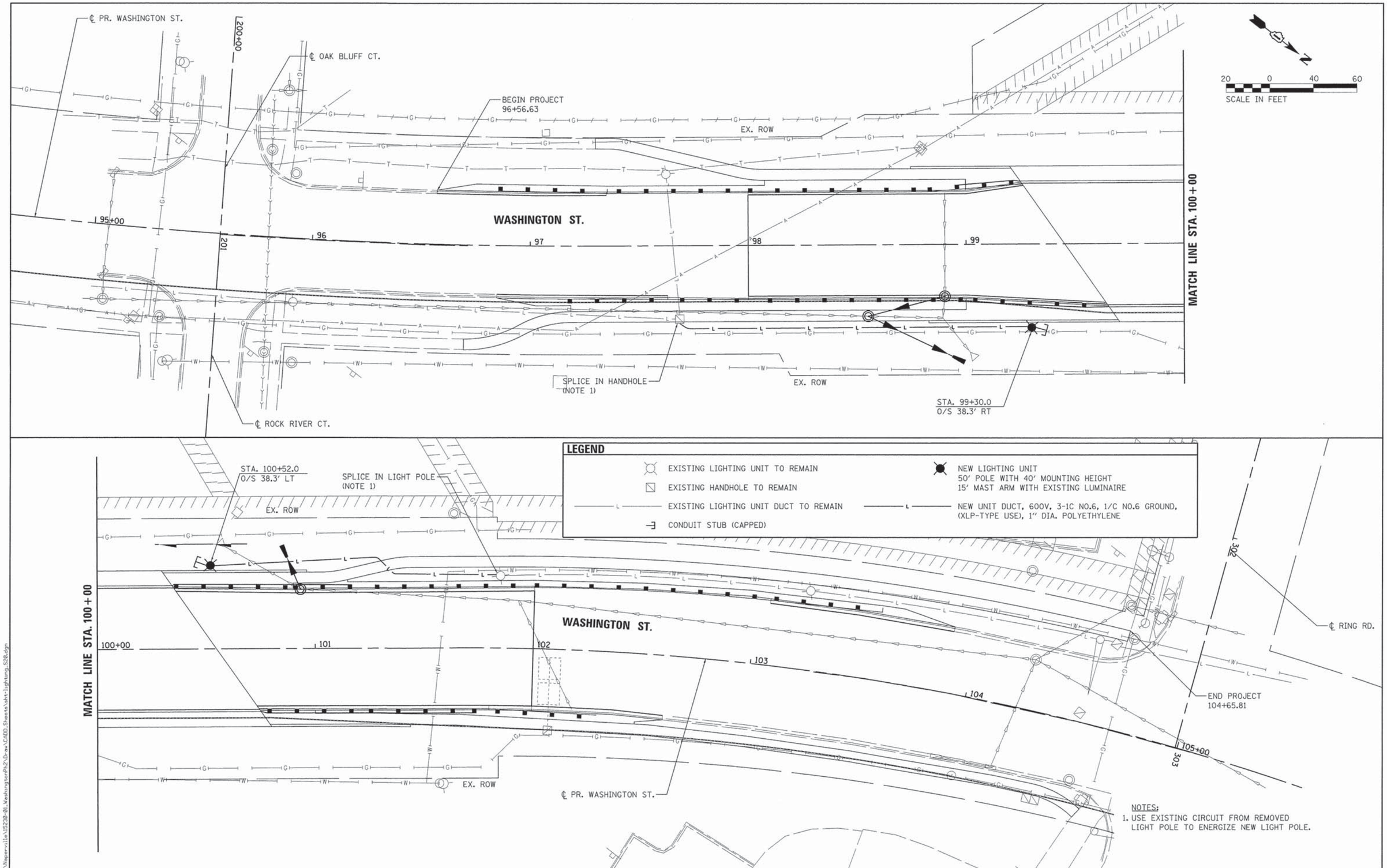

NOTES:
1. USE EXISTING CIRCUIT FROM REMOVED LIGHT POLE TO ENERGIZE NEW LIGHT POLE.

FILE NAME = L:\Naperville\15230-01_WashingtonPh2\Draw\CADD_Sheets\sht-lighting_528.dgn

CMT
License No. 184-000613

USER NAME = Peter Ross	DESIGNED - CPT	REVISED -	
	DRAWN - CPT	REVISED -	
PLOT SCALE = 20.0000 ' / in.	CHECKED - AB	REVISED -	
PLOT DATE = 12/12/2015 11:13:12 AM	DATE - 12/7/2015	REVISED -	

STATE OF ILLINOIS
DEPARTMENT OF TRANSPORTATION

ROADWAY LIGHTING
WASHINGTON STREET

SCALE: 1"=20' | SHEET 1 OF 2 SHEETS | STA. 94+35.14 TO STA. 106+43.52

F.A.U. RTE.	SECTION	COUNTY	TOTAL SHEETS	SHEET NO.
2552	14-00161-00-BR	WILL	86	29
		CONTRACT NO. 61C38		
		ILLINOIS FED. AID PROJECT DPC-M-4003(356)		

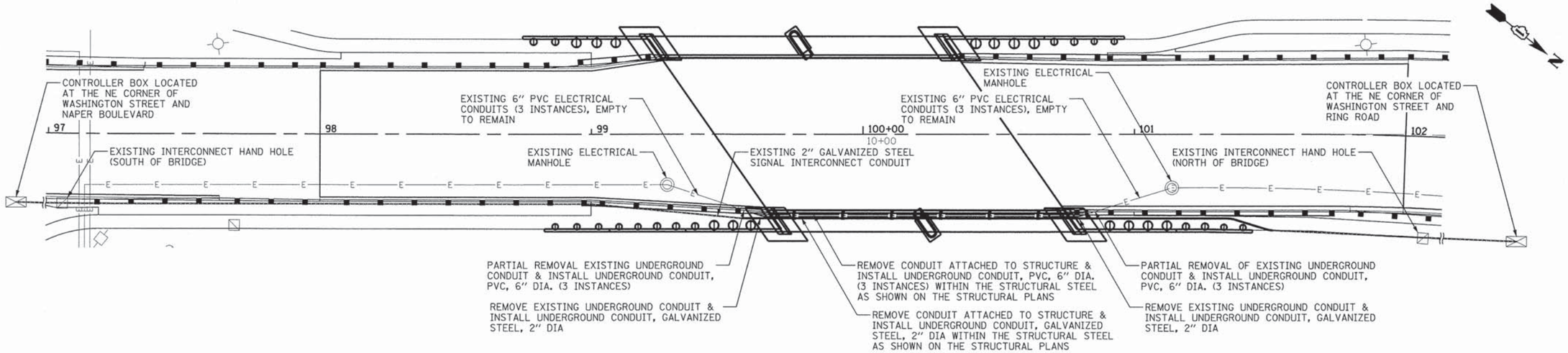

CONDUIT RELOCATION DETAIL

SIGNAL CONDUIT NOTES

1. REMOVE EXISTING INTERCONNECT FIBER OPTIC CABLE FROM THE RING ROAD CONTROLLER BOX TO THE INTERCONNECT HAND HOLE SOUTH OF THE BRIDGE. THE CONTRACTOR IS RESPONSIBLE FOR PROTECTING THE FIBER OPTIC CABLE DURING CONSTRUCTION. DAMAGED TO THE EXISTING INTERCONNECT FIBER OPTIC CABLE WILL BE ADDRESSED BY THE CONTRACTOR AT NO ADDITIONAL COMPENSATION TO THE CONTRACTOR.

2. INSTALL TEMPORARY TRAFFIC SIGNAL INTERCONNECT, EITHER WIRED USING EXISTING INTERCONNECT FIBER OPTIC CABLE OR WIRELESS, PER THE PROJECT SPECIFICATIONS (TO BE PAID FOR AS TEMPORARY TRAFFIC SIGNAL INTERCONNECT).

3. REMOVE A SUFFICIENT AMOUNT OF EXISTING CONDUIT FROM BELOW THE EMBANKMENT (TO BE PAID FOR AS REMOVE EXISTING UNDERGROUND CONDUIT) TO FACILITE CONDUIT RELOCATION.

4. REMOVE THE EXISTING 2" GALVANIZED STEEL CONDUIT FROM THE BRIDGE (INCLUDED IN COST OF REMOVAL OF EXISTING PRECAST PRESTRESSED CONCRETE DECK BEAMS), WHICH EXTENDS FROM WING WALL TO WING WALL. EXPOSE CONDUIT FROM BELOW THE EMBANKMENT ON THE OPPOSITE SIDE OF THE WING WALLS TO A DISTANCE SUFFICIENT TO REALIGN THE CONDUIT INTO THE PROPOSED LOCATION, AND TO AVOID CONFLICT WITH THE PROPOSED NORTHEAST RETAINING WALL PILES.

5. THE STRUCTURAL PLANS INCLUDE AN OPENING TO ACCOMODATE THE PROPOSED SIGNAL INTERCONNECT CONDUIT THROUGH THE PROPOSED ABUTMENT AND PIER EXTENSIONS, AND TO HANG BELOW THE SECOND BEAM FROM THE EAST FASCIA AND PROTECTED WITH A STEEL PLATE. REFER TO THE STRUCTURAL PLANS FOR DETAILS.

6. LAY NEW CONDUIT IN EMBANKMENT BEHIND THE PROPOSED RETAINING WALL AND FEED NEW CONDUIT THROUGH ABUTMENTS AND PIER TO REST WITHIN THE STRUCTURAL STEEL (EACH TO BE PAID FOR AS UNDERGROUND CONDUIT, GALVANIZED STEEL, 2" DIA.). FOLLOW CITY CONDUIT TRENCH STANDARD DETAIL. CONNECTIONS SHALL BE MADE TO THE EXISTING CONDUIT USING BENDS NOT TO EXCEED 18 INCHES IN RADIUS.

7. EXPANSION COUPLINGS SHALL BE INSTALLED NEAR EACH ABUTMENT. COST SHALL BE INCLUDED IN UNDERGROUND CONDUIT, GALVANIZED STEEL, 2" DIA.).

8. WHEN THE PROPOSED SIGNAL CONDUIT IS IN PLACE, REINSTALL THE INTERCONNECT FIBER OPTIC CABLE (INCLUDED IN COST OF TEMPORARY TRAFFIC SIGNAL INTERCONNECT) AS DESCRIBED IN THE SPECIFICATIONS.

ELECTRICAL CONDUIT NOTES

1. REMOVE THE THREE EXISTING 6" PVC CONDUITS FROM THE BRIDGE, (INCLUDED IN COST OF REMOVAL OF EXISTING PRECAST PRESTRESSED CONCRETE DECK BEAMS) WHICH EXTENDS FROM WING WALL TO WING WALL. EXPOSE CONDUIT FROM BELOW THE EMBANKMENT ON THE OPPOSITE SIDE OF THE WING WALLS TO A DISTANCE SUFFICIENT TO REALIGN THE CONDUIT INTO THE PROPOSED LOCATION.

2. REMOVE A SUFFICIENT AMOUNT OF EXISTING CONDUIT FROM BELOW THE EMBANKMENT (TO BE PAID FOR AS REMOVE EXISTING UNDERGROUND CONDUIT) TO FACILITE CONDUIT RELOCATION.

3. THE STRUCTURAL PLANS INCLUDE OPENINGS TO ACCOMODATE THE PROPOSED 6" PVC CONDUITS THROUGH THE PROPOSED ABUTMENT AND PIER EXTENSIONS, AND STRUCTURAL STEEL TO SUPPORT AND PROTECT THE CONDUITS. REFER TO THE STRUCTURAL PLANS FOR DETAILS.

4. LAY NEW CONDUIT IN EMBANKMENT BEHIND THE PROPOSED RETAINING WALL AND FEED NEW CONDUIT THROUGH ABUTMENTS AND PIER TO REST WITHIN THE STRUCTURAL STEEL (TO BE PAID FOR AS UNDERGROUND CONDUIT, PVC, 6" DIA.). CONNECTIONS SHALL BE MADE TO THE EXISTING CONDUIT USING BENDS NOT TO EXCEED 48 INCHES IN RADIUS. THE TOTAL BENDS SHALL NOT EXCEED 180 DEGREES OF BEND. FOLLOW CITY CONDUIT TRENCH STANDARD DETAIL.

5. EXPANSION COUPLINGS SHALL BE INSTALLED NEAR EACH ABUTMENT. COST SHALL BE INCLUDED IN CONDUIT ATTACHED TO STRUCTURE, 6" DIA., PVC.

6. EXCEPT FOR EXPANSION COUPLINGS, PVC CONDUITS SHALL BE GLUED TOGETHER AT FACTORY BELL FITTINGS OR WITH CENTER STOP COULPLINGS WHEN FACTORY ENDS NEED TO BE CUT TO LENGTH, IN ORDER TO PREVENT SEPARATION, WHERE THE CONDUIT IS TO BE BURIED BELOW GROUND. WITHIN THE STRUCTURAL STEEL, CONDUITS ARE TO BE BUTT-FUSED IN A METHOD TO ALLOW PASSAGE THROUGH THE ABUTMENT AND PIER DURING CONSTRUCTION. BUTT-FUSION MUST BE PERFORMED BY TRAINED AND QUALIFIED PERSONNEL IN THAT PROCESS. (TO BE PAID FOR AS UNDERGROUND CONDUIT, PVC, 6" DIA.).

7. CONDUITS MUST BE MANDRELLED FROM MANHOLE TO MANHOLE WITH A FLEXIBLE MANDRELL NO SMALLER THAN 1/2-INCH LESS THAN THE INNER DIAMETER OF THE CONDUIT (INCLUDED IN THE COST OF THE UNDERGROUND CONDUIT, PVC, 6" DIA. AND CONDUIT ATTACHED TO STRUCTURE, 6" DIA., PVC).

8. A #12 COPPER MARKER CABLE AND A MULE TAPE MUST BE PULLED INTO AND LEFT IN EACH DUCT FROM MANHOLE TO MANHOLE AFTER MANDRELLING.

9. THE CONTRACTOR SHALL COORIDNATE WITH THE ENGINEER TO PROCURE THE MATERIALS (CONDUIT, COUPLINGS, MARKER CABLE AND MULE TAPE) FROM THE CITY OF NAPERVILLE, DEPARTMENT OF UTILITIES ELECTRIC. THE MATERIALS SHALL BE PICKED UP AND TRANSPORTED TO THE SITE BY THE CONTRACTOR.

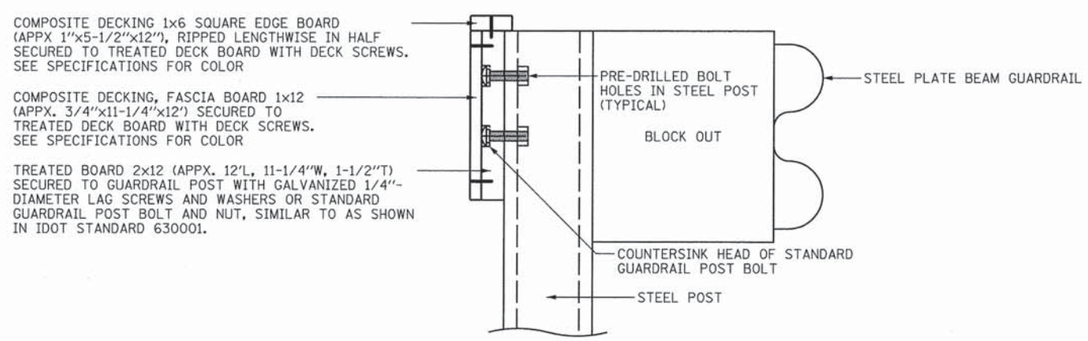

PEDESTRIAN RUB RAIL DETAIL

FILE NAME = L:\Naperville\15238-01_Washington Ph2\Draw\CADD_Sheets\sht-roadway_details_01.dgn

CMT
License No. 184-000613 © Copyright CMT, Inc.

USER NAME = Peter Ross	DESIGNED - PFR	REVISED -	
	DRAWN - PFR	REVISED -	
PLOT SCALE = 20.0000 ' / in.	CHECKED - PFR	REVISED -	
PLOT DATE = 1/12/2016 1:58:56 PM	DATE - 12/7/2015	REVISED -	

STATE OF ILLINOIS
DEPARTMENT OF TRANSPORTATION

ROADWAY DETAILS
WASHINGTON STREET

SCALE: | SHEET 1 OF 10 SHEETS | STA. TO STA.

F.A.U. RTE.	SECTION	COUNTY	TOTAL SHEETS	SHEET NO.
2552	14-00161-00-BR	WILL	86	30

CONTRACT NO. 61C38

ILLINOIS FED. AID PROJECT DPC-M-4003(356)

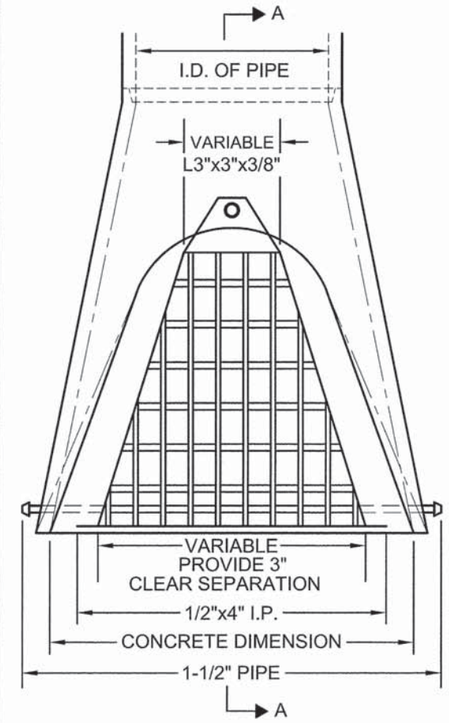

NOTES:

1. STRUCTURAL STEEL SHAPES AND PLATES SHALL BE IN ACCORDANCE WITH ARTICLE **1006.04** OF THE STANDARD SPECIFICATIONS FOR ROAD AND BRIDGE CONSTRUCTION.
2. GALVANIZED STEEL PIPE SHALL BE IN ACCORDANCE WITH ARTICLE **1006.27(b)** OF THE STANDARD SPECIFICATIONS.
3. BOLTS, NUTS AND WASHERS SHALL BE IN ACCORDANCE WITH ARTICLE **1006.27(f)** OF THE STANDARD SPECIFICATIONS.
4. ALL FABRICATION SHALL BE COMPLETED AND ASSEMBLED BEFORE GALVANIZING.
5. THE CORED HOLES IN THE PRECAST CONCRETE FLARED END SECTIONS SHALL BE TO THE DIAMETERS NOTED. IF CONE-OUT ON THE OTHER END OF THE HOLE OCCURS, THE HOLE SHALL BE FILLED WITH GROUT TO CORRECT DIAMETER OF THE HOLE.
6. ALL FLARED END SECTIONS FOR PIPE GREATER THAN 12" IN DIAMETER SHALL BE PROVIDED WITH A GRATE.
7. GRATES SHALL BE CONSTRUCTED TO PROVIDE 8" VERT. X 3" HORZ. CLEAR SEPARATION BETWEEN BARS.

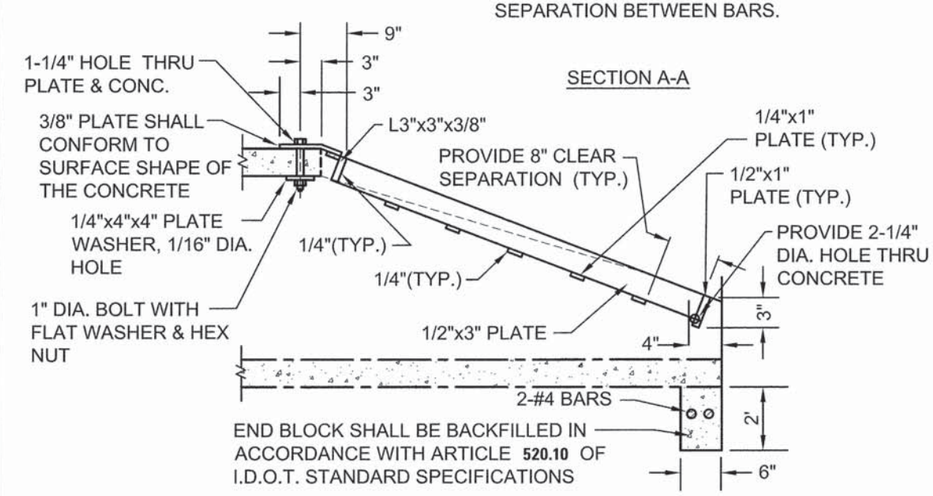

City of Naperville
STANDARD DETAIL

GRATING FOR CONCRETE FLARED END SECTION

REVISED: 01/01/2013 | SHEET 1 OF 1

STORM 22

290.22

FILE NAME = L:\Naperville\15238-01_WashingtonPh2\Dr-aw\CADD_Sheets\sht-roadway_details_02.dgn

CMT
License No. 184-000613 ©Copyright CMT, Inc.

USER NAME = Peter Ross	DESIGNED - PFR	REVISED -	
	DRAWN - PFR	REVISED -	
PLOT SCALE = 20.0000 ' / in.	CHECKED - PFR	REVISED -	
PLOT DATE = 12/12/2015 11:13:14 AM	DATE - 12/7/2015	REVISED -	

STATE OF ILLINOIS
DEPARTMENT OF TRANSPORTATION

ROADWAY DETAILS
WASHINGTON STREET

SCALE: | SHEET 2 OF 10 SHEETS | STA. TO STA.

F.A.U. RTE.	SECTION	COUNTY	TOTAL SHEETS	SHEET NO.
2552	14-00161-00-BR	WILL	86	31

CONTRACT NO. 61C38

ILLINOIS FED. AID PROJECT DPC-M-4003(356)

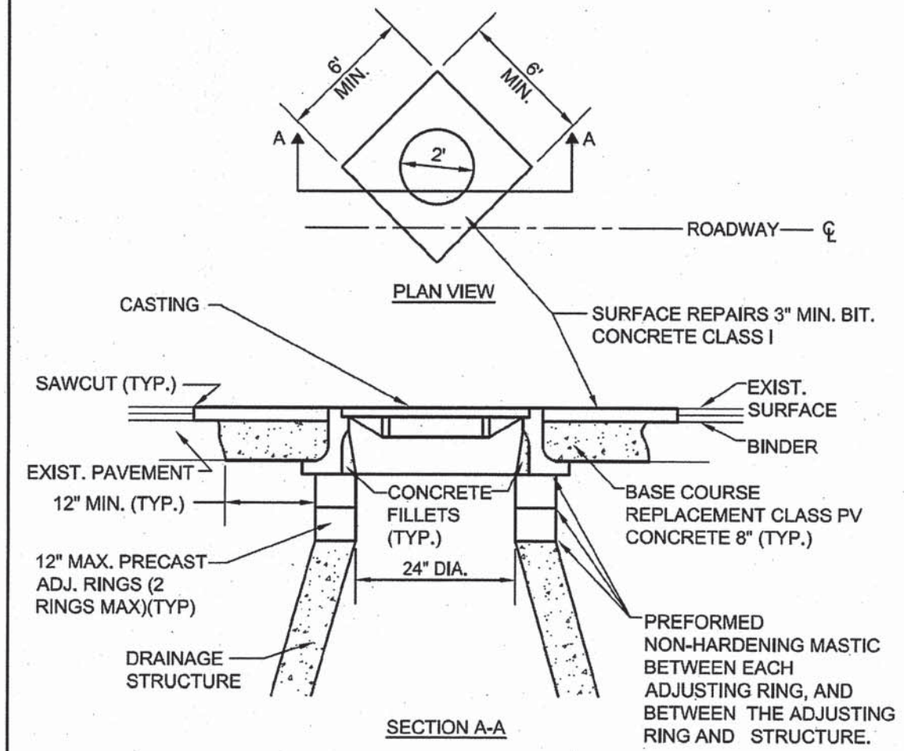

NOTES:

1. ADJUSTMENTS SHALL BE PROTECTED BY A BARRICADE WITH TWO (2) LIGHTS, OR A 1" THICK STEEL PLATE SHALL BE PROVIDED AND MAINTAINED BY THE CONTRACTOR AT LOCATIONS WHERE ADJUSTMENTS ARE LOCATED IN TRAVEL LANES UNTIL THE SURFACE RESTORATION IS COMPLETE. THE PLATE SHALL BE PROTECTED FROM SLIDING AND SHALL HAVE BITUMINOUS RAMPS AS REQUIRED.

2. WHEN ADJUSTMENTS RAISE A CASTING ABOVE THE ELEVATION OF THE EXISTING PAVEMENT SURFACE, A BITUMINOUS MIXTURE SHALL BE PLACED AROUND THE CASTING, TRANSITIONED A DISTANCE OF 1' HORIZONTAL FOR EACH INCH OF VERTICAL DISTANCE ABOVE THE EXISTING PAVEMENT. SUCH RAMPS SHALL BE MAINTAINED BY THE CONTRACTOR UNTIL THE COMPLETION OF THE SURFACE RESTORATION.

City of Naperville STANDARD DETAIL	CASTING ADJUSTMENTS FOR STRUCTURES IN PAVED AREAS		STORM 15
	REVISED: 01/01/2013	SHEET 1 OF 1	290.15

FILE NAME = L:\Naperville\15239-01_Washington\Ph2\Draw\CADD_Sheets\sht-roadway_details_03.dgn

CMT

USER NAME = Peter Ross	DESIGNED - PFR	REVISED -	
	DRAWN - PFR	REVISED -	
PLOT SCALE = 40.0000 ' / in.	CHECKED - PFR	REVISED -	
PLOT DATE = 1/13/2016 10:49:16 AM	DATE - 12/7/2015	REVISED -	

STATE OF ILLINOIS
DEPARTMENT OF TRANSPORTATION

ROADWAY DETAILS
WASHINGTON STREET

SCALE: | SHEET 3 OF 10 SHEETS | STA. TO STA.

F.A.U. RTE.	SECTION	COUNTY	TOTAL SHEETS	SHEET NO.
2552	14-00161-00-BR	WILL	86	32
		CONTRACT NO. 61C38		
	ILLINOIS FED. AID PROJECT DPC-M-4003(356)			

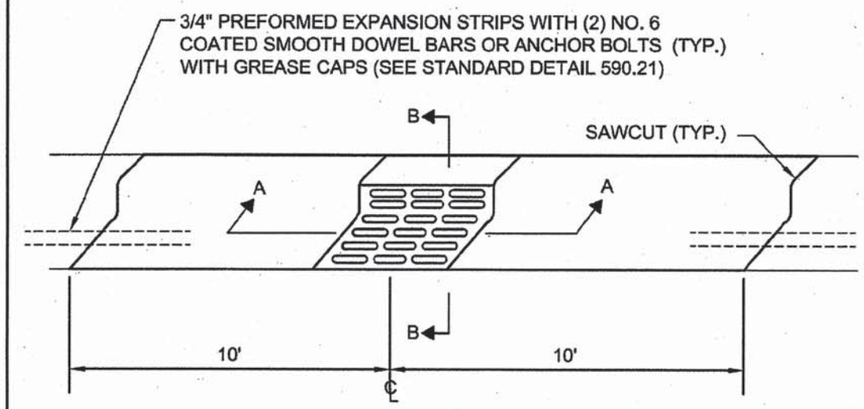

NOTE:

REMOVE & REPLACE CURB A MINIMUM OF 10' EITHER SIDE OF STRUCTURE OR TO NEAREST EXPANSION JOINT (WHICHEVER IS CLOSEST)

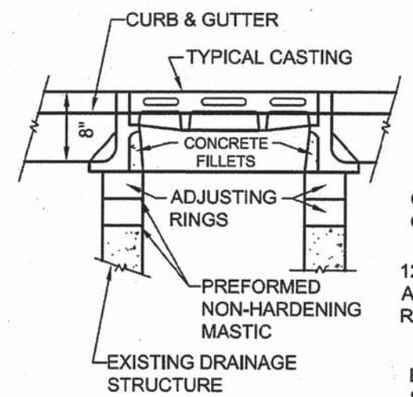

SECTION A-A

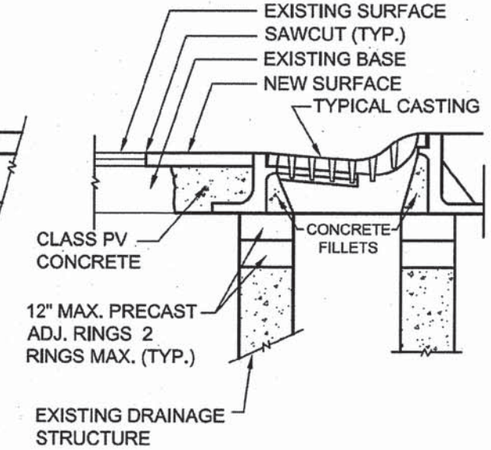

SECTION B-B

City of Naperville
STANDARD DETAIL

CASTING ADJUSTMENTS FOR STRUCTURES WITHIN THE CURB LINE

REVISED: 01/01/2013 | SHEET 1 OF 1

STORM 16

290.16

FILE NAME = L:\Naperville\15238-01_WashingtonPh2\Dwg\CADD_Sheets\sht-roadway_details_04.dgn

CMT

USER NAME = Peter Ross	DESIGNED - PFR	REVISED -	
	DRAWN - PFR	REVISED -	
PLOT SCALE = 40.0000 ' / in.	CHECKED - PFR	REVISED -	
PLOT DATE = 1/13/2016 10:49:21 AM	DATE - 12/7/2015	REVISED -	

STATE OF ILLINOIS
DEPARTMENT OF TRANSPORTATION

ROADWAY DETAILS
WASHINGTON STREET

SCALE: | SHEET 4 OF 10 SHEETS | STA. TO STA.

F.A.U. RTE.	SECTION	COUNTY	TOTAL SHEETS	SHEET NO.
2552	14-00161-00-BR	WILL	86	33

CONTRACT NO. 61C38

ILLINOIS FED. AID PROJECT DPC-M-4003(356)

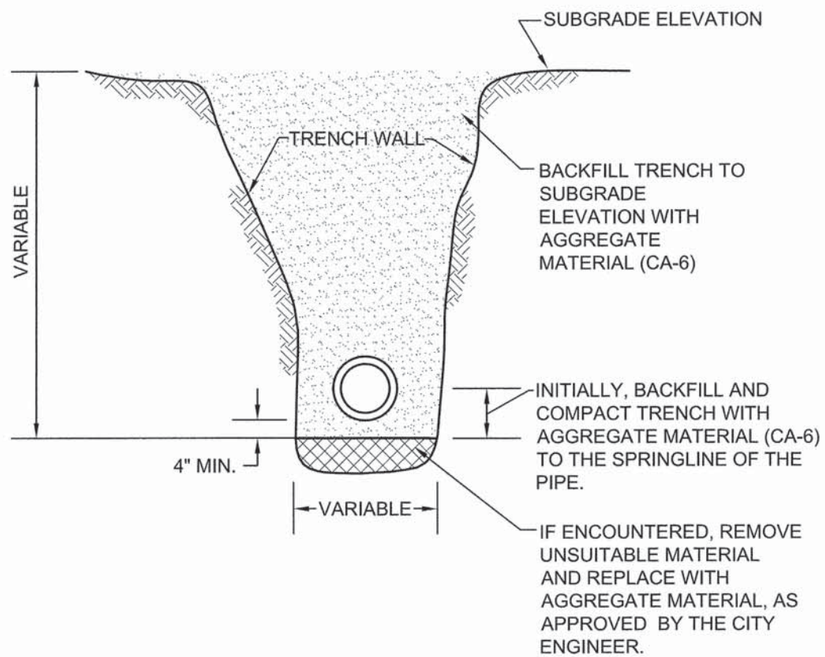

NOTES:

1. TRENCH BACKFILL MATERIAL SHALL BE COMPACTED IN ACCORDANCE WITH SECTION 550.07 OF THE IDOT STANDARD SPECIFICATIONS FOR ROAD AND BRIDGE CONSTRUCTION.
2. THIS DETAIL SHALL BE USED WHEREVER THE TRENCH IS MADE IN THE PROPOSED ROADWAY SUBGRADE, AND WHEREVER THE INNER EDGE OF THE TRENCH IS CLOSER THAN 2' TO THE EDGE OF THE PROPOSED PAVEMENT, CURB AND GUTTER, AND SIDEWALK.

City of Naperville STANDARD DETAIL	STORM SEWER TRENCH SECTION IN PAVED AREAS	STORM 20
	REVISED: 01/01/2013 — SHEET 1 OF 1	290.20

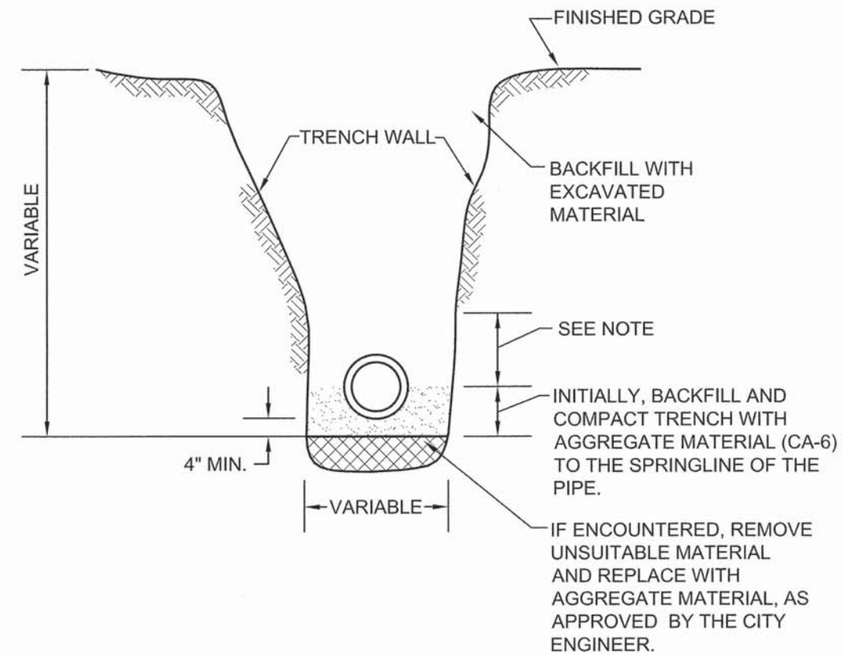

NOTE:

FOR PVC AND HDPE PIPE, BACKFILL WITH AGGREGATE MATERIAL (CA-6) TO 6" ABOVE THE TOP OF PIPE.

City of Naperville STANDARD DETAIL	STORM SEWER TRENCH SECTION IN NON-PAVED AREAS	STORM 21
	REVISED: 01/01/2013 — SHEET 1 OF 1	290.21

FILE NAME = L:\Naperville\15238-01_Washington\Ph2\Draw\CADD_Sheets\sht-roadway_details_05.dgn

CMT

USER NAME = Peter Ross	DESIGNED - PFR	REVISED -	STATE OF ILLINOIS DEPARTMENT OF TRANSPORTATION
	DRAWN - PFR	REVISED -	
PLOT SCALE = 20.0009 ' / in.	CHECKED - PFR	REVISED -	
PLOT DATE = 12/12/2015 11:13:50 AM	DATE - 12/7/2015	REVISED -	

ROADWAY DETAILS
WASHINGTON STREET

SCALE: | SHEET 5 OF 10 SHEETS | STA. | TO STA.

F.A.U. RTE.	SECTION	COUNTY	TOTAL SHEETS	SHEET NO.
2552	14-00161-00-BR	WILL	86	34

CONTRACT NO. 61C38

ILLINOIS FED. AID PROJECT DPC-M-4003(356)

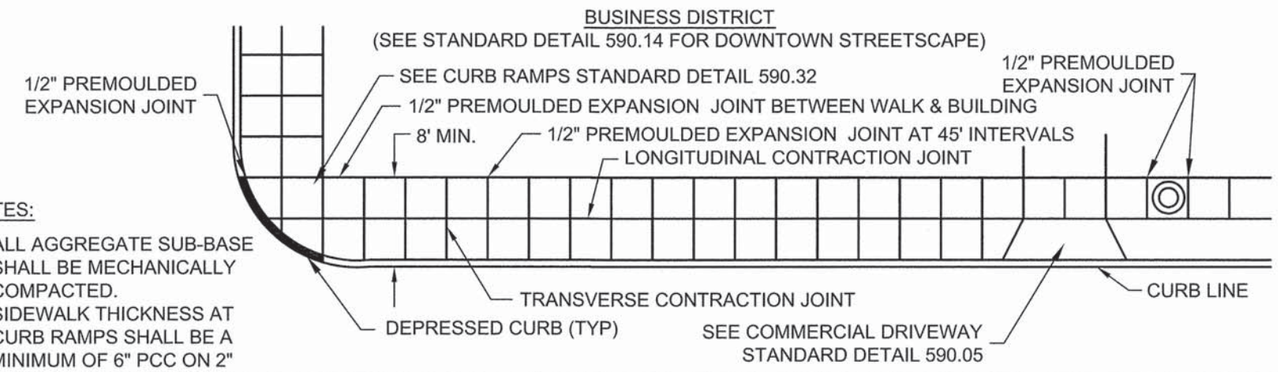

NOTES:

1. ALL AGGREGATE SUB-BASE SHALL BE MECHANICALLY COMPACTED.
2. SIDEWALK THICKNESS AT CURB RAMPS SHALL BE A MINIMUM OF 6" PCC ON 2" AGGREGATE SUB BASE.
3. SIDEWALK CONSTRUCTION SHALL FOLLOW APPLICABLE IDOT STANDARDS.
4. SIDEWALKS SHALL FOLLOW CURRENT ADA GUIDELINES.

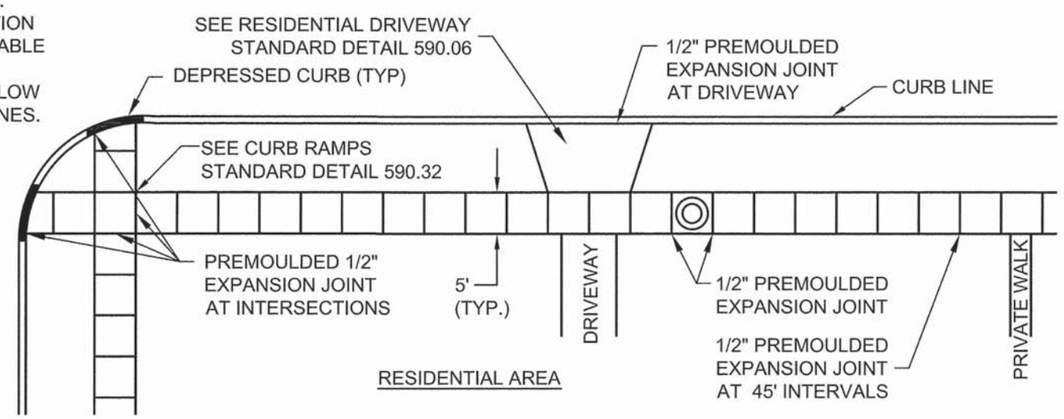

City of Naperville
STANDARD DETAIL

SIDEWALK CONSTRUCTION

REVISED: 01/01/2013

SHEET 1 OF 1

PAVEMENT 31

590.31

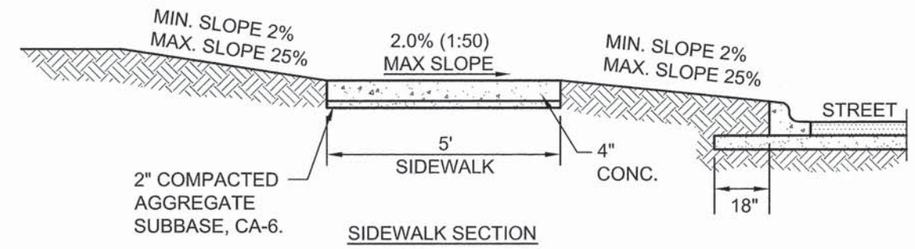

SIDEWALK SECTION

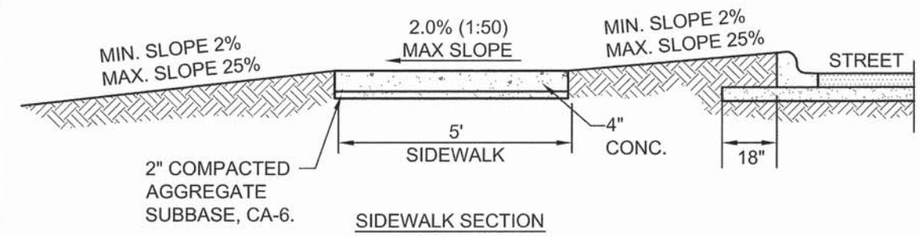

SIDEWALK SECTION

NOTES:

1. CONCRETE SHALL BE IDOT CLASS SI.
2. MINIMUM SIDEWALK THICKNESS SHALL BE 4".
3. SIDEWALK THICKNESS ACROSS DRIVEWAYS SHALL BE AT A MINIMUM 6" FOR RESIDENTIAL DRIVEWAYS AND 8" FOR COMMERCIAL DRIVEWAYS.
4. MAXIMUM LONGITUDINAL SLOPE SHALL NOT EXCEED 5% (20:1). FOR ANY SLOPE IN EXCESS OF 5%, ALL REQUIREMENTS OF THE ILLINOIS ACCESSIBILITY CODE (LATEST EDITION) SHALL BE MET.
5. MINIMUM TRANSVERSE SLOPE SHALL BE 1.0% (1:100). MAXIMUM TRANSVERSE SLOPE SHALL BE 2.0% (1:50).
6. A MINIMUM 2" AGGREGATE SUBBASE (CA-6) SHALL BE PROVIDED. (4" THROUGH COMMERCIAL DRIVEWAYS).
7. AGGREGATE SUBBASE SHALL BE MECHANICALLY COMPACTED.
8. ALL SIDEWALKS SHALL BE PROMPTLY BACKFILLED AND PROTECTED FROM DAMAGE.
9. SIDEWALK CONSTRUCTION SHALL FOLLOW APPLICABLE IDOT STANDARDS.
10. SIDEWALKS SHALL FOLLOW CURRENT ADA GUIDELINES.

City of Naperville
STANDARD DETAIL

SIDEWALK

REVISED: 01/01/2013

SHEET 1 OF 1

PAVEMENT 30

590.30

FILE NAME = L:\Naperville\15230-01_Washington\Ph2\Draw\CADD_Sheets\sht-roadway_details_06.dgn

CMT

USER NAME = Peter Ross	DESIGNED - PFR	REVISED -	STATE OF ILLINOIS DEPARTMENT OF TRANSPORTATION
	DRAWN - PFR	REVISED -	
PLOT SCALE = 20.0000 ' / in.	CHECKED - PFR	REVISED -	
PLOT DATE = 12/12/2015 11:14:03 AM	DATE - 12/7/2015	REVISED -	

ROADWAY DETAILS
WASHINGTON STREET

SCALE: | SHEET 6 OF 10 SHEETS | STA. | TO STA.

F.A.U. RTE.	SECTION	COUNTY	TOTAL SHEETS	SHEET NO.
2552	14-00161-00-BR	WILL	86	35

CONTRACT NO. 61C38

ILLINOIS FED. AID PROJECT DPC-M-4003(356)

UNDERGROUND ELECTRIC CONDUIT

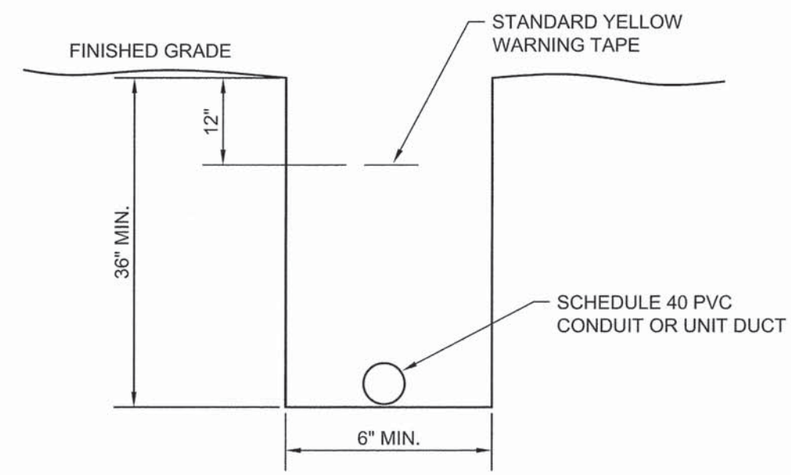

City of Naperville
STANDARD DETAIL

TYPICAL TRENCH DETAIL

REVISED: 01/01/2013 | SHEET 1 OF 1

LIGHTING 31

690.31

FILE NAME = L:\Naperville\15238-01_Washington Ph2\Dwg\CADD_Sheets\sht-roadway_details_07.dgn

CMT
License No. 184-000613 ©Copyright CMT, Inc.

USER NAME = Peter Ross	DESIGNED - PFR	REVISED -	
	DRAWN - PFR	REVISED -	
PLOT SCALE = 20.0009 ' / in.	CHECKED - PFR	REVISED -	
PLOT DATE = 12/12/2015 11:14:18 AM	DATE - 12/7/2015	REVISED -	

STATE OF ILLINOIS
DEPARTMENT OF TRANSPORTATION

ROADWAY DETAILS
WASHINGTON STREET

SCALE: | SHEET 7 OF 10 SHEETS | STA. | TO STA.

F.A.U. RTE.	SECTION	COUNTY	TOTAL SHEETS	SHEET NO.
2552	14-00161-00-BR	WILL	86	36

CONTRACT NO. 61C38

ILLINOIS FED. AID PROJECT DPC-M-4003(356)

BENCH MARK:

Cut square "□" NW corner of the bridge. Elev = 650.14
Cut square "□" SE corner of the bridge. Elev = 651.20

EXISTING STRUCTURE:

SN 099-3326 is a two span simply supported, precast prestressed box beam structure with a 35°0' right forward skew. The bridge is approximately 108'-10¼" long, back-to-back of the abutmets, and 56'-0" wide, out-to-out deck.

PROPOSED IMPROVEMENTS:

Existing structure shall be widened to 72'-0", out-to-out deck, to accomodate sidewalks along each side of the bridge. Four beams shall be replaced, and an extra eight beams shall be added, and spread footings of pier and abutments shall be widened along with addition of soldier pile retaining walls. Concrete wearing surface shall be utilized.

SALVAGE

Exisiting substructure and twenty-four PPC deck beams.

LEGEND

Gas line — G
Aerial Line — A
Telephone cable — T
Storm sewer
Water line — W
Electric line — E
Soil Boring

BORING LOG

SB01	99+64.68, 65.02' RT
SB02	100+57.72, 19.67' LT
RWB02	100+74.41, 54.06' LT
RWB03	98+86.84, 58.56' RT
RWB04	99+05.68, 18.11' LT

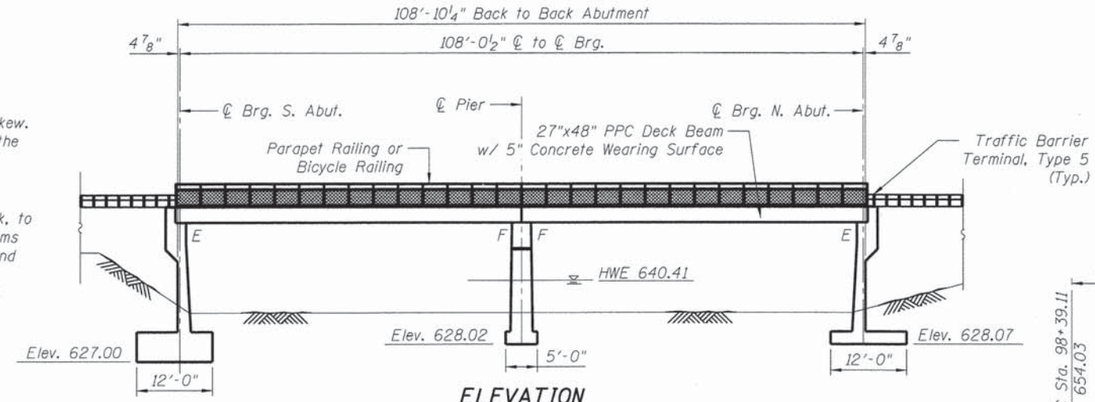

ELEVATION

DESIGN SPECIFICATIONS

2002 AASHTO Standard Specifications for Highway Bridges

DESIGN STRESSES

FIELD UNITS

f'c = 3,500 psi
fy = 60,000 psi (Reinforcement)
f'c = 5,000 psi (Concrete Wearing Surface)

PRECAST PRESTRESSED UNITS

f'c = 6,000 psi
f'ci = 5,000 psi
fpu = 270,000 psi (½" ϕ low lax strands)

SEISMIC DATA

Seismic Performance Zone (SPZ) = 1
Design Spectral Acceleration at 1.0 sec. (S_{D1}) = 0.076g
Design Spectral Acceleration at 0.2 sec. (S_{DS}) = 0.126g
Soil Site Class = D

LOADING HS20-44

Future wearing surface shall not be allowed.

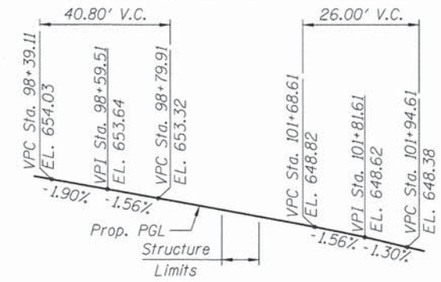

PROFILE GRADE

(along ℄ Roadway)

WEST BRANCH DUPAGE RIVER
REBUILT 201_ BY
CITY OF NAPERVILLE
SECTION 14-00161-00-BR
F.A. RT. 2252 STA. 100+00
STR. NO. 099-3326 LOADING HS20

NAME PLATE

See Std. 515001

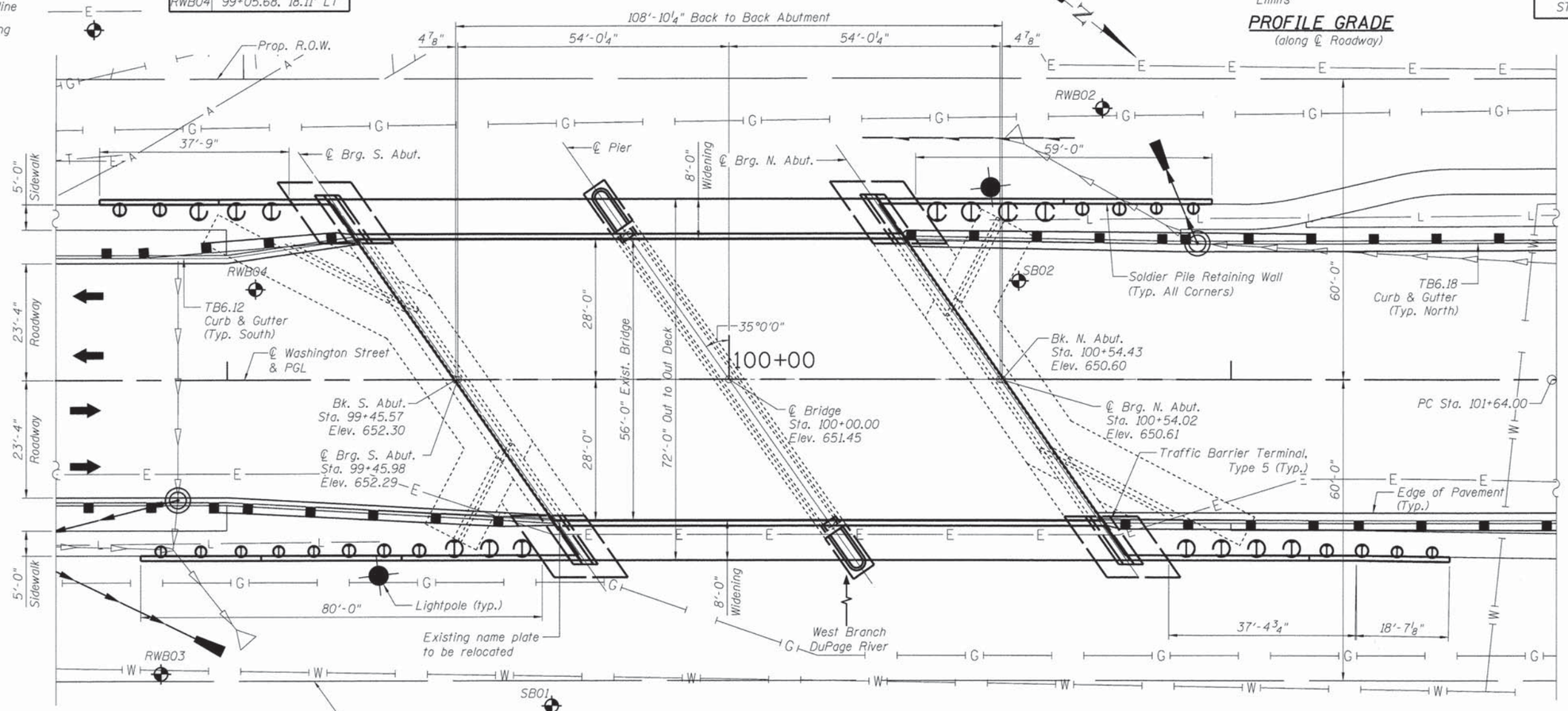

PLAN

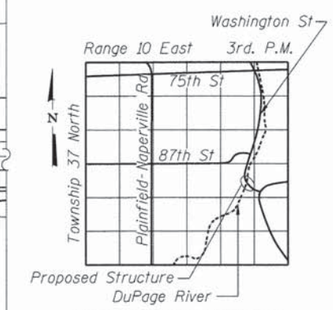

LOCATION SKETCH

LICENSED STRUCTURAL ENGINEER
PRABHU ANANTHAN
081-006743
STATE OF ILLINOIS

Exp. Date: 11/30/2016

"I certify that to the best of my knowledge, information and belief, this design is structurally adequate for the design loading shown on the plans. The design is an economical one for the style of the structure and complies with the requirements of the "2002 AASHTO Standard Specifications for Highway Bridges."

FILE NAME = L:\Naperville\152318-01_WashingtonPh2\Draw\CADD_Sheets\S-01 GPE.dgn

CMT
License No. 184-000613
©Copyright CMT, Inc.

USER NAME = Peter Ross	DESIGNED - PA	REVISED -
	DRAWN - PA	REVISED -
PLOT SCALE = 12.0005 ' / in.	CHECKED - PA	REVISED -
PLOT DATE = 12/12/2015 11:09:23 AM	DATE - 12/7/2015	REVISED -

STATE OF ILLINOIS
DEPARTMENT OF TRANSPORTATION

GENERAL PLAN
WASHINGTON STREET

SCALE: | SHEET 1 OF 28 SHEETS | STA. | TO STA.

F.A.U. RTE.	SECTION	COUNTY	TOTAL SHEETS	SHEET NO.
2552	14-00161-00-BR	WILL	86	37

CONTRACT NO. 61C38

ILLINOIS FED. AID PROJECT DPC-M-4003(356)

GENERAL NOTES

1. Calculated weight of Structural Steel = 7,010 lbs.
2. All structural steel shall conform to the requirements of AASHTO M 270 Grade 36, and shall be galvanized according to AASHTO M 111.
3. Reinforcement bars designated (E) shall be epoxy coated.
4. Layout of the slope protection system may be varied to suit ground conditions in the field as directed by the Engineer.
5. Elevations from existing plans have been revised according to NAVD 88 datum. Plan dimensions and details relative to existing plans are subject to nominal construction variations. The Contractor shall field verify existing dimensions and details affecting new construction and make necessary approved adjustments prior to construction or ordering of materials. Such variations shall not be cause for additional compensation for a change in scope of the work, however, the Contractor shall be paid for the quantity actually furnished at the unit price bid for the work.

INDEX OF SHEETS

TOTAL BILL OF MATERIAL

	ITEM	DESCRIPTION	UNIT	SUPER	SUB	TOTAL
	28100107	Stone Riprap, Class A4	Sq Yd		82	82
	28200200	Filter Fabric	Sq Yd		82	82
	50102400	Concrete Removal	Cu Yd		208.4	208.4
	50104000	Bridge Rail Removal	Foot	219		219
	50200100	Structure Excavation	Cu Yd		329.8	329.8
	50200300	Cofferdam Excavation	Cu Yd		124.2	124.2
	50201101	Cofferdam (Type 1) (Location - 1)	Each		1	1
	50201102	Cofferdam (Type 1) (Location - 2)	Each		1	1
	50201103	Cofferdam (Type 1) (Location - 3)	Each		1	1
	50300225	Concrete Structures	Cu Yd		324.8	324.8
	50300255	Concrete Superstructure	Cu Yd	62.1		62.1
	50300260	Bridge Deck Grooving	Sq Yd	657		657
	50300300	Protective Coat	Sq Yd	985		985
	50400505	Precast Prestressed Concrete Deck Beams (27" Depth)	Sq Ft	2,625		2,625
	50500105	Furnishing and Erecting Structural Steel	L Sum	1		1
	50500505	Stud Shear Connectors	Each		493	493
	50800205	Reinforcement Bars, Epoxy Coated	Pound	17,780	36,330	54,110
	50800515	Bar Splicers	Each	110		110
	50901720	Bicycle Railing	Foot	452		452
	50901750	Parapet Railing	Foot	219		219
	52000110	Preformed Joint Strip Seal	Foot	176		176
	58700300	Concrete Sealer	Sq Ft		1,697	1,697
	59000200	Epoxy Crack Injection	Foot		113	113
	59100100	Geocomposite Wall Drain	Sq Yd		310	310
**	X0320047	Removal of Existing Precast Prestressed Concrete Deck Beams	Sq Ft	875		875
*	X0324455	Drilling and Setting Soldier Piles (In Soil)	Cu Ft		3,633	3,633
*	X0324456	Drilling and Setting Soldier Piles (In Rock)	Cu Ft		796	796
*	X5030305	Concrete Wearing Surface, 5"	Sq Yd	681		681
*	X5860110	Granular Backfill For Structures	Cu Yd		198	198
**	Z0004560	Bridge Wearing Surface Removal	Sq Yd	5,255		5,255
*	Z0007118	Untreated Timber Lagging	Sq Ft		1,680	1,680
*	Z0012754	Structural Repair Of Concrete (Depth Equal To Or Less Than 5 Inches)	Sq Ft		36	36
**	Z0018900	Drill and Grout Dowel Bars	Each		552	552
*	Z0026404	Furnishing Soldier Piles (W Section)	Foot		814	814
*	Z0046304	Pipe Underdrains for Structures, 4"	Foot		239	239
**	Z0049790	Relocating Name Plates	Each	1		1

* Guide Bridge Special Provision Item
** Special Provision Item

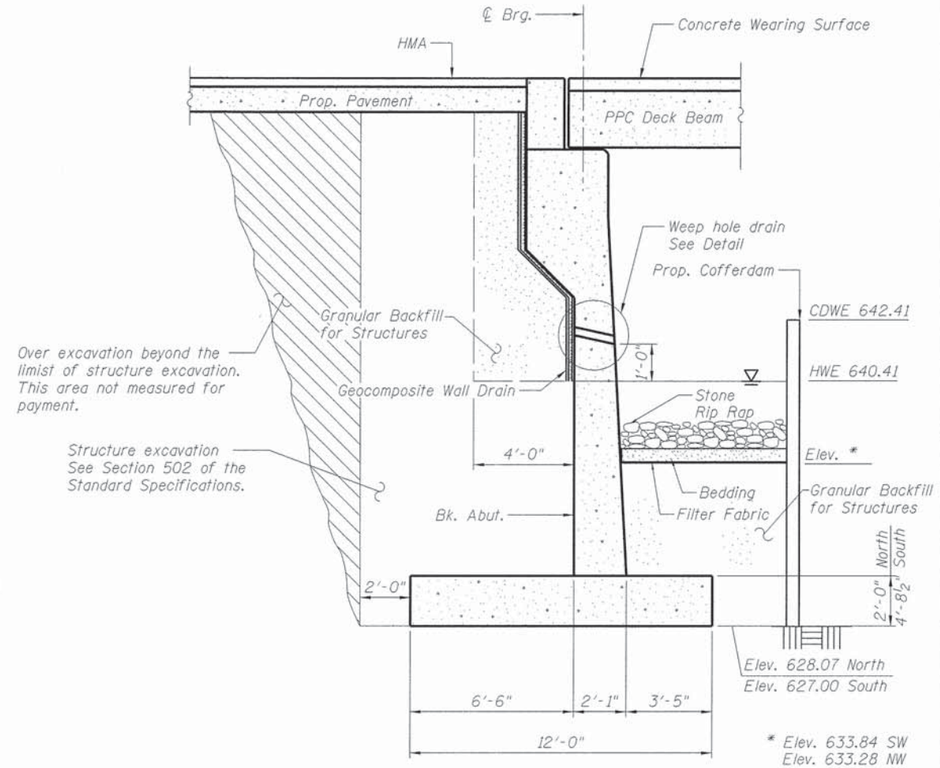

SECTION THRU ABUTMENT

* Elev. 633.84 SW
Elev. 633.28 NW
Elev. 632.54 SE
Elev. 632.47 NE

WATERWAY INFORMATION

Drainage Area = 123 Sq. Mi.

Existing Overtopping Elev. 646.41 @ Sta. 104+00
Proposed Overtopping Elev. 646.41 @ Sta. 104+00

Flood	Freq. Yr.	Q C.F.S.	Opening-Sq. Ft. Exist.	Opening-Sq. Ft. Prop.	Natural H.W.E.	Head - Ft. Exist.	Head - Ft. Prop.	Headwater El. Exist.	Headwater El. Prop.
	10	3510	746	746	640.48	0	0	640.42	640.43
Design	50	4920	894	894	640.41	0	0	641.29	641.31
Base	100	5600	936	936	641.80	0	0	641.68	641.70
Scour Design Check									
Overtop Existing	N/A	N/A	-	-	-	-	-	-	-
Overtop Proposed	N/A	N/A	-	-	-	-	-	-	-
Max. Calc.	500	7500	1033.03	643	643	0	0	642.54	642.57

10 Year Velocity Through Existing Bridge = 8.2 ft/s
10 Year Velocity Through Proposed Bridge = 8.1 ft/s

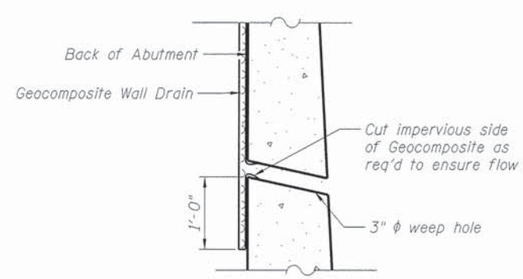

WEEP HOLE DRAIN DETAIL

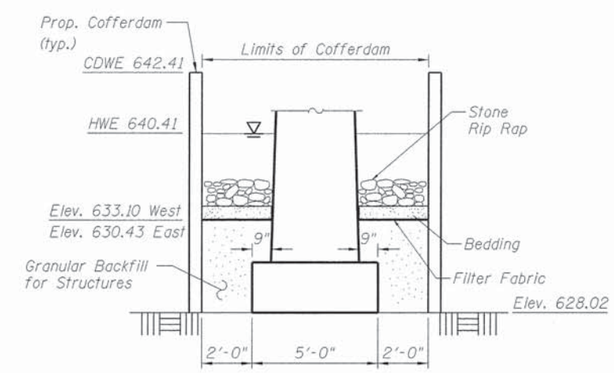

SECTION THRU PIER

CMT (License No. 184-000613)	USER NAME = Peter Ross	DESIGNED - PA	REVISED -
		DRAWN - DH	REVISED -
	PLOT SCALE = 1.0000 ' / in.	CHECKED - PA	REVISED -
	PLOT DATE = 12/12/2015 11:14:23 AM	DATE - 12/7/2015	REVISED -

STATE OF ILLINOIS
DEPARTMENT OF TRANSPORTATION

GENERAL NOTES & BILL OF MATERIAL
WASHINGTON STREET

SCALE: | SHEET 2 OF 28 SHEETS | STA. TO STA.

F.A.U. RTE.	SECTION	COUNTY	TOTAL SHEETS	SHEET NO.
2552	14-00161-00-BR	WILL	86	38

CONTRACT NO. 61C38
ILLINOIS FED. AID PROJECT DPC-M-4003(356)

FILE NAME = L:\Naperville\15238-01_WashingtonPh2\D-aw\CADD_Sheets\S-02 Gen Notes and BOM.dgn

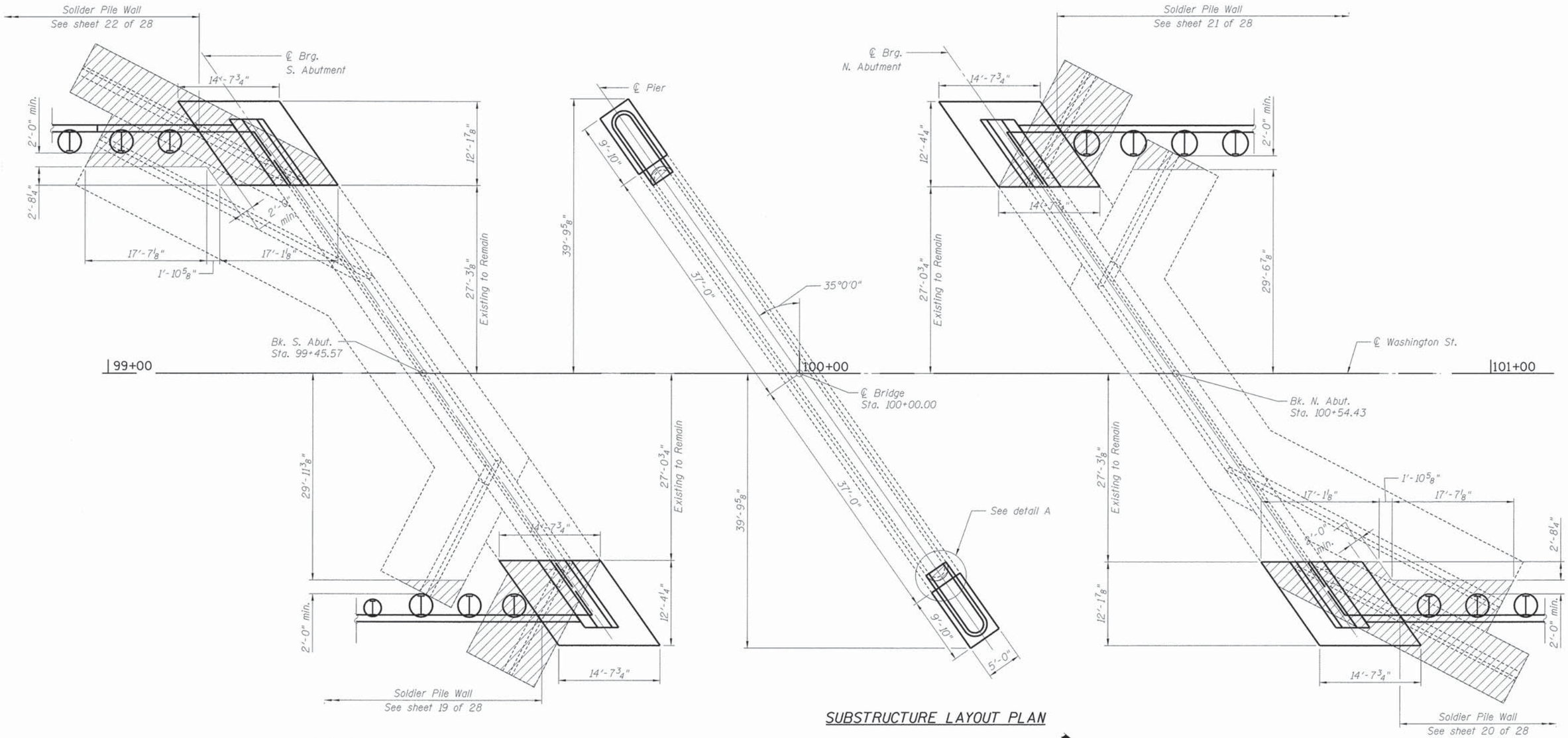

SUBSTRUCTURE LAYOUT PLAN

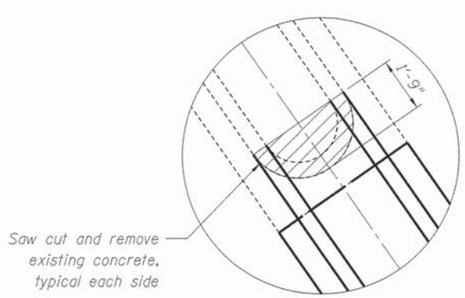

DETAIL A

LEGEND

Concrete Removal

FILE NAME = L:\Naperville\152381-01_WashingtonPh2\Drw\CADD_Sheets\S-83 Substructure Layout.dgn

CMT	USER NAME = Peter Ross	DESIGNED - PA	REVISED -
		DRAWN - DH	REVISED -
	PLOT SCALE = 7.2503 ' / in.	CHECKED - PA	REVISED -
	PLOT DATE = 12/12/2015 11:14:24 AM	DATE - 12/7/2015	REVISED -

STATE OF ILLINOIS
DEPARTMENT OF TRANSPORTATION

SUBSTRUCTURE LAYOUT
WASHINGTON STREET

SCALE: | SHEET 3 OF 28 SHEETS | STA. TO STA.

F.A.U. RTE.	SECTION	COUNTY	TOTAL SHEETS	SHEET NO.
2552	14-00161-00-BR	WILL	86	39

CONTRACT NO. 61C38

ILLINOIS FED. AID PROJECT DPC-M-4003(356)

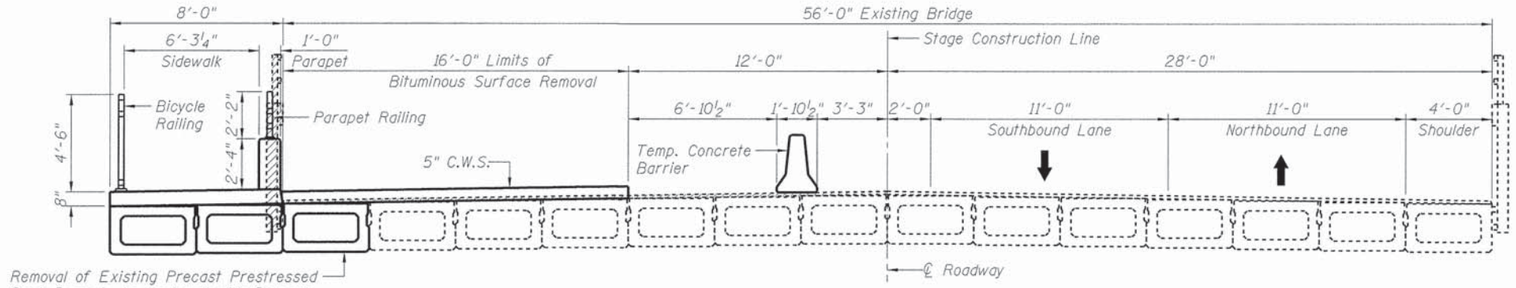

STAGE IA CONSTRUCTION

(Looking North)

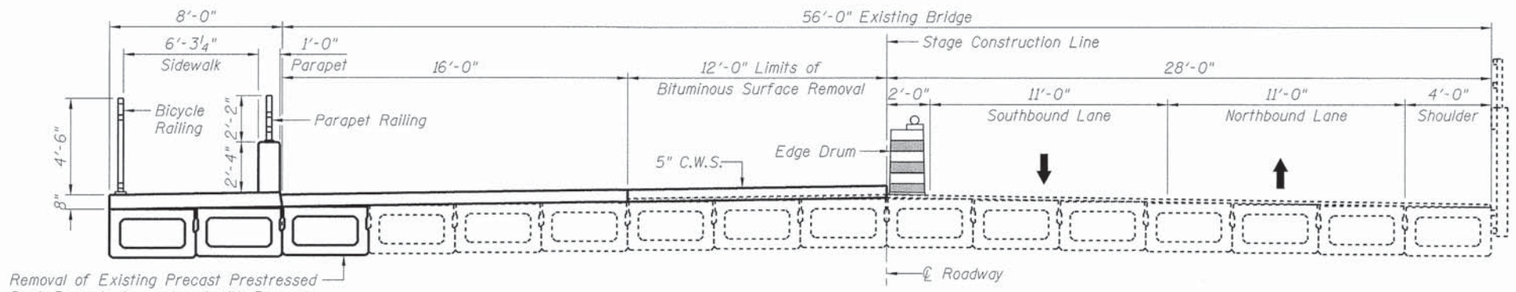

STAGE IB CONSTRUCTION

(Looking North)

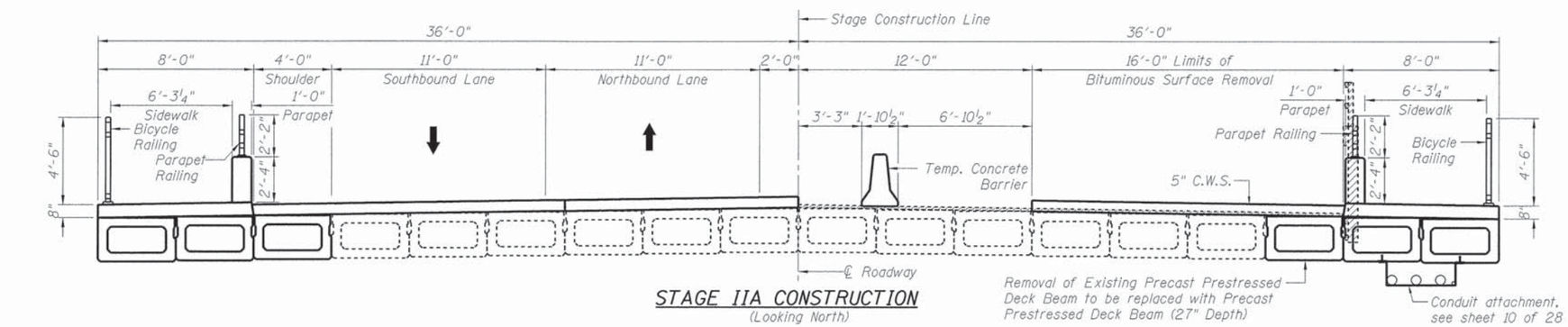

STAGE IIA CONSTRUCTION

(Looking North)

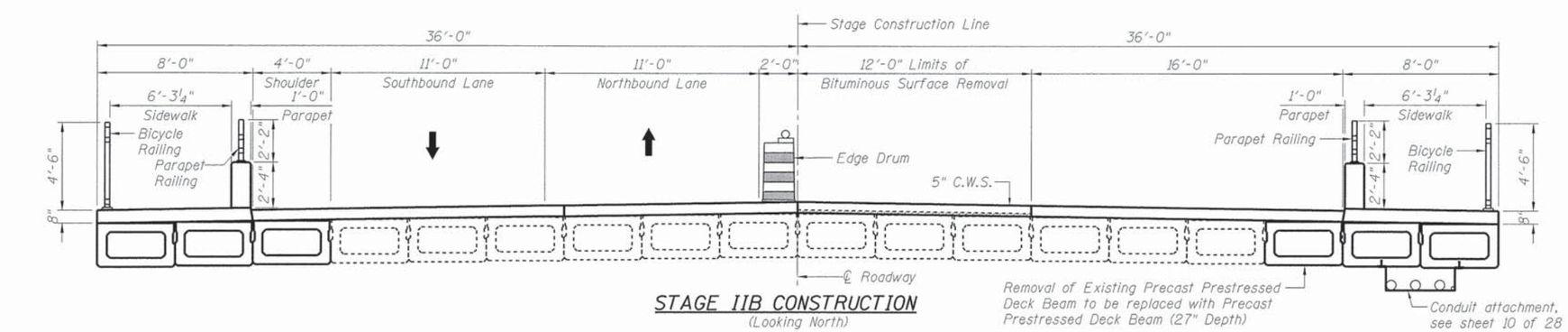

STAGE IIB CONSTRUCTION

(Looking North)

LEGEND

Existing Precast Prestressed Deck Beams (27" Depth) to remain

Proposed Precast Prestressed Deck Beams (27" Depth)

NOTES

1. Edge Drum barricade and Temporary Concrete Barrier are paid as roadway items.

FILE NAME = L:\Naperville\15238-01_Washington\Ph2\Dr-aw\CADD_Sheets\S-04 Staging Plan.dgn

CMT
License No. 184-000613 ©Copyright CMT, Inc.

USER NAME = Peter Ross	DESIGNED - PA	REVISED -	
	DRAWN - DH	REVISED -	
PLOT SCALE = 3.5002 ' / in.	CHECKED - PA	REVISED -	
PLOT DATE = 12/12/2015 11:14:25 AM	DATE - 12/7/2015	REVISED -	

STATE OF ILLINOIS
DEPARTMENT OF TRANSPORTATION

STAGING DETAILS
WASHINGTON STREET

SCALE: | SHEET 4 OF 28 SHEETS | STA. TO STA.

F.A.U. RTE.	SECTION	COUNTY	TOTAL SHEETS	SHEET NO.
2552	14-00161-00-BR	WILL	86	40
		CONTRACT NO. 61C38		
	ILLINOIS	FED. AID PROJECT DPC-M-4003(356)		

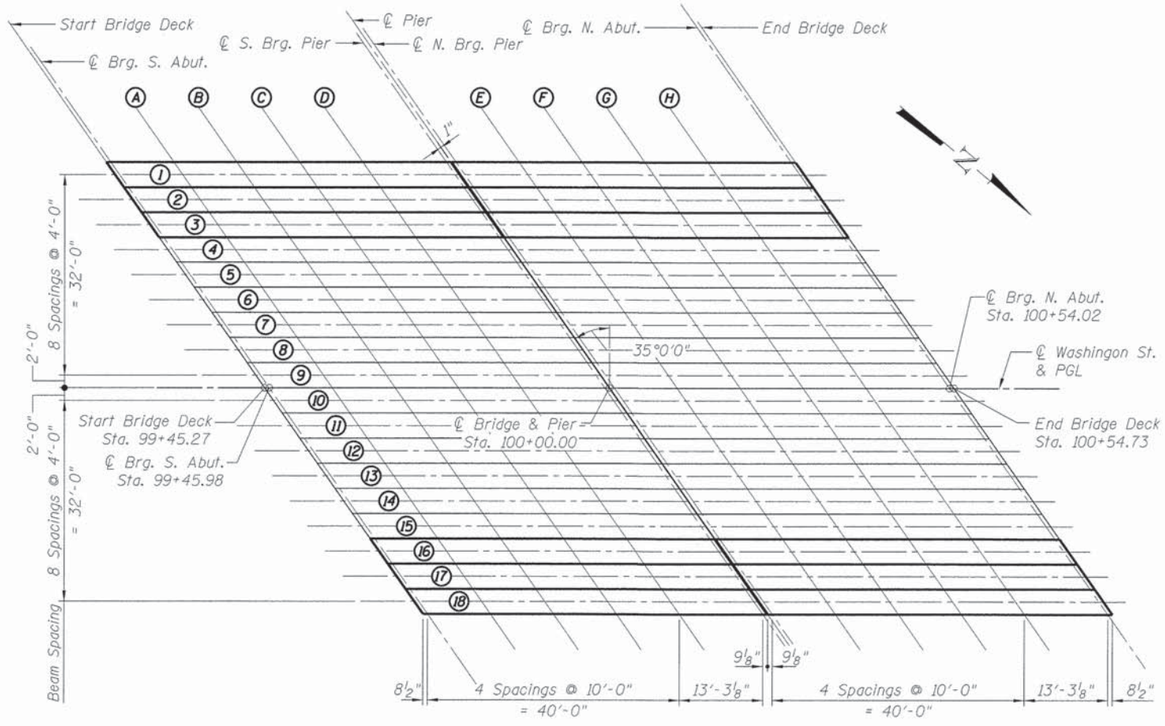

PLAN

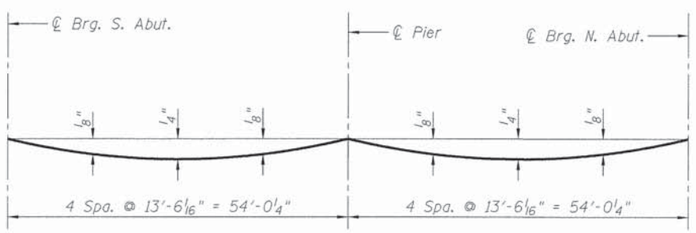

DEAD LOAD DEFLECTION DIAGRAM

(INCLUDES WEIGHT OF CONCRETE ONLY)

Note: The above deflections are not to be used in the field if the engineer is working from the grade elevations adjusted for dead load deflections as shown in this sheet.

BEAM 1

Location	Station	Offset (ft)	Theoretical Grade Elevations	Theoretical Grade Elevations Adjusted for DL Deflection
Bk. S. Abut.	99+21.77	-34.00	652.14	652.14
℄ Brg. S. Abut.	99+22.17	-34.00	652.13	652.13
A	99+32.17	-34.00	651.98	651.99
B	99+42.17	-34.00	651.82	651.84
C	99+52.17	-34.00	651.67	651.69
D	99+62.17	-34.00	651.51	651.52
℄S. Brg. Pier	99+75.48	-34.00	651.30	651.30
℄ Pier	99+76.19	-34.00	651.29	651.29
℄N. Brg. Pier	99+76.91	-34.00	651.28	651.28
E	99+86.91	-34.00	651.12	651.14
F	99+96.91	-34.00	650.97	650.99
G	100+06.91	-34.00	650.81	650.83
H	100+16.91	-34.00	650.66	650.67
℄ Brg. N. Abut.	100+30.21	-34.00	650.45	650.45
Bk. N. Abut.	100+30.62	-34.00	650.44	650.44

BEAM 2

Location	Station	Offset (ft)	Theoretical Grade Elevations	Theoretical Grade Elevations Adjusted for DL Deflection
Bk. S. Abut.	99+24.57	-30.00	652.16	652.16
℄ Brg. S. Abut.	99+24.97	-30.00	652.15	652.15
A	99+34.97	-30.00	652.00	652.01
B	99+44.97	-30.00	651.84	651.86
C	99+54.97	-30.00	651.68	651.71
D	99+64.97	-30.00	651.53	651.54
℄S. Brg. Pier	99+78.28	-30.00	651.32	651.32
℄ Pier	99+78.99	-30.00	651.31	651.31
℄N. Brg. Pier	99+79.71	-30.00	651.30	651.30
E	99+89.71	-30.00	651.14	651.15
F	99+99.71	-30.00	650.99	651.01
G	100+09.71	-30.00	650.83	650.85
H	100+19.71	-30.00	650.67	650.69
℄ Brg. N. Abut.	100+33.01	-30.00	650.47	650.47
Bk. N. Abut.	100+33.42	-30.00	650.46	650.46

BEAM 3

Location	Station	Offset (ft)	Theoretical Grade Elevations	Theoretical Grade Elevations Adjusted for DL Deflection
Bk. S. Abut.	99+27.37	-26.00	652.18	652.18
℄ Brg. S. Abut.	99+27.77	-26.00	652.17	652.17
A	99+37.77	-26.00	652.02	652.03
B	99+47.77	-26.00	651.86	651.88
C	99+57.77	-26.00	651.70	651.72
D	99+67.77	-26.00	651.55	651.56
℄S. Brg. Pier	99+81.08	-26.00	651.34	651.34
℄ Pier	99+81.79	-26.00	651.33	651.33
℄N. Brg. Pier	99+82.51	-26.00	651.32	651.32
E	99+92.51	-26.00	651.16	651.17
F	100+02.51	-26.00	651.01	651.03
G	100+12.51	-26.00	650.85	650.87
H	100+22.51	-26.00	650.69	650.71
℄ Brg. N. Abut.	100+35.81	-26.00	650.49	650.49
Bk. N. Abut.	100+36.22	-26.00	650.48	650.48

BEAM 4

Location	Station	Offset (ft)	Theoretical Grade Elevations	Theoretical Grade Elevations Adjusted for DL Deflection
Bk. S. Abut.	99+30.17	-22.00	652.20	652.20
℄ Brg. S. Abut.	99+30.58	-22.00	652.19	652.19
A	99+40.58	-22.00	652.03	652.05
B	99+50.58	-22.00	651.88	651.90
C	99+60.58	-22.00	651.72	651.74
D	99+70.58	-22.00	651.57	651.58
℄S. Brg. Pier	99+83.88	-22.00	651.36	651.36
℄ Pier	99+84.60	-22.00	651.35	651.35
℄N. Brg. Pier	99+85.31	-22.00	651.34	651.34
E	99+95.31	-22.00	651.18	651.19
F	100+05.31	-22.00	651.02	651.04
G	100+15.31	-22.00	650.87	650.89
H	100+25.31	-22.00	650.71	650.73
℄ Brg. N. Abut.	100+38.62	-22.00	650.50	650.50
Bk. N. Abut.	100+39.02	-22.00	650.50	650.50

BEAM 5

Location	Station	Offset (ft)	Theoretical Grade Elevations	Theoretical Grade Elevations Adjusted for DL Deflection
Bk. S. Abut.	99+32.97	-18.00	652.22	652.22
℄ Brg. S. Abut.	99+33.38	-18.00	652.21	652.21
A	99+43.38	-18.00	652.05	652.06
B	99+53.38	-18.00	651.90	651.92
C	99+63.38	-18.00	651.74	651.76
D	99+73.38	-18.00	651.58	651.60
℄S. Brg. Pier	99+86.68	-18.00	651.38	651.38
℄ Pier	99+87.40	-18.00	651.37	651.37
℄N. Brg. Pier	99+88.11	-18.00	651.36	651.36
E	99+98.11	-18.00	651.20	651.21
F	100+08.11	-18.00	651.04	651.06
G	100+18.11	-18.00	650.89	650.91
H	100+28.11	-18.00	650.73	650.75
℄ Brg. N. Abut.	100+41.42	-18.00	650.52	650.52
Bk. N. Abut.	100+41.82	-18.00	650.52	650.52

BEAM 6

Location	Station	Offset (ft)	Theoretical Grade Elevations	Theoretical Grade Elevations Adjusted for DL Deflection
Bk. S. Abut.	99+35.77	-14.00	652.23	652.23
℄ Brg. S. Abut.	99+36.18	-14.00	652.23	652.23
A	99+46.18	-14.00	652.07	652.08
B	99+56.18	-14.00	651.92	651.94
C	99+66.18	-14.00	651.76	651.78
D	99+76.18	-14.00	651.60	651.62
℄S. Brg. Pier	99+89.48	-14.00	651.40	651.40
℄ Pier	99+90.20	-14.00	651.38	651.38
℄N. Brg. Pier	99+90.91	-14.00	651.37	651.37
E	100+00.91	-14.00	651.22	651.23
F	100+10.91	-14.00	651.06	651.08
G	100+20.91	-14.00	650.91	650.93
H	100+30.91	-14.00	650.75	650.77
℄ Brg. N. Abut.	100+44.22	-14.00	650.54	650.54
Bk. N. Abut.	100+44.62	-14.00	650.54	650.54

BEAM 7

Location	Station	Offset (ft)	Theoretical Grade Elevations	Theoretical Grade Elevations Adjusted for DL Deflection
Bk. S. Abut.	99+38.57	-10.00	652.25	652.25
℄ Brg. S. Abut.	99+38.98	-10.00	652.25	652.25
A	99+48.98	-10.00	652.09	652.10
B	99+58.98	-10.00	651.93	651.95
C	99+68.98	-10.00	651.78	651.80
D	99+78.98	-10.00	651.62	651.64
℄S. Brg. Pier	99+92.29	-10.00	651.41	651.41
℄ Pier	99+93.00	-10.00	651.40	651.40
℄N. Brg. Pier	99+93.71	-10.00	651.39	651.39
E	100+03.71	-10.00	651.24	651.25
F	100+13.71	-10.00	651.08	651.10
G	100+23.71	-10.00	650.92	650.95
H	100+33.71	-10.00	650.77	650.78
℄ Brg. N. Abut.	100+47.02	-10.00	650.56	650.56
Bk. N. Abut.	100+47.42	-10.00	650.55	650.55

BEAM 8

Location	Station	Offset (ft)	Theoretical Grade Elevations	Theoretical Grade Elevations Adjusted for DL Deflection
Bk. S. Abut.	99+41.37	-6.00	652.27	652.27
℄ Brg. S. Abut.	99+41.78	-6.00	652.27	652.27
A	99+51.78	-6.00	652.11	652.12
B	99+61.78	-6.00	651.95	651.97
C	99+71.78	-6.00	651.80	651.82
D	99+81.78	-6.00	651.64	651.66
℄S. Brg. Pier	99+95.09	-6.00	651.43	651.43
℄ Pier	99+95.80	-6.00	651.42	651.42
℄N. Brg. Pier	99+96.51	-6.00	651.41	651.41
E	100+06.51	-6.00	651.26	651.27
F	100+16.51	-6.00	651.10	651.12
G	100+26.51	-6.00	650.94	650.96
H	100+36.51	-6.00	650.79	650.80
℄ Brg. N. Abut.	100+49.82	-6.00	650.58	650.58
Bk. N. Abut.	100+50.23	-6.00	650.57	650.57

BEAM 9

Location	Station	Offset (ft)	Theoretical Grade Elevations	Theoretical Grade Elevations Adjusted for DL Deflection
Bk. S. Abut.	99+44.17	-2.00	652.29	652.29
℄ Brg. S. Abut.	99+44.58	-2.00	652.28	652.28
A	99+54.58	-2.00	652.13	652.14
B	99+64.58	-2.00	651.97	651.99
C	99+74.58	-2.00	651.82	651.84
D	99+84.58	-2.00	651.66	651.68
℄S. Brg. Pier	99+97.89	-2.00	651.45	651.45
℄ Pier	99+98.60	-2.00	651.44	651.44
℄N. Brg. Pier	99+99.31	-2.00	651.43	651.43
E	100+09.31	-2.00	651.27	651.29
F	100+19.31	-2.00	651.12	651.14
G	100+29.31	-2.00	650.96	650.98
H	100+39.31	-2.00	650.81	650.82
℄ Brg. N. Abut.	100+52.62	-2.00	650.60	650.60
Bk. N. Abut.	100+53.03	-2.00	650.59	650.59

PGL

Location	Station	Offset (ft)	Theoretical Grade Elevations	Theoretical Grade Elevations Adjusted for DL Deflection
Bk. S. Abut.	99+45.57	0.00	652.30	652.30
℄ Brg. S. Abut.	99+45.98	0.00	652.29	652.29
A	99+55.98	0.00	652.14	652.15
B	99+65.98	0.00	651.98	652.00
C	99+75.98	0.00	651.83	651.85
D	99+85.98	0.00	651.67	651.68
℄S. Brg. Pier	99+99.29	0.00	651.46	651.46
℄ Pier	100+00.00	0.00	651.45	651.45
℄N. Brg. Pier	100+00.71	0.00	651.44	651.44
E	100+10.71	0.00	651.28	651.30
F	100+20.71	0.00	651.13	651.15
G	100+30.71	0.00	650.97	650.99
H	100+40.71	0.00	650.82	650.83
℄ Brg. N. Abut.	100+54.02	0.00	650.61	650.61
Bk. N. Abut.	100+54.43	0.00	650.60	650.60

BEAM 10

Location	Station	Offset (ft)	Theoretical Grade Elevations	Theoretical Grade Elevations Adjusted for DL Deflection
Bk. S. Abut.	99+46.97	2.00	652.25	652.25
℄ Brg. S. Abut.	99+47.38	2.00	652.24	652.24
A	99+57.38	2.00	652.08	652.10
B	99+67.38	2.00	651.93	651.95
C	99+77.38	2.00	651.77	651.79
D	99+87.38	2.00	651.62	651.63
℄S. Brg. Pier	100+00.69	2.00	651.41	651.41
℄ Pier	100+01.40	2.00	651.40	651.40
℄N. Brg. Pier	100+02.11	2.00	651.39	651.39
E	100+12.11	2.00	651.23	651.24
F	100+22.11	2.00	651.07	651.09
G	100+32.11	2.00	650.92	650.94
H	100+42.11	2.00	650.76	650.78
℄ Brg. N. Abut.	100+55.42	2.00	650.55	650.55
Bk. N. Abut.	100+55.83	2.00	650.55	650.55

BEAM 11

Location	Station	Offset (ft)	Theoretical Grade Elevations	Theoretical Grade Elevations Adjusted for DL Deflection
Bk. S. Abut.	99+49.77	6.00	652.14	652.14
℄ Brg. S. Abut.	99+50.18	6.00	652.13	652.13
A	99+60.18	6.00	651.98	651.99
B	99+70.18	6.00	651.82	651.84
C	99+80.18	6.00	651.67	651.69
D	99+90.18	6.00	651.51	651.53
℄S. Brg. Pier	100+03.49	6.00	651.30	651.30
℄ Pier	100+04.20	6.00	651.29	651.29
℄N. Brg. Pier	100+04.91	6.00	651.28	651.28
E	100+14.91	6.00	651.12	651.14
F	100+24.91	6.00	650.97	650.99
G	100+34.91	6.00	650.81	650.83
H	100+44.91	6.00	650.66	650.67
℄ Brg. N. Abut.	100+58.22	6.00	650.45	650.45
Bk. N. Abut.	100+58.63	6.00	650.44	650.44

BEAM 12

Location	Station	Offset (ft)	Theoretical Grade Elevations	Theoretical Grade Elevations Adjusted for DL Deflection
Bk. S. Abut.	99+52.58	10.00	652.03	652.03
℄ Brg. S. Abut.	99+52.98	10.00	652.03	652.03
A	99+62.98	10.00	651.87	651.88
B	99+72.98	10.00	651.72	651.74
C	99+82.98	10.00	651.56	651.58
D	99+92.98	10.00	651.40	651.42
℄S. Brg. Pier	100+06.29	10.00	651.20	651.20
℄ Pier	100+07.00	10.00	651.19	651.19
℄N. Brg. Pier	100+07.71	10.00	651.17	651.17
E	100+17.71	10.00	651.02	651.03
F	100+27.71	10.00	650.86	650.88
G	100+37.71	10.00	650.71	650.73
H	100+47.71	10.00	650.55	650.57
℄ Brg. N. Abut.	100+61.02	10.00	650.34	650.34
Bk. N. Abut.	100+61.43	10.00	650.34	650.34

BEAM 13

Location	Station	Offset (ft)	Theoretical Grade Elevations	Theoretical Grade Elevations Adjusted for DL Deflection
Bk. S. Abut.	99+55.38	14.00	651.93	651.93
℄ Brg. S. Abut.	99+55.78	14.00	651.92	651.92
A	99+65.78	14.00	651.77	651.78
B	99+75.78	14.00	651.61	651.63
C	99+85.78	14.00	651.45	651.47
D	99+95.78	14.00	651.30	651.31
℄S. Brg. Pier	100+09.09	14.00	651.09	651.09
℄ Pier	100+09.80	14.00	651.08	651.08
℄N. Brg. Pier	100+10.52	14.00	651.07	651.07
E	100+20.52	14.00	650.91	650.92
F	100+30.52	14.00	650.76	650.78
G	100+40.52	14.00	650.60	650.62
H	100+50.52	14.00	650.44	650.46
℄ Brg. N. Abut.	100+63.82	14.00	650.24	650.24
Bk. N. Abut.	100+64.23	14.00	650.23	650.23

BEAM 14

Location	Station	Offset (ft)	Theoretical Grade Elevations	Theoretical Grade Elevations Adjusted for DL Deflection
Bk. S. Abut.	99+58.18	18.00	651.82	651.82
℄ Brg. S. Abut.	99+58.58	18.00	651.82	651.82
A	99+68.58	18.00	651.66	651.67
B	99+78.58	18.00	651.50	651.52
C	99+88.58	18.00	651.35	651.37
D	99+98.58	18.00	651.19	651.21
℄S. Brg. Pier	100+11.89	18.00	650.98	650.98
℄ Pier	100+12.60	18.00	650.97	650.97
℄N. Brg. Pier	100+13.32	18.00	650.96	650.96
E	100+23.32	18.00	650.81	650.82
F	100+33.32	18.00	650.65	650.67
G	100+43.32	18.00	650.49	650.51
H	100+53.32	18.00	650.34	650.35
℄ Brg. N. Abut.	100+66.62	18.00	650.13	650.13
Bk. N. Abut.	100+67.03	18.00	650.12	650.12

BEAM 15

Location	Station	Offset (ft)	Theoretical Grade Elevations	Theoretical Grade Elevations Adjusted for DL Deflection
Bk. S. Abut.	99+60.98	22.00	651.72	651.72
℄ Brg. S. Abut.	99+61.38	22.00	651.71	651.71
A	99+71.38	22.00	651.55	651.57
B	99+81.38	22.00	651.40	651.42
C	99+91.38	22.00	651.24	651.26
D	100+01.38	22.00	651.09	651.10
℄S. Brg. Pier	100+14.69	22.00	650.88	650.88
℄ Pier	100+15.40	22.00	650.87	650.87
℄N. Brg. Pier	100+16.12	22.00	650.86	650.86
E	100+26.12	22.00	650.70	650.71
F	100+36.12	22.00	650.54	650.56
G	100+46.12	22.00	650.39	650.41
H	100+56.12	22.00	650.23	650.25
℄ Brg. N. Abut.	100+69.42	22.00	650.02	650.02
Bk. N. Abut.	100+69.83	22.00	650.02	650.02

BEAM 16

Location	Station	Offset (ft)	Theoretical Grade Elevations	Theoretical Grade Elevations Adjusted for DL Deflection
Bk. S. Abut.	99+63.78	26.00	651.61	651.61
℄ Brg. S. Abut.	99+64.19	26.00	651.60	651.60
A	99+74.19	26.00	651.45	651.46
B	99+84.19	26.00	651.29	651.31
C	99+94.19	26.00	651.14	651.16
D	100+04.19	26.00	650.98	650.99
℄S. Brg. Pier	100+17.49	26.00	650.77	650.77
℄ Pier	100+18.21	26.00	650.76	650.76
℄N. Brg. Pier	100+18.92	26.00	650.75	650.75
E	100+28.92	26.00	650.59	650.61
F	100+38.92	26.00	650.44	650.46
G	100+48.92	26.00	650.28	650.30
H	100+58.92	26.00	650.13	650.14
℄ Brg. N. Abut.	100+72.23	26.00	649.92	649.92
Bk. N. Abut.	100+72.63	26.00	649.91	649.91

BEAM 17

Location	Station	Offset (ft)	Theoretical Grade Elevations	Theoretical Grade Elevations Adjusted for DL Deflection
Bk. S. Abut.	99+66.58	30.00	651.50	651.50
℄ Brg. S. Abut.	99+66.99	30.00	651.50	651.50
A	99+76.99	30.00	651.34	651.35
B	99+86.99	30.00	651.19	651.20
C	99+96.99	30.00	651.03	651.05
D	100+06.99	30.00	650.87	650.89
℄S. Brg. Pier	100+20.29	30.00	650.67	650.67
℄ Pier	100+21.01	30.00	650.65	650.65
℄N. Brg. Pier	100+21.72	30.00	650.64	650.64
E	100+31.72	30.00	650.49	650.50
F	100+41.72	30.00	650.33	650.35
G	100+51.72	30.00	650.18	650.20
H	100+61.72	30.00	650.02	650.03
℄ Brg. N. Abut.	100+75.03	30.00	649.81	649.81
Bk. N. Abut.	100+75.43	30.00	649.81	649.81

BEAM 18

Location	Station	Offset (ft)	Theoretical Grade Elevations	Theoretical Grade Elevations Adjusted for DL Deflection
Bk. S. Abut.	99+69.38	34.00	651.40	651.40
℄ Brg. S. Abut.	99+69.79	34.00	651.39	651.39
A	99+79.79	34.00	651.23	651.25
B	99+89.79	34.00	651.08	651.10
C	99+99.79	34.00	650.92	650.94
D	100+09.79	34.00	650.77	650.78
℄S. Brg. Pier	100+23.09	34.00	650.56	650.56
℄ Pier	100+23.81	34.00	650.55	650.55
℄N. Brg. Pier	100+24.52	34.00	650.54	650.54
E	100+34.52	34.00	650.38	650.39
F	100+44.52	34.00	650.23	650.24
G	100+54.52	34.00	650.07	650.09
H	100+64.52	34.00	649.91	649.93
℄ Brg. N. Abut.	100+77.83	34.00	649.71	649.71
Bk. N. Abut.	100+78.23	34.00	649.70	649.70

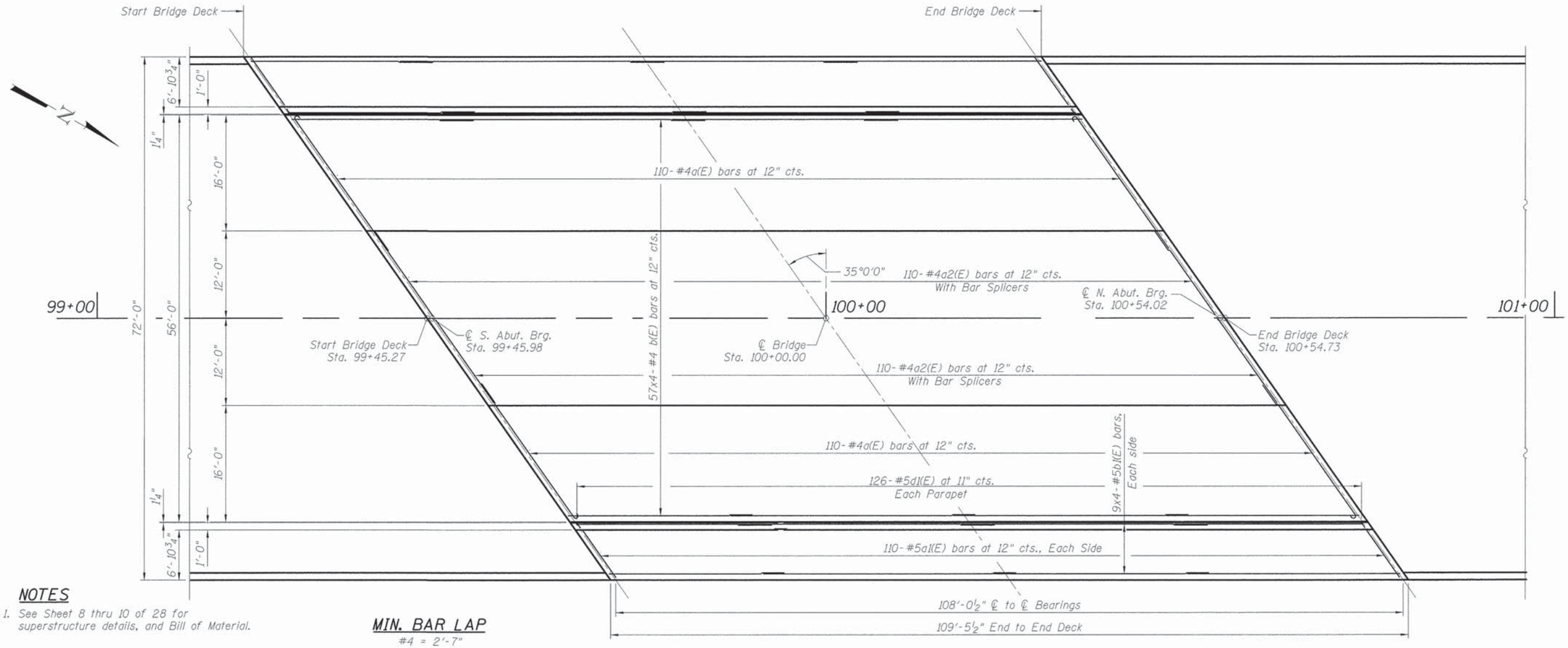

NOTES

1. See Sheet 8 thru 10 of 28 for superstructure details, and Bill of Material.
2. Bars indicated thus 4x3-#5 etc. indicates 4 lines of bars with 3 lengths per line.

MIN. BAR LAP

#4 = 2'-7"
#5 = 3'-3"

DECK PLAN

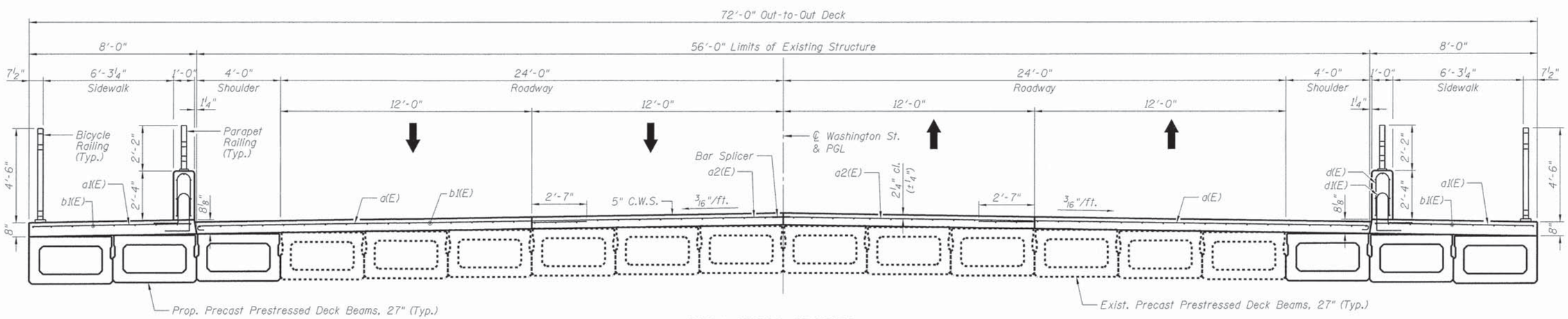

DECK CROSS SECTION

(Looking North)

FILE NAME = L:\Naperville\15238-01 Washington Ph2\Drawings\CADD Sheets\S-07 Deck Plan & Cross Section.dgn

CMT
License No. 184-000613

USER NAME = Peter Ross	DESIGNED - PA	REVISED -	
	DRAWN - DH	REVISED -	
PLOT SCALE = 7.5003 ' / in.	CHECKED - PA	REVISED -	
PLOT DATE = 12/12/2015 11:14:28 AM	DATE - 12/7/2015	REVISED -	

STATE OF ILLINOIS
DEPARTMENT OF TRANSPORTATION

DECK PLAN & CROSS SECTION
WASHINGTON STREET

SCALE: | SHEET 7 OF 28 SHEETS | STA. | TO STA.

F.A.U. RTE.	SECTION	COUNTY	TOTAL SHEETS	SHEET NO.
2552	14-00161-00-BR	WILL	86	43

CONTRACT NO. 61C38

ILLINOIS FED. AID PROJECT DPC-M-4003(356)

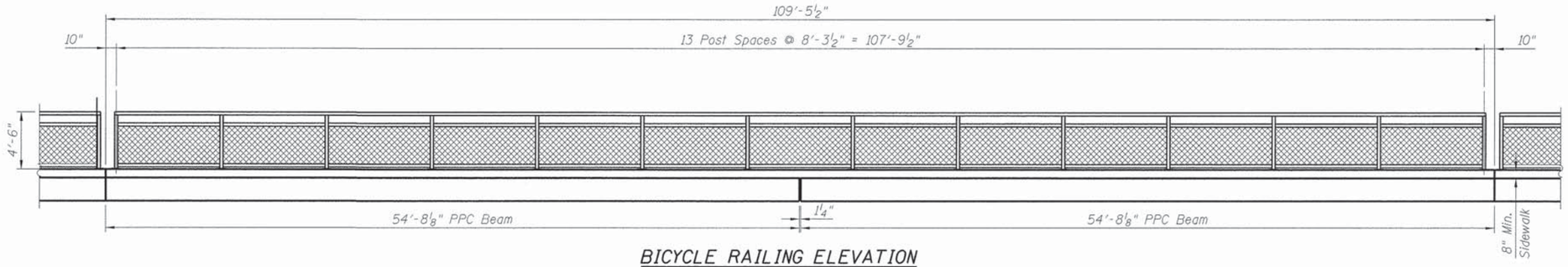

BICYCLE RAILING ELEVATION

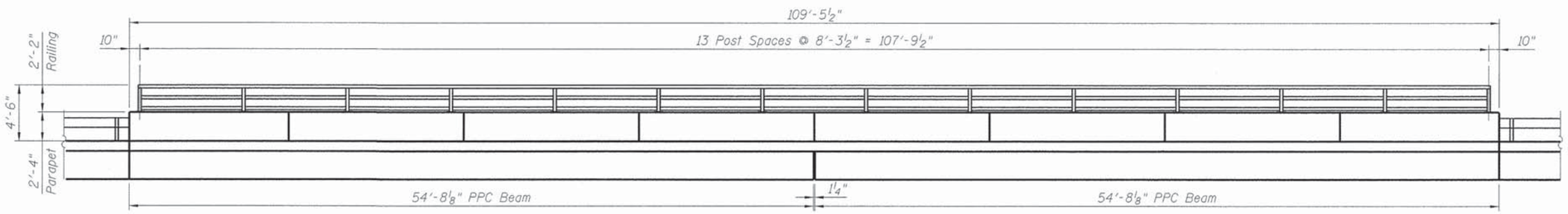

PARAPET RAILING ELEVATION

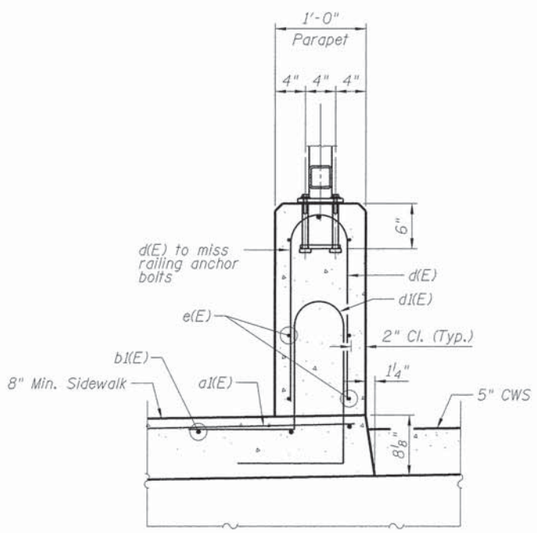

SECTION THRU PARAPET

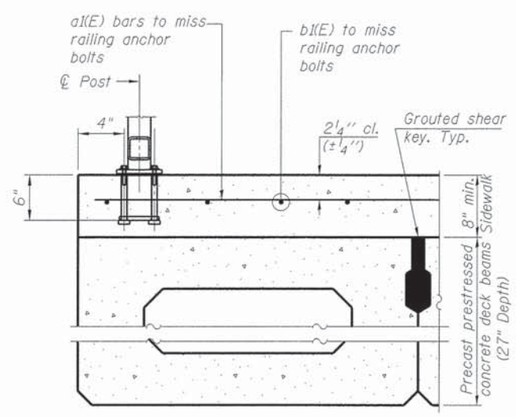

SECTION THRU EDGE FASCIA BEAM

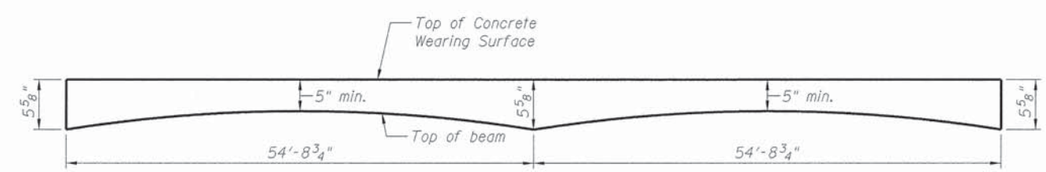

ANTICIPATED CONCRETE WEARING SURFACE PROFILE

(For information only)

FILE NAME = L:\Naperville\15238-01_WashingtonPh2\Draw\CADD_Sheets\S-08 Superstructure Details 1.dgn

CMT	USER NAME = Peter Ross	DESIGNED - PA	REVISED -	STATE OF ILLINOIS DEPARTMENT OF TRANSPORTATION	SUPERSTRUCTURE DETAILS - I WASHINGTON STREET	F.A.U. RTE.	SECTION	COUNTY	TOTAL SHEETS / SHEET NO.
		DRAWN - DH	REVISED -			2552	14-00161-00-BR	WILL	86 / 44
	PLOT SCALE = 5.0002 ' / in.	CHECKED - PA	REVISED -					CONTRACT NO. 61C38	
License No. 184-000613 ©Copyright CMT, Inc.	PLOT DATE = 12/12/2015 11:14:28 AM	DATE - 12/7/2015	REVISED -		SCALE: SHEET 8 OF 28 SHEETS STA. TO STA.			ILLINOIS FED. AID PROJECT DPC-M-4003(356)	

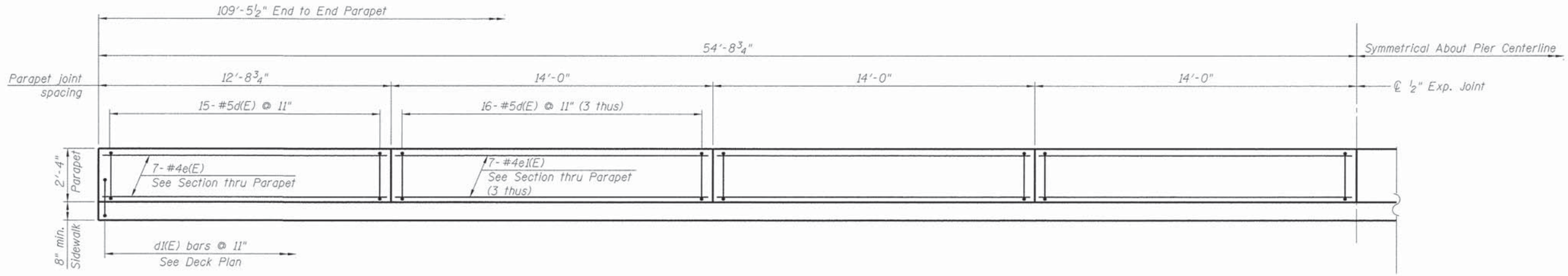

INSIDE ELEVATION OF WEST PARAPET

(East Parapet Elevation Similar)

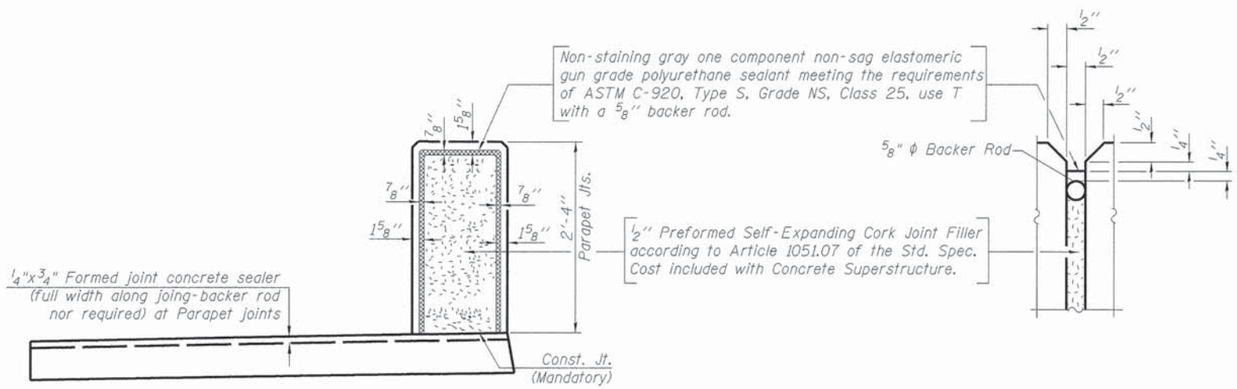

PARAPET JOINT DETAILS

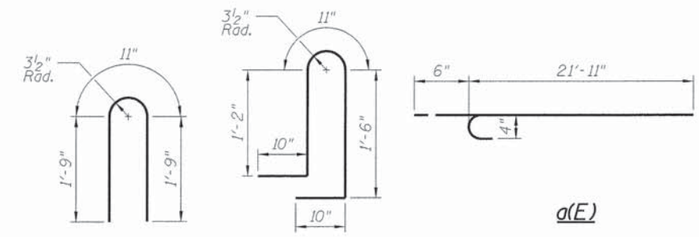

BILL OF MATERIAL

Bar	No.	Size	Length	Shape
a(E)	220	#4	22'-5"	
a1(E)	220	#5	9'-5"	
a2(E)	220	#4	14'-4"	
b(E)	228	#4	29'-3"	
b1(E)	72	#5	29'-7"	
d(E)	252	#5	4'-5"	
d1(E)	252	#5	5'-3"	
e(E)	28	#4	12'-5"	
e1(E)	84	#4	13'-8"	
Bridge Deck Grooving			Sq. Yd.	657
Concrete Superstructure			Cu. Yd.	62.1
Protective Coat			Sq. Yd.	985
Reinforcement Bars, Epoxy Coated			Pound	17,780
Bar Splicers			Each	110
Concrete Wearing Surface, 5"			Sq. Yd.	681

NOTE:

1. See Sheet 13 of 28 for Railing Details.

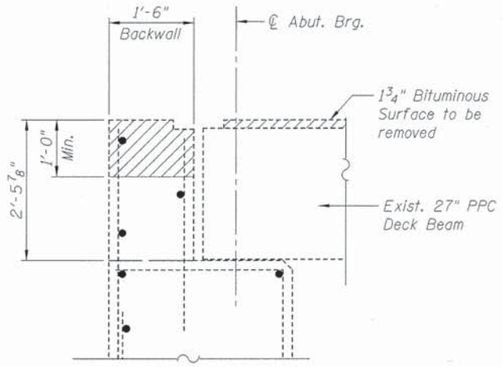

LIMITS OF REMOVAL

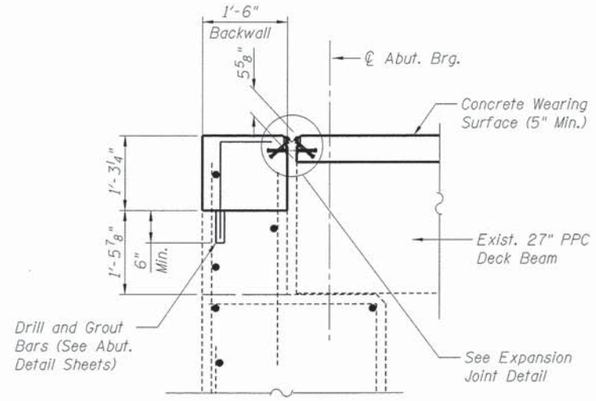

RECONSTRUCTION

SECTION AT EXISTING ABUTMENT

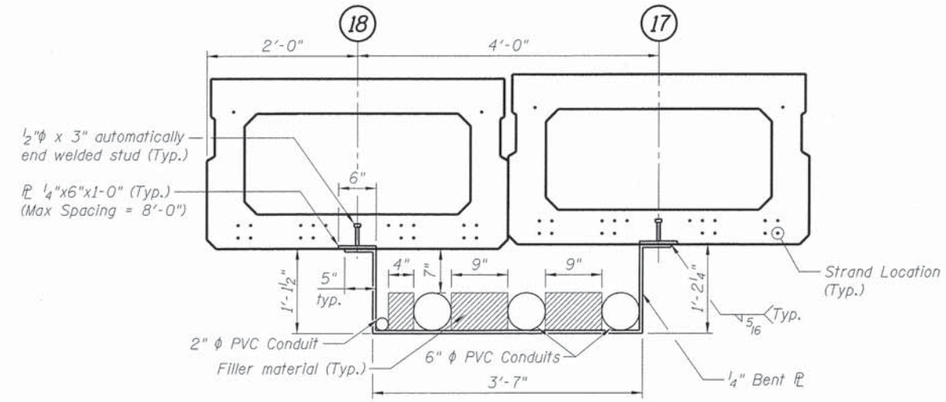

SECTION

Cost of bent plates, anchorage plates and studs shall be included in Furnishing and Erecting Structural Steel.

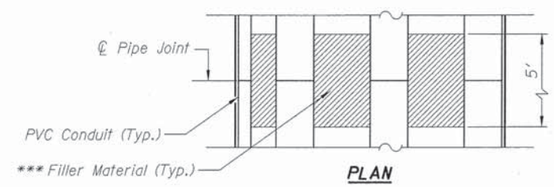

PLAN

*** Filler material shall be provided by the Contractor to prevent lateral movement of the conduits. The material shall be celled polypropylene based foam or equivalent. The cost of furnishing and installing the material shall be incidental to Furnishing and Erecting Structural Steel.

CONDUIT ATTACHMENT DETAIL

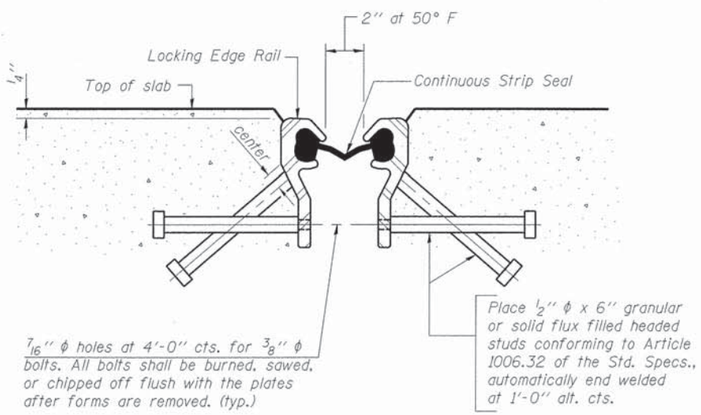

SECTION THRU EXPANSION STRIP SEAL JOINT

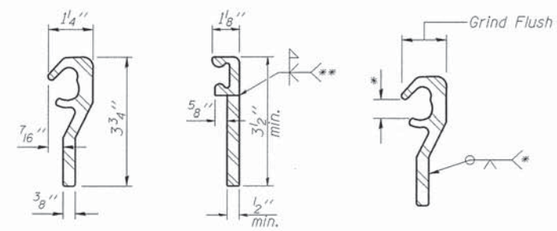

ROLLED (EXTRUDED) RAIL

WELDED RAIL

LOCKING EDGE RAIL SPLICE

Rolled rail shown, welded rail similar.

LOCKING EDGE RAIL

* Omit weld at seal opening.

** Back gouge not required if complete joint penetration is verified by mock-up.

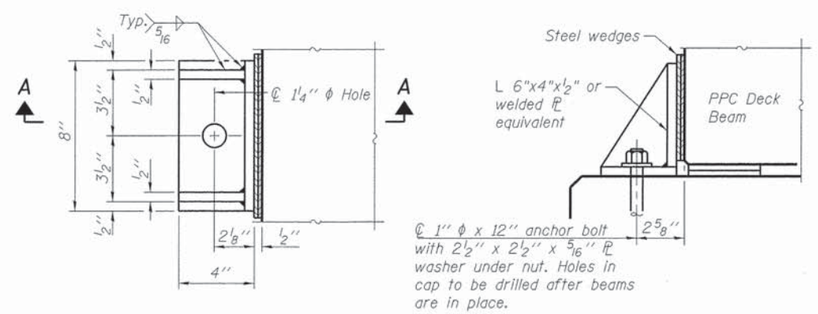

PLAN

SECTION A-A

SIDE RETAINERS AT ABUTMENT

NOTES

1. The strip seal shall be made continuous and shall have a minimum thickness of ¼". The configuration of the strip seal shall match the configuration of the Locking Edge Rails.
2. The height and thickness of the Locking Edge Rails shown are minimum dimensions. The actual configuration of the Locking Edge Rails and matching strip seal may vary from manufacturer to manufacturer. Flanged edge rails will not be allowed.
3. The inside of the Locking Edge Rail groove shall be free of weld residue.
4. Locking Edge Rails may be spliced at slope discontinuities and stage construction joints.
5. The manufacturer's recommended installation methods shall be followed.
6. All steel components shall be galvanized after fabrication according to Article 520.03 of the Standard Specifications.
7. Maximum space between rail segments at stage lines shall be 3/16", sealed with a suitable sealant.
8. The joint opening and deck dimensions detailed on the superstructure are based on a preformed joint seal. If the contractor elects to use the alternate strip seal joint, the opening and deck dimensions shall be modified according to the dimensions detailed on this sheet. Required modifications shall be made at no additional cost to the State.

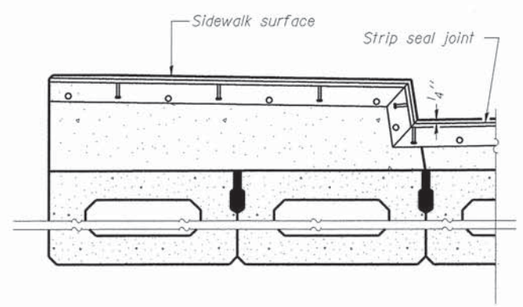

TYPICAL END TREATMENTS FOR STRIP SEAL

NOTES

1. Cost of retainers, anchors and accessories are included with Precast Prestressed Concrete Deck Beams.
2. Equivalent rolled angle with stiffeners will be allowed in lieu of welded plates.
3. The side retainers and steel wedges shall be galvanized after shop fabrication according to AASHTO M 111 and ASTM 385.
4. Anchor bolts and plate washers shall be galvanized according to AASHTO M 232. After the notch or concrete overlay are poured and cured, the steel wedges shall be removed.

BILL OF MATERIAL

Item	Unit	Total
Preformed Joint Strip Seal	Foot	176

FILE NAME = L:\Naperville\15238-01_WashingtonPh2\Draw\CADD_Sheets\S-10 Superstructure Details III.dgn

CMT
License No. 184-000613 ©Copyright CMT, Inc.

USER NAME = Peter Ross	DESIGNED - PA	REVISED -
	DRAWN - DH	REVISED -
PLOT SCALE = 1.0000 ' / in.	CHECKED - PA	REVISED -
PLOT DATE = 1/12/2016 1:58:57 PM	DATE - 12/7/2015	REVISED -

STATE OF ILLINOIS
DEPARTMENT OF TRANSPORTATION

SUPERSTRUCTURE DETAILS – III
WASHINGTON STREET

SCALE: | SHEET 10 OF 28 SHEETS | STA. TO STA.

F.A.U. RTE.	SECTION	COUNTY	TOTAL SHEETS	SHEET NO.
2552	14-00161-00-BR	WILL	86	46

CONTRACT NO. 61C38

ILLINOIS FED. AID PROJECT DPC-M-4003(356)

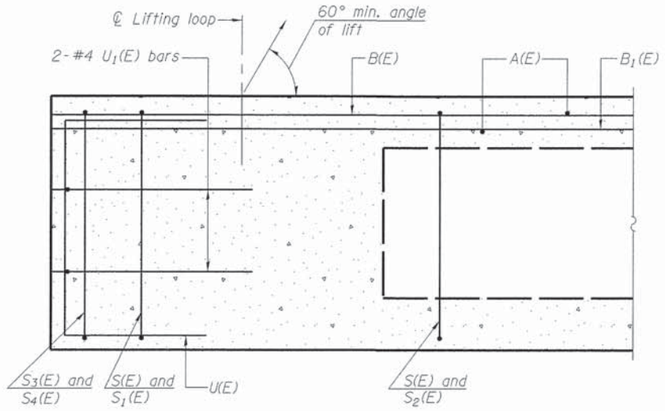

SECTION A-A

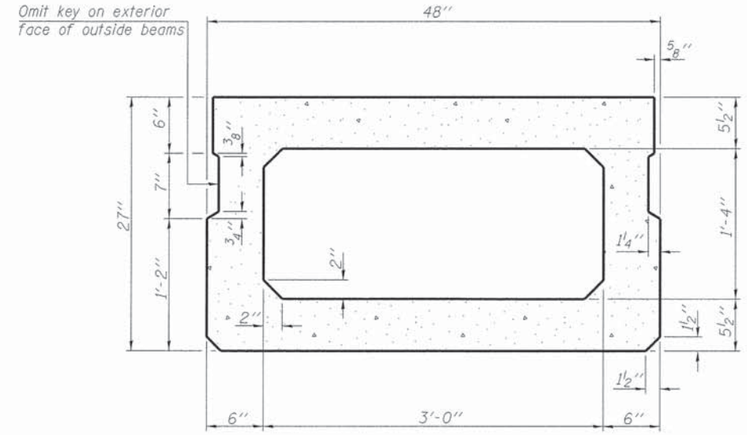

SECTION B-B

(Showing dimensions)

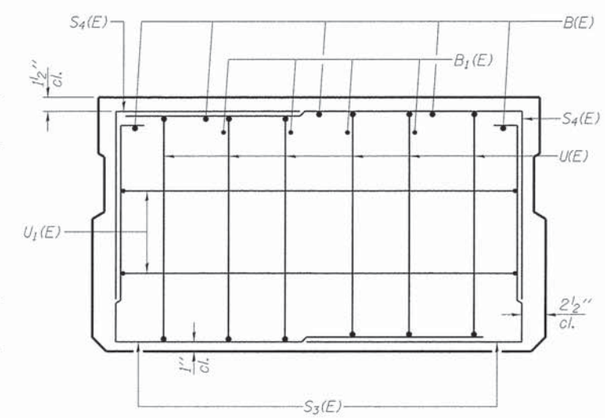

VIEW C-C

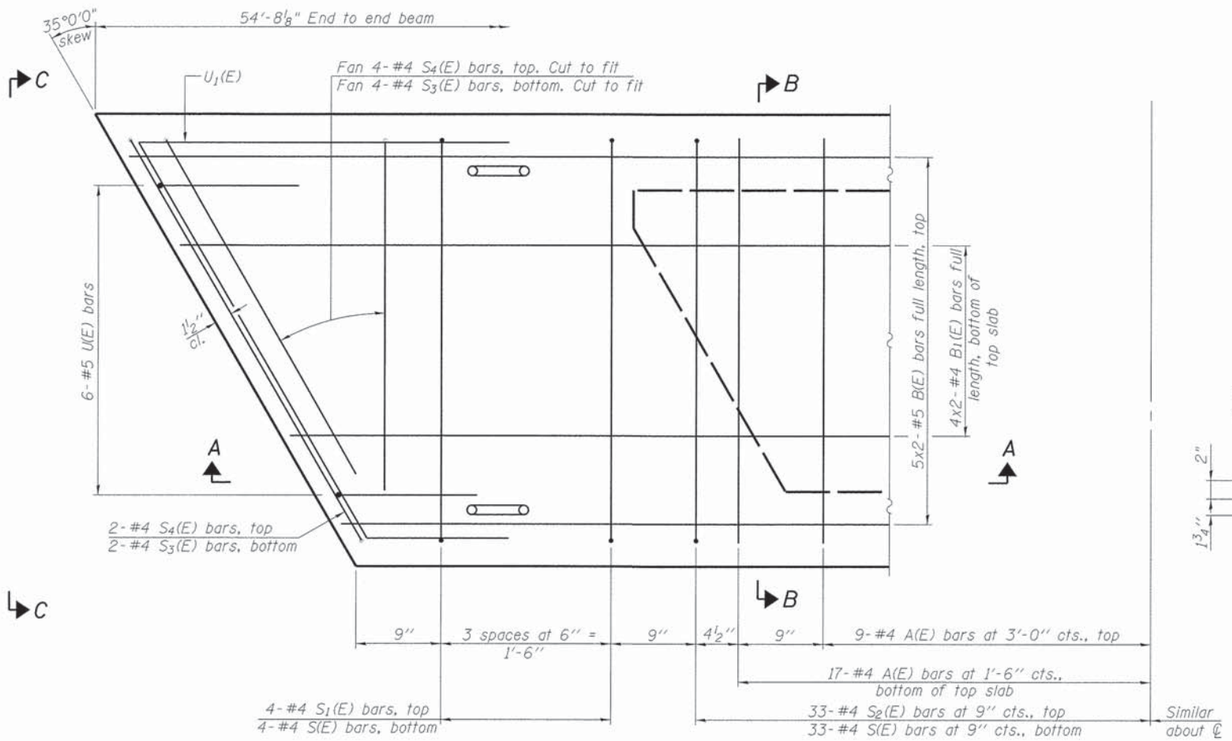

PLAN VIEW

Note: Spacing of S(E) and S2(E) bars may be adjusted up to 4" in the immediate area of the transverse tie diaphragms to miss the block outs for the transverse ties.

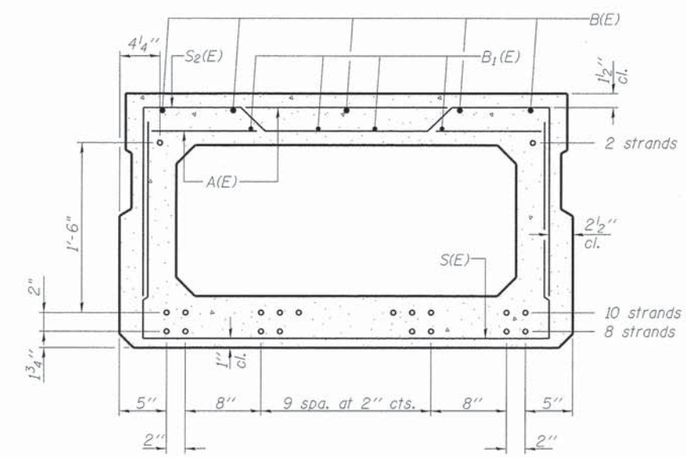

SECTION B-B

(Showing reinforcement and permissible strand locations)

Note: Place the number of strands specified in each row symmetrically about the centerline of beam in the permissible strand locations shown.

BAR LIST
ONE BEAM ONLY

(For information only)

Bar	No.	Size	Length	Shape
A(E)	52	#4	3'-7"	—
B(E)	20	#5	28'-5"	—
B1(E)	16	#4	28'-2"	—
S(E)	74	#4	8'-5"	⊔
S1(E)	8	#4	6'-11"	⊓
S2(E)	66	#4	7'-2"	⊓
S3(E)	12	#4	5'-9"	⊔
S4(E)	12	#4	5'-0"	⊔
U(E)	12	#5	4'-6"	⊏
U1(E)	4	#4	9'-3"	⊏

Note: See sheet 12 of 28 for additional details and Bill of Material.

MINIMUM BAR LAP

#4 bar = 1'-11"
#5 bar = 2'-6"

FILE NAME = L:\Naperville\15230-01_Washington\Ph2\Draw\CADD_Sheets\S-11 27x48 PPC Deck Beam Details - 1.dgn

CMT
License No. 184-000613 © Copyright CMT, Inc.

USER NAME = Peter Ross	DESIGNED - PA	REVISED -	
	DRAWN - DH	REVISED -	
PLOT SCALE = 5.0002 ' / in.	CHECKED - PA	REVISED -	
PLOT DATE = 12/12/2015 11:14:31 AM	DATE - 12/7/2015	REVISED -	

STATE OF ILLINOIS
DEPARTMENT OF TRANSPORTATION

27"x48" PPC DECK BEAM DETAILS - I
WASHINGTON STREET

SCALE: | SHEET 11 OF 28 SHEETS | STA. TO STA.

F.A.U. RTE.	SECTION	COUNTY	TOTAL SHEETS	SHEET NO.
2552	14-00161-00-BR	WILL	86	47

CONTRACT NO. 61C38

ILLINOIS FED. AID PROJECT DPC-M-4003(356)

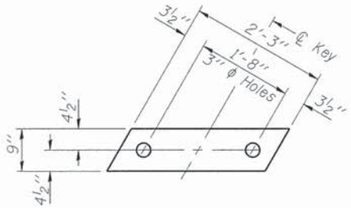

FABRIC BEARING PAD
(Interior)

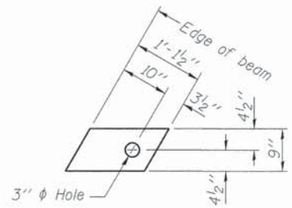

FABRIC BEARING PAD
(Exterior)

FIXED

Notes:
All bearing pads shall be ½" thick.
Omit holes when using expansion bearings.
Expansion bearing pad shall be bonded to the substructure.

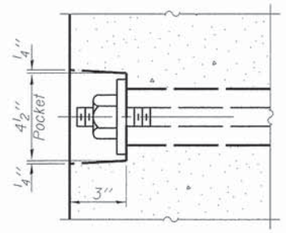

SECTION A-A

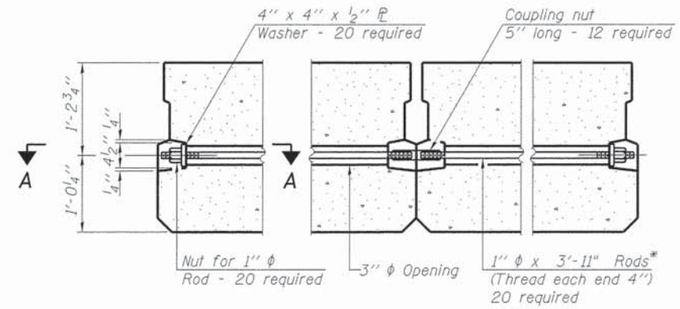

TYPICAL TRANSVERSE TIE ASSEMBLY

* Existing tie rods shall be utilized at beam lines 3 and 16.

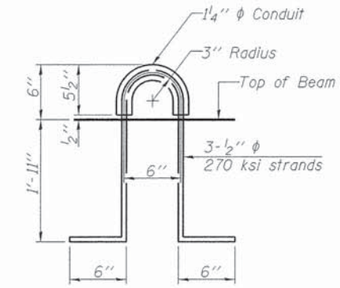

LIFTING LOOP DETAIL

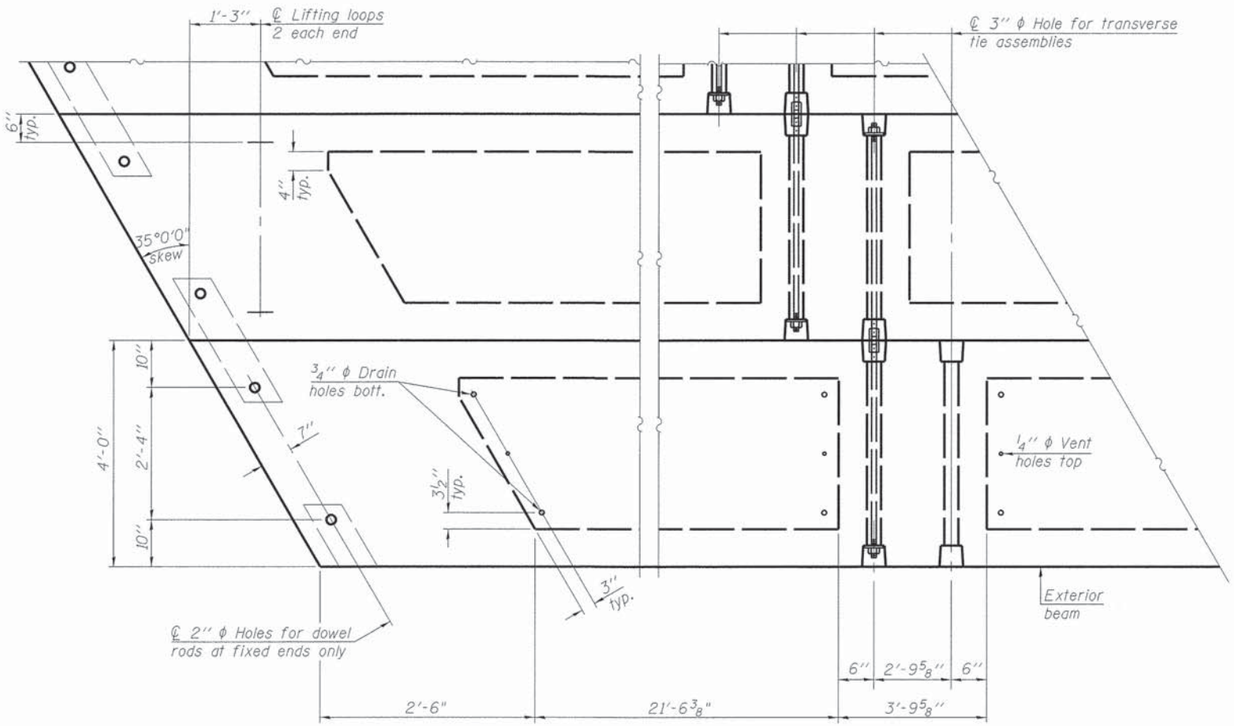

PLAN VIEW

Note: Connect beams in pairs with the transverse tie configuration shown.

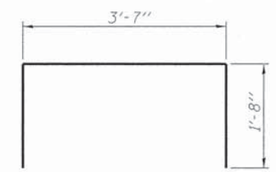

BAR S_1(E)

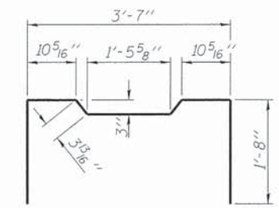

BAR S_2(E)

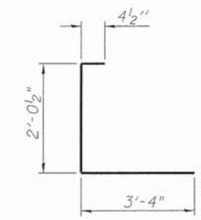

BAR S_3(E)

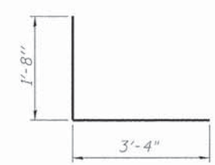

BAR S_4(E)

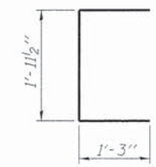

BAR U(E)

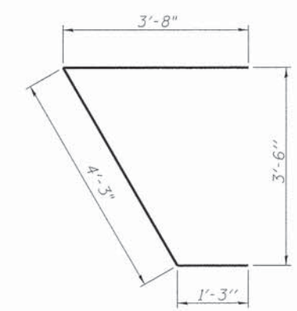

BAR U_1(E)

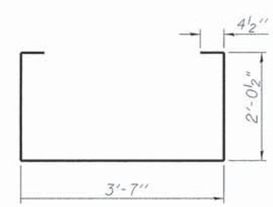

BAR S(E)

NOTES

Prestressing steel shall be uncoated high strength, low relaxation 7-wire strand, Grade 270. The nominal diameter shall be ½" and the nominal cross-sectional area shall be 0.153 sq. in.

The 1" ϕ rods in the transverse tie assembly shall be tightened to a snug fit and the threads set. Pockets on exterior faces of bridge shall be filled with grout after transverse tie assembly is in place.

Reinforcement bars shall conform to ASTM A 706, Grade 60. (See Special Provisions).

Two ⅛" fabric adjusting shims of the dimensions of the exterior bearing pad shall be provided for each bearing pad location.

A minimum 2½" ϕ lifting pin shall be used to engage the lifting loops during handling.

Corrosion Inhibitor, per Article 1020.05(b)(12) and 1021.06 of the Standard Specifications, shall be used in the concrete for precast prestressed concrete deck beams.

Compressive strength of prestressed concrete, f'c, shall be 6000 psi.

Compressive strength of prestressed concrete at release, f'ci, shall be 5000 psi.

BILL OF MATERIAL

Precast Prestressed Conc. Deck Bms. (27" depth)	Sq. Ft.	2,625

FILE NAME = L:\Naperville\15238-01_WashingtonPh2\Dr-aw\CADD_Sheets\S-12 27x48 PPC Deck Beam Details - II.dgn

CMT
Licensing No. 184-000613 ©Copyright CMT, Inc.

USER NAME = Peter Ross	DESIGNED - PA	REVISED -	
	DRAWN - DH	REVISED -	
PLOT SCALE = 5.0002 '/ in.	CHECKED - PA	REVISED -	
PLOT DATE = 12/12/2015 11:14:32 AM	DATE - 12/7/2015	REVISED -	

STATE OF ILLINOIS
DEPARTMENT OF TRANSPORTATION

27"x48" PPC DECK BEAM DETAILS – II
WASHINGTON STREET

SCALE: | SHEET 12 OF 28 SHEETS | STA. TO STA.

F.A.U. RTE.	SECTION	COUNTY	TOTAL SHEETS	SHEET NO.
2552	14-00161-00-BR	WILL	86	48
		CONTRACT NO. 61C38		
	ILLINOIS	FED. AID PROJECT DPC-M-4003(356)		

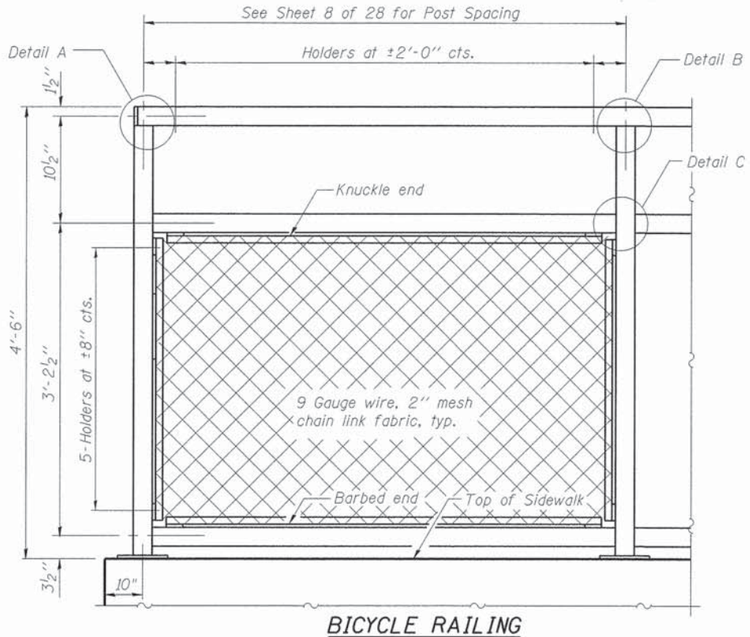

BICYCLE RAILING

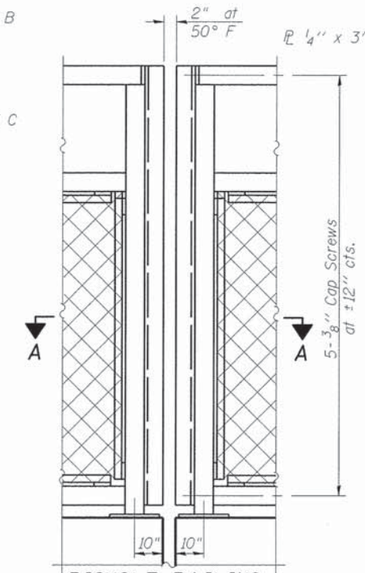

BICYCLE RAILING

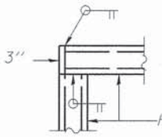

DETAIL A

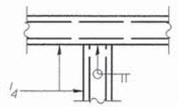

DETAIL B

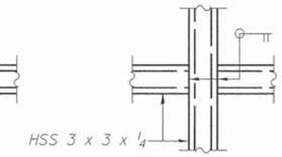

DETAIL C

Note:
All steel rail elements shall be galvanized according to Article 509.05 of the Standard Specifications.

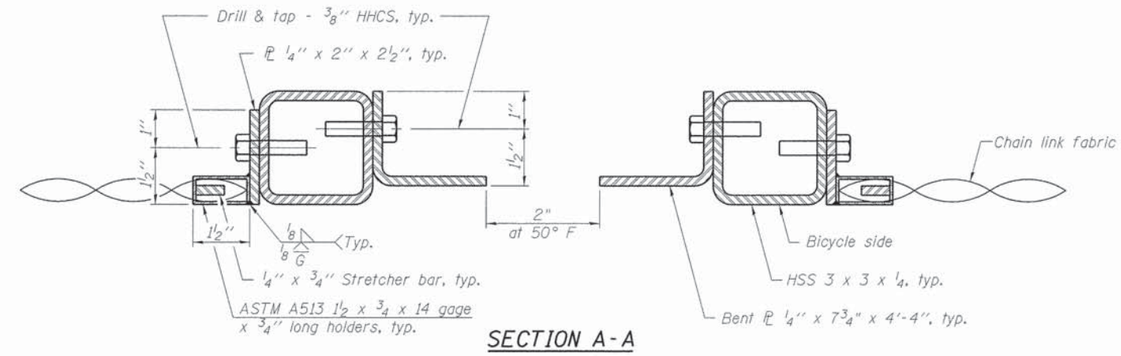

SECTION A-A

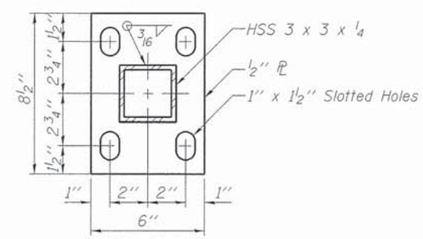

BASE PL

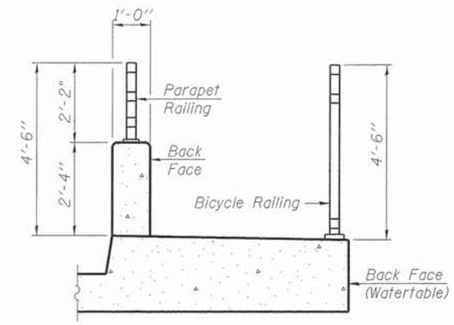

SECTION THRU SIDEWALK

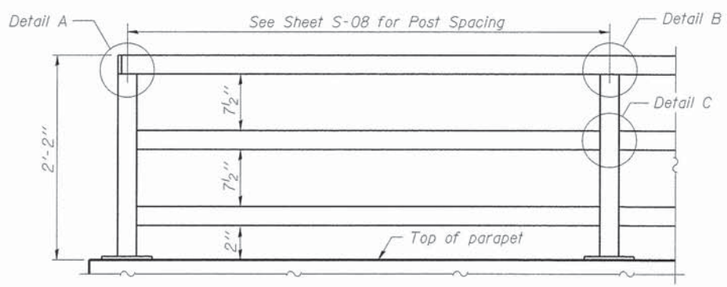

PARAPET RAILING ELEVATION
(Inside Face of Three Element Rail)

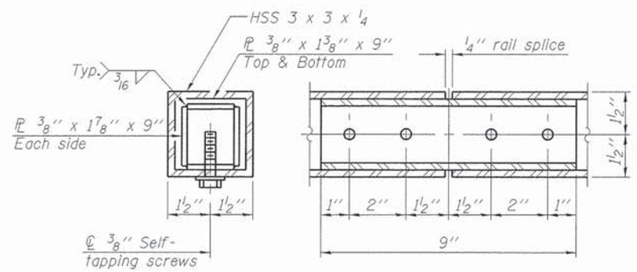

RAIL SPLICE

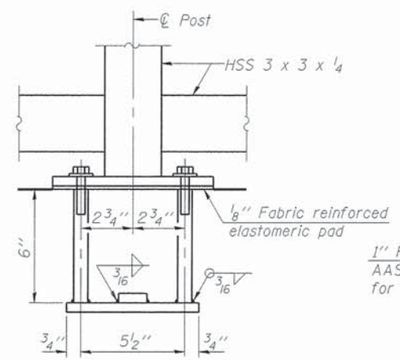

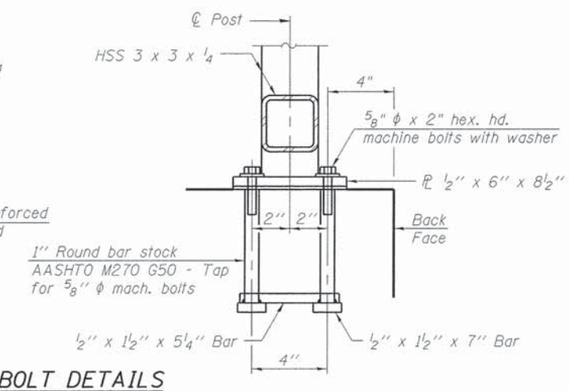

ANCHOR BOLT DETAILS

In lieu of the cast-in-place anchor device shown, the Contractor has the option of drilling and setting ⅝" ϕ anchor rods according to Article 509.06 of the Standard Specifications. Embedment shall be according to the manufacturer's specifications.

BILL OF MATERIAL

Item	Unit	Quantity
Bicycle Railing	Foot	452
Parapet Railing	Foot	219

FILE NAME = L:\Naperville\15230-01_WashingtonPh2\Dwg\CADD_Sheets\S-13 Railing Details.dgn

CMT
License No. 184-000613 ©Copyright CMT, Inc.

USER NAME = Peter Ross	DESIGNED - PA	REVISED -	
	DRAWN - DH	REVISED -	
PLOT SCALE = 5.0002 ' / in.	CHECKED - PA	REVISED -	
PLOT DATE = 12/12/2015 11:14:29 AM	DATE - 12/7/2015	REVISED -	

STATE OF ILLINOIS
DEPARTMENT OF TRANSPORTATION

RAILING DETAILS
WASHINGTON STREET

SCALE: | SHEET 13 OF 28 SHEETS | STA. | TO STA.

F.A.U. RTE.	SECTION	COUNTY	TOTAL SHEETS	SHEET NO.
2552	14-00161-00-BR	WILL	86	49
		CONTRACT NO. 61C38		
		ILLINOIS FED. AID PROJECT DPC-M-4003(356)		

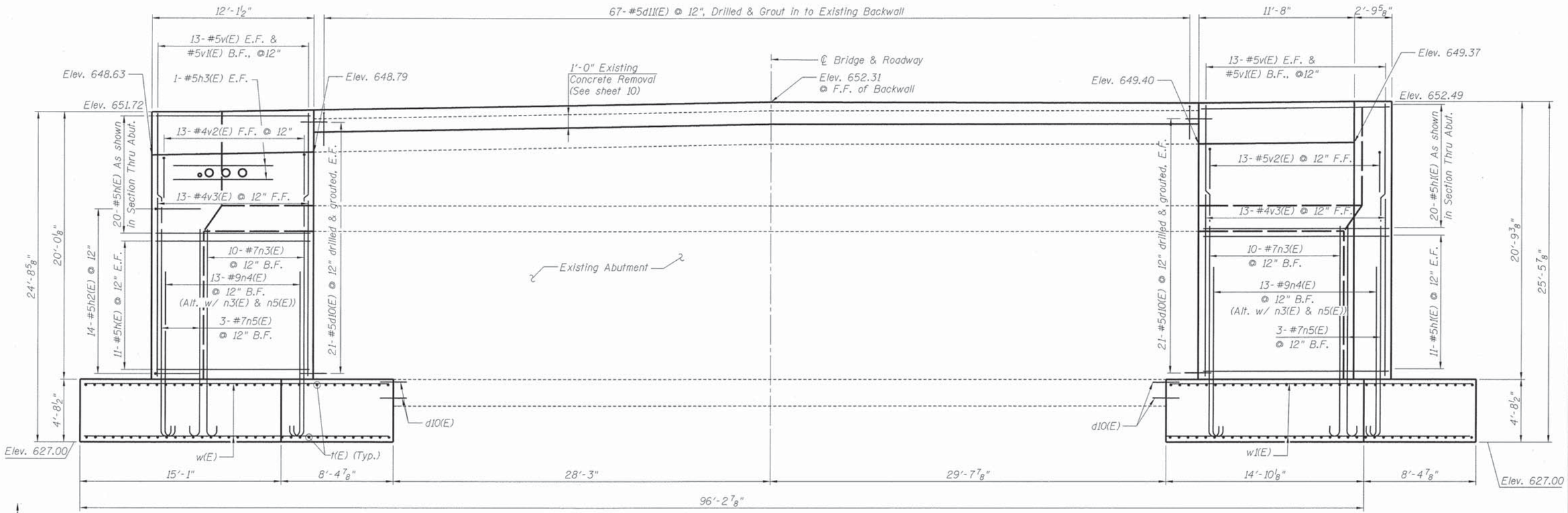

SOUTH ABUTMENT - ELEVATION

(Looking South)

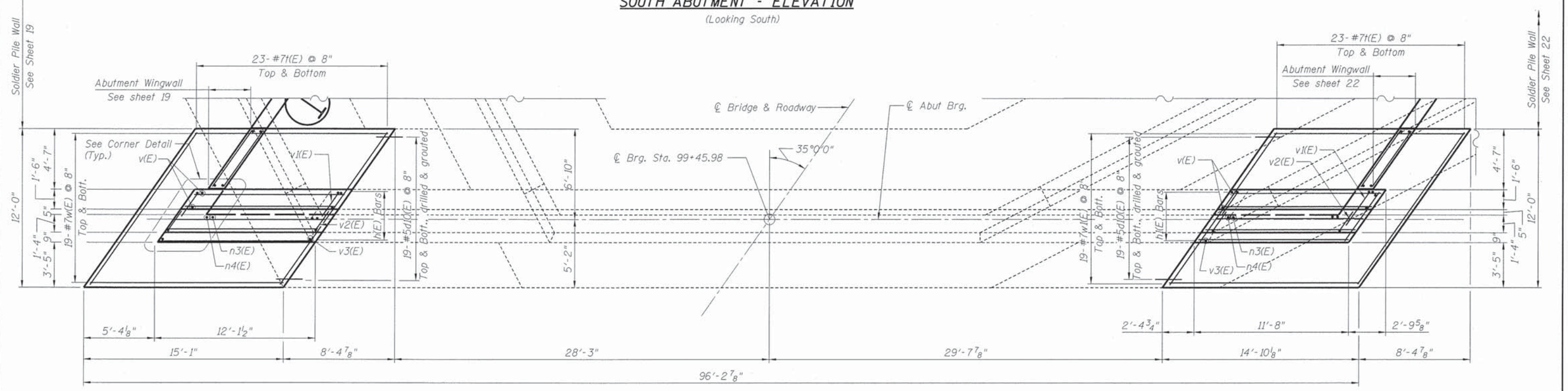

SOUTH ABUTMENT - PLAN

N

CMT	USER NAME = Peter Ross	DESIGNED - PA	REVISED -
		DRAWN - PA	REVISED -
	PLOT SCALE = 3.7502 ' / in.	CHECKED - PA	REVISED -
	PLOT DATE = 1/12/2016 1:58:58 PM	DATE - 12/7/2015	REVISED -

License No. 184-000613 ©Copyright CMT, Inc.

STATE OF ILLINOIS
DEPARTMENT OF TRANSPORTATION

SOUTH ABUTMENT
WASHINGTON STREET

SCALE: | SHEET 14 OF 28 SHEETS | STA. | TO STA.

F.A.U. RTE.	SECTION	COUNTY	TOTAL SHEETS	SHEET NO.
2552	14-00161-00-BR	WILL	86	50

CONTRACT NO. 61C38

ILLINOIS FED. AID PROJECT DPC-M-4003(356)

FILE NAME = L:\Naperville\15238-01_WashingtonPh2\Draw\CADD-Sheets\S-14 South Abutment.dgn

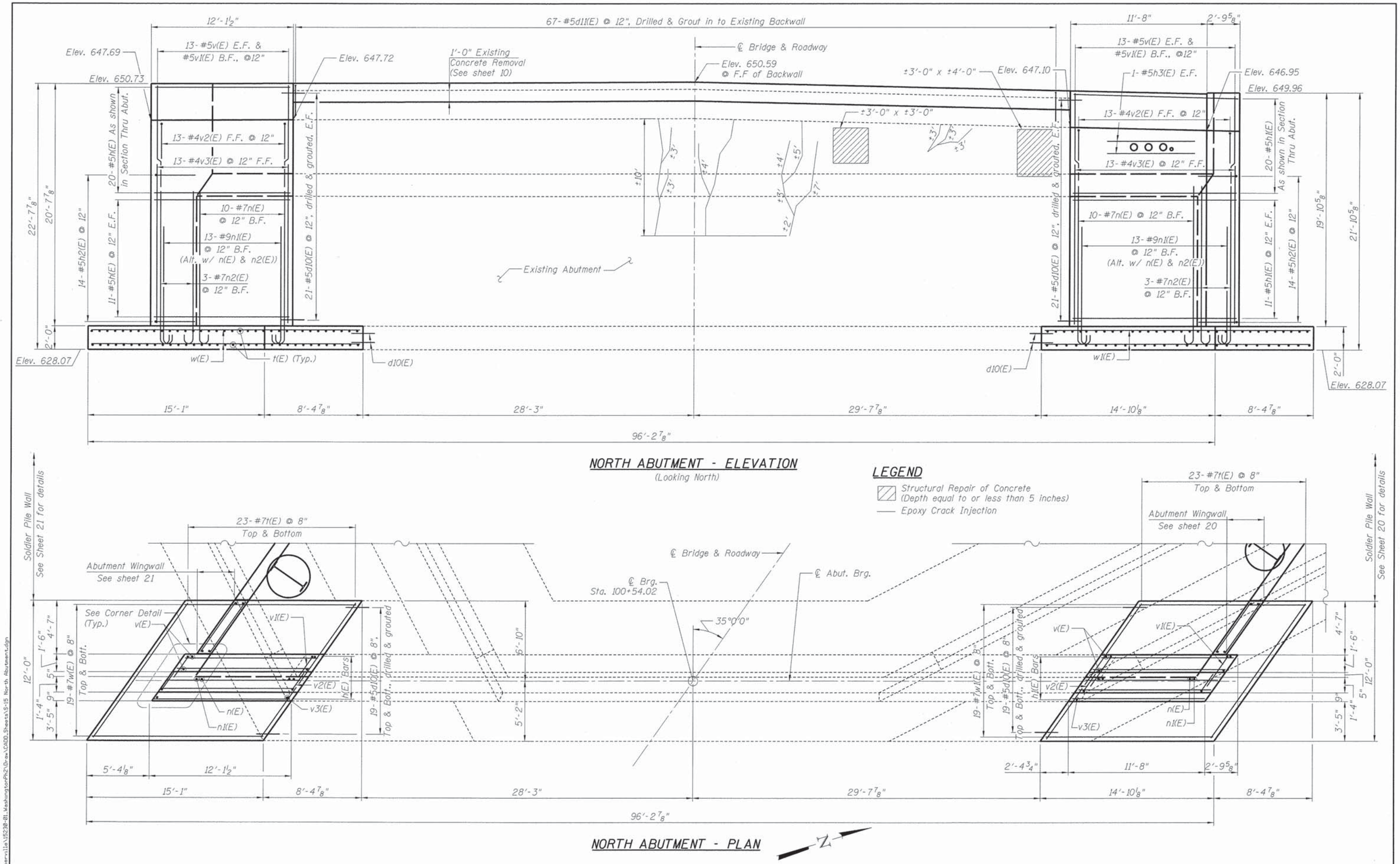

NORTH ABUTMENT - ELEVATION

(Looking North)

LEGEND

- Structural Repair of Concrete (Depth equal to or less than 5 inches)
- Epoxy Crack Injection

NORTH ABUTMENT - PLAN

USER NAME = Peter Ross	DESIGNED - PA	REVISED -	
	DRAWN - DH	REVISED -	
PLOT SCALE = 3.7502 ' / in.	CHECKED - PA	REVISED -	
PLOT DATE = 1/12/2016 1:58:58 PM	DATE - 12/7/2015	REVISED -	

CMT
License No. 184-000613
©Copyright CMT, Inc.

STATE OF ILLINOIS
DEPARTMENT OF TRANSPORTATION

NORTH ABUTMENT
WASHINGTON STREET

SCALE: | SHEET 15 OF 28 SHEETS | STA. TO STA.

F.A.U. RTE.	SECTION	COUNTY	TOTAL SHEETS	SHEET NO.
2552	14-00161-00-BR	WILL	86	51

CONTRACT NO. 61C38

ILLINOIS FED. AID PROJECT DPC-M-4003(356)

FILE NAME = L:\Naperville\15238-01_Washington\Ph2\Drawings\CADD_Sheets\S-15 North Abutment.dgn

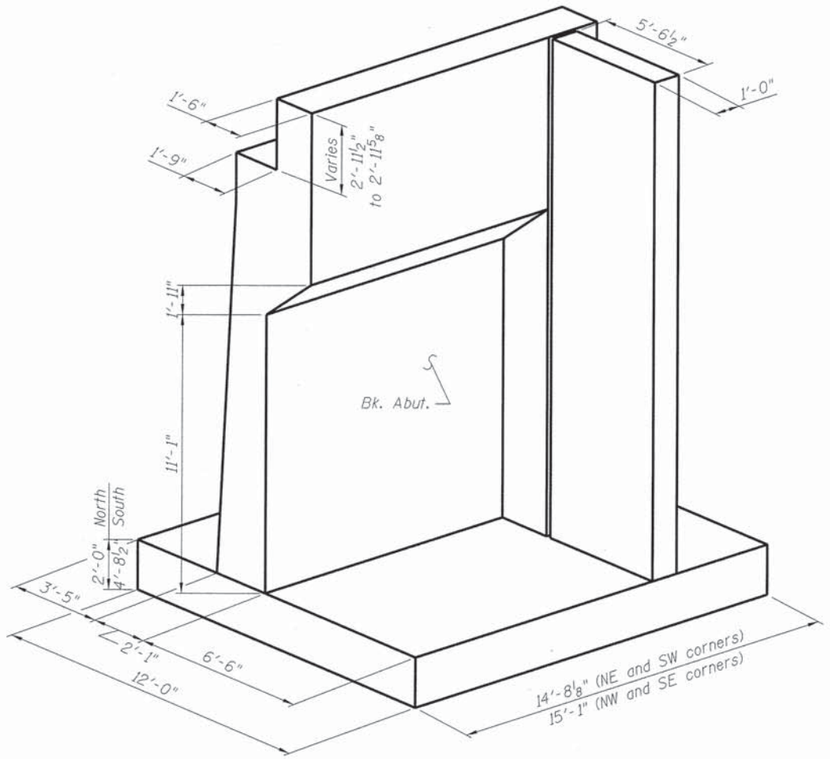

ABUTMENT ISOMERIC VIEW

(All four corners similar)

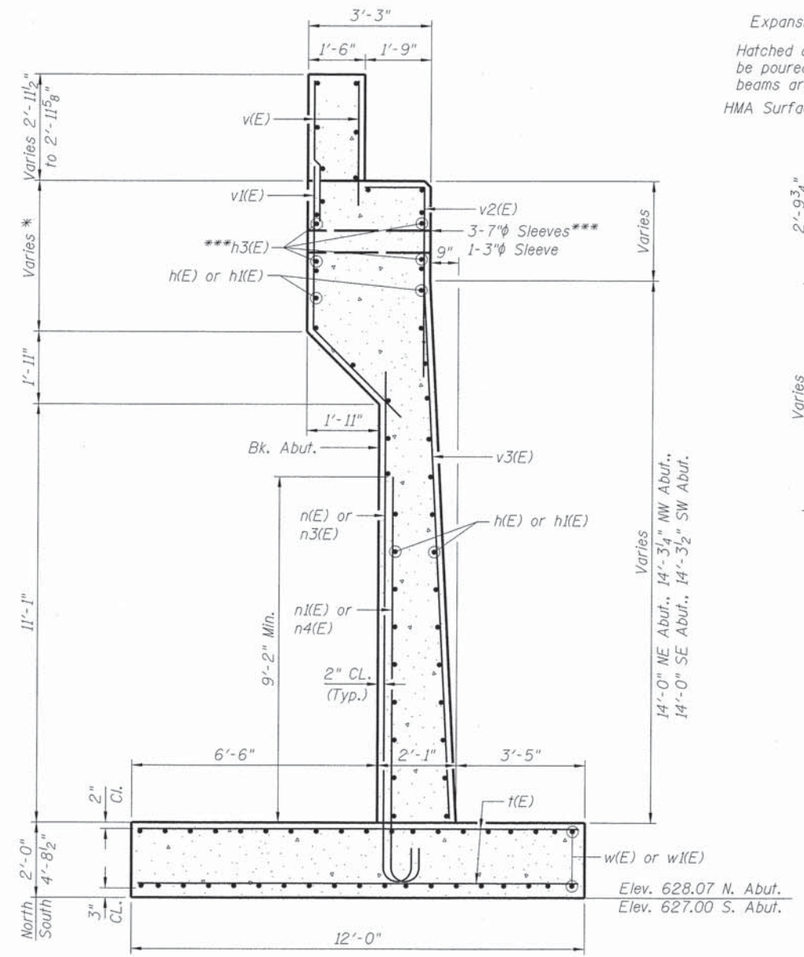

* 4'-7½" to 4'-7¾" NW Abut.,
3'-10½" to 4'-0⅜" NE Abut.,
3'-11" to 4'-1" SE Abut.,
4'-7⅞" to 4'-8¼" SW Abut.

*** At Northeast and Southeast abutments only

SECTION THRU ABUTMENT

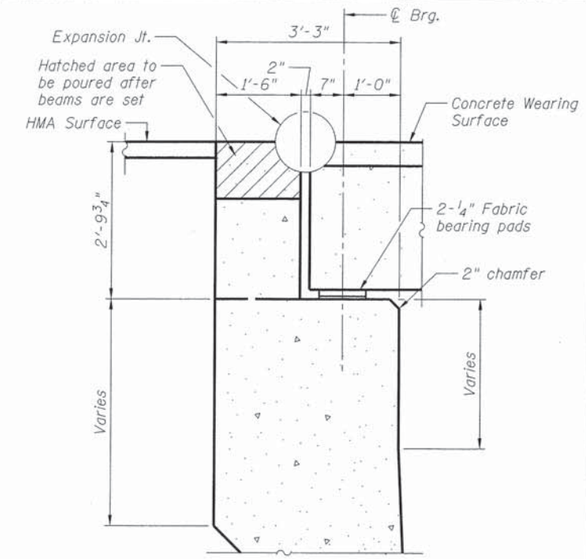

ABUTMENT DETAIL

BILL OF MATERIAL

Bar	No.	Size	Length	Shape
d10(E)	320	#5	2'-0"	
d11(E)	134	#5	2'-3"	
h(E)	84	#5	11'-10"	
h1(E)	84	#5	11'-7"	
h2(E)	56	#5	5'-7"	
h3(E)	8	#5	7'-6"	
n(E)	20	#7	14'-5"	
n1(E)	26	#9	12'-1"	
n2(E)	6	#7	17'-7"	
n3(E)	20	#7	17'-2"	
n4(E)	26	#9	14'-11"	
n5(E)	6	#7	20'-4"	
t(E)	184	#7	14'-4"	
v(E)	104	#5	4'-9"	
v1(E)	52	#5	7'-9"	
v2(E)	52	#5	7'-3"	
v3(E)	52	#4	14'-2"	
w(E)	76	#7	14'-9"	
w1(E)	76	#7	14'-6"	

Concrete Removal	Cu. Yd.	203.5
Structure Excavation	Cu. Yd.	111.4
Cofferdam Excavation	Cu. Yd.	90.4
Concrete Structures	Cu. Yd.	192.1
Reinforcement Bars, Epoxy Coated	Pound	19,330
Concrete Sealer	Sq. Ft.	21
Epoxy Crack Injection	Foot	60
Structural Repair of Concrete (Depth Equal To Or Less Than 5 Inches)	Sq. Ft.	21
Granula Backfill for Structures	Cu. Yd.	156
Geocomposite Wall Drain	Sq. Yd.	68
Drill and Grout Dowel Bars	Each	454

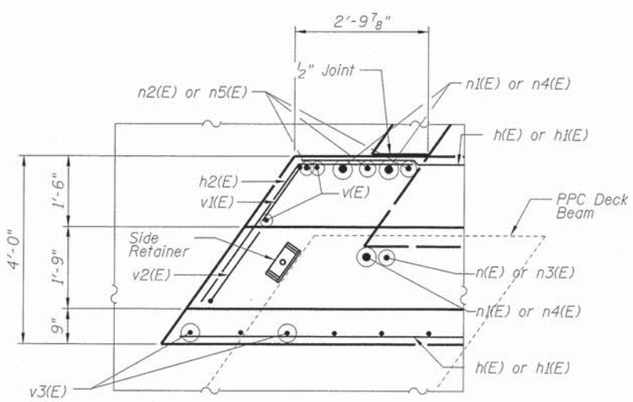

CORNER DETAIL

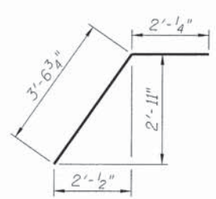

BAR h2(E)

BAR	D	E	F
n(E)	13'-7"	10"	7"
n1(E)	10'-10"	1'-3'	11¾"
n2(E)	16'-9"	10"	7"
n3(E)	16'-4"	10"	7"
n4(E)	13'-8"	1'-3"	11¾"
n5(E)	19'-6"	10"	7"

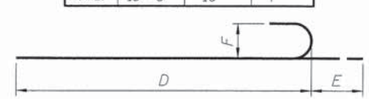

BARS n(E) THRU n5(E)

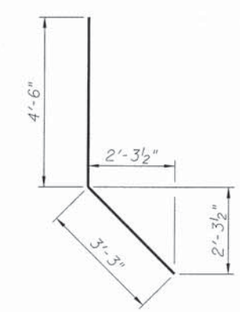

BAR v1(E)

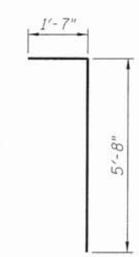

BAR v2(E)

FILE NAME = L:\Naperville\15238-01_Washington\Ph2\Draw\C401_Sheets\S-16 Abutment Details.dgn

CMT
License No. 184-000613 ©Copyright CMT, Inc.

USER NAME = Peter Ross	DESIGNED - PA	REVISED -	
	DRAWN - DH	REVISED -	
PLOT SCALE = 2.0001 ' / in.	CHECKED - PA	REVISED -	
PLOT DATE = 1/12/2016 1:58:59 PM	DATE - 12/7/2015	REVISED -	

STATE OF ILLINOIS
DEPARTMENT OF TRANSPORTATION

ABUTMENT DETAILS
WASHINGTON STREET

SCALE: | SHEET 16 OF 28 SHEETS | STA. TO STA.

F.A.U. RTE.	SECTION	COUNTY	TOTAL SHEETS	SHEET NO.
2552	14-00161-00-BR	WILL	86	52

CONTRACT NO. 61C38

ILLINOIS | FED. AID PROJECT DPC-M-4003(356)

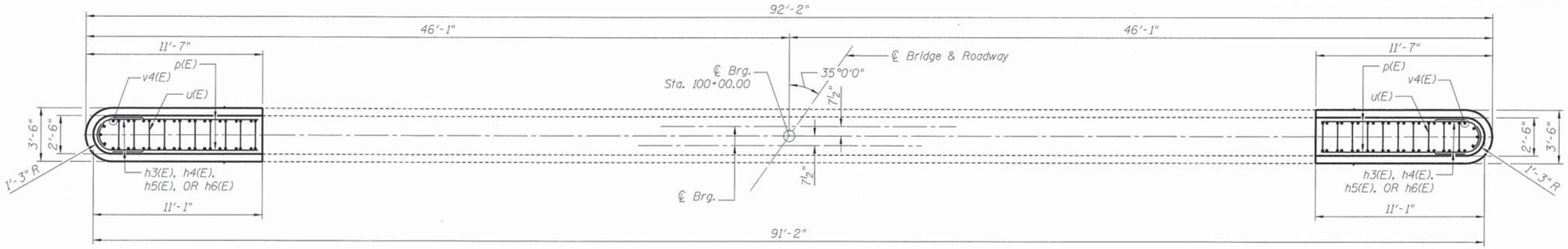

PIER PLAN - TOP

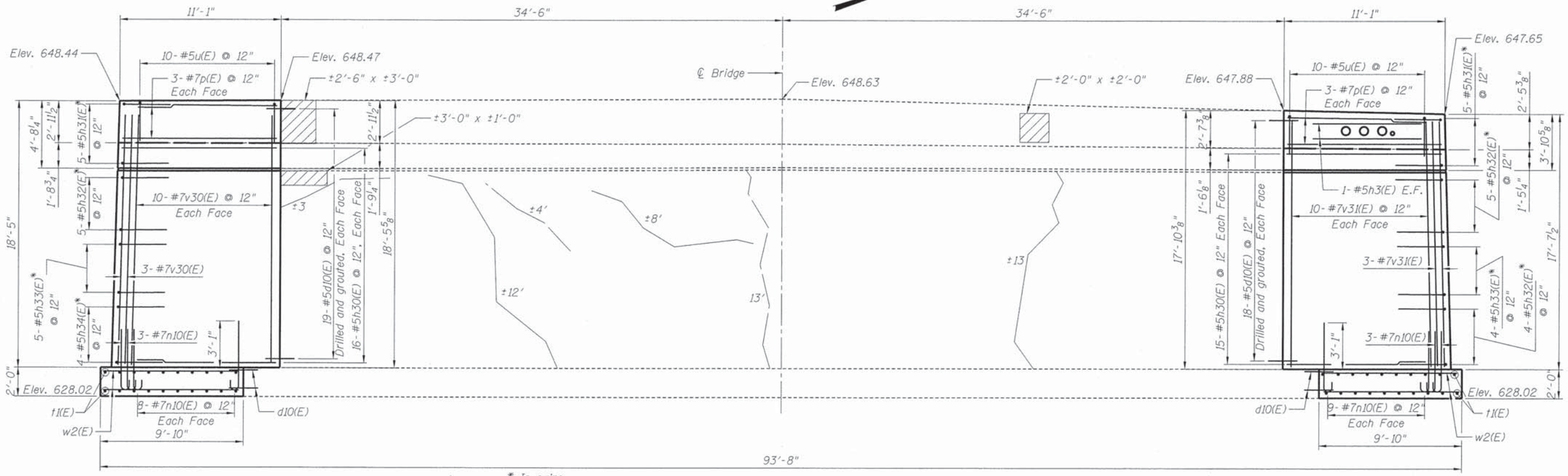

ELEVATION

(Looking North)

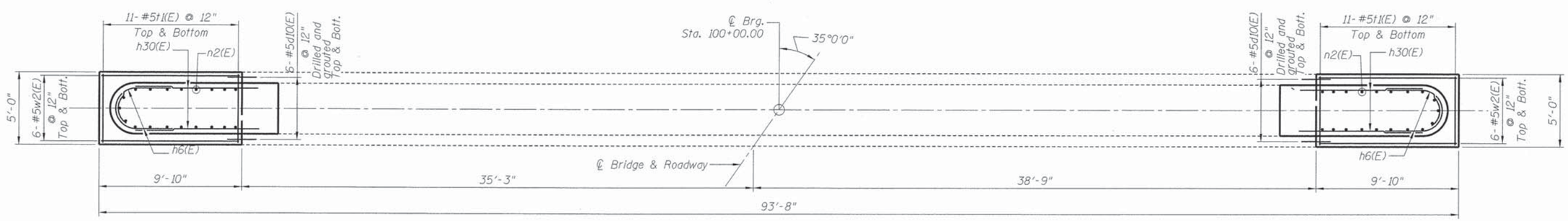

PIER PLAN - FOOTING

LEGEND

Structural Repair of Concrete (Depth equal to or less than 5 inches)

—— Epoxy Crack Injection (North Face)

—— Epoxy Crack Injection (South Face)

FILE NAME = L:\Naperville\15238-BL_WashingtonPh2\D-aw\CADD_Sheets\S-17 Pier Plan & Elevation.dgn

CMT
License No. 184-000613 ©Copyright CMT, Inc.

USER NAME = Peter Ross	DESIGNED - PA	REVISED -	
	DRAWN -	REVISED -	
PLOT SCALE = 3.7502 ' / in.	CHECKED - PA	REVISED -	
PLOT DATE = 1/12/2016 1:59:00 PM	DATE - 12/7/2015	REVISED -	

STATE OF ILLINOIS
DEPARTMENT OF TRANSPORTATION

PIER PLAN & ELEVATION
WASHINGTON STREET

SCALE: | SHEET 17 OF 28 SHEETS | STA. | TO STA.

F.A.U. RTE.	SECTION	COUNTY	TOTAL SHEETS	SHEET NO.
2552	14-00161-00-BR	WILL	86	53

CONTRACT NO. 61C38

ILLINOIS FED. AID PROJECT DPC-M-4003(356)

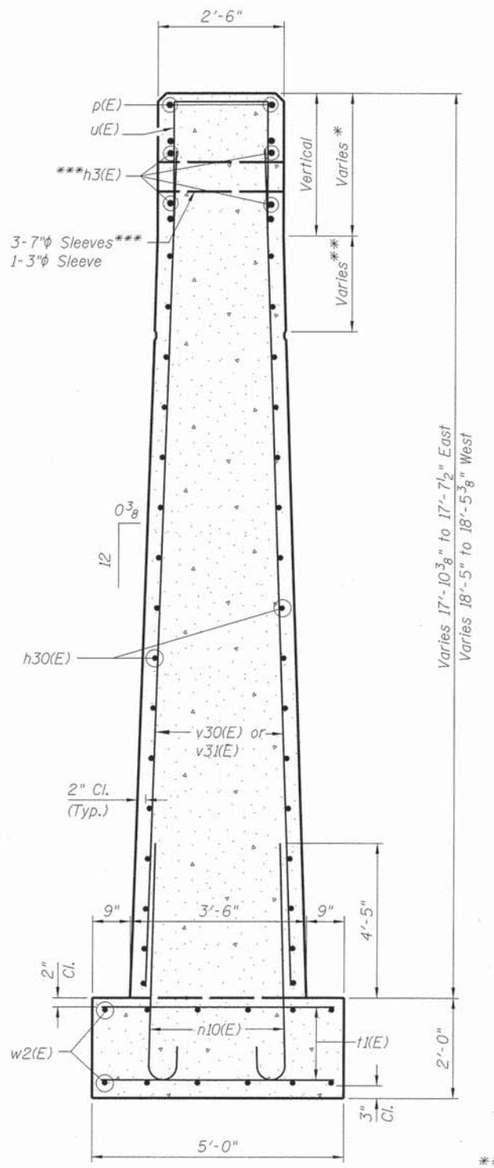

SECTION THRU PIER

* 2'-6 1/2" to 2'-7 1/4" East
2'-11 3/8" to 3'-1/8" West

** 1'-5 1/2" to 1'-6" East
1'-9 1/8" to 1'-9 3/4" West

*** At north end only

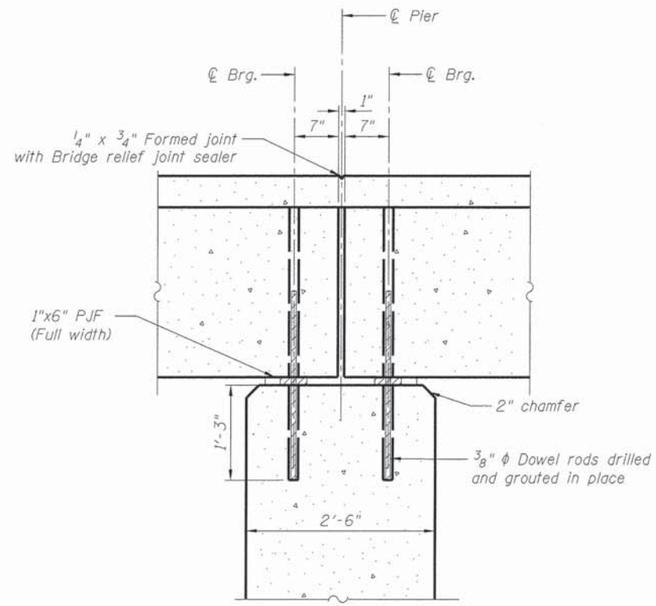

PIER DETAIL

BAR	A	R
h31(E)	1'-8 3/8"	1'-1"
h32(E)	1'-11 1/2"	1'-3"
h33(E)	2'-2 3/4"	1'-5"
h34(E)	2'-5 7/8"	1'-7"

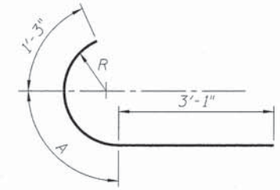

BARS h31(E) THRU h34(E)

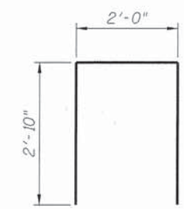

BAR u(E)

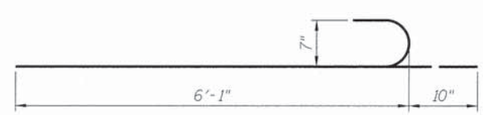

BAR n10(E)

BILL OF MATERIAL

Bar	No.	Size	Length	Shape
d10(E)	98	#5	2'-0"	
h3(E)	4	#5	7'-6"	
h30(E)	62	#5	9'-8"	
h31(E)	20	#5	6'-0"	
h32(E)	20	#5	6'-4"	
h33(E)	18	#5	6'-8"	
h34(E)	16	#5	6'-10"	
n10(E)	38	#7	6'-11"	
p(E)	12	#7	9'-8"	
t1(E)	44	#5	4'-8"	
u(E)	20	#5	7'-8"	
v30(E)	23	#7	17'-4"	
v31(E)	23	#7	16'-8"	
w2(E)	24	#5	9'-6"	
Structure Excavation		Cu. Yd.	55.2	
Cofferdam Excavation		Cu. Yd.	33.8	
Concrete Structures		Cu. Yd.	51.9	
Concrete Removal		Cu. Yd.	4.9	
Reinforcement Bars, Epoxy Coated		Pound	4,320	
Granular Backfill for Structures		Cu. Yd.	42	
Concrete Sealer		Sq. Ft.	15	
Epoxy Crack Injection		Foot	53	
Structural Repair of Concrete (Depth Equal To Or Less Than 5 Inches)		Sq. Ft.	15	
Drill and Grout Dowel Bars		Each	98	

FILE NAME = L:\Naperville\15238-01_Washington\Ph2\Dwg\CADD_Sheets\S-18 Pier Details.dgn

CMT
License No. 184-000613

USER NAME = Peter Ross	DESIGNED - PA	REVISED -
	DRAWN - DH	REVISED -
PLOT SCALE = 1.5001 ' / in.	CHECKED - PA	REVISED -
PLOT DATE = 1/12/2016 1:59:01 PM	DATE - 12/7/2015	REVISED -

STATE OF ILLINOIS
DEPARTMENT OF TRANSPORTATION

PIER DETAILS
WASHINGTON STREET

SCALE: | SHEET 18 OF 28 SHEETS | STA. TO STA.

F.A.U. RTE.	SECTION	COUNTY	TOTAL SHEETS	SHEET NO.
2552	14-00161-00-BR	WILL	86	54

CONTRACT NO. 61C38

ILLINOIS FED. AID PROJECT DPC-M-4003(356)

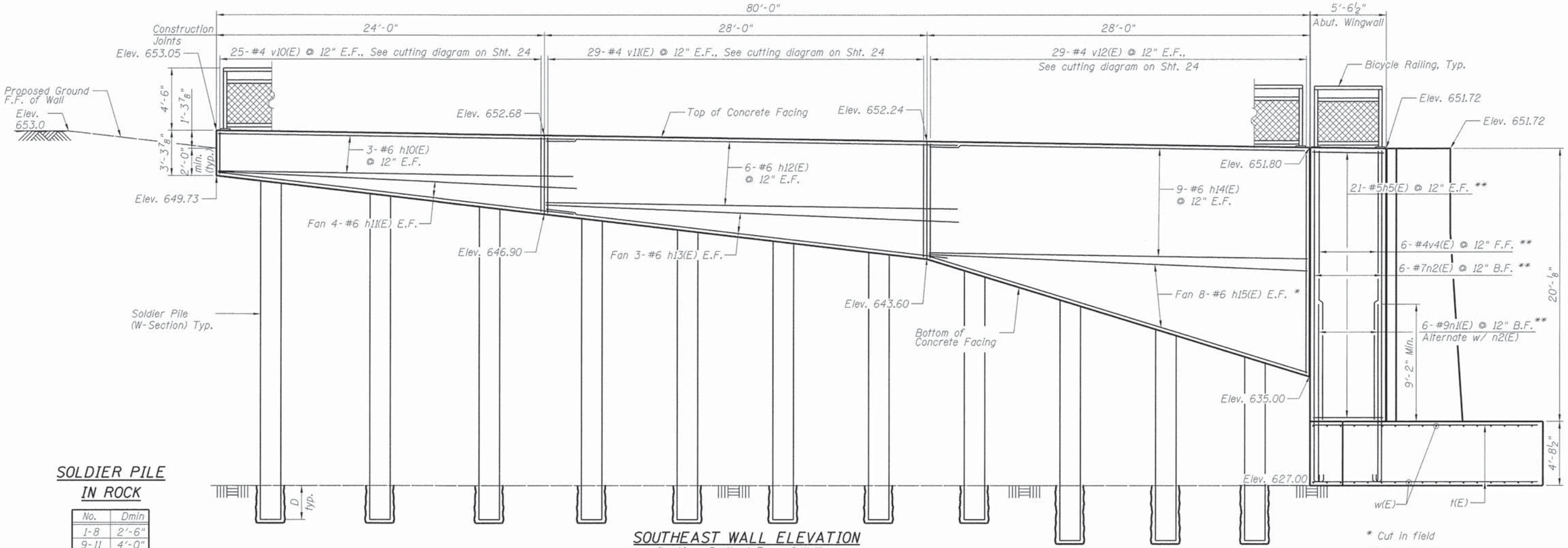

SOUTHEAST WALL ELEVATION

(Looking South at Face of Wall)

SOLDIER PILE IN ROCK

No.	Dmin
1-8	2'-6"
9-11	4'-0"

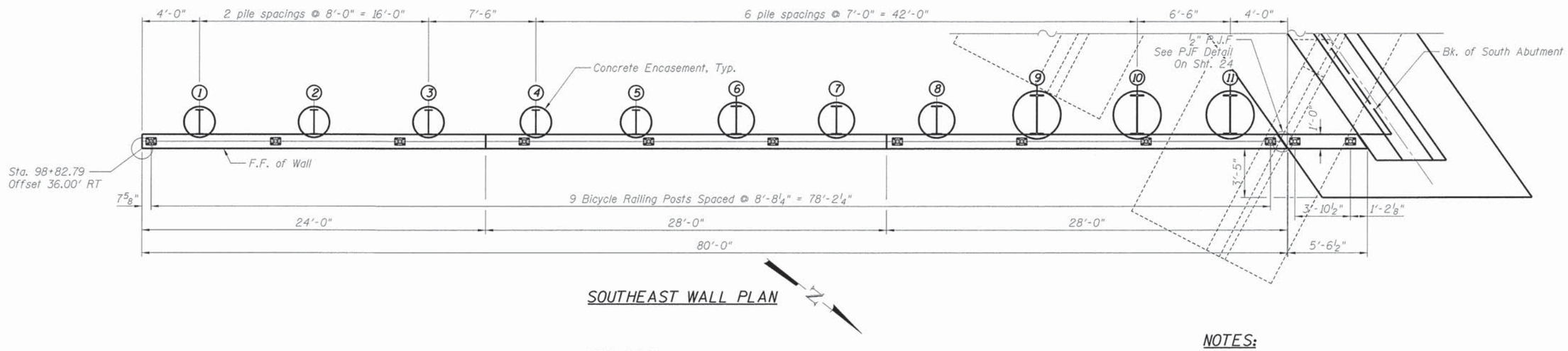

SOUTHEAST WALL PLAN

MIN. LAP

#6 Bars = 4'-4"

NOTES:

1. For abutment wingwall bar details and Bill of Materials see sheet 16 of 28.
2. Offsets are measured from ℄ Rdwy. Dimensions are along the F.F. of the Wall.

FILE NAME = L:\Naperville\152381_Washington\Ph2\Draw\CADD_Sheets\S-19 SE Wall.dgn

CMT
Location No. 184-000613 © Copyright CMT, Inc.

USER NAME = Peter Ross	DESIGNED - PA	REVISED -	
	DRAWN - DH	REVISED -	
PLOT SCALE = 3.7582 ' / in.	CHECKED - PA	REVISED -	
PLOT DATE = 12/12/2015 11:14:37 AM	DATE - 12/7/2015	REVISED -	

STATE OF ILLINOIS
DEPARTMENT OF TRANSPORTATION

SOUTHEAST WALL
WASHINGTON STREET

SCALE: | SHEET 19 OF 28 SHEETS | STA. | TO STA.

F.A.U. RTE.	SECTION	COUNTY	TOTAL SHEETS	SHEET NO.
2552	14-00161-00-BR	WILL	86	55

CONTRACT NO. 61C38

ILLINOIS FED. AID PROJECT DPC-M-4003(356)

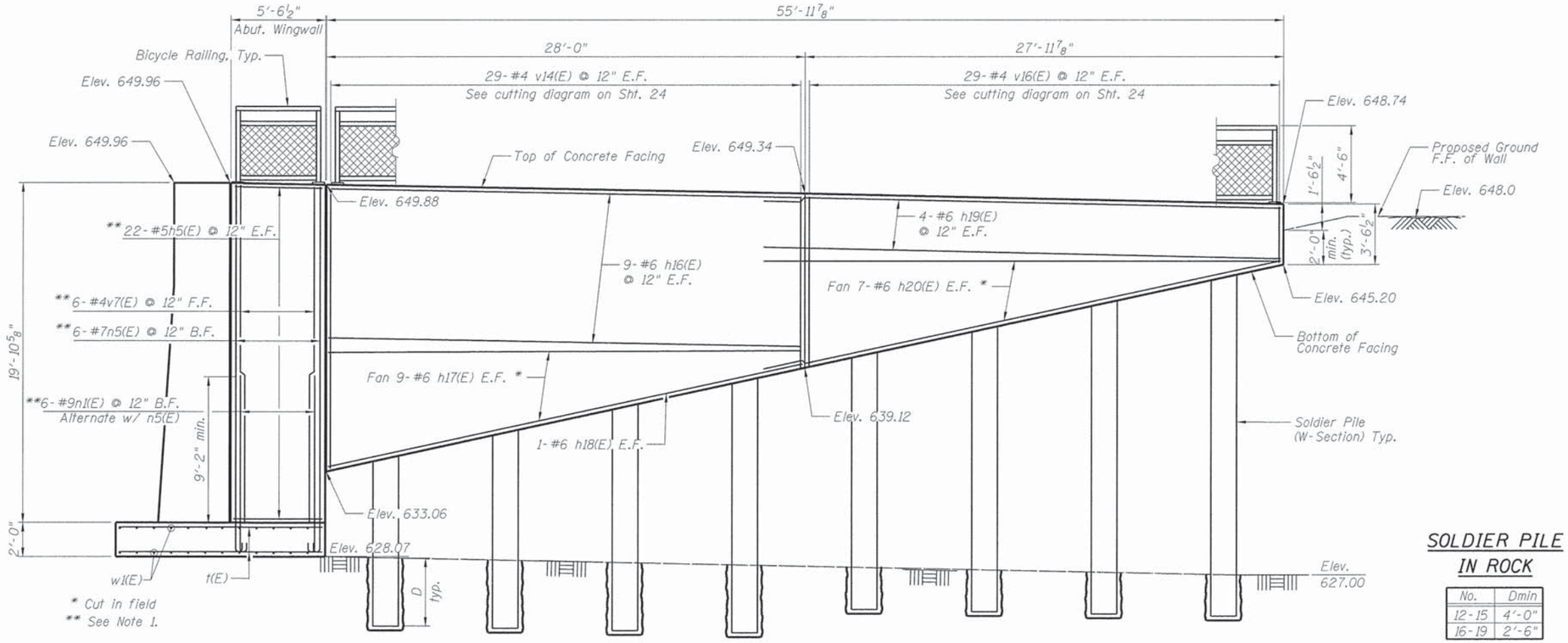

NORTHEAST WALL ELEVATION

(Looking South at Front Face of Wall)

SOLDIER PILE IN ROCK

No.	Dmin
12-15	4'-0"
16-19	2'-6"

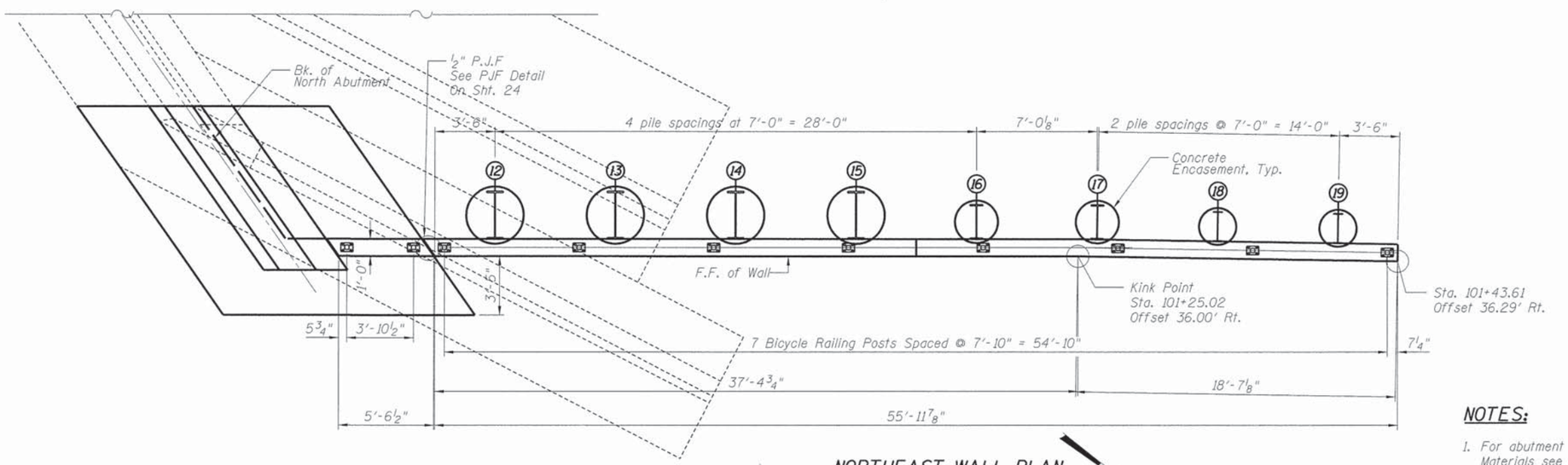

NORTHEAST WALL PLAN

MIN. LAP

#6 Bars = 4'-4"

NOTES:

1. For abutment wingwall bar details and Bill of Materials see sheet 16 of 28.
2. Offsets are measured from ℄ Rdwy. Dimensions are along the F.F. of the Wall.

FILE NAME = L:\Naperville\15238-01_Washington Ph2\Drawings\CADD_Sheets\S-20 NE Wall.dgn

CMT
License No. 184-000613 ©Copyright CMT, Inc.

USER NAME = Peter Ross	DESIGNED - PA	REVISED -
	DRAWN - DH	REVISED -
PLOT SCALE = 3.7502 ' / in.	CHECKED - PA	REVISED -
PLOT DATE = 12/12/2015 11:14:38 AM	DATE - 12/7/2015	REVISED -

STATE OF ILLINOIS
DEPARTMENT OF TRANSPORTATION

NORTHEAST WALL
WASHINGTON STREET

SCALE: | SHEET 20 OF 28 SHEETS | STA. | TO STA.

F.A.U. RTE.	SECTION	COUNTY	TOTAL SHEETS	SHEET NO.
2552	14-00161-00-BR	WILL	86	56

CONTRACT NO. 61C38

ILLINOIS FED. AID PROJECT DPC-M-4003(356)

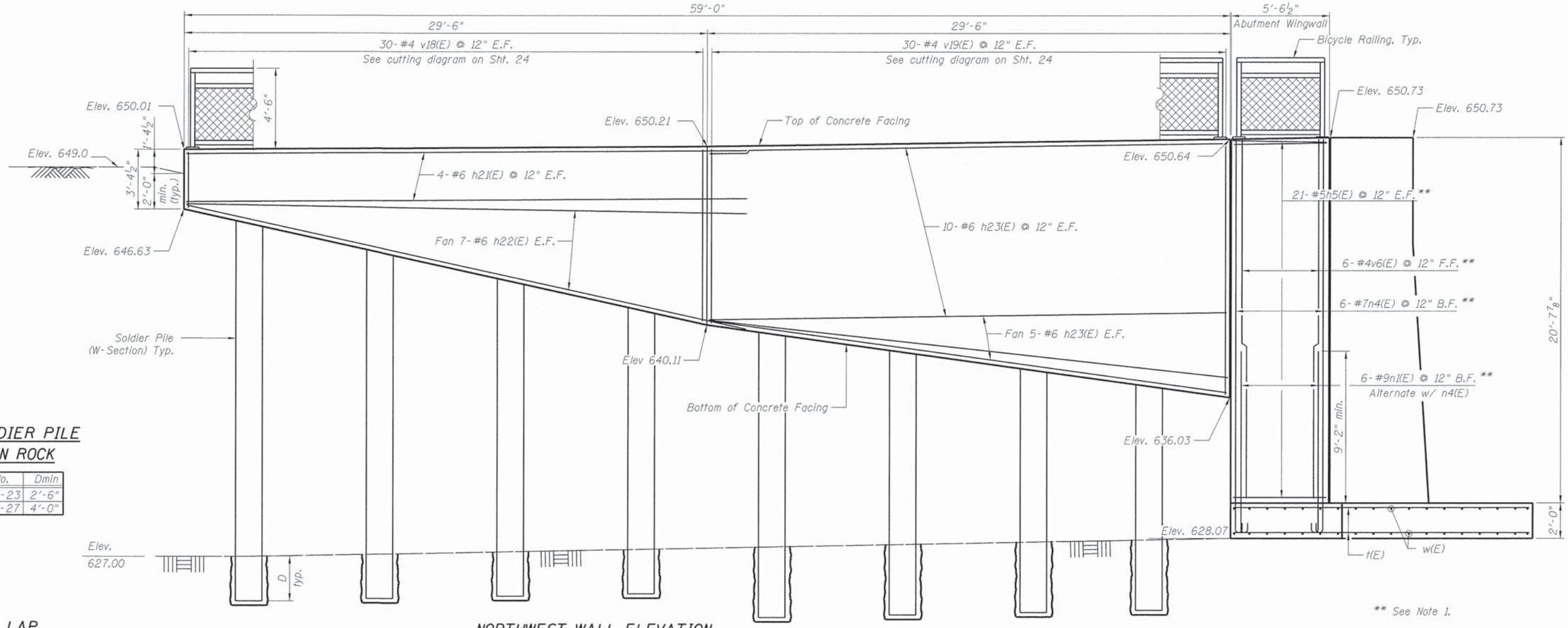

SOLDIER PILE IN ROCK

No.	Dmin
20-23	2'-6"
24-27	4'-0"

MIN. LAP

#6 Bars = 4'-4"

NORTHWEST WALL ELEVATION

(Looking North at Front Face of Wall)

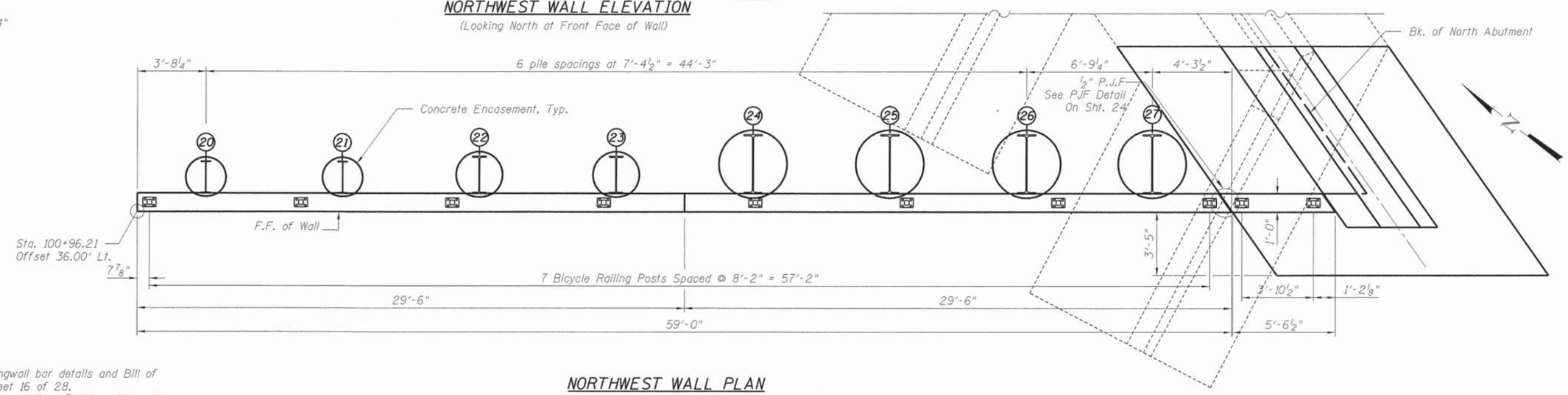

NORTHWEST WALL PLAN

NOTES:

1. For abutment wingwall bar details and Bill of Materials see sheet 16 of 28.
2. Offsets are measured from ℄ Rdwy. Dimensions are along the F.F. of the Wall.

FILE NAME = L:\Naperville\15238-01_Washington Ph2\Draw\CADD_Sheets\S-21 NW Wall.dgn

CMT	USER NAME = Peter Ross	DESIGNED - PA	REVISED -
		DRAWN - DH	REVISED -
	PLOT SCALE = 3.0001 ' / in.	CHECKED - PA	REVISED -
	PLOT DATE = 12/12/2015 11:14:39 AM	DATE - 12/7/2015	REVISED -

STATE OF ILLINOIS
DEPARTMENT OF TRANSPORTATION

NORTHWEST WALL
WASHINGTON STREET

SCALE: | SHEET 21 OF 28 SHEETS | STA. | TO STA.

F.A.U. RTE.	SECTION	COUNTY	TOTAL SHEETS	SHEET NO.
2552	14-00161-00-BR	WILL	86	57

CONTRACT NO. 61C38

ILLINOIS FED. AID PROJECT DPC-M-4003(356)

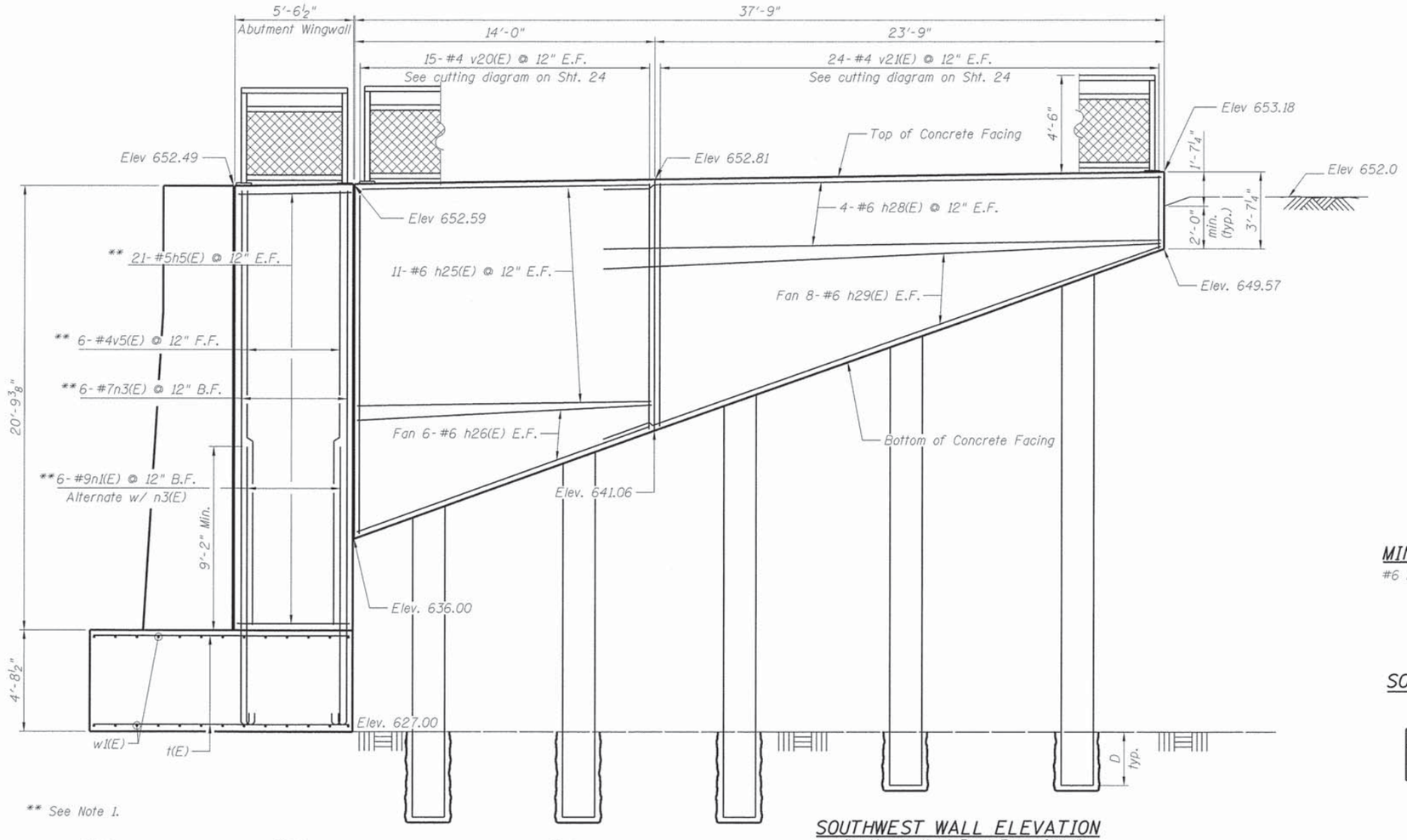

SOUTHWEST WALL ELEVATION
(Looking North at Front Face of Wall)

MIN. LAP
#6 Bars = 4'-4"

SOLDIER PILE IN ROCK

No.	Dmin
28-30	4'-0"
31-32	2'-6"

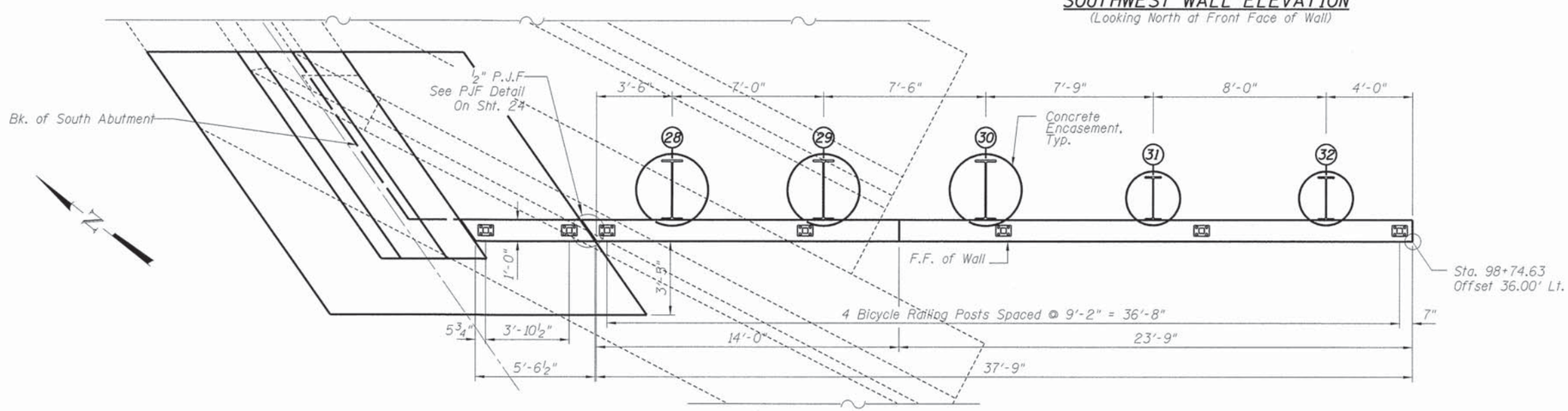

SOUTHWEST WALL PLAN

NOTES:

1. For abutment wingwall bar details and Bill of Materials see sheet 16 of 28.
2. Offsets are measured from ℄ Rdwy. Dimensions are along the F.F. of the Wall.

FILE NAME = L:\Naperville\15238-01_WashingtonPh2\Dwg\G400_Sheets\S-22 SW Wall.dgn

CMT
License No. 184-000613 ©Copyright CMT, Inc.

USER NAME = Peter Ross	DESIGNED - PA	REVISED -
	DRAWN - DH	REVISED -
PLOT SCALE = 3.0001 ' / in.	CHECKED - PA	REVISED -
PLOT DATE = 12/12/2015 11:14:40 AM	DATE - 12/7/2015	REVISED -

STATE OF ILLINOIS
DEPARTMENT OF TRANSPORTATION

SOUTHWEST WALL
WASHINGTON STREET

SCALE: | SHEET 22 OF 28 SHEETS | STA. | TO STA.

F.A.U. RTE.	SECTION	COUNTY	TOTAL SHEETS	SHEET NO.
2552	14-00161-00-BR	WILL	86	58

CONTRACT NO. 61C38

ILLINOIS FED. AID PROJECT DPC-M-4003(356)

SOLDIER PILE DATA

LOCATION	SOLDIER PILE DESIGNATION	STATION	PILE SIZE	OFFSET TO WORKING POINT	TOP OF PILE ELEVATION	ESTIMATED LENGTH OF SOLDIER PILE (FT)	NUMBER OF SHEAR CONNECTORS	ENCASEMENT DIAMETER (IN.)	TOP OF ENCASEMENT CONCRETE ELEVATION	ENCASEMENT LENGTH (FT)
Southeast Wall	1	98+86.79	W21x44	34.14' RT.	650.82	26.32	3	30	649.25	22.25
	2	98+94.79	W21x44	34.14' RT.	650.70	26.20	3	30	648.31	21.31
	3	99+02.79	W21x44	34.14' RT.	650.57	26.07	4	30	647.37	20.37
	4	99+10.29	W21x44	34.14' RT.	650.46	25.96	5	30	646.49	19.49
	5	99+17.29	W21x44	34.14' RT.	650.35	25.85	6	30	645.66	18.66
	6	99+24.29	W24x84	33.40' RT.	650.24	25.74	12	30	644.84	17.84
	7	99+31.29	W24x84	33.40' RT.	650.13	25.63	14	30	644.01	17.01
	8	99+38.29	W24x84	33.40' RT.	650.02	25.52	16	30	642.53	15.53
	9	99+45.29	W33x141	33.61' RT.	649.91	26.91	22	42	640.38	13.38
	10	99+52.29	W33x141	33.61' RT.	649.80	26.80	26	42	638.23	11.23
	11	99+58.79	W33x141	33.61' RT.	649.70	26.70	28	42	636.22	9.22
Northeast Wall	12	100+91.12	W33x141	33.61' RT.	647.65	23.58	30	42	633.88	5.81
	13	100+98.12	W33x141	33.61' RT.	647.52	23.60	26	42	635.39	7.47
	14	101+05.12	W33x141	33.61' RT.	647.39	23.63	22	42	636.89	9.13
	15	101+12.12	W33x141	33.61' RT.	647.26	23.65	20	42	638.40	10.79
	16	101+19.12	W24x84	34.00' RT.	647.12	22.16	16	30	639.90	12.44
	17	101+26.15	W24x84	34.01' RT.	646.97	22.16	14	30	641.41	14.10
	18	101+33.14	W21x44	34.27' RT.	646.82	22.16	5	30	642.91	15.76
	19	101+40.14	W21x44	34.38' RT.	646.66	22.16	3	30	644.42	17.42
Northwest Wall	20	100+92.52	W21x44	34.14' LT.	647.87	23.37	3	30	645.81	18.81
	21	100+85.14	W21x44	34.14' LT.	647.92	23.26	5	30	644.19	17.04
	22	100+77.77	W24x84	34.00' LT.	647.97	23.16	12	30	642.57	15.26
	23	100+70.39	W24x84	34.00' LT.	648.02	23.05	16	30	640.95	13.49
	24	100+63.02	W40x149	33.41' LT.	648.10	24.48	18	48	639.64	12.02
	25	100+55.64	W40x149	33.41' LT.	648.20	24.43	22	48	638.63	10.86
	26	100+48.27	W40x149	33.41' LT.	648.31	24.38	24	48	637.63	9.70
	27	100+41.50	W40x149	33.41' LT.	648.42	24.35	26	48	636.75	8.68
Southwest Wall	28	99+08.88	W33x141	33.61' LT.	650.48	27.48	28	42	637.26	10.26
	29	99+01.88	W33x141	33.61' LT.	650.58	27.58	24	42	639.79	12.79
	30	98+94.38	W33x141	33.61' LT.	650.70	27.70	18	42	642.48	15.48
	31	98+86.63	W24x84	34.00' LT.	650.82	26.32	14	30	645.22	18.22
	32	98+78.63	W24x84	34.00' LT.	650.94	26.44	8	30	648.11	21.11

* Two rows of shear studs shown. Only one row of shear studs at W21X44 Piles.

** 3¼" at W21X44 Piles

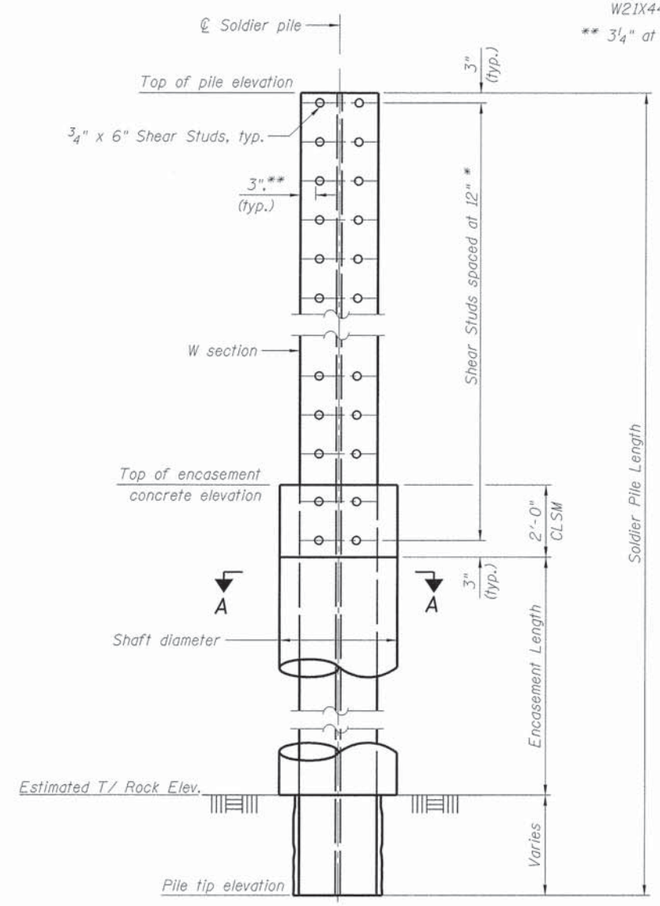

SOLDIER PILE ELEVATION AND SHEAR STUD CONNECTION DETAILS

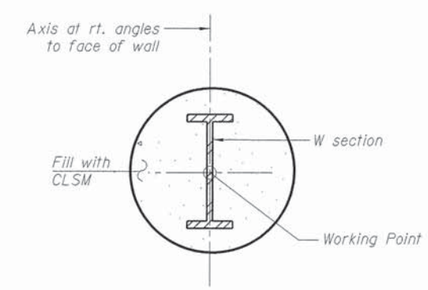

SECTION A-A

FILE NAME = L:\Naperville\15230-01_WashingtonPh2\Dwg\CADD_Sheets\S-23 Soldier Pile Wall Details.dgn

CMT License No. 184-000613 ©Copyright CMT, Inc.

USER NAME = Peter Ross	DESIGNED - PA	REVISED -	
	DRAWN - DH	REVISED -	
PLOT SCALE = 2.0001 ' / in.	CHECKED - PA	REVISED -	
PLOT DATE = 12/12/2015 11:14:40 AM	DATE - 12/7/2015	REVISED -	

STATE OF ILLINOIS
DEPARTMENT OF TRANSPORTATION

SOLDIER PILE WALL DETAILS - I
WASHINGTON STREET

SCALE: | SHEET 23 OF 28 SHEETS | STA. TO STA.

F.A.U. RTE.	SECTION	COUNTY	TOTAL SHEETS	SHEET NO.
2552	14-00161-00-BR	WILL	86	59

CONTRACT NO. 61C38

ILLINOIS FED. AID PROJECT DPC-M-4003(356)

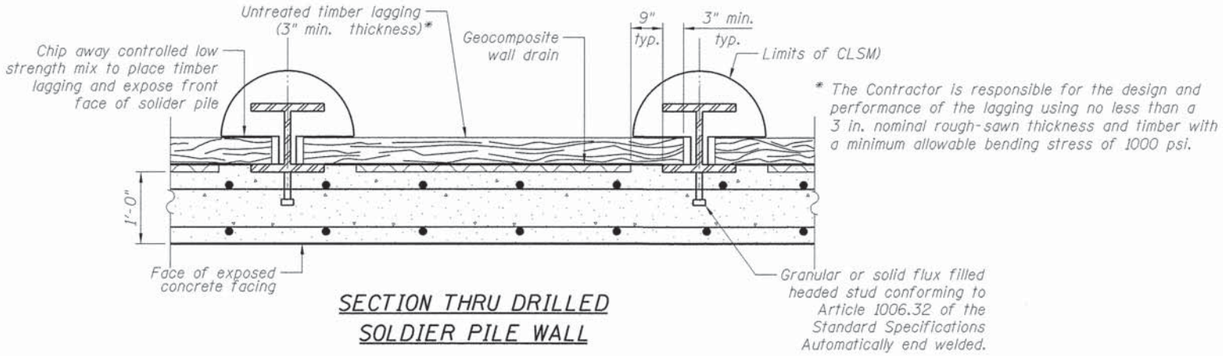

* The Contractor is responsible for the design and performance of the lagging using no less than a 3 in. nominal rough-sawn thickness and timber with a minimum allowable bending stress of 1000 psi.

SECTION THRU DRILLED SOLDIER PILE WALL

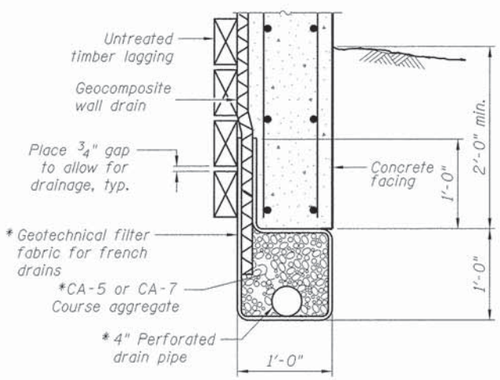

BETWEEN SOLDIER PILES

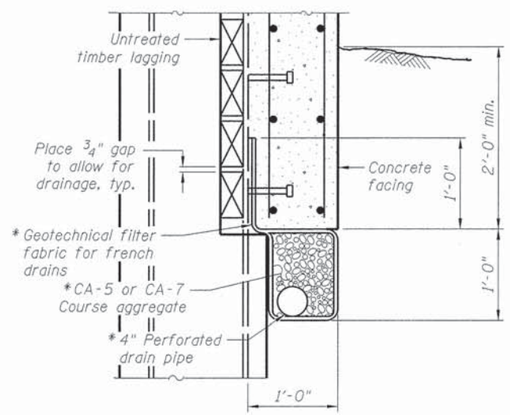

AT SOLDIER PILES

* Included in the cost of Pipe Underdrains for Structures.

PIPE UNDERDRAIN DETAIL FOR SOLDIER PILE WALLS

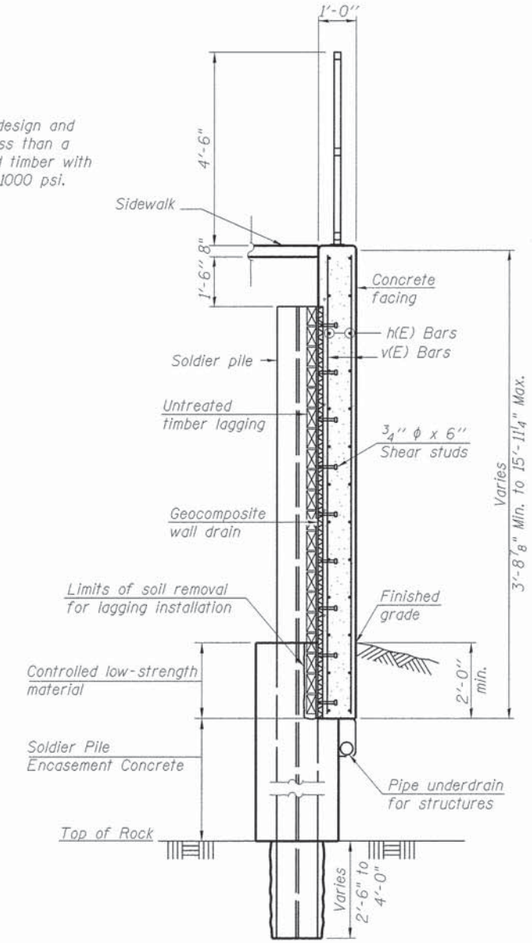

SECTION THRU SOLDIER PILE WALL

BILL OF MATERIAL

Bar	No.	Size	Length	Shape
h10(E)	6	#6	28'-2"	
h11(E)	8	#6	28'-4"	
h12(E)	12	#6	32'-2"	
h13(E)	6	#6	32'-5"	
h14(E)	18	#6	27'-7"	
h15(E)	16	#6	28'-11"	
h16(E)	18	#6	27'-8"	
h17(E)	18	#6	28'-3"	
h19(E)	8	#6	32'-4"	
h20(E)	14	#6	32'-10"	
h21(E)	8	#6	33'-8"	
h22(E)	14	#6	34'-6"	
h23(E)	30	#6	29'-2"	
h24(E)	2	#6	29'-5"	
h25(E)	22	#6	13'-10"	
h26(E)	12	#6	14'-8"	
h28(E)	8	#6	28'-1"	
h29(E)	16	#6	29'-5"	
v10(E)	25	#4	8'-3"	
v11(E)	29	#4	13'-7"	
v12(E)	29	#4	24'-7"	
v14(E)	29	#4	26'-2"	
v16(E)	29	#4	12'-11"	
v18(E)	30	#4	12'-8"	
v19(E)	30	#4	23'-10"	
v20(E)	15	#4	27'-6"	
v21(E)	24	#4	14'-7"	
Structure Excavation			Cu. Yd.	163.2
Concrete Structures			Cu. Yd.	80.8
Concrete Sealer			Sq. Ft.	1,661
Stud Shear Connectors			Each	493
Reinforcement Bars, Epoxy Coated			Pound	12,680
Drilling and Setting Soldier Piles (In Soil)			Cu. Ft.	3,633
Drilling and Setting Soldier Piles (In Soil)			Cu. Ft.	796
Furnishing Soldier Piles (W Section)			Foot	814
Geocomposite Wall Drain			Sq. Yd.	242
Pipe Underdrains for Structures, 4"			Foot	239
Untreated Timber Lagging			Sq. Ft.	1,680

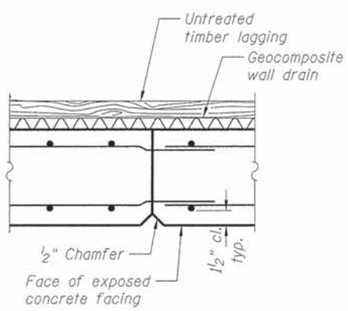

CONSTRUCTION JOINT

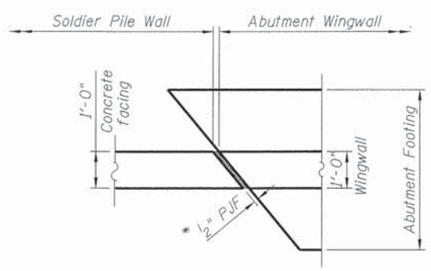

PJF DETAIL

* Cost included in Concrete Structures

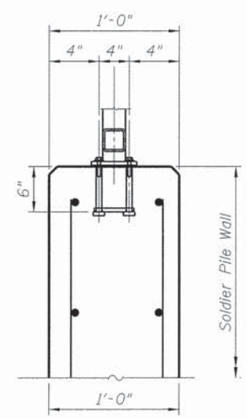

RAILING DETAIL

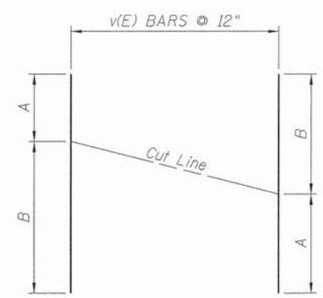

BAR	A	B
v10(E)	2'-11"	5'-4"
v11(E)	5'-4 1/2"	8'-2 1/2"
v12(E)	8'-3"	16'-4"
v14(E)	16'-4"	9'-10"
v16(E)	9'-9"	3'-2"
v18(E)	3'-1/8"	9'-7 7/8"
v19(E)	9'-8 1/2"	14'-1 1/2"
v20(E)	16'-1 1/2"	11'-4 1/2"
v21(E)	11'-3 1/8"	3'-3 7/8"

BAR CUTTING DIAGRAMS

NOTE: Order bars full length. Cut as shown and use remainder of bars in opposite face.

FILE NAME = L:\Naperville\15238-01.Washington\Ph2\Dr-aw\CADD.Sheets\S-24 Soldier Pile Wall Details II.dgn

CMT License No. 184-000613

USER NAME = Peter Ross	DESIGNED - PA	REVISED -
	DRAWN - DH	REVISED -
PLOT SCALE = 2.0001 ' / in.	CHECKED - PA	REVISED -
PLOT DATE = 12/12/2015 11:14:41 AM	DATE - 12/7/2015	REVISED -

STATE OF ILLINOIS
DEPARTMENT OF TRANSPORTATION

SOLDIER PILE WALL DETAILS – II
WASHINGTON STREET

SCALE: | SHEET 24 OF 28 SHEETS | STA. TO STA.

F.A.U. RTE.	SECTION	COUNTY	TOTAL SHEETS	SHEET NO.
2552	14-00161-00-BR	WILL	86	60

CONTRACT NO. 61C38

ILLINOIS FED. AID PROJECT DPC-M-4003(356)

When "A" is 3'-1" or less, the temporary concrete barrier shall be anchored to the new slab according to Detail I or Detail II. No anchorage is required when "A" is greater than 3'-1".

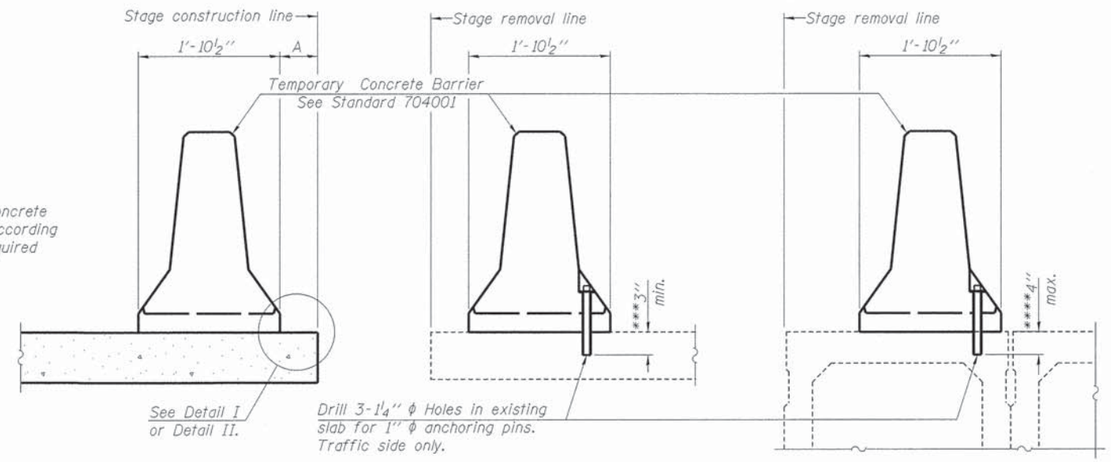

NEW SLAB

EXISTING SLAB

EXISTING DECK BEAM

SECTIONS THRU SLAB OR DECK BEAM

NOTES

Detail I - With Bar Splicer or Couplers:
Connect one (1) 1" x 7" x "W" steel PL to the top layer of couplers with 2-⅝" ϕ bolts screwed to coupler at approximate ℄ of each barrier panel.

Detail II - With Extended Reinforcement Bars:
Connect one (1) 1" x 7" x "W" steel PL to the concrete slab or concrete wearing surface with 2-⅝" ϕ Expansion Anchors or cast in place inserts spaced between the top layer of reinforcement at approximate ℄ of each barrier panel.

Cost of retainer assembly is included with Temporary Concrete Barrier.

The 1" x 7" x "W" plate shall not be removed until stage II construction forms and all reinforcement bars are in place and the concrete is ready to be placed.

*** Dimension shown is minimum required embedment into concrete. If hot-mix asphalt wearing surface is present, minimum embedment shall be in addition to wearing surface depth.

**** If existing deck beam is to remain in place after stage construction, embedment shall only be into wearing surface and not into existing deck beam concrete.

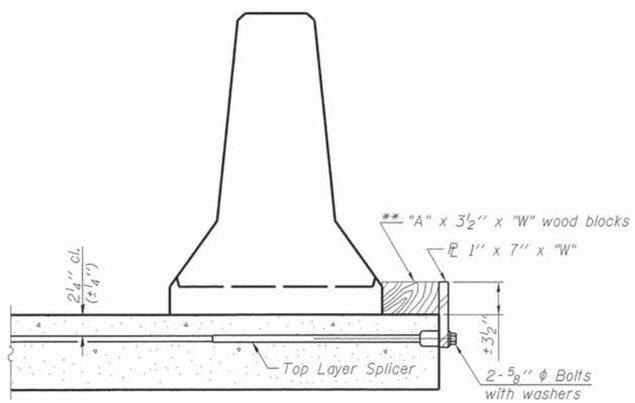

DETAIL I

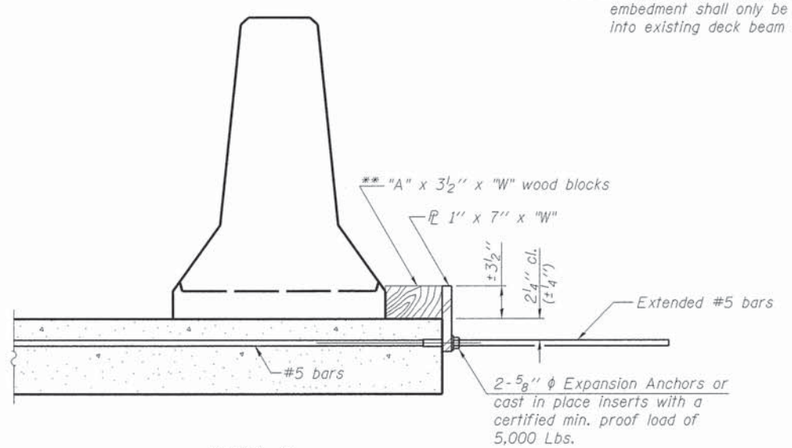

DETAIL II

RETAINER ASSEMBLY

** Wood blocks may be omitted when required to provide minimum stage traffic lane width. When the wood blocks are omitted, the concrete barrier shall be in direct contact with the steel retainer plate.

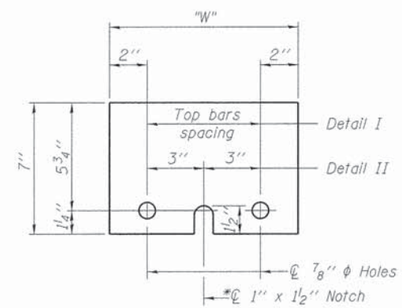

STEEL RETAINER PL 1" x 7" x "W"

* Required only with Detail II

FILE NAME = L:\Naperville\15230-81_Washington Ph2\Dwg\C400_Sheets\S-25 Temporary Concrete Barrier Details.dgn

CMT	USER NAME = Peter Ross	DESIGNED - PA	REVISED -	STATE OF ILLINOIS DEPARTMENT OF TRANSPORTATION	TEMPORARY CONCRETE BARRIER DETAILS WASHINGTON STREET	F.A.U. RTE.	SECTION	COUNTY	TOTAL SHEETS / SHEET NO.
		DRAWN - DH	REVISED -			2552	14-00161-00-BR	WILL	86 / 61
	PLOT SCALE = 1.0000 ' / in.	CHECKED - PA	REVISED -					CONTRACT NO. 61C38	
License No. 184-000613	PLOT DATE = 12/12/2015 11:14:42 AM	DATE - 12/7/2015	REVISED -		SCALE: SHEET 25 OF 28 SHEETS STA. TO STA.		ILLINOIS FED. AID PROJECT DPC-M-4003(356)		

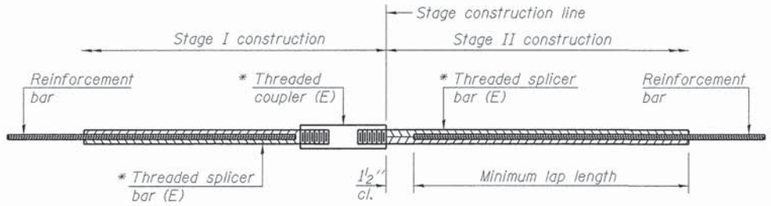

STANDARD BAR SPLICER ASSEMBLY

Threaded splicer bar length = min. lap length + 1½" + thread length

* Epoxy not required on Bar Splicer Assembly components used in conjunction with black bars.

Location	Bar size	No. assemblies required	Minimum lap length
Deck	#4	110	2'-7"

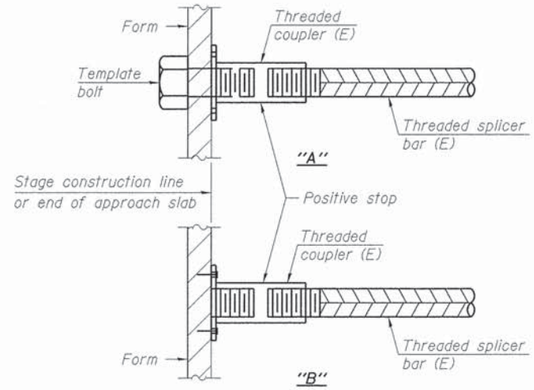

INSTALLATION AND SETTING METHODS

"A" : Set bar splicer assembly by means of a template bolt.
"B" : Set bar splicer assembly by nailing to wood forms or cementing to steel forms.
(E) : Indicates epoxy coating.

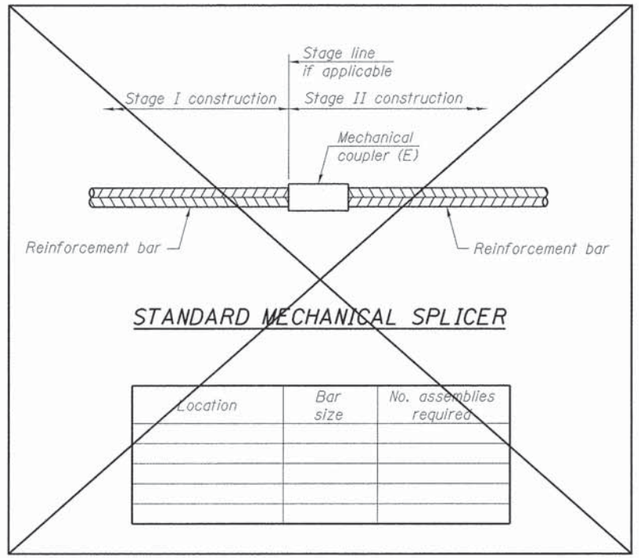

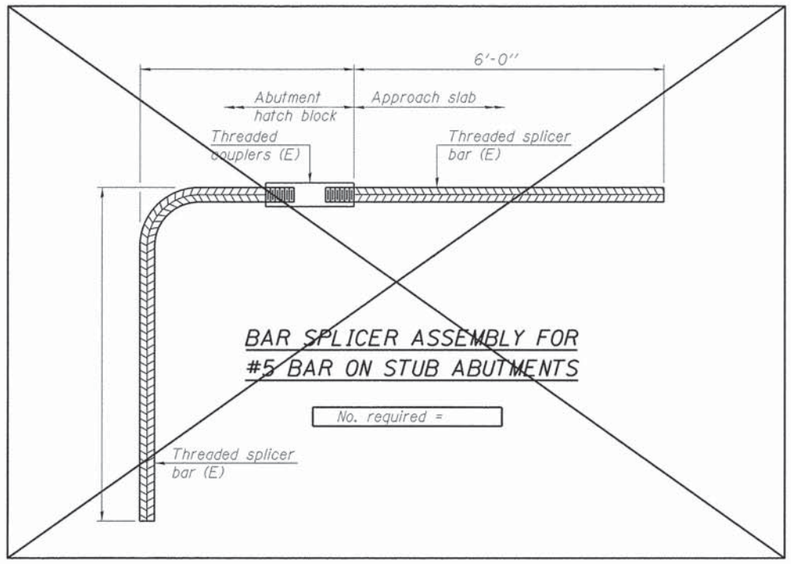

NOTES

Splicer bars shall be deformed with threaded ends and have a minimum 60 ksi yield strength.

All reinforcement shall be lapped and tied to the splicer bars.

Bar splicer assemblies shall be epoxy coated according to the requirements for reinforcement bars. See Section 508 of the Standard Specifications.

See approved list of bar splicer assemblies and mechanical splicers for alternatives.

FILE NAME = L:\Naperville\15238-01_WashingtonPh2\Dgn\CADD_Sheets\S-26 Bar Splicers Details.dgn

CMT
License No. 184-000613 ©Copyright CMT, Inc.

USER NAME = Peter Ross	DESIGNED - PA	REVISED -	
	DRAWN - DH	REVISED -	
PLOT SCALE = 1.0000 ' / in.	CHECKED - PA	REVISED -	
PLOT DATE = 12/12/2015 11:14:42 AM	DATE - 12/7/2015	REVISED -	

STATE OF ILLINOIS
DEPARTMENT OF TRANSPORTATION

BAR SPLICER ASSEMBLY DETAILS
WASHINGTON STREET

SCALE: | SHEET 26 OF 28 SHEETS | STA. | TO STA.

F.A.U. RTE.	SECTION	COUNTY	TOTAL SHEETS	SHEET NO.
2552	14-00161-00-BR	WILL	86	62
		CONTRACT NO. 61C38		
	ILLINOIS	FED. AID PROJECT DPC-M-4003(356)		

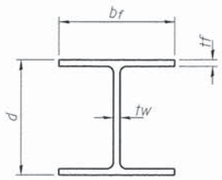

STEEL PILE TABLE

Designation	Depth d	Flange width b_f	Web thickness tw	Flange thickness tf
W21x44	$20\frac{5}{8}''$	$6\frac{1}{2}''$	$\frac{3}{8}''$	$\frac{7}{16}''$
W24x84	$24\frac{1}{8}''$	$9''$	$\frac{1}{2}''$	$\frac{3}{4}''$
W33x141	$33\frac{1}{4}''$	$11\frac{1}{2}''$	$\frac{5}{8}''$	$\frac{15}{16}''$
W40x149	$38\frac{1}{4}''$	$11\frac{3}{4}''$	$\frac{5}{8}''$	$\frac{13}{16}''$

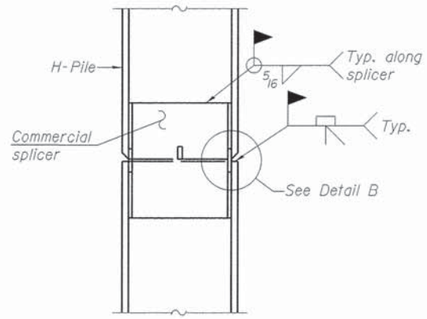

ELEVATION

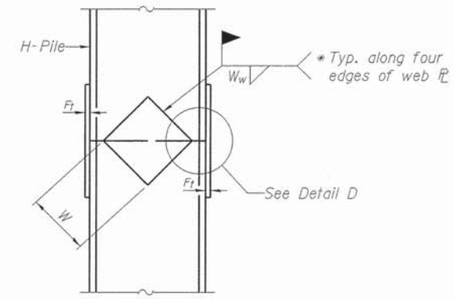

ELEVATION

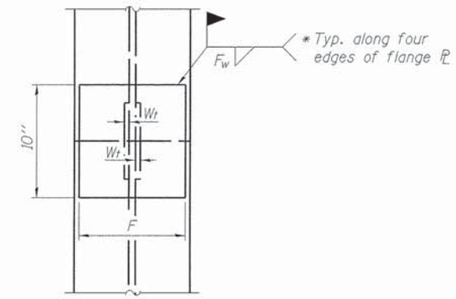

END VIEW

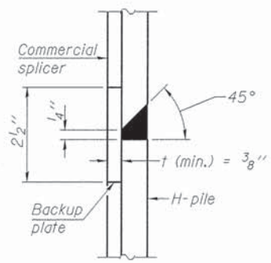

DETAIL "B"

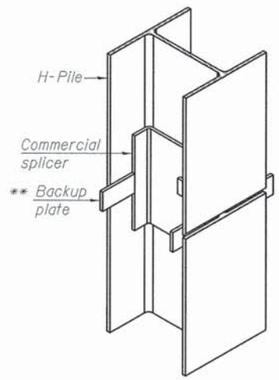

ISOMETRIC VIEW

WELDED COMMERCIAL SPLICE

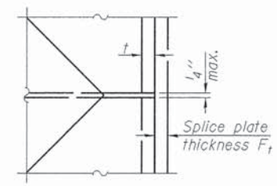

DETAIL D

Designation	F	F_t	F_w	W	W_t	W_w
W21x44	8"	$1\frac{1}{8}''$	$\frac{3}{4}''$	$14\frac{1}{2}''$	$\frac{1}{2}''$	$\frac{3}{8}''$
W24x84	8"	$1\frac{1}{8}''$	$\frac{3}{4}''$	$14\frac{1}{2}''$	$\frac{1}{2}''$	$\frac{3}{8}''$
W33x141	8"	$1\frac{1}{8}''$	$\frac{3}{4}''$	$16\frac{1}{2}''$	$\frac{9}{16}''$	8"
W40x149	12"	$1\frac{3}{8}''$	$\frac{3}{4}''$	$16\frac{1}{2}''$	$\frac{11}{16}''$	$\frac{3}{8}''$

WELDED PLATE FIELD SPLICE

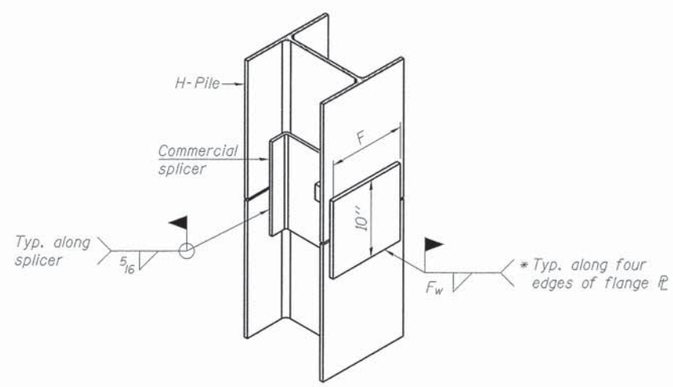

ISOMETRIC VIEW

WELDED COMMERCIAL SPLICE ALTERNATE

* Interrupt welds ¼'' from end of web and/or each flange.

** Remove portions of backup plates that extend outside the flanges.

*** Weld size per pile shoe manufacturer ($\frac{5}{16}''$ min.).

Note:
The steel H-piles shall be according to AASHTO M270 Grade 50.

FILE NAME = L:\Naperville\15238-01_WashingtonPh2\Dr-ex\CADD_Sheets\S-27 Pile Details.dgn

CMT
License No. 184-000613 ©Copyright CMT, Inc.

USER NAME = Peter Ross	DESIGNED - PA	REVISED -	
	DRAWN - DH	REVISED -	
PLOT SCALE = 2.0001 ' / in.	CHECKED - PA	REVISED -	
PLOT DATE = 12/12/2015 11:14:43 AM	DATE - 12/7/2015	REVISED -	

STATE OF ILLINOIS
DEPARTMENT OF TRANSPORTATION

PILE DETAILS
WASHINGTON STREET

SCALE: | SHEET 27 OF 28 SHEETS | STA. TO STA.

F.A.U. RTE.	SECTION	COUNTY	TOTAL SHEETS	SHEET NO.
2552	14-00161-00-BR	WILL	86	63

CONTRACT NO. 61C38

ILLINOIS FED. AID PROJECT DPC-M-4003(356)

Illinois Department of Transportation
Division of Highways
Staff Consultants, Inc.

Page 1 of 1

SOIL BORING LOG

Date 4/15/15

ROUTE County Highway 11 DESCRIPTION First Encounter Washington St. W. DuPage River LOGGED BY MDM

SECTION 14-00161-00-BR LOCATION SEC. 79, TWP. , RNG.

COUNTY Will County (Naperville) DRILLING METHOD Hollow Stem Auger HAMMER TYPE Automatic

STRUCT. NO. _____
Station _____

BORING NO. SB-01
Station 99+64.68
Offset 65.02ft Right
Ground Surface Elev. 637.44 ft

Surface Water Elev. _____ ft
Stream Bed Elev. _____ ft

Groundwater Elev.:
Upon Completion 631.4 ft
After ____ Hrs. 633.9 ft

Description	Elev.	DEPTH (ft)	BLOWS (/6")	UCS Qu (tsf)	MOIST (%)
TOPSOIL, Black	637.44				
CLAY with stone, Dark Brown, roots (FILL).	636.44	2			
		4	1.2	30.1	
		8	S		
CLAY with stone, Medium Stiff to Soft, Brown, (CL)	634.94				
		4			
		2		22.4	
		2			
SANDY GRAVEL, with traces of Silt, Medium Dense to Very Dense, Gray (GP-GM)	632.44				
		5			
		6		13.6	
		9			
		18			
		75/5"		3.8	
LIMESTONE, Slightly Weathered for the first 5 feet, Hard Layered with many horizontal separations	627.44	50/1"		4.3	
Recovery= 100% RQD= 32.5%					
Very Hard below 15'					
End of Boring	617.44				

The Unconfined Compressive Strength (UCS) Failure Mode is indicated by (B-Bulge, S-Shear, P-Penetrometer)
The SPT (N value) is the sum of the last two blow values in each sampling zone (AASHTO T206)

BBS, from 137 (Rev. 8-99)

Illinois Department of Transportation
Division of Highways
Staff Consultants, Inc.

Page 1 of 1

SOIL BORING LOG

Date 4/10/15

ROUTE County Highway 11 DESCRIPTION First Encounter Washington St. W. DuPage River LOGGED BY MDM

SECTION 14-00161-00-BR LOCATION SEC. 79, TWP. , RNG.

COUNTY Will County (Naperville) DRILLING METHOD Hollow Stem Auger HAMMER TYPE Automatic

STRUCT. NO. _____
Station _____

BORING NO. SB-02
Station 100+52.72
Offset 19.67ft Left
Ground Surface Elev. 650.17 ft

Surface Water Elev. _____ ft
Stream Bed Elev. _____ ft

Groundwater Elev.:
Upon Completion 630.2 ft
After ____ Hrs. 641.7 ft

Description	Elev.	DEPTH (ft)	BLOWS (/6")	UCS Qu (tsf)	MOIST (%)
Asphalt Pavement - 12" thick	649.17				
CLAY with Sand and Gravel, Brown (FILL)		3			
		5	1.0	8.8	
		5	B		
		6			
		3			
		2		4.1	
		2			
		4			
		3			
		3	1.2	12.7	
		3	B		
		3			
		2			
		3	0.6	17.2	
		6	B		
		5			
CLAY with Gravel, Medium Stiff, Dark Brown to Brown, (CL)	641.17	3			
		3	0.5	21.2	
		3	B		
		4			
		2			
		3	0.5	15.7	
		7	B		
		10			
		5			
		4		18.1	
		5			
		6			
CLAY with Sand and Gravel, Very Stiff, Brown and Gray, (CL)	630.17				
		15			
		13		18.8	
		15			
		12			
		5			
		5		8.4	
CLAY with Sand and Gravel; Very Stiff, Brown and Gray, (CL) continued	628.17	16			
		2			
		3			
SAND AND GRAVEL, Dense, Gray Brown (SP-GP)	628.17	70/1"		18.7	
LIMESTONE, Gray, layered with horizontal sparations, Hard					
Recovery 100% RQD 33.33%					
Very Hard below 25'					
End of Boring	618.17				

The Unconfined Compressive Strength (UCS) Failure Mode is indicated by (B-Bulge, S-Shear, P-Penetrometer)
The SPT (N value) is the sum of the last two blow values in each sampling zone (AASHTO T206)

BBS, from 137 (Rev. 8-99)

Illinois Department of Transportation
Division of Highways
Staff Consultants, Inc.

Page 1 of 1

SOIL BORING LOG

Date 4/14/15

ROUTE County Highway 11 DESCRIPTION First Encounter Washington St. W. DuPage River LOGGED BY MDM

SECTION 14-00161-00-BR LOCATION SEC. 79, TWP. , RNG.

COUNTY Will County (Naperville) DRILLING METHOD Hollow Stem Auger HAMMER TYPE Automatic

STRUCT. NO. _____
Station _____

BORING NO. RWB-02
Station 100+74.41
Offset 64.06ft Left
Ground Surface Elev. 641.47 ft

Surface Water Elev. _____ ft
Stream Bed Elev. _____ ft

Groundwater Elev.:
Upon Completion 629.5 ft
After ____ Hrs. 632.5 ft

Description	Elev.	DEPTH (ft)	BLOWS (/6")	UCS Qu (tsf)	MOIST (%)
TOPSOIL - Black	641.14				
CLAY with Sand & Gravel - Gray and Brown: (FILL)		2			
		3	1.5	20.5	
		4	P		
		3			
		4	1.5	33.5	
		6	P		
CLAY with Sand & Gravel , Medium Stiff to Stiff- Brown -(CL)	626.47				
		2			
		2	0.5	27.9	
		3	P		
		3			
		8	0.5	24.9	
		12	P		
GRAVEL and SAND with Silt, Medium Dense to Very Dense, Gray Brown, - (GP -GM)	621.47				
		10			
		8		6.3	
		9			
LIMESTONE - Weathered with horizontal seams for the top 5 feet. Hard	617.97	50/1"		4.3	
Recover 100% RQD 40.0%					
LIMESTONE - Very Hard; Light Gray, Few horizontal seam					
Recovery 100% RQD 40.0%					
End of Boring	617.97				

The Unconfined Compressive Strength (UCS) Failure Mode is indicated by (B-Bulge, S-Shear, P-Penetrometer)
The SPT (N value) is the sum of the last two blow values in each sampling zone (AASHTO T206)

BBS, from 137 (Rev. 8-99)

Illinois Department of Transportation
Division of Highways
Staff Consultants, Inc.

Page 1 of 1

SOIL BORING LOG

Date 4/13/15

ROUTE County Highway 11 DESCRIPTION First Encounter Washington St. W. DuPage River LOGGED BY MDM

SECTION 14-00161-00-BR LOCATION SEC. 79, TWP. , RNG.

COUNTY Will County (Naperville) DRILLING METHOD Hollow Stem Auger HAMMER TYPE Automatic

STRUCT. NO. _____
Station _____

BORING NO. RWB-03
Station 98+86.84
Offset 58.56ft Right
Ground Surface Elev. 642.14 ft

Surface Water Elev. _____ ft
Stream Bed Elev. _____ ft

Groundwater Elev.:
Upon Completion 632.1 ft
After ____ Hrs. 637.1 ft

Description	Elev.	DEPTH (ft)	BLOWS (/6")	UCS Qu (tsf)	MOIST (%)
CLAY - with some gravel -Brown (FILL)	641.14				
CLAY with Sand and Gravel, Stiff, Brown (CL)		6			
		6		11.7	
		10			
SAND AND GRAVEL, Medium Dense to Dense, Gray Brown; (GP-GM)	639.64				
		17			
		12		5.9	
		12			
		12			
		5		5.5	
		22			
		12			
		17		4.4	
		12			
		15			
		14		5.3	
		8			
		14			
		11		6.2	
		10			
		22			
		15		8.9	
Weathered ROCK, Broken, Hard Gray	627.64	50/4"			
LIMESTONE, Hard to Very Hard, Gray	627.14				
Recovery 100% RQD 42.5%					
LIMESTONE; Hard to Very Hard, Gray					
Recovery 100% RQD 42.5% (continued)					
End of Boring	617.14				

The Unconfined Compressive Strength (UCS) Failure Mode is indicated by (B-Bulge, S-Shear, P-Penetrometer)
The SPT (N value) is the sum of the last two blow values in each sampling zone (AASHTO T206)

BBS, from 137 (Rev. 8-99)

Illinois Department of Transportation
Division of Highways
Staff Consultants, Inc.

Page 1 of 1

SOIL BORING LOG

Date 4/10/15

ROUTE County Highway 11 DESCRIPTION First Encounter Washington St. W. DuPage River LOGGED BY MDM

SECTION 14-00161-00-BR LOCATION SEC. 79, TWP. , RNG.

COUNTY Will County (Naperville) DRILLING METHOD Hollow Stem Auger HAMMER TYPE Automatic

STRUCT. NO. _____
Station _____

BORING NO. RWB-04
Station 99+05.68
Offset 19.11ft Left
Ground Surface Elev. 652.49 ft

Surface Water Elev. _____ ft
Stream Bed Elev. _____ ft

Groundwater Elev.:
Upon Completion 632.5 ft
After ____ Hrs. 640.5 ft

Description	Elev.	DEPTH (ft)	BLOWS (/6")	UCS Qu (tsf)	MOIST (%)
Asphalt Pavement: 12" thick	651.49				
CLAY with Sand and Gravel, Brown & Gray - (FILL)		4			
		8	1.9	4.2	
		7			
		4			
		4	1.7	16.4	
		4			
		3			
		4	0.6	12.3	
		4			
		3			
		3		14.7	
		4			
		3			
		2		19.7	
		4			
CLAY, Medium Stiff, Gray (CL)	639.99				
		1			
		3	0.8	21.7	
		3			
CLAY with Gravel, Stiff,Gray (CL)	636.49				
		4			
		5		12.5	
		7			
	634.49				
		7			
		7		7.0	
		8			
SAND AND GRAVEL, Medium Dense, Gray (SP-GP)					
		3			
		7		5.9	
		8			
Encountered Rock at 23.5' Auger and spoon refusal at 13.6' (continued)	628.99				
End of Boring		50/1"		7.6	

The Unconfined Compressive Strength (UCS) Failure Mode is indicated by (B-Bulge, S-Shear, P-Penetrometer)
The SPT (N value) is the sum of the last two blow values in each sampling zone (AASHTO T206)

BBS, from 137 (Rev. 8-99)

FILE NAME = L:\Naperville\15230-01_Washington\Ph2\Draw\CADD_Sheets\S-28 Boring Logs.dgn

CMT
License No. 184-000613 ©Copyright CMT, Inc.

USER NAME = Peter Ross	DESIGNED - PA	REVISED -	
	DRAWN - DH	REVISED -	
PLOT SCALE = 1.0000 ' / in.	CHECKED - PA	REVISED -	
PLOT DATE = 12/12/2015 11:14:44 AM	DATE - 12/7/2015	REVISED -	

STATE OF ILLINOIS
DEPARTMENT OF TRANSPORTATION

BORING LOGS
WASHINGTON STREET

SCALE: SHEET 28 OF 28 SHEETS STA. TO STA.

F.A.U. RTE.	SECTION	COUNTY	TOTAL SHEETS	SHEET NO.
2552	14-00161-00-BR	WILL	86	64

CONTRACT NO. 61C38

ILLINOIS FED. AID PROJECT DPC-M-4003(356)

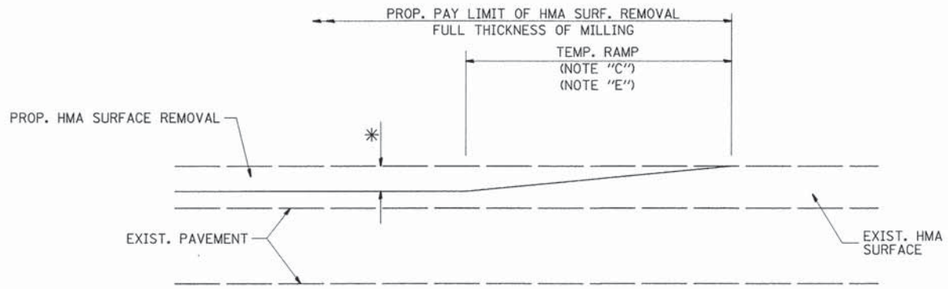

MILLED TEMPORARY RAMP

(FOR BUTT JOINT AND HMA TAPER SEE DETAIL BELOW)

OPTION 1

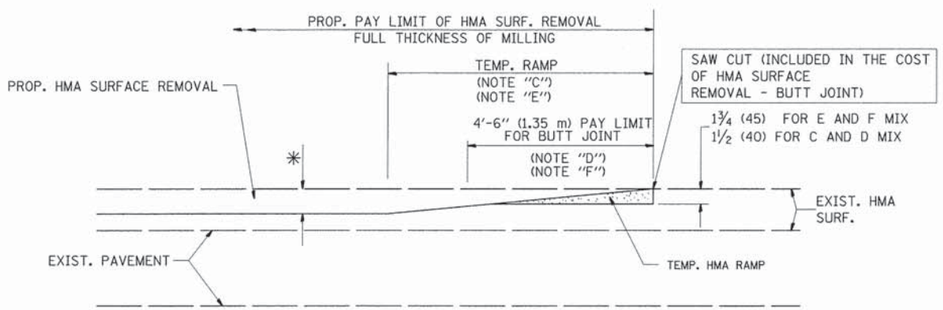

HMA CONSTRUCTED TEMPORARY RAMP

(FOR BUTT JOINT AND HMA TAPER SEE DETAIL BELOW)

OPTION 2

TYPICAL TEMPORARY RAMP

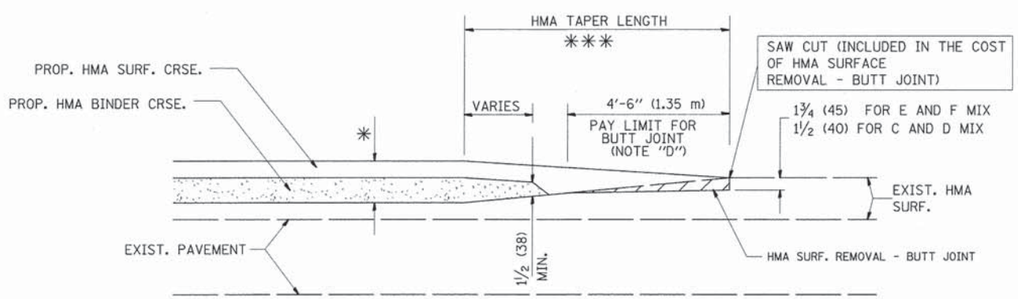

BUTT JOINT AND HMA TAPER

TYPICAL BUTT JOINT AND HMA TAPER FOR MILLING AND RESURFACING

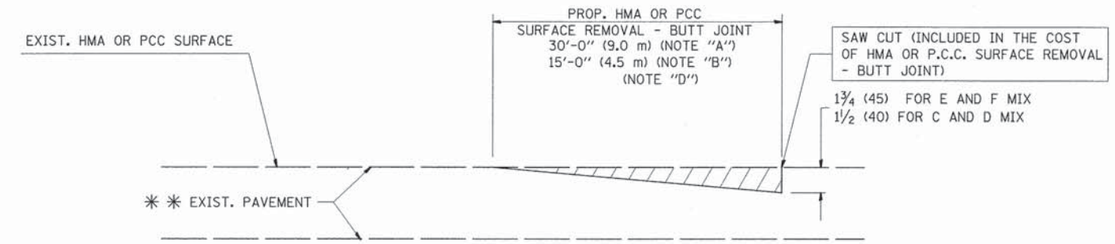

BUTT JOINT DETAIL

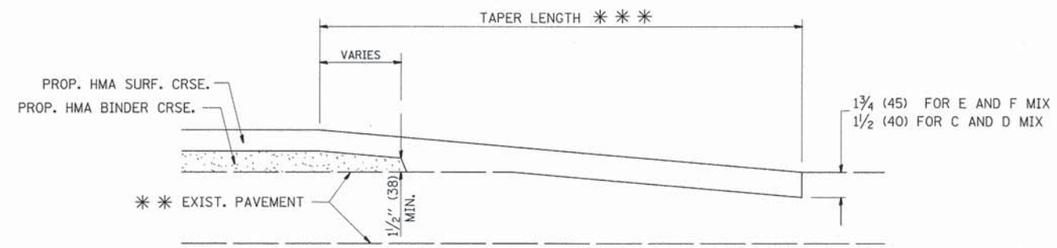

HMA TAPER DETAIL

TYPICAL BUTT JOINT AND HMA TAPER FOR RESURFACING ONLY

✳✳ PC CONCRETE, HMA OR HMA RESURFACED PAVEMENT.

NOTES

A: MAINLINE ROADWAYS AND MAJOR SIDE ROADS.

B: MINOR SIDE ROADS.

C: THE TEMP. RAMP SHALL BE CONSTRUCTED IMMEDIATELY UPON REMOVAL OF THE EXISTING HMA SURFACE.

D: THE BUTT JOINT SHALL BE CONSTRUCTED IMMEDIATELY PRIOR TO PLACING THE PROPOSED HMA COURSES.

E: TAPER THE TEMP. RAMP AT A RATE OF 3'-0" (900 mm) PER 1 INCH (25 mm) OF MILLING THICKNESS.

F: INSTALLATION AND REMOVAL OF THE 4'-6" (1.35 m) TEMP. RAMP IS INCLUDED IN COST OF HMA SURFACE REMOVAL - BUTT JOINT

G: SEE ARTICLE 406.08 AND 406.14 OF THE STANDARD SPECIFICATIONS FOR "HMA AND/OR PCC SURFACE REMOVAL, BUTT JOINT".

✳ SEE TYPICAL SECTIONS FOR MILLING THICKNESS.

✳✳✳ 20'-0" (6.1 m) PER 1 (25) RESURFACING (NOTE "A")
10'-0" (3.0 m) PER 1 (25) RESURFACING (NOTE "B")

BASIS OF PAYMENT:

THE BUTT JOINT WILL BE PAID FOR AT THE CONTRACT UNIT PRICE PER SQUARE YARD (SQUARE METER) FOR "HOT-MIX ASPHALT SURFACE REMOVAL - BUTT JOINT" OR FOR "PORTLAND CEMENT CONCRETE SURFACE REMOVAL- BUTT JOINT".

ALL DIMENSIONS ARE IN INCHES (MILLIMETERS) UNLESS OTHERWISE SHOWN.

FILE NAME = L:\Naperville\15230-01_WashingtonPh2\Dra\CADD_Sheets\sht-01 Standards_BD32.dgn	USER NAME = Peter Ross	DESIGNED - M. DE YONG	REVISED - R. SHAH 10-25-94	STATE OF ILLINOIS DEPARTMENT OF TRANSPORTATION
	PLOT SCALE = 50.0000 ' / in.	DRAWN -	REVISED - A. ABBAS 03-21-97	
	PLOT DATE = 12/14/2015 10:57:00 AM	CHECKED -	REVISED - M. GOMEZ 04-06-01	
		DATE - 06-13-90	REVISED - R. BORO 01-01-07	

BUTT JOINT AND HMA TAPER DETAILS

SCALE: NONE | SHEET NO. 1 OF 1 SHEETS | STA. | TO STA.

F.A. RTE.	SECTION	COUNTY	TOTAL SHEETS	SHEET NO.
2552	14-00161-00-BR	WILL	86	65
	BD400-05 BD32	CONTRACT NO. 61C38		

FED. ROAD DIST. NO. 1 | ILLINOIS | FED. AID PROJECT DPC-M-4003(356)

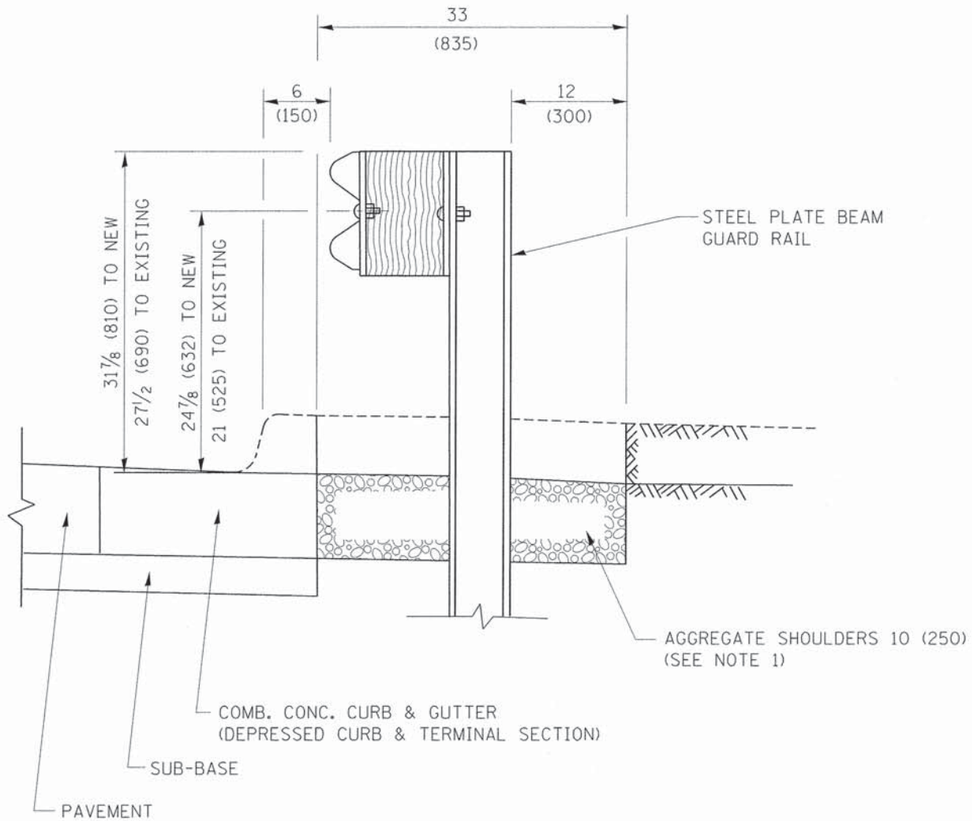

SECTION A-A

NOTES:

1. THE AGGREGATE SHOULDER, 10 (250) OR HMA SHOULDER, 6 (150) (IF REQUIRED) SHALL EXTEND UNDER THE TRAFFIC BARRIER TERMINAL.
2. "EXISTING" GUARDRAIL REFERS TO CONNECTING TERMINAL SECTION TO GUARD RAILING PRIOR TO THE MIDWEST GUARDRAIL SYSTEM.
3. THE CONTRACTOR SHALL VERIFY THE TYPE/HEIGHT OF GUARDRAIL IN-PLACE BEFORE ORDERING THE NEW TERMINAL SECTION. COST INCLUDED WITH THE COST OF THE TERMINAL. THE TERMINAL SECTION HEIGHT TO BE PLACED MUST MATCH THE HEIGHT OF THE IN-PLACE GUARDRAIL.

DETAILS FOR STEEL PLATE BEAM GUARD RAIL ADJACENT TO CURB AND GUTTER

[FOR ROADWAY SPEED 35 MPH (60 kmh) TO 45 MPH (70 kmh)]

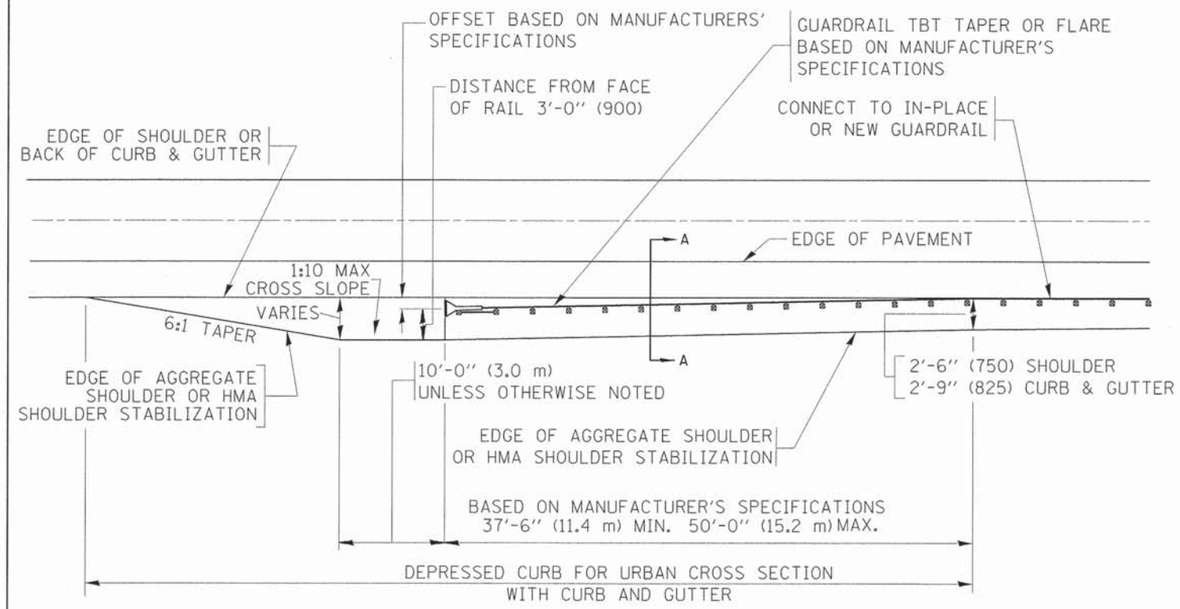

DEPRESSED CURB AND GUTTER AND SHOULDER TREATMENT AT TBT TY. 1 SPL.

AGGREGATE SHOULDER, 10 (250) WILL BE PAID ACCORDING TO SECTION 481.

HMA SHOULDERS 6 (150) (IF REQUIRED) WILL BE PAID ACCORDING TO SECTION 482.

COMB. CONC. C&G, STEEL PLATE BEAM GUARD RAIL AND TRAFFIC BARRIER TERMINAL, OF THE TYPE SPECIFIED WILL BE PAID FOR SEPARATELY.

TBT = TRAFFIC BARRIER TERMINAL

ALL DIMENSIONS ARE IN INCHES (MILLIMETERS) UNLESS OTHERWISE SHOWN.

FILE NAME = c:\pw_work\pwidot\drivakosgn\d0108315\bd34.dgn	USER NAME = drivakosgn	DESIGNED - M. DE YONG	REVISED - R. BORO 01-01-07	STATE OF ILLINOIS DEPARTMENT OF TRANSPORTATION	DETAILS FOR DEPRESSED CURB & GUTTER AND SHOULDER TREATMENT AT TBT TY 1 SPL.	F.A. RTE.	SECTION	COUNTY	TOTAL SHEETS	SHEET NO.
		DRAWN -	REVISED - R. BORO 12-08-2008			2552	14-00161-00-BR	WILL	86	66
	PLOT SCALE = 50.0000 ' / in.	CHECKED -	REVISED - R. BORO 09-14-2009				BD600-10 (BD 34)	CONTRACT NO. 61C38		
	PLOT DATE = 9/4/2012	DATE - 09-22-90	REVISED - R. BORO 08-06-2012		SCALE: NONE	SHEET NO. 1 OF 1 SHEETS	STA. TO STA.	FED. ROAD DIST. NO. 1	ILLINOIS	FED. AID PROJECT

4:dgn 9/6/2012 7:51:24 AM User=drivakosgn

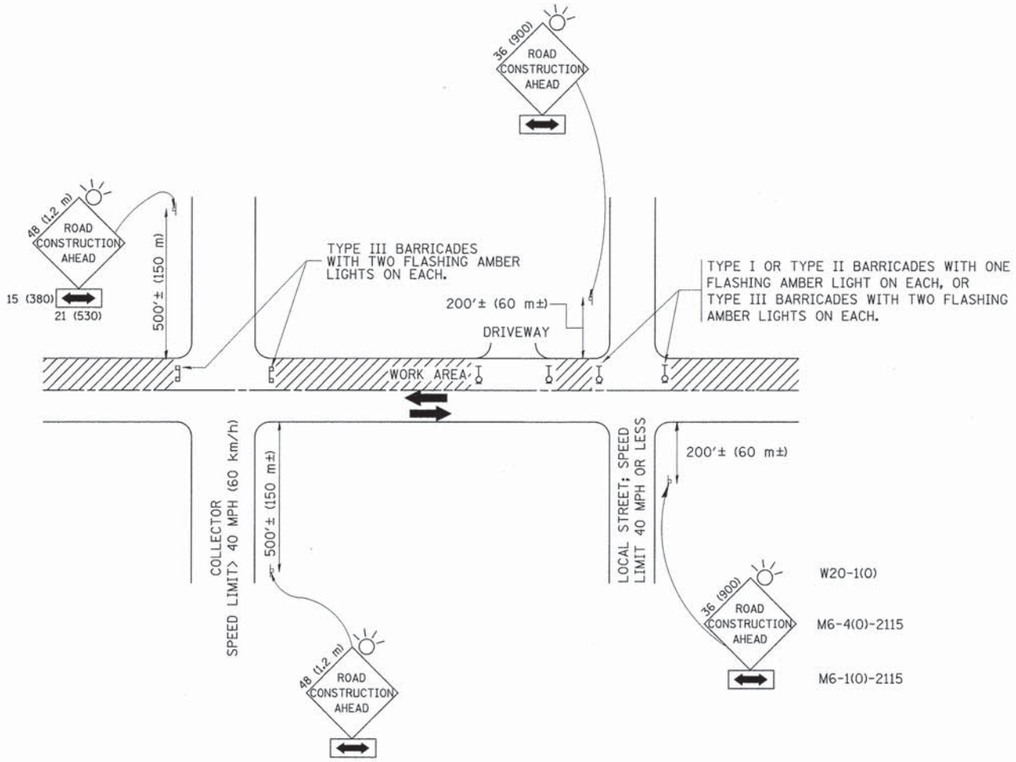

TRAFFIC CONTROL AND PROTECTION FOR SIDE ROADS, INTERSECTIONS, AND DRIVEWAYS

NOTES:

A. FOR NO LANE RESTRICTION ON THE SIDE ROAD OR DRIVEWAYS

1. SIDE ROAD WITH A SPEED LIMIT OF 40 MPH (60 km/h) OR LESS AS SHOWN ON THE DRAWING AND AS DIRECTED BY THE ENGINEER:

   a) ONE **ROAD CONSTRUCTION AHEAD** SIGN 36 x 36 (900x900) WITH A FLASHER AND FLAG MOUNTED ON IT APPROXIMATELY 200' (60 m) IN ADVANCE OF THE MAIN ROUTE.

   b) THE CLOSED PORTION OF THE MAIN ROUTE SHALL BE PROTECTED BY BLOCKING WITH TYPE I, TYPE II OR TYPE III BARRICADES, 1/3 OF THE CROSS SECTION OF THE CLOSED PORTION.

2. SIDE ROAD WITH A SPEED LIMIT GREATER THAN 40 MPH (60 km/h) AS SHOWN ON THE DRAWING AND AS DIRECTED BY THE ENGINEER:

   a) ONE **ROAD CONSTRUCTION AHEAD** SIGN 48 x 48 (1.2 m x 1.2 m) WITH A FLASHER MOUNTED ON IT APPROXIMATELY 500' (150 m) IN ADVANCE OF THE MAIN ROUTE.

   b) THE CLOSED PORTION OF THE MAIN ROUTE SHALL BE PROTECTED BY BLOCKING WITH TYPE III BARRICADES, 1/2 OF THE CROSS SECTION OF THE CLOSED PORTION.

3. WHEN THE SIDE ROAD LIES BETWEEN THE BEGINNING OF THE MAINLINE SIGNING AND THE WORK ZONE, A SINGLE HEADED ARROW (M6-1) SHALL BE USED IN LIEU OF THE DOUBLE HEADED ARROW (M6-4).

B. FOR A LANE CLOSURE ON A SIDE ROAD OR DRIVEWAY:

USE APPLICABLE PORTIONS OF THE TYPICAL APPLICATION OF TRAFFIC CONTROL DEVICES (STD. 701501, STD. 701606 OR THE APPROPRIATE STANDARD). THE SPACING OF SIGNS AND BARRICADES SHALL BE ADJUSTED FOR FIELD CONDITIONS AS DIRECTED BY THE ENGINEER. THE DIRECTIONAL ARROW SHALL BE COVERED OR REMOVED WHEN NO LONGER CONSISTENT WITH THE SIDE ROAD LANE CLOSURE.

C. ADVANCE WARNING SIGNS ARE TO BE OMITTED ON DRIVEWAY UNLESS OTHERWISE NOTED.

D. THE TRAFFIC CONTROL AND PROTECTION FOR SIDE ROADS, INTERSECTIONS, AND DRIVEWAYS SHALL BE INCIDENTAL TO THE COST OF SPECIFIED TRAFFIC CONTROL STANDARDS OR ITEMS.

All dimensions are in millimeters (inches) unless otherwise shown.

FILE NAME = L:\Naperville\15230-01_WashingtonPh2\Dra	USER NAME = Peter Ross	DESIGNED - LHA	REVISED - J. OBERLE 10-18-95	STATE OF ILLINOIS DEPARTMENT OF TRANSPORTATION	TRAFFIC CONTROL AND PROTECTION FOR SIDE ROADS, INTERSECTIONS, AND DRIVEWAYS			F.A. RTE.	SECTION	COUNTY	TOTAL SHEETS / SHEET NO.
	\CADD_Sheets\sht-01 Standards_TC10.dgn	DRAWN -	REVISED - A. HOUSEH 03-06-96					2552	14-00161-00-BR	WILL	86 / 67
	PLOT SCALE = 1.0000 ' / in.	CHECKED -	REVISED - A. HOUSEH 10-15-96						TC-10	CONTRACT NO. 61C38	
	PLOT DATE = 12/14/2015 10:57:01 AM	DATE - 06-89	REVISED -T. RAMMACHER 01-06-00		SCALE: NONE	SHEET NO. 1 OF 1 SHEETS	STA. TO STA.	FED. ROAD DIST. NO. 1	ILLINOIS	FED. AID PROJECT DPC-M-4003(356)	

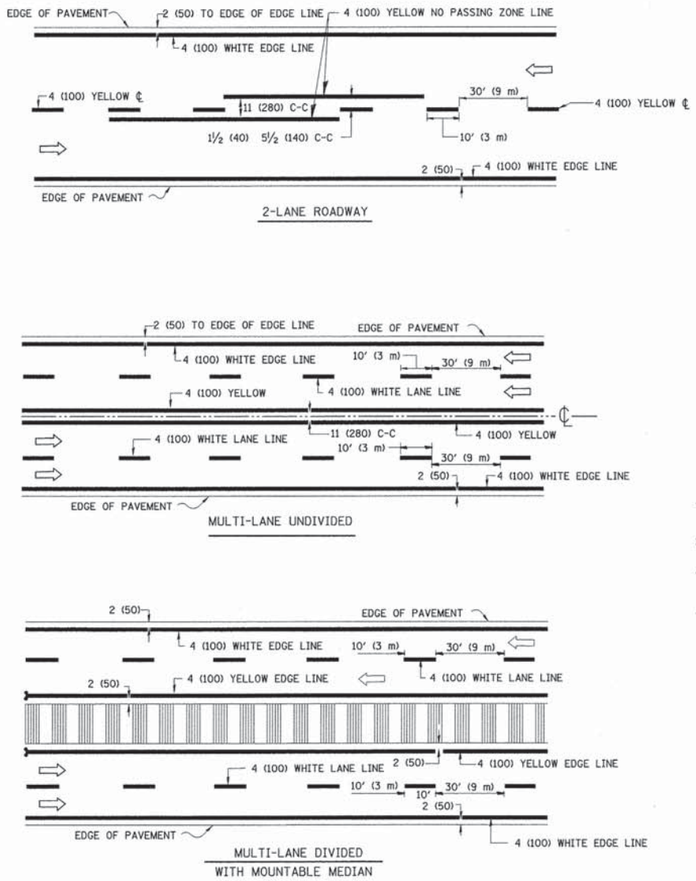

NOTE: MEDIANS WITH BARRIER CURB DO NOT REQUIRE AN EDGE LINE

TYPICAL LANE AND EDGE LINE MARKING

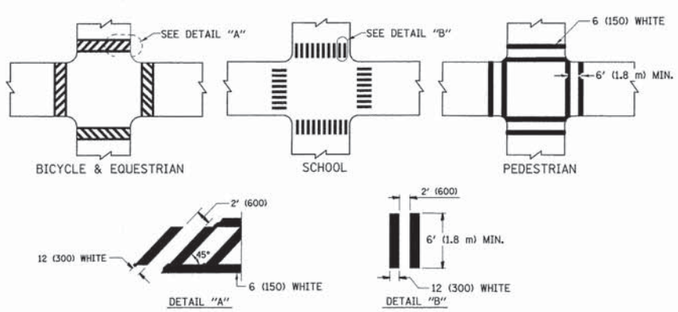

TYPICAL CROSSWALK MARKING

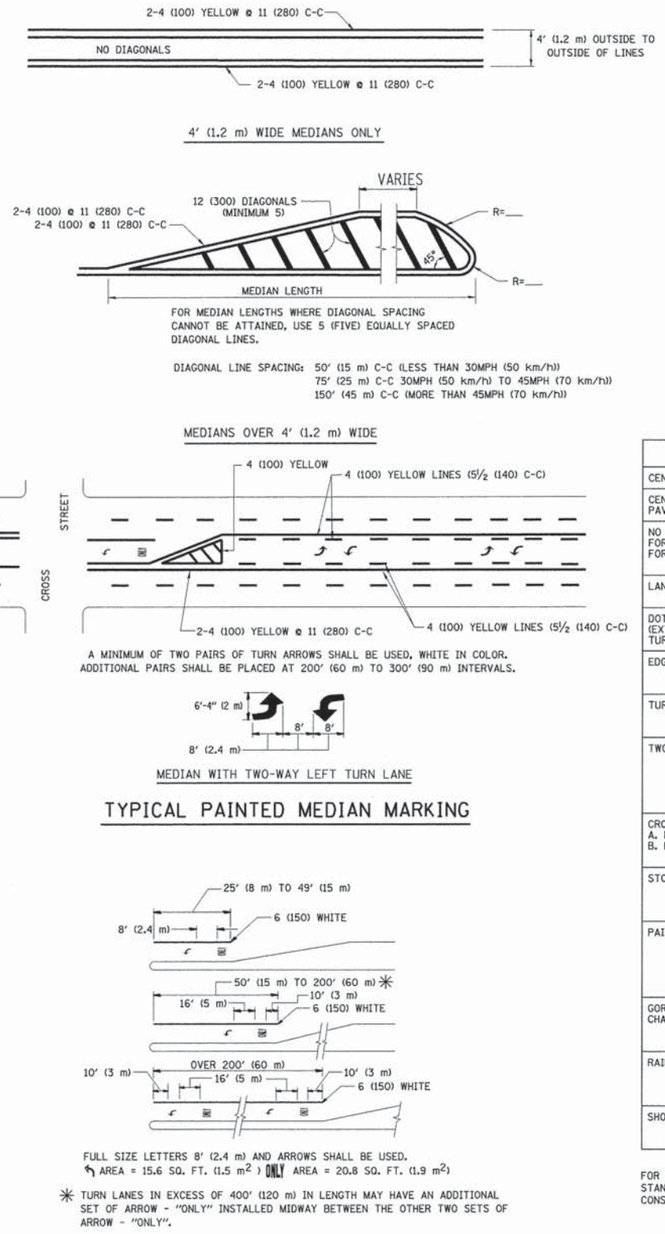

TYPICAL PAINTED MEDIAN MARKING

TYPICAL TURN LANE MARKING

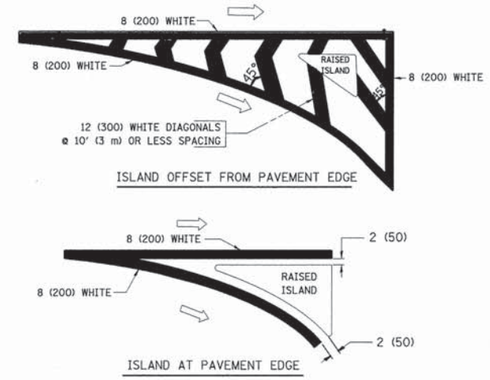

TYPICAL ISLAND MARKING

TYPE OF MARKING	WIDTH OF LINE	PATTERN	COLOR	SPACING / REMARKS
CENTERLINE ON 2 LANE PAVEMENT	4 (100)	SKIP-DASH	YELLOW	10' (3 m) LINE WITH 30' (9 m) SPACE
CENTERLINE ON MULTI-LANE UNDIVIDED PAVEMENT	2 @ 4 (100)	SOLID	YELLOW	11 (280) C-C
NO PASSING ZONE LINES: FOR ONE DIRECTION FOR BOTH DIRECTIONS	4 (100) 2 @ 4 (100)	SOLID SOLID	YELLOW YELLOW	5½ (140) C-C FROM SKIP-DASH CENTERLINE 11 (280) C-C OMIT SKIP-DASH CENTERLINE BETWEEN
LANE LINES	4 (100) 5 (125) ON FREEWAYS	SKIP-DASH SKIP-DASH	WHITE WHITE	10' (3 m) LINE WITH 30' (9 m) SPACE
DOTTED LINES (EXTENSIONS OF CENTER, LANE OR TURN LANE MARKINGS)	SAME AS LINE BEING EXTENDED	SKIP-DASH	SAME AS LINE BEING EXTENDED	2' (600) LINE WITH 6' (1.8 m) SPACE
EDGE LINES	4 (100)	SOLID	YELLOW-LEFT WHITE-RIGHT	OUTLINE MOUNTABLE MEDIANS IN YELLOW; EDGE LINES ARE NOT USED NEXT TO BARRIER CURB
TURN LANE MARKINGS	6 (150) LINE; FULL SIZE LETTERS & SYMBOLS (8' (2.4m))	SOLID	WHITE	SEE TYPICAL TURN LANE MARKING DETAIL
TWO WAY LEFT TURN MARKING	2 @ 4 (100) EACH DIRECTION 8' (2.4m) LEFT ARROW	SKIP-DASH AND SOLID IN PAIRS	YELLOW WHITE	10' (3 m) LINE WITH 30' (9 m) SPACE FOR SKIP-DASH; 5½ (140) C-C BETWEEN SOLID LINE AND SKIP-DASH LINE SEE TYPICAL TWO-WAY LEFT TURN MARKING DETAIL
CROSSWALK LINES (PEDESTRIAN) A. DIAGONALS (BIKE & EQUESTRIAN) B. LONGITUDINAL BARS (SCHOOL)	2 @ 6 (150) 12 (300) @ 45° 12 (300) @ 90°	SOLID SOLID SOLID	WHITE WHITE WHITE	NOT LESS THAN 6' (1.8 m) APART 2' (600) APART 2' (600) APART SEE TYPICAL CROSSWALK MARKING DETAILS.
STOP LINES	24 (600)	SOLID	WHITE	PLACE 4' (1.2 m) IN ADVANCE OF AND PARALLEL TO CROSSWALK, IF PRESENT. OTHERWISE, PLACE AT DESIRED STOPPING POINT. PARALLEL TO CROSSROAD CENTERLINE, WHERE POSSIBLE
PAINTED MEDIANS	2 @ 4 (100) WITH 12 (300) DIAGONALS @ 45° NO DIAGONALS USED FOR 4' (1.2 m) WIDE MEDIANS	SOLID	YELLOW: TWO WAY TRAFFIC WHITE: ONE WAY TRAFFIC	11 (280) C-C FOR THE DOUBLE LINE SEE TYPICAL PAINTED MEDIAN MARKING.
GORE MARKING AND CHANNELIZING LINES	8 (200) WITH 12 (300) DIAGONALS @ 45°	SOLID	WHITE	DIAGONALS: 15' (4.5 m) C-C (LESS THAN 30MPH (50 km/h)) 20' (6 m) C-C 30MPH (50 km/h) TO 45MPH (70 km/h)) 30' (9 m) C-C (OVER 45MPH (70 km/h))
RAILROAD CROSSING	24 (600) TRANSVERSE LINES; "RR" IS 6' (1.8 m) LETTERS; 16 (400) LINE FOR "X"	SOLID	WHITE	SEE STATE STANDARD 780001 AREA OF: "R"=3.6 SQ. FT. (0.33 m²) EACH "X"=54.0 SQ. FT. (5.0 m²)
SHOULDER DIAGONALS	12 (300) @ 45°	SOLID	WHITE - RIGHT YELLOW - LEFT	50' (15 m) C-C (LESS THAN 30MPH (50 km/h)) 75' (25 m) C-C (30 MPH (50 km/h) TO 45MPH (70 km/h)) 150' (45 m) C-C (OVER 45MPH (70 km/h))

FOR FURTHER DETAILS ON PAVEMENT MARKING REFER TO STANDARD SPECIFICATIONS FOR ROAD AND BRIDGE CONSTRUCTION AND STATE STANDARD 780001.

All dimensions are in inches (millimeters) unless otherwise shown.

FILE NAME = L:\Naperville\15230-01_WashingtonPh2\Draw\CADD_Sheets\sht-D1 Standards_TC13.dgn	USER NAME = Peter Ross	DESIGNED - EVERS	REVISED -T. RAMMACHER 10-27-94
		DRAWN -	REVISED -C. JUCIUS 09-09-09
	PLOT SCALE = 1.0000 ' / in.	CHECKED -	REVISED -
	PLOT DATE = 12/14/2015 10:57:01 AM	DATE - 03-19-90	REVISED -

STATE OF ILLINOIS
DEPARTMENT OF TRANSPORTATION

DISTRICT ONE
TYPICAL PAVEMENT MARKINGS

SCALE: NONE | SHEET NO. 1 OF 1 SHEETS | STA. | TO STA.

F.A. RTE.	SECTION	COUNTY	TOTAL SHEETS	SHEET NO.
2552	14-00161-00-BR	WILL	86	68
	TC-13	CONTRACT NO. 61C38		
FED. ROAD DIST. NO. 1	ILLINOIS	FED. AID PROJECT DPC-M-4003(356)		

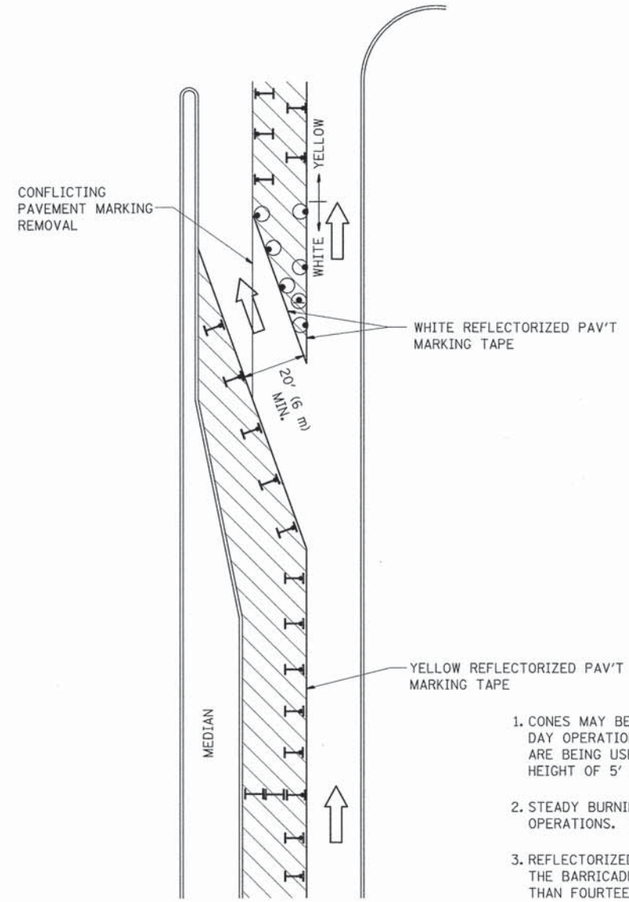

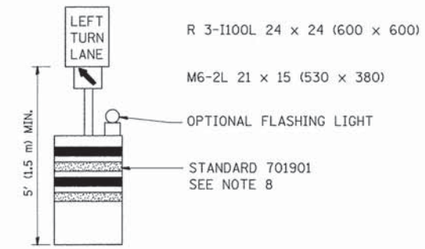

GENERAL NOTES

1. CONES MAY BE SUBSTITUTED FOR BARRICADES OR DRUMS AT HALF THE SPACING DURING DAY OPERATIONS. CONES SHALL BE A MINIMUM OF 28 (710) IN HEIGHT. WHEN CONES ARE BEING USED, THE "LEFT TURN LANE" SIGN MAY BE SKID MOUNTED AT A MINIMUM HEIGHT OF 5' (1.5 m).
2. STEADY BURNING LIGHTS WILL NOT BE REQUIRED ON BARRICADES OR DRUMS FOR DAY OPERATIONS. ALL LIGHTS SHALL BE MONODIRECTIONAL.
3. REFLECTORIZED TEMPORARY PAVEMENT MARKING TAPE SHALL BE PLACED THROUGHOUT THE BARRICADED AREA OF EACH TURN BAY WHERE THE CLOSURE TIME IS GREATER THAN FOURTEEN DAYS.
4. THIS APPLICATION ALSO APPLIES WHEN WORK IS BEING PERFORMED IN THE RIGHT LANE(S) AND THE RIGHT TURN BAY IS TO REMAIN OPEN. UNDER THIS CONDITION, "RIGHT TURN LANE" R3-100 24 x 24 (600 x 600) AND M6-2R 21 x 15 (530 x 380) SHALL BE USED.
5. THESE CONTROLS SHALL SUPPLEMENT MAINLINE TRAFFIC CONTROL FOR LANE CLOSURES.
6. LONGITUDINAL DIMENSIONS MAY BE ADJUSTED TO FIT FIELD CONDITIONS.
7. FORM OPER 725 IS REQUIRED.
8. IF A DRUM OR TYPE II BARRICADE WITH AN ATTACHED SIGN PANEL WHICH MEETS NCHRP 350 REQUIREMENTS IS NOT AVAILABLE, THE SIGNS SHALL BE MOUNTED, ABOVE THE BARRICADES, ON SEPARATE SIGNS SUPPORTS THAT MEET NCHR 350 PREQUIREMENTS.
9. TRAFFIC CONTROL AND PROTECTION AT TURN BAYS (TO REMAIN OPEN TO TRAFFIC) SHALL BE INCLUDED IN THE COST SPECIFIED TRAFFIC CONTROL STANDARDS OR ITEMS.

All dimensions are in inches (millimeters) unless otherwise shown.

LEGEND

- WORK AREA
- LANE OPEN TO TRAFFIC
- TYPE I OR II BARRICADE WITH STEADY BURN LIGHT
- DRUM WITH STEADY BURN LIGHT
- DRUM WITH SIGN (WITH OPTIONAL FLASHING LIGHT) SEE DETAIL
- TYPE I OR II CHECK BARRICADE WITH FLASHING LIGHT

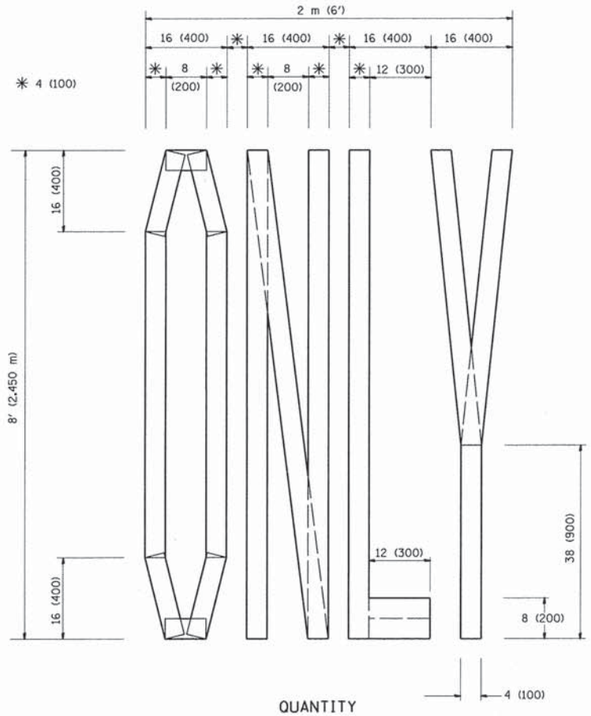

QUANTITY
4 (100) LINE = 64.1 ft. (19.7 m)
21.1 sq. ft. (1.97 sq. m)

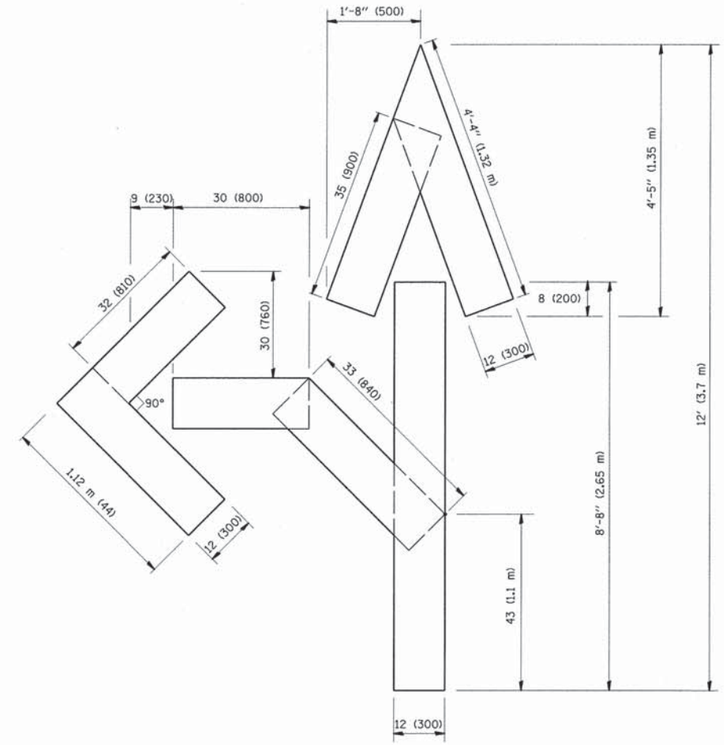

QUANTITY
4 (100) LINE = 82.5 ft. (25.3 m)
27.5 sq. ft. (2.53 sq. m)

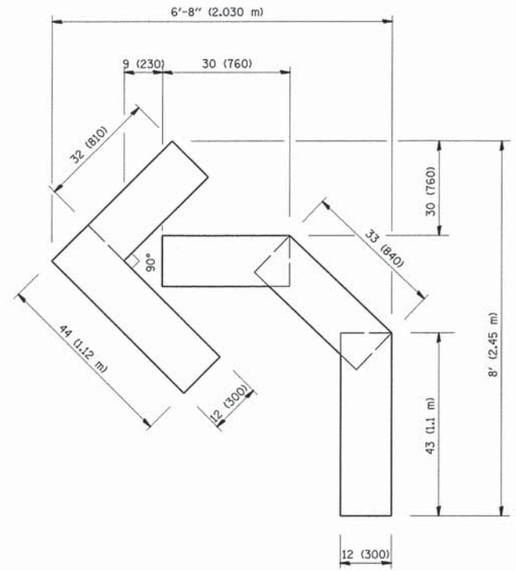

QUANTITY
4 (100) LINE = 45.5 ft. (13.9 m)
15.2 sq. ft. (1.39 sq. m)

All dimensions are in inches (millimeters) unless otherwise shown.

FILE NAME = L:\Naperville\15230-01_WashingtonPh2\Draw\CADD_Sheets\sht-DI Standards_TC16.dgn	USER NAME = Peter Ross	DESIGNED -	REVISED -T. RAMMACHER 06-05-96	STATE OF ILLINOIS DEPARTMENT OF TRANSPORTATION	PAVEMENT MARKING LETTERS AND SYMBOLS FOR TRAFFIC STAGING	F.A. RTE.	SECTION	COUNTY	TOTAL SHEETS	SHEET NO.
		DRAWN -	REVISED -T. RAMMACHER 11-04-97			2552	14-00161-00-BR	WILL	86	70
	PLOT SCALE = 1.0000 ' / in.	CHECKED -	REVISED -T. RAMMACHER 03-02-98				TC-16	CONTRACT NO. 61C38		
	PLOT DATE = 12/14/2015 10:57:03 AM	DATE - 09-18-94	REVISED -E. GOMEZ 08-28-00		SCALE: NONE / SHEET NO. 1 OF 1 SHEETS / STA. / TO STA.	FED. ROAD DIST. NO. 1	ILLINOIS	FED. AID PROJECT DPC-M-4003(356)		

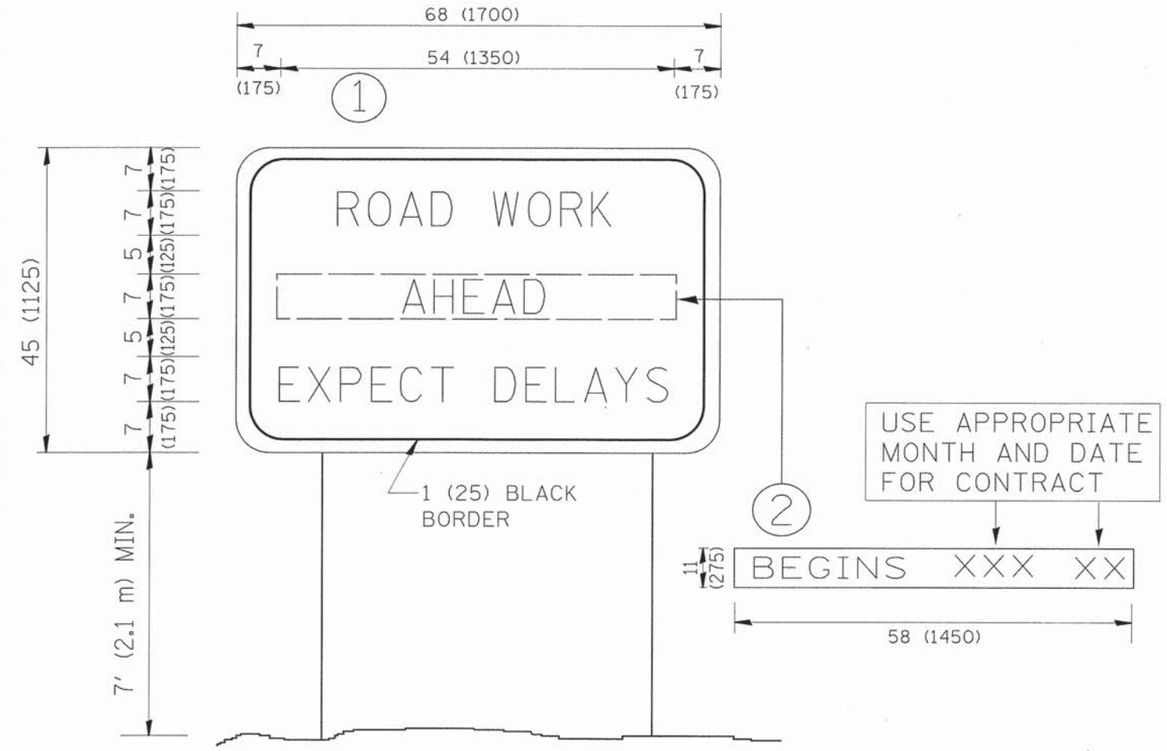

NOTES:

1. USE BLACK LETTERING ON ORANGE BACKGROUND.
2. ERECT SIGNS IN ADVANCE OF THE LOCATION FOR THE "ROAD CONSTRUCTION AHEAD" SIGN AT LOCATIONS AS DIRECTED BY THE ENGINEER.
3. ERECT SIGN 1 WITH INSTALLED PANEL 2 ONE WEEK PRIOR TO THE START OF CONSTRUCTION.
4. REMOVE PANEL 2 SOON AFTER THE START OF CONSTRUCTION.
5. SEE SPECIAL PROVISION FOR "TEMPORARY INFORMATION SIGNING" FOR ADDITIONAL INFORMATION.
6. ONE SIGN ASSEMBLY EQUALS 25.70 SQ. FT. (2.3 SQ. M.)
7. SHALL BE PAID FOR AS TEMPORARY INFORMATION SIGNING.

ALL DIMENSIONS ARE IN INCHES (MILLIMETERS) UNLESS OTHERWISE SHOWN.

FILE NAME = L:\Naperville\15230-01_WashingtonPh2\Dra\CADD_Sheets\sht-DI Standards_TC22.dgn	USER NAME = Peter Ross	DESIGNED -	REVISED - R. MIRS 09-15-97	STATE OF ILLINOIS DEPARTMENT OF TRANSPORTATION	ARTERIAL ROAD INFORMATION SIGN	F.A. RTE.	SECTION	COUNTY	TOTAL SHEETS	SHEET NO.
		DRAWN -	REVISED - R. MIRS 12-11-97			2552	14-00161-00-BR	WILL	86	71
	PLOT SCALE = 1.0000 ' / in.	CHECKED -	REVISED -T. RAMMACHER 02-02-99				TC-22	CONTRACT NO. 61C38		
	PLOT DATE = 12/14/2015 10:57:03 AM	DATE -	REVISED - C. JUCIUS 01-31-07		SCALE: NONE SHEET NO. 1 OF 1 SHEETS STA. TO STA.	FED. ROAD DIST. NO. 1	ILLINOIS	FED. AID PROJECT DPC-M-4003(356)		

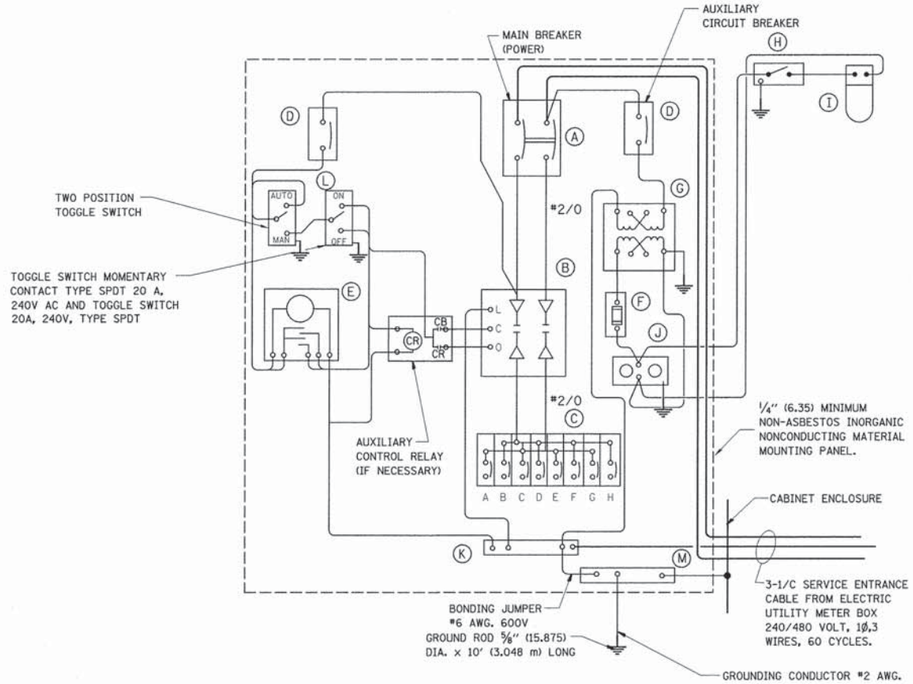

PANEL WIRING DIAGRAM

PANEL EQUIPMENT

BILL OF MATERIAL

ITEM	QUANTITY	DESCRIPTION
A	1	MAIN CIRCUIT BREAKER, 2 POLE, 600 VOLT 100 AMP. FRAME, 100 AMP. NON-INTERCHANGEABLE TRIP INTERRUPTING RATING NEMA-22000 AMP. AT 480 VOLT.
B	1	REMOTE CONTROL SWITCH, ELECTRICALLY OPERATED, MECHANICALLY HELD, 2 POLE, SINGLE THROW, 100 AMP., 600 VOLTS CONTROL CIRCUIT 240 VOLT.
C	8	CIRCUIT BREAKERS, 1 POLE, 100AMP. FRAME , 50 AMP. NON-INTERCHANGEABLE TRIP INTERRUPTING RATING NEMA-10,000 AMP. AT 240 V.
D	2	CONTROL CIRCUIT-CIRCUIT BREAKER. 1 POLE, 240 V., 100 AMP. FRAME, 15 AMP. NON-INTERCHANGEABLE TRIP INTERRUPTING RATING NEMA-5000 AMP. AT 240 V.
E	1	ASTRONOMIC MICROPROCESSOR-BASED 2-CHANNEL CONTROLLER [TIME SWITCH].
F	1	20 A., 120 V. FUSE.
G	1	1.5 KVA, SINGLE PHASE, ENCAPSULATED TRANSFORMER 240 X 480 / 120 X 240 VOLT, 60 Hz.
H	1	SPST 20A SWITCH ON DOOR, TO TURN LIGHT ON WHEN DOOR IS OPEN,
I	1	INCANDESCENT LIGHTING FIXTURE ENCLOSED AND GASKETED WITH 60 WATT, 120 V. LAMP.
J	1	20 A., 120 V., DUPLEX RECEPTACLE, GFCI.
K	1	COPPER GROUND BUS 1/4" (6.35) X 1" (25.4) X 12" (304.8 mm) LONG MOUNTED ON PANEL WITH LUGS AND 4 SPARE LUGS
L	1	TOGGLE SWITCHES MOUNTED IN 4" (101.6) X 4" (101.6 mm) BOX.
M	1	COPPER GROUND BUS 1/4" (6.35) X 1" (25.4) X 12" (304.8 mm) LONG MOUNTED ON PANEL WITH LUGS AND SPARE LUGS

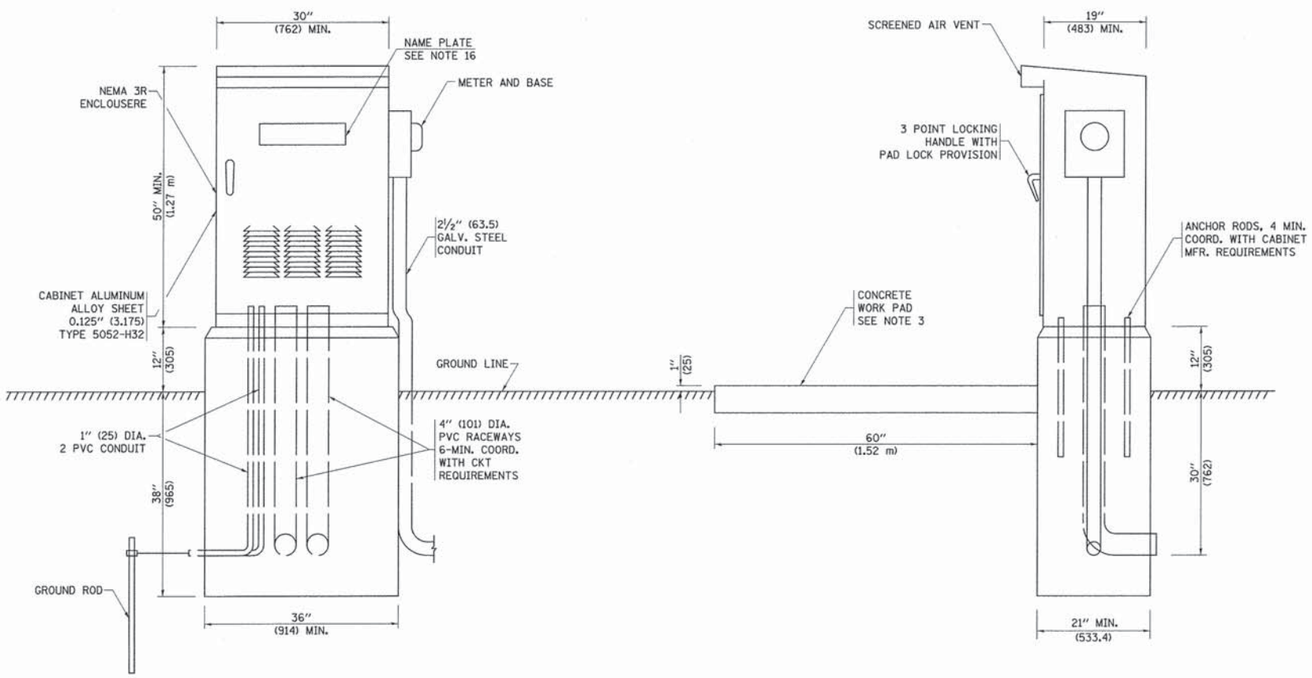

NOTES:

1. ALL DIMENSIONS ARE IN INCHES (MILLIMETERS) UNLESS OTHERWISE SHOWN.
2. FOUNDATION SIZE SHALL BE COORDINATED WITH CABINET SIZE AND MFR.
3. IN FRONT OF CONTROL CABINET DOOR, REMOVE VEGETATION AND 2" (50.8 mm) TOP SOIL, LEVEL THE AREA AND ON TOP, PLACE LENGTH WISE PARALLEL TO CONTROL CABINET, A CONCRETE PAD 36" (914.4 mm) x 60" (18.288 m) x 4" (101 mm) MIN. SIZE. THE COST OF LABOR AND MATERIALS ARE INCLUDED IN THE COST OF THE CONTROLLER.
4. DOOR SHALL BE CONSTRUCTED FROM SAME TYPE OF MATERIAL AND THICKNESS AS CABINET.
5. DOOR SHALL BE EQUIPPED WITH THREE POINT LATCHING MECHANISM WITH NYLON ROLLERS AT TOP THE BOTTOM.
6. DOOR HINGE SHALL BE A HEAVY GAUGE CONTINUOUS HINGE WITH A 1/4" (6.35 mm) DIA. STAINLESS STEEL HINGE PIN.
7. ALL EXTERNAL HARDWARE SHALL BE STAINLESS STEEL.
8. CONTROL WIRING TO BE #12 AWG, 600V, TYPE "SIS" GRAY SWITCH BOARD WIRE, STRANDED COPPER.
9. METER BOX SHALL BE MOUNTED ON THE SIDE OF CONTROL CABINET, NEAR TO THE SERVICE POLE.
10. CABINETS SHALL BE PRIMED AND PAINTED AS SPECIFIED.
11. THE HEADS OF CONNECTORS SCREWS SHALL BE PAINTED WHITE FOR NEUTRAL BAR CONNECTION AND GREEN FOR GROUND BAR CONNECTORS.
12. ALL WIRING WITHIN THE CABINET SHALL BE COLOR CODED AS INDICATED.
    R = RED BL = BLUE W = WHITE
    B = BLACK Y = YELLOW G = GREEN
13. PROVIDE SEALING GROMMETS FOR ALL OPEN WIRING EXTENDED FROM DEVICES IN BOXES OR CABINETS WITHIN THE CONTROL CABINET.
14. ALL WIRING SHALL BE NEATLY DRESSED AND SUPPORTED.
15. THE CONTROLLER SHALL BE CONSTRUCTED TO U.L. STD. 508 AND BEAR THE U.L. LABEL "ENCLOSED INDUSTRIAL CONTROL PANEL".
16. 12" (304.8) X 16" (406.4 mm) STAINLESS STEEL EXTERIOR NAMEPLATE SHALL BE ENGRAVED TO "STATE OF ILLINOIS LIGHTING CONTROLS" UNLESS OTHERWISE SPECIFIED.

FILE NAME = L:\Naperville\15230-01_WashingtonPh2\Dra\CADD_Sheets\sht-01 Standards_BE215.dgn	USER NAME = Peter Ross	DESIGNED -	REVISED - 08-20-04	STATE OF ILLINOIS DEPARTMENT OF TRANSPORTATION
		DRAWN -	REVISED -	
	PLOT SCALE = 50.0000 ' / in.	CHECKED -	REVISED -	
	PLOT DATE = 12/14/2015 10:57:04 AM	DATE -	REVISED -	

LIGHTING CONTROLLER
SINGLE DOOR

SCALE: NONE | SHEET NO. 1 OF 1 SHEETS | STA. | TO STA.

F.A. RTE.	SECTION	COUNTY	TOTAL SHEETS	SHEET NO.
2552	14-00161-00-BR	WILL	86	72
	BE-215	CONTRACT NO. 61C38		

FED. ROAD DIST. NO. 1 | ILLINOIS | FED. AID PROJECT DPC-M-4003(356)

LIGHT POLE FOUNDATION DEPTH TABLE
40 FT. (12.192 m) TO 47.5 FT. (14.478 m) MOUNTING HEIGHT

SOIL CONDITIONS	DESIGN DEPTH "D" OF FOUNDATION	
	SINGLE ARM POLE	TWIN ARM POLE
SOFT CLAY Qu = 0.375 TON/SQ. FT.	13'-0" (3.96 m)	15'-0" (4.57 m)
MEDIUM CLAY Qu = 0.75 TON/SQ.FT	9'-6" (2.09 m)	10'-9" (3.23 m)
STIFF CLAY Qu = 1.50 TON/SQ. FT.	7'-0" (2.13 m)	8'-0" (2.44 m)
LOOSE SAND ø = 34°	9'-0" (2.74 m)	10'-0" (3.05 m)
MEDIUM SAND ø = 37.5°	8'-3" (2.52 m)	9'-0" (2.74 m)
DENSE SAND ø = 40°	7'-9" (2.36 m)	9'-0" (2.74 m)

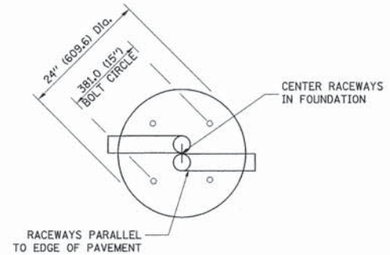

TOP VIEW

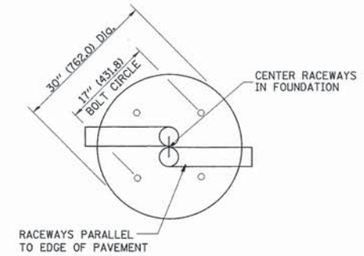

TOP VIEW

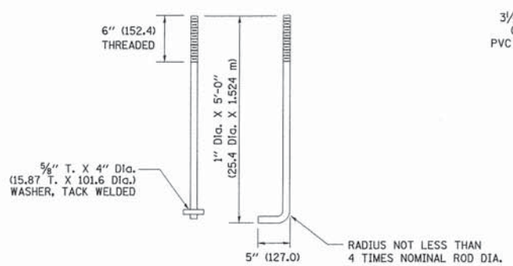

ANCHOR ROD DETAIL

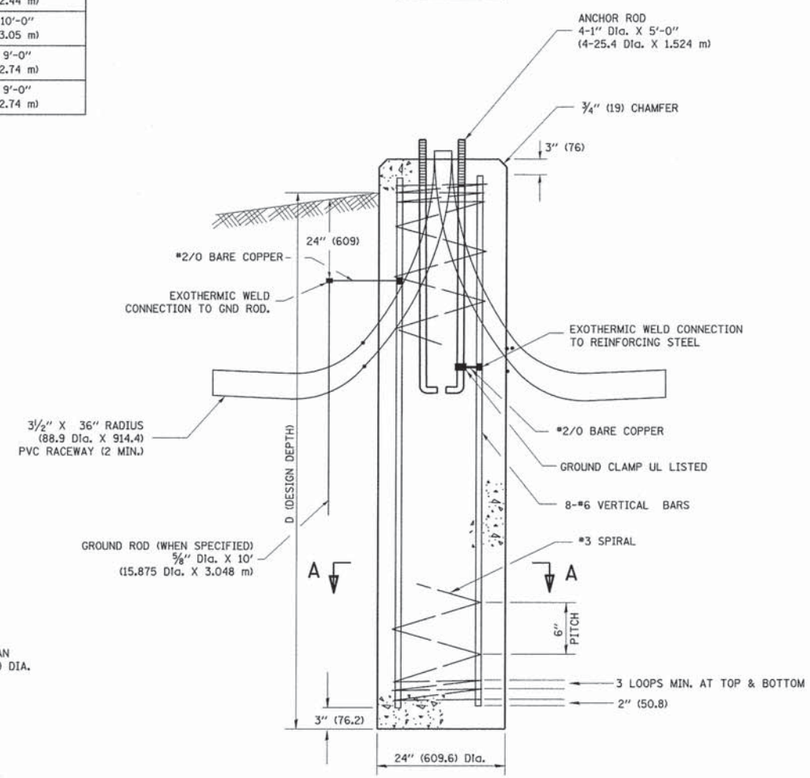

FOUNDATION DETAIL

NOTES

1. ALL DIMENSIONS ARE IN INCHES (MILLIMETERS) UNLESS OTHERWISE SHOWN.
2. THE ANCHOR RODS AND RACEWAYS SHALL BE PROPERLY SECURED IN PLACE BEFORE THE CONCRETE IN PLACED.
3. THE FOUNDATION SHALL NOT PROTRUDE MORE THAN 100MM (4 IN.) ABOVE THE FINISHED GRADE WITHIN A 60 IN. (1.5 m) CHORD ACROSS THE FOUNDATION, WITH ANCHOR RODS INCLUDED, IN ACCORDANCE WITH AASHTO GUIDELINES. IF THE FOUNDATION HEIGHT, INCLUDING ANCHOR RODS, EXTENDS BEYOND THESE SPECIFIED LIMITS, THE FOUNDATION SHALL BE REPLACED AT THE CONTRACTOR'S EXPENSE. SEE FOUNDATION EXTENSION DETAIL.
4. THE HOLE FOR THE FOUNDATION SHALL BE MADE BY DRILLING WITH AN AUGER, OF THE SAME DIAMETER AS THE FOUNDATION. IF SOIL CONDITIONS REQUIRE THE USE OF A LINER TO FORM THE HOLE, THE LINER SHALL BE WITHDRAWN AS THE CONCRETE IS DEPOSITED.
5. THE TOP OF THE FOUNDATION SHALL BE CONSTRUCTED LEVEL. A LINER OR FORM SHALL BE USED TO PRODUCE A UNIFORM SMOOTH SIDE TO THE TOP OF THE FOUNDATION. FOUNDATION TOP SHALL BE CHAMFERED 3/4-IN. (20 mm).
6. THE CONCRETE SHALL BE CLASS SI. CONCRETE SHALL CURE ACCORDING TO ARTICLE 1020.13 BEFORE LIGHT POLES ARE INSTALLED.
7. THE ANCHOR ROD SHALL BE A HOOK ROD TYPE. COLD BENDING OF THE ANCHOR ROD WILL NOT BE ALLOWED. THE RADIUS OF THE HOOK BEND SHALL NOT BE LESS THAN 4 TIMES THE NOMINAL DIAMETER OF THE ANCHOR ROD. A TACK WELDED ANCHOR ROD MAY BE SUBSTITUTED WITH THE APPROVAL OF THE ENGINEER.
8. THE ANCHOR RODS SHALL BE ACCORDING TO ASTM F1554 GRADE 725 (GRADE 105). NUTS SHALL BE HEXAGON NUTS ACCORDING TO ASTM A 194 2H OR ASTM A 563 DH, AND WASHERS SHALL BE ACCORDING TO ASTM F 436.
9. ANCHOR RODS, NUTS AND WASHERS SHALL BE COMPLETELY GALVANIZED BY EITHER THE HOT-DIPPED PROCESS CONFORMING WITH AASHTO M 232, THE MECHANICAL PLATING METHOD CONFORMING TO AASHTO M 298, CLASS 50 WITH A MAXIMUM COATING THICKNESS OF 150 UM(6 MILS) OR THE ELECTROLYTIC PROCESS ACCORDING TO ASTM F 1136.
10. THE ANCHOR RODS SHALL BE THREADED A MINIMUM OF 6 INCHES (150 mm) WITH A MINIMUM OF 3 INCHES (75 mm) OF THREADED ANCHOR ROD EMBEDDED IN THE FOUNDATION.
11. ANCHOR RODS SHALL PROJECT 2 3/4" (69.9 mm) ABOVE THE TOP OF THE FOUNDATION. IF BREAKAWAY COUPLINGS ARE SPECIFIED, THE CONTRACTOR SHALL CAREFULLY COORDINATE THE ANCHOR ROD PROJECTION WITH THE INSTALLATION REQUIREMENTS OF THE BREAKAWAY COUPLINGS.
12. THE CONTRACTOR SHALL USE A #3 SPIRAL AT 6" (152.4 mm) PITCH OR MAY SUBSTITUTE #3 TIES AT 12" (304.8 mm) O.C. WITH THE APPROVAL OF THE ENGINEER.
13. THE CABLE TRENCHES AND FOUNDATION SHALL BE BACK FILLED AND COMPACTED AS SPECIFIED BEFORE THE LIGHT POLE IS ERECTED.
14. THE RACEWAYS SHALL PROJECT 1" (25.4 mm) ABOVE THE TOP OF THE FOUNDATION.

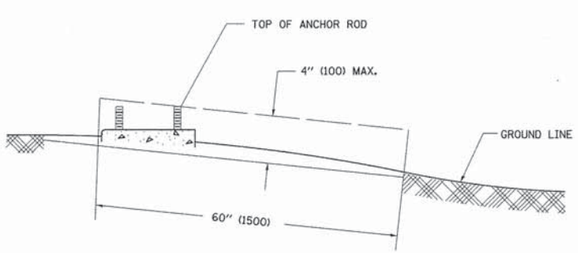

FOUNDATION EXTENSION DETAIL

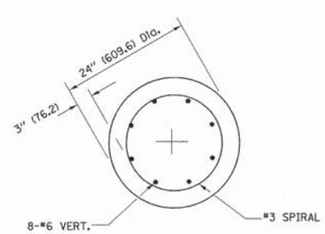

SECTION A-A

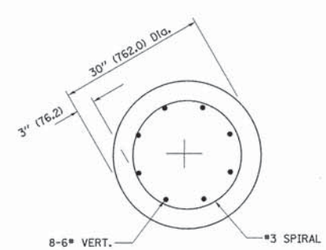

SECTION A-A

FILE NAME = L:\Naperville\15230-01_WashingtonPh2\Dra\CADD_Sheets\sht-D1 Standards_BE301.dgn	USER NAME = Peter Ross	DESIGNED -	REVISED - 04-22-02	STATE OF ILLINOIS DEPARTMENT OF TRANSPORTATION
		DRAWN -	REVISED -	
	PLOT SCALE = 1.0000 ' / in.	CHECKED -	REVISED -	
	PLOT DATE = 12/14/2015 10:57:04 AM	DATE -	REVISED -	

LIGHT POLE FOUNDATION
40' (12.192 m) TO 47 1/2' (14.478 m) M.H. 15" (381 mm) BOLT CIRCLE

SCALE: NONE | SHEET NO. 1 OF 1 SHEETS | STA. | TO STA.

F.A. RTE.	SECTION	COUNTY	TOTAL SHEETS	SHEET NO.
2552	14-00161-00-BR	WILL	86	73
	BE-301	CONTRACT NO. 61C38		
FED. ROAD DIST. NO. 1	ILLINOIS	FED. AID PROJECT DPC-M-4003(356)		

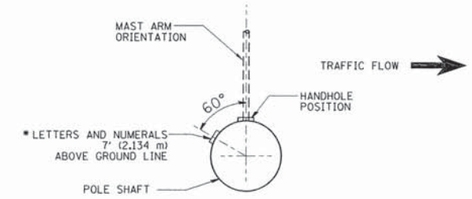

POSITION OF HANDHOLE AND POLE NUMBER FOR SINGLE MAST ARM POLES MOUNTED ON BRIDGE PARAPET OR BARRIER WALL

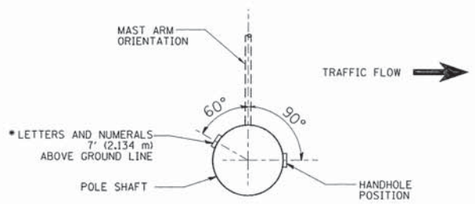

POSITION OF HANDHOLE AND POLE NUMBER FOR SINGLE MAST ARM POLES

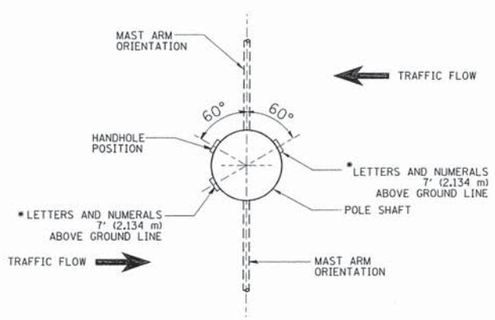

POSITION OF HANDHOLE AND POLE NUMBER FOR TWIN MAST ARM POLES

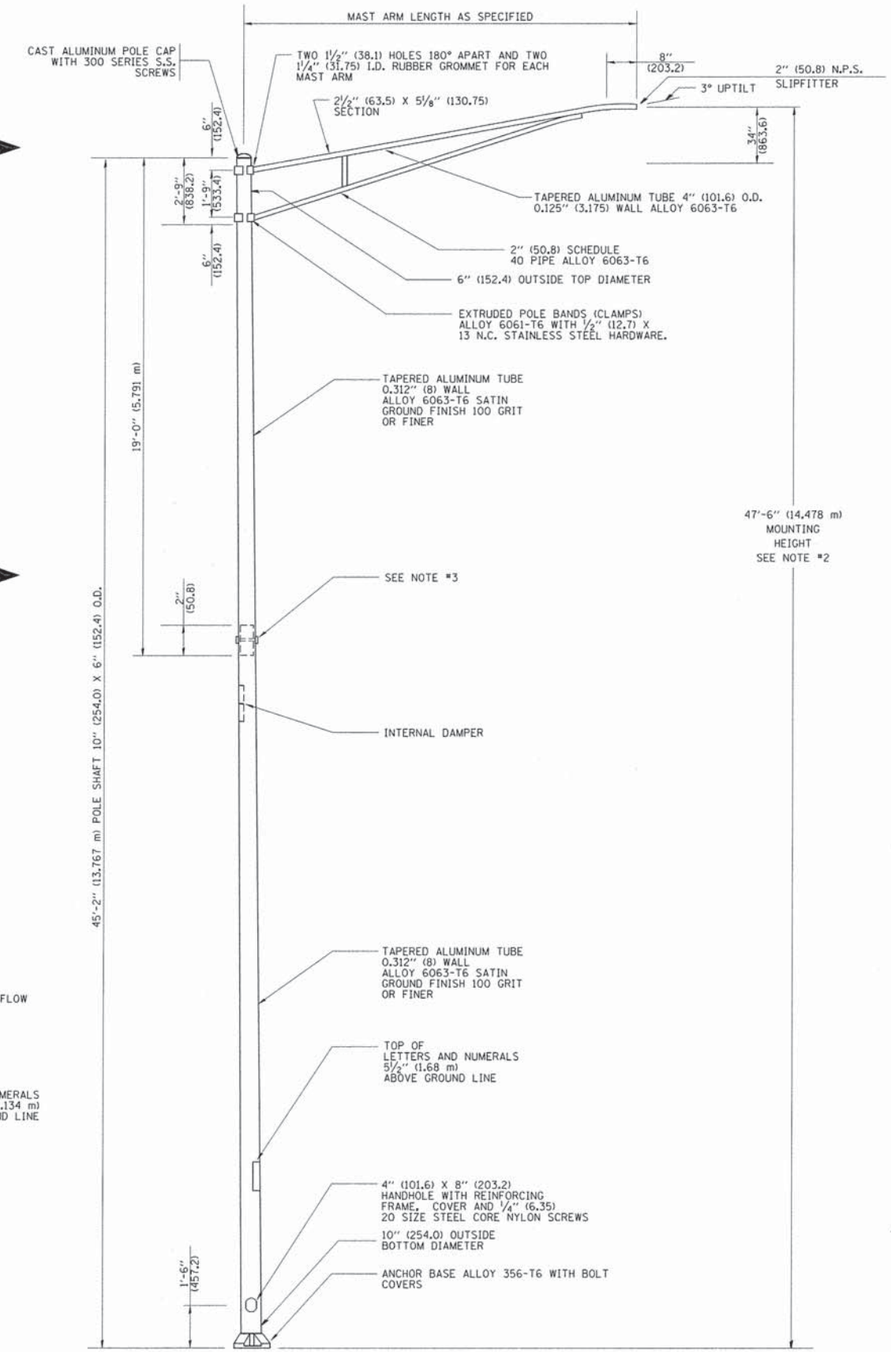

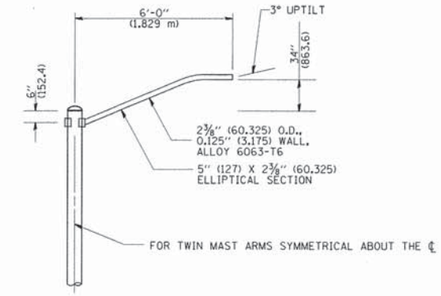

6' (1.8 m) SINGLE MEMBER MAST ARM

(N.T.S.)

NOTES:

1. ALL DIMENSIONS ARE IN INCHES (MILLIMETERS) UNLESS OTHERWISE SHOWN.
2. MOUNTING HEIGHT IS DEFINED AS THE DISTANCE FROM THE CENTERLINE OF THE TENON TO THE BOTTOM OF THE ANCHOR BASE.
3. TWO PIECE SHAFT WILL BE MATCHED MARKED AND INTERCHANGEABLE BETWEEN DIFFERENT UNITS. FIELD DRILLING OF THE HOLES WILL NOT BE ALLOWED.
4. THE LIGHT POLE WILL MEET AASHTO DESIGN CRITERIA AS SPECIFIED.
5. THE INSTALLING CONTRACTOR WILL PROVIDE A UL LISTED GROUNDING CONNECTOR. BURNDY K2C23, T&B SP4DL OR APPROVED EQUAL.
6. LIGHT POLES WILL NOT BE INSTALLED WITHOUT MAST ARMS AND LUMINAIRES.
7. LIGHT POLES WILL BE SET PLUMB ON THE FOUNDATION WITHOUT THE USE OF LEVELING NUTS, WASHERS OR SHIMS.
8. LIGHTING UNIT IDENTIFICATION NUMBERS SHALL BE INSTALLED BEFORE THE LIGHTING UNIT IS ENERGIZED.

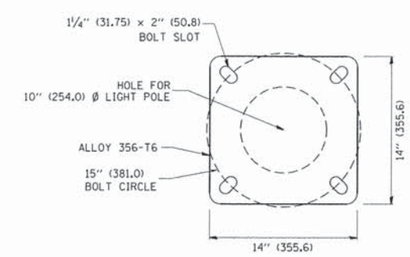

LIGHT POLE BASE PLATE DETAIL

15 INCH (381.0) BOLT CIRCLE

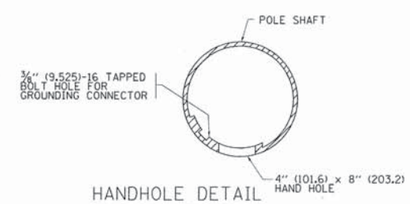

HANDHOLE DETAIL

(N.T.S.)

FILE NAME = c:\pw_work\pwidot\drivakosgn\d0108315\be400.dgn	USER NAME = drivakosgn	DESIGNED -	REVISED - R. TOMSONS 09-06-00	STATE OF ILLINOIS DEPARTMENT OF TRANSPORTATION	ALUMINUM LIGHT POLE 47'-6" (14.478 m) MOUNTING HEIGHT	F.A. RTE.	SECTION	COUNTY	TOTAL SHEETS / SHEET NO.
		DRAWN -	REVISED - R. TOMSONS 09-03-03			2552	14-00161-00-BR	WILL	86 / 74
	PLOT SCALE = 50.000 ' / in.	CHECKED -	REVISED - R. TOMSONS 01-18-13				BE-400	CONTRACT NO. 61C38	
	PLOT DATE = 2/27/2013	DATE -	REVISED -		SCALE: NONE / SHEET NO. 1 OF 1 SHEETS / STA. / TO STA.	FED. ROAD DIST. NO. 1	ILLINOIS	FED. AID PROJECT	

00:Jan 22/2013 1:46:39 PM User=drivakosgn

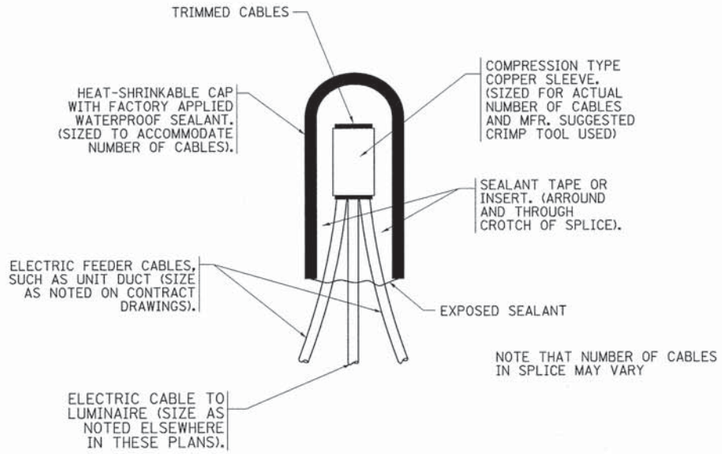

TYPICAL SPLICE DETAIL

N.T.S.

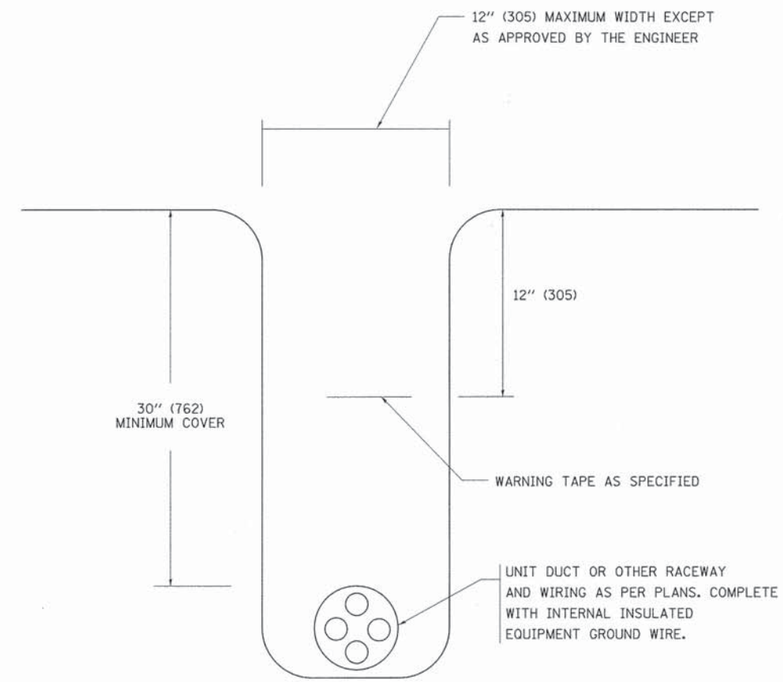

TYPICAL WIRING IN TRENCH DETAIL

N.T.S.

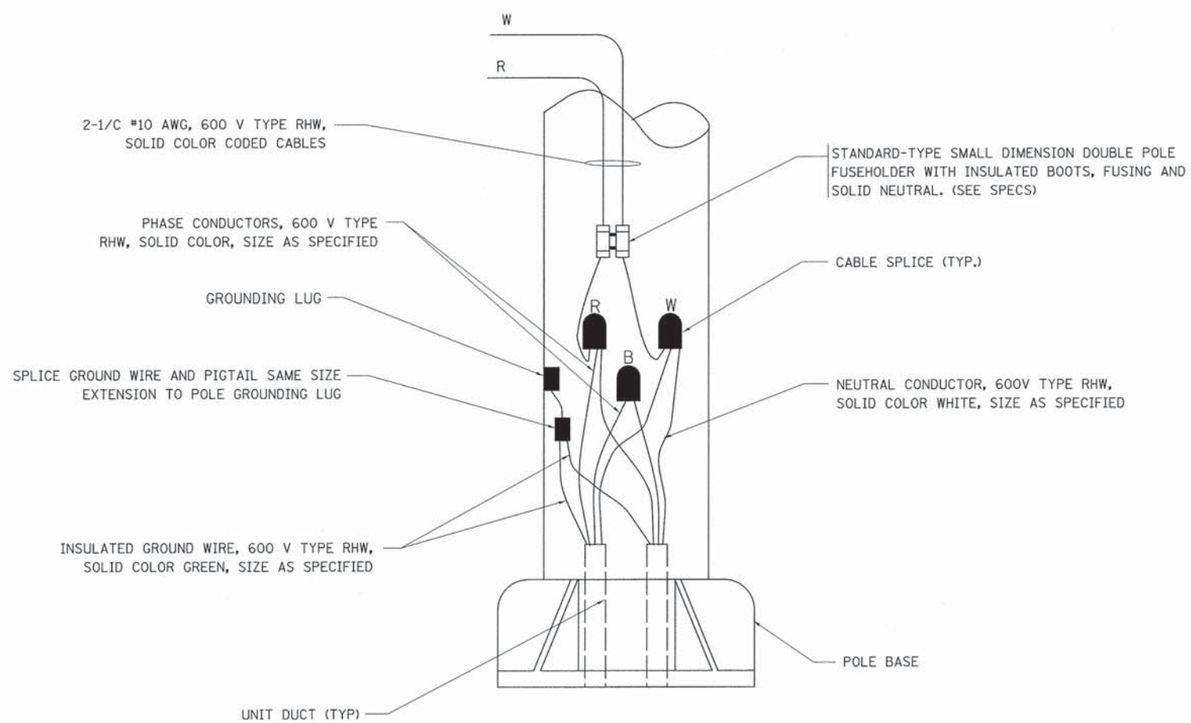

POLE WIRING DETAIL

N.T.S.

FILE NAME = L:\Naperville\15230-01_WashingtonPh2\Dra\CADD_Sheets\sht-01 Standards_BE702.dgn	USER NAME = Peter Ross	DESIGNED -	REVISED - 08-08-03	STATE OF ILLINOIS DEPARTMENT OF TRANSPORTATION	MISC. ELECTRICAL DETAILS SHEET A	F.A. RTE.	SECTION	COUNTY	TOTAL SHEETS	SHEET NO.
		DRAWN -	REVISED -			2552	14-00161-00-BR	WILL	86	75
	PLOT SCALE = 1.0000 ' / in.	CHECKED -	REVISED -			BE-702		CONTRACT NO. 61C38		
	PLOT DATE = 12/14/2015 10:57:05 AM	DATE -	REVISED -		SCALE: NONE / SHEET NO. 1 OF 1 SHEETS / STA. / TO STA.	FED. ROAD DIST. NO. 1	ILLINOIS	FED. AID PROJECT DPC-M-4003(356)		

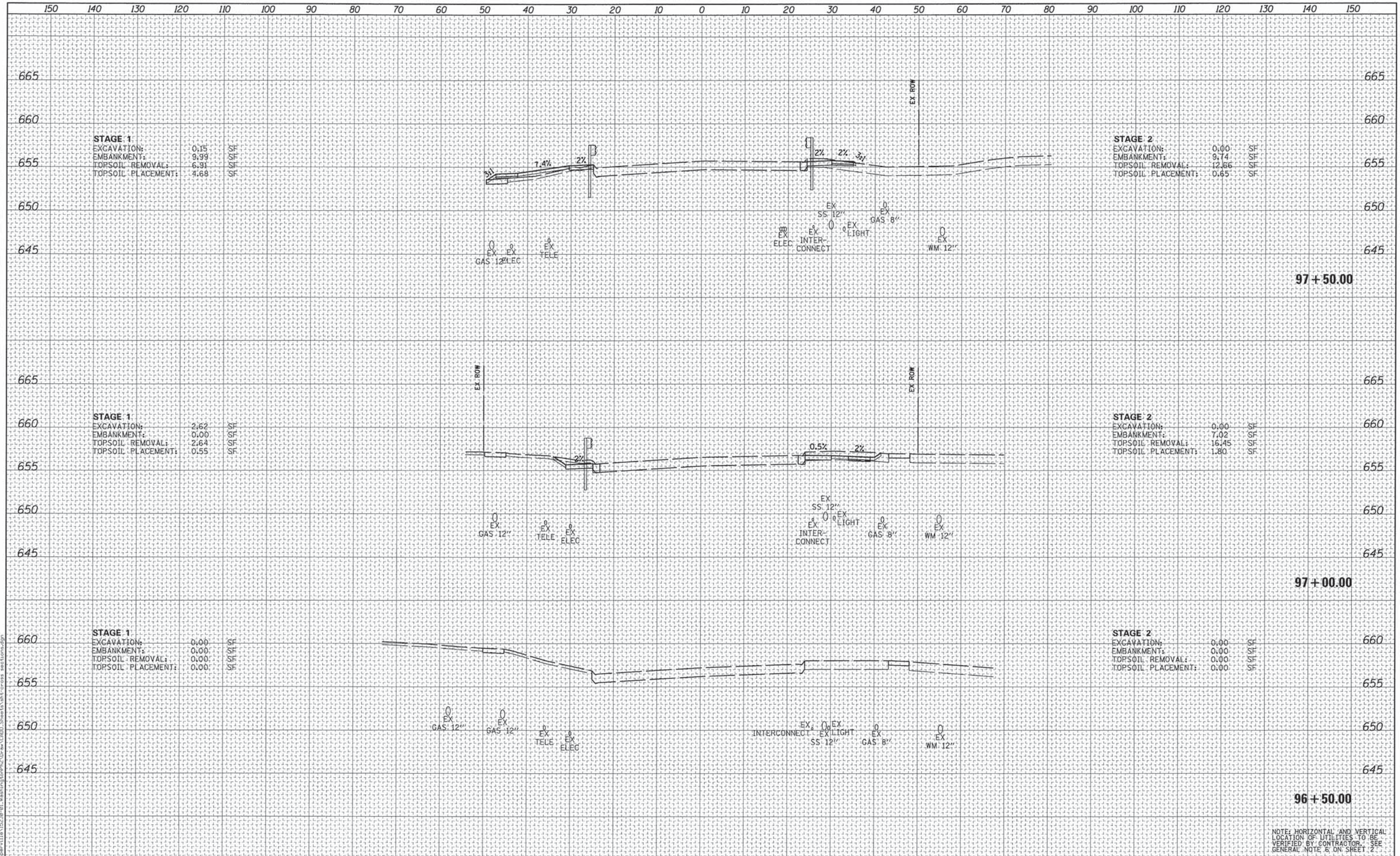

NOTE: HORIZONTAL AND VERTICAL LOCATION OF UTILITIES TO BE VERIFIED BY CONTRACTOR. - SEE GENERAL NOTE 6 ON SHEET 2

FINAL SURVEY		BY	DATE
NOTE BOOK	SURVEYED		
	PLOTTED		
	TEMPLATE		
	AREAS		
NO.	AREAS CHECKED		

ORIGINAL SURVEY		BY	DATE
NOTE BOOK	SURVEYED		
	PLOTTED		
	TEMPLATE		
	AREAS		
NO.	AREAS CHECKED		

FILE NAME = L:\Naperville\15228-01_Washington\Ph2\Draw\CADD_Sheets\sht-cross sections.dgn

CMT
License No. 184-000613 © Copyright CMT, Inc.

USER NAME = Peter Ross	DESIGNED - PFR	REVISED -	
	DRAWN - PFR	REVISED -	
PLOT SCALE = 10.0005 ' / in.	CHECKED - PFR	REVISED -	
PLOT DATE = 1/12/2016 1:59:02 PM	DATE - 12/7/2015	REVISED -	

STATE OF ILLINOIS
DEPARTMENT OF TRANSPORTATION

CROSS SECTIONS
WASHINGTON STREET

SCALE: 1"=10'/5' | SHEET 1 OF 11 SHEETS | STA. 96+50.00 TO STA. 97+50.00

F.A.U. RTE.	SECTION	COUNTY	TOTAL SHEETS	SHEET NO.
2552	14-00161-00-BR	WILL	86	76
		CONTRACT NO. 61C38		
		ILLINOIS FED. AID PROJECT DPC-M-4003(356)		

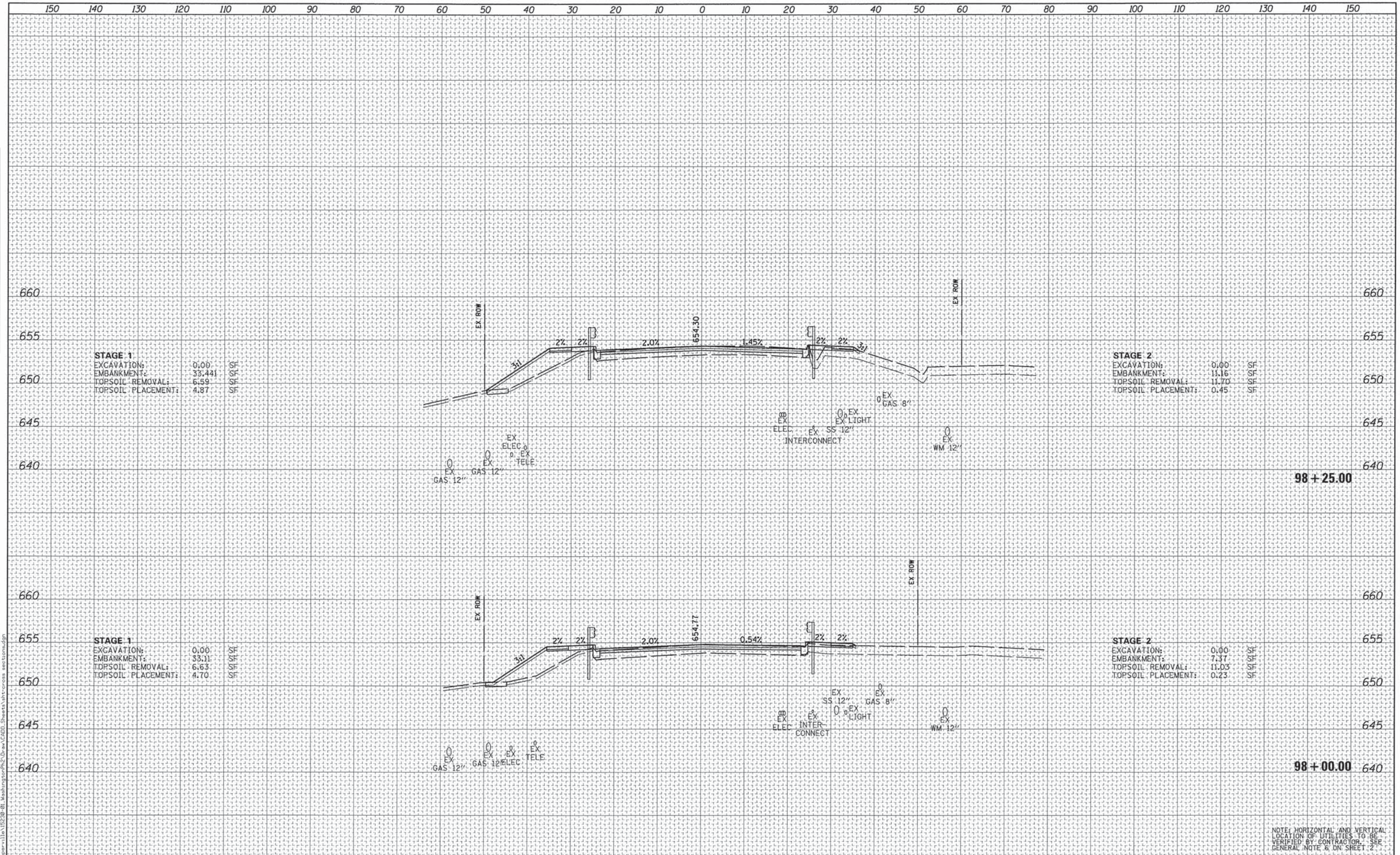

STAGE 1

EXCAVATION:	0.00	SF
EMBANKMENT:	33.441	SF
TOPSOIL REMOVAL:	6.59	SF
TOPSOIL PLACEMENT:	4.87	SF

STAGE 2

EXCAVATION:	0.00	SF
EMBANKMENT:	11.16	SF
TOPSOIL REMOVAL:	11.70	SF
TOPSOIL PLACEMENT:	0.45	SF

STAGE 1

EXCAVATION:	0.00	SF
EMBANKMENT:	33.11	SF
TOPSOIL REMOVAL:	6.63	SF
TOPSOIL PLACEMENT:	4.70	SF

STAGE 2

EXCAVATION:	0.00	SF
EMBANKMENT:	7.37	SF
TOPSOIL REMOVAL:	11.03	SF
TOPSOIL PLACEMENT:	0.23	SF

NOTE: HORIZONTAL AND VERTICAL LOCATION OF UTILITIES TO BE VERIFIED BY CONTRACTOR. SEE GENERAL NOTE 6 ON SHEET 2

FINAL SURVEY	BY	DATE
SURVEYED		
PLOTTED		
TEMPLATE		
AREAS		
AREAS CHECKED		
NOTE BOOK NO.		

ORIGINAL SURVEY	BY	DATE
SURVEYED		
PLOTTED		
TEMPLATE		
AREAS		
AREAS CHECKED		
NOTE BOOK NO.		

FILE NAME = L:\Naperville\15238-01_Washington\Ph2\Dr-aw\CADD_Sheets\sht-cross sections.dgn

CMT
License No. 184-000613 © Copyright CMT, Inc.

USER NAME = Peter Ross	DESIGNED - PFR	REVISED -	
	DRAWN - PFR	REVISED -	
PLOT SCALE = 10.0005 ' / in.	CHECKED - PFR	REVISED -	
PLOT DATE = 1/12/2016 1:59:02 PM	DATE - 12/7/2015	REVISED -	

STATE OF ILLINOIS
DEPARTMENT OF TRANSPORTATION

CROSS SECTIONS
WASHINGTON STREET

SCALE: 1"=10'/5' | SHEET 2 OF 11 SHEETS | STA. 98+00.00 TO STA. 98+25.00

F.A.U. RTE.	SECTION	COUNTY	TOTAL SHEETS	SHEET NO.
2552	14-00161-00-BR	WILL	86	77

CONTRACT NO. 61C38

ILLINOIS FED. AID PROJECT DPC-M-4003(356)

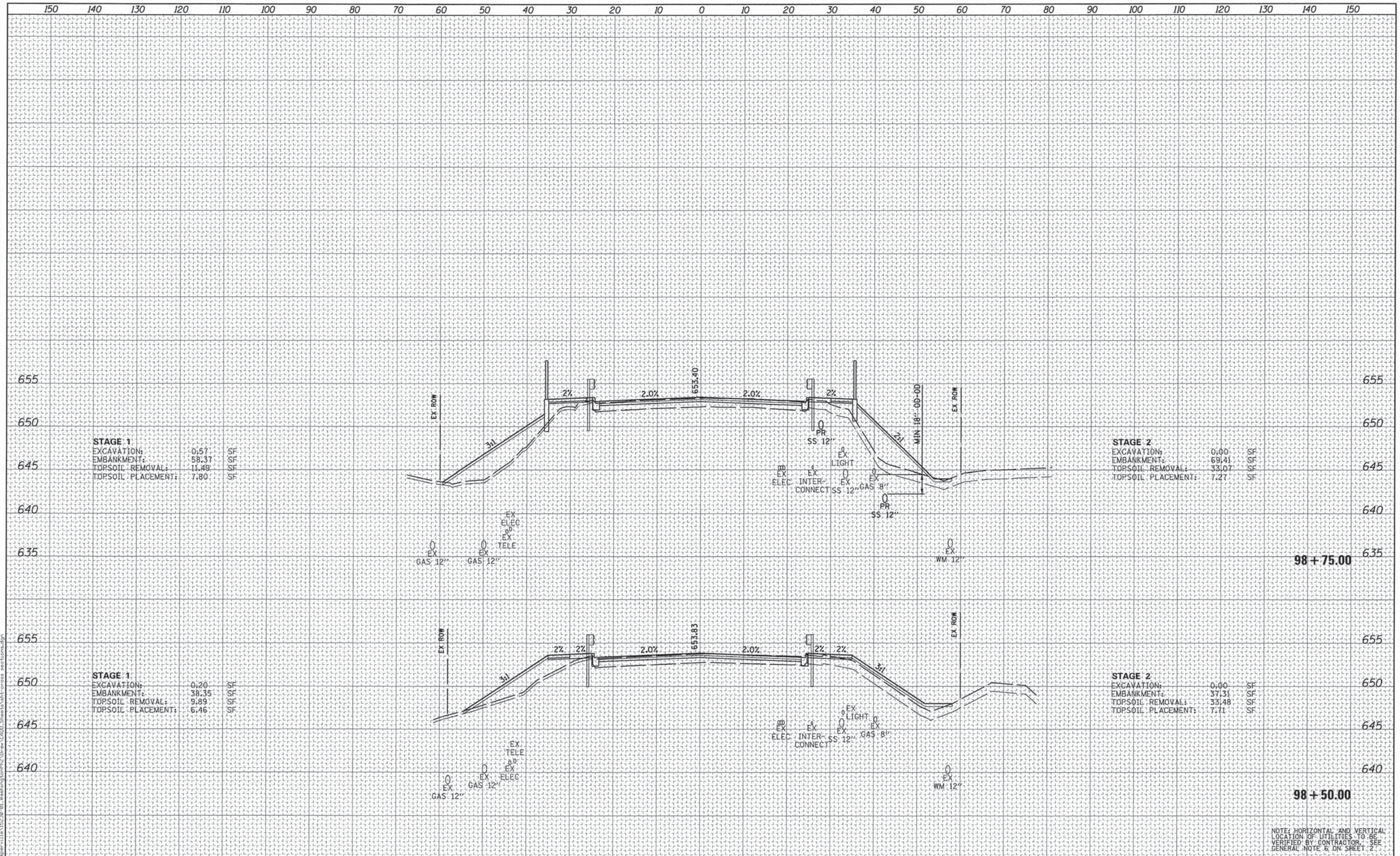

STAGE 1

EXCAVATION:	0.57	SF
EMBANKMENT:	58.37	SF
TOPSOIL REMOVAL:	11.49	SF
TOPSOIL PLACEMENT:	7.80	SF

STAGE 2

EXCAVATION:	0.00	SF
EMBANKMENT:	69.41	SF
TOPSOIL REMOVAL:	33.07	SF
TOPSOIL PLACEMENT:	7.27	SF

STAGE 1

EXCAVATION:	0.20	SF
EMBANKMENT:	38.35	SF
TOPSOIL REMOVAL:	9.89	SF
TOPSOIL PLACEMENT:	6.46	SF

STAGE 2

EXCAVATION:	0.00	SF
EMBANKMENT:	37.31	SF
TOPSOIL REMOVAL:	33.48	SF
TOPSOIL PLACEMENT:	7.71	SF

NOTE: HORIZONTAL AND VERTICAL LOCATION OF UTILITIES TO BE VERIFIED BY CONTRACTOR. SEE GENERAL NOTE 6, ON SHEET 2

FINAL SURVEY	BY	DATE
NOTE BOOK		
NO.		

SURVEYED
PLOTTED
TEMPLATE
AREAS
AREAS CHECKED

ORIGINAL SURVEY	BY	DATE
NOTE BOOK		
NO.		

SURVEYED
PLOTTED
TEMPLATE
AREAS
AREAS CHECKED

FILE NAME = L:\Naperville\15230-01_Washington\Ph2\Draw\CADD_Sheets\sht-cross sections.dgn

CMT
License No. 184-000613 © Copyright CMT, Inc.

USER NAME = Peter Ross	DESIGNED - PFR	REVISED -
	DRAWN - PFR	REVISED -
PLOT SCALE = 10.0000 ' / in.	CHECKED - PFR	REVISED -
PLOT DATE = 1/12/2016 1:59:02 PM	DATE - 12/7/2015	REVISED -

STATE OF ILLINOIS
DEPARTMENT OF TRANSPORTATION

CROSS SECTIONS
WASHINGTON STREET

SCALE: 1"=10'/5' | SHEET 3 OF 11 SHEETS | STA. 98+50.00 TO STA. 98+75.00

F.A.U. RTE.	SECTION	COUNTY	TOTAL SHEETS	SHEET NO.
2552	14-00161-00-BR	WILL	86	78

CONTRACT NO. 61C38

ILLINOIS FED. AID PROJECT DPC-M-4003(356)

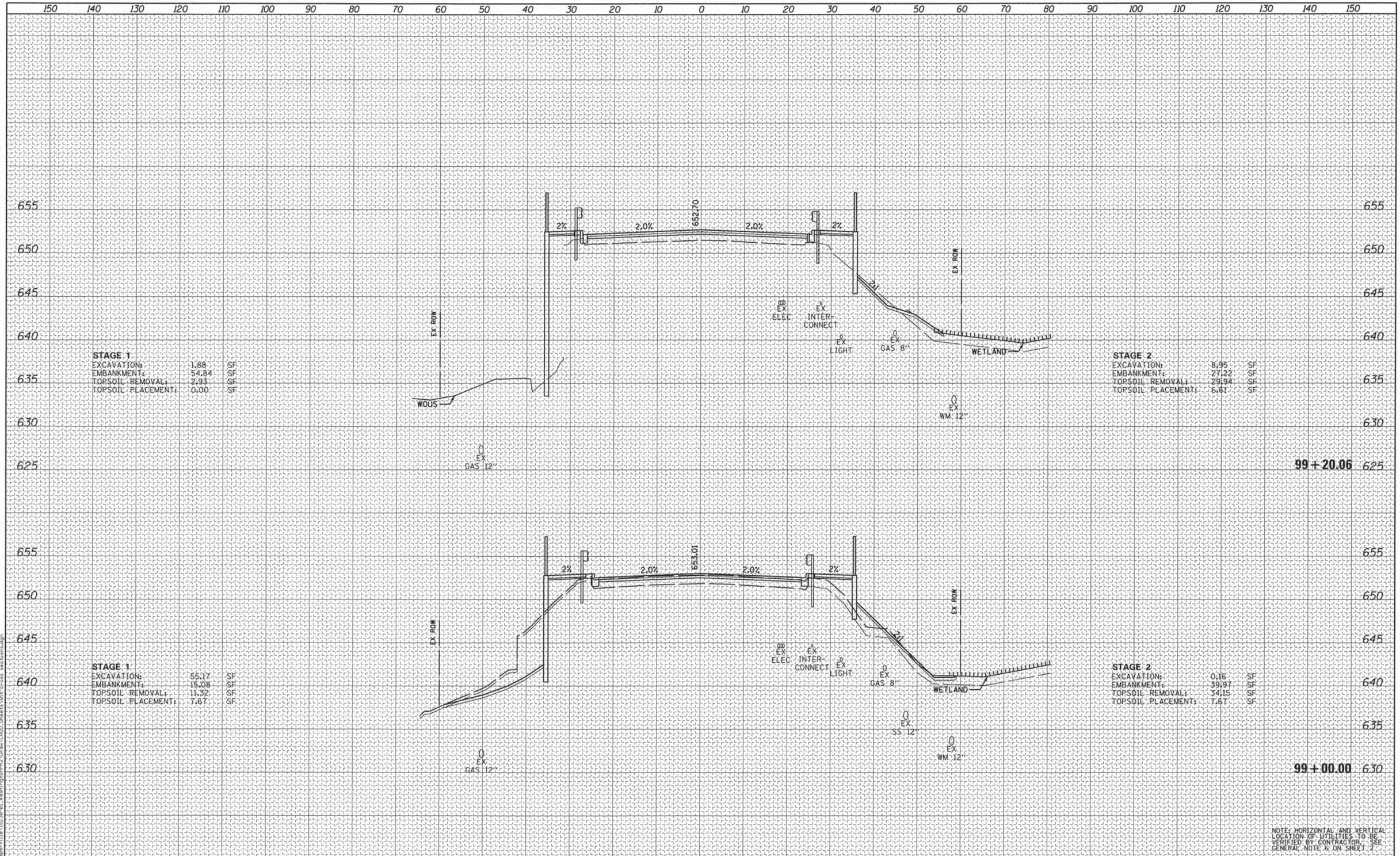

STAGE 1

EXCAVATION:	1.88	SF
EMBANKMENT:	54.84	SF
TOPSOIL REMOVAL:	2.93	SF
TOPSOIL PLACEMENT:	0.00	SF

STAGE 2

EXCAVATION:	8.95	SF
EMBANKMENT:	27.22	SF
TOPSOIL REMOVAL:	29.94	SF
TOPSOIL PLACEMENT:	6.61	SF

STAGE 1

EXCAVATION:	55.17	SF
EMBANKMENT:	15.08	SF
TOPSOIL REMOVAL:	11.32	SF
TOPSOIL PLACEMENT:	7.67	SF

STAGE 2

EXCAVATION:	0.16	SF
EMBANKMENT:	39.97	SF
TOPSOIL REMOVAL:	34.15	SF
TOPSOIL PLACEMENT:	7.67	SF

NOTE: HORIZONTAL AND VERTICAL LOCATION OF UTILITIES TO BE VERIFIED BY CONTRACTOR. SEE GENERAL NOTE 6 ON SHEET 2

FINAL SURVEY	BY	DATE
SURVEYED		
PLOTTED		
TEMPLATE		
AREAS		
AREAS CHECKED		
NOTE BOOK NO.		

ORIGINAL SURVEY	BY	DATE
SURVEYED		
PLOTTED		
TEMPLATE		
AREAS		
AREAS CHECKED		
NOTE BOOK NO.		

FILE NAME = L:\Naperville\15238-01_Washington\Ph2\Draw\CADD_Sheets\xhtcross sections.dgn

CMT
License No. 184-000613 ©Copyright CMT, Inc.

USER NAME = Peter Ross	DESIGNED - PFR	REVISED -
	DRAWN - PFR	REVISED -
PLOT SCALE = 10.0005 ' / in.	CHECKED - PFR	REVISED -
PLOT DATE = 1/12/2016 1:59:03 PM	DATE - 12/7/2015	REVISED -

STATE OF ILLINOIS
DEPARTMENT OF TRANSPORTATION

CROSS SECTIONS
WASHINGTON STREET

SCALE: 1"=10'/5' | SHEET 4 OF 11 SHEETS | STA. 99+00.00 TO STA. 99+20.06

F.A.U. RTE.	SECTION	COUNTY	TOTAL SHEETS	SHEET NO.
2552	14-00161-00-BR	WILL	86	79

CONTRACT NO. 61C38

ILLINOIS FED. AID PROJECT DPC-M-4003(356)

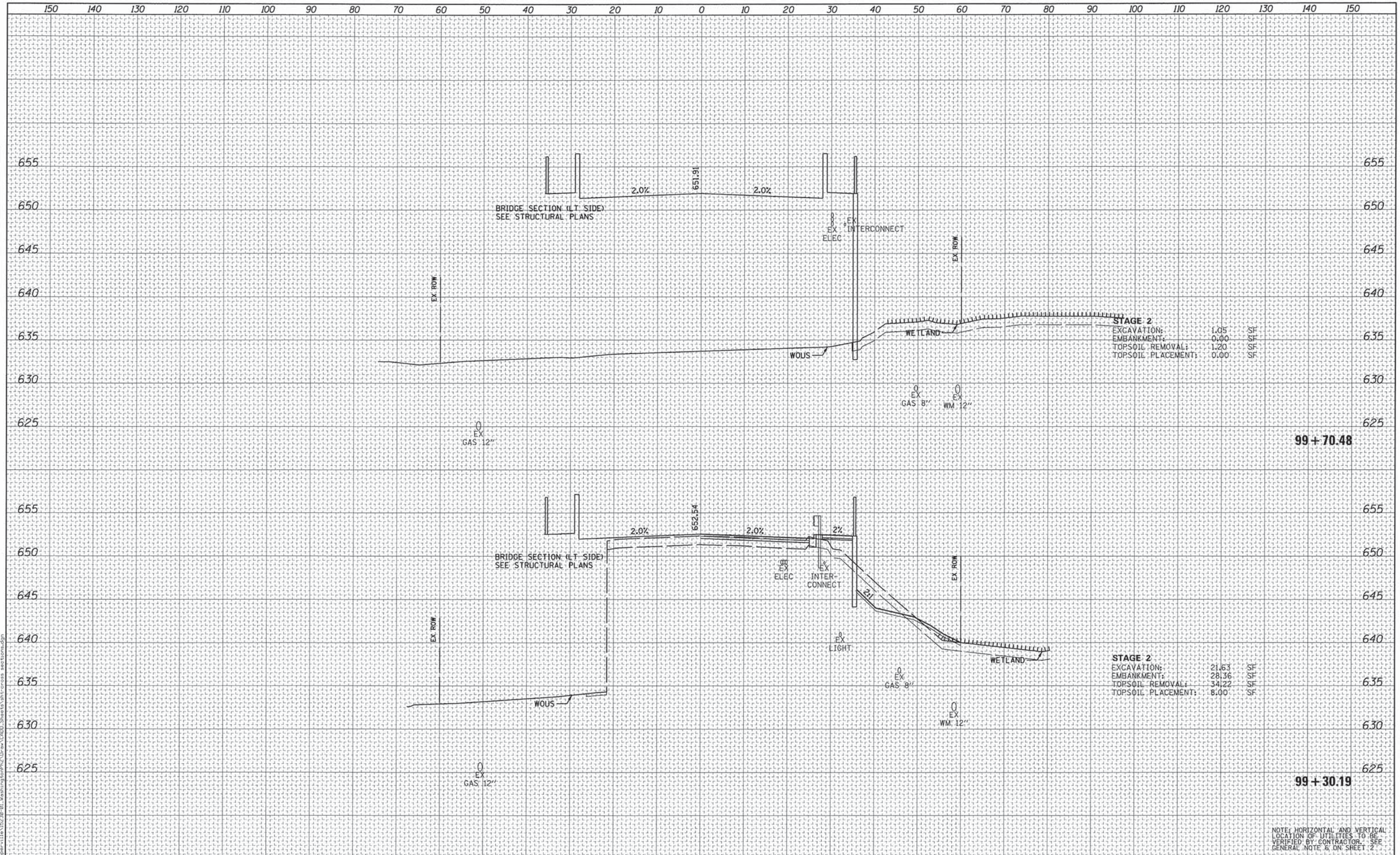

NOTE: HORIZONTAL AND VERTICAL LOCATION OF UTILITIES TO BE VERIFIED BY CONTRACTOR. SEE GENERAL NOTE 6 ON SHEET 2

FINAL SURVEY		BY	DATE
NOTE BOOK	SURVEYED		
	PLOTTED		
	TEMPLATE		
	AREAS		
	AREAS CHECKED		
NO.			

ORIGINAL SURVEY		BY	DATE
NOTE BOOK	SURVEYED		
	PLOTTED		
	TEMPLATE		
	AREAS		
	AREAS CHECKED		
NO.			

FILE NAME = L:\Naperville\15230-01_Washington\Ph2\Draw\CADD_Sheets\sht-cross sections.dgn

CMT
License No. 184-000613 © Copyright CMT, Inc.

USER NAME = Peter Ross	DESIGNED - PFR	REVISED -	
	DRAWN - PFR	REVISED -	
PLOT SCALE = 10.0005 ' / in.	CHECKED - PFR	REVISED -	
PLOT DATE = 1/12/2016 1:59:03 PM	DATE - 12/7/2015	REVISED -	

STATE OF ILLINOIS
DEPARTMENT OF TRANSPORTATION

CROSS SECTIONS
WASHINGTON STREET

SCALE: 1"=10'/5' | SHEET 5 OF 11 SHEETS | STA. 99+30.19 TO STA. 99+70.48

F.A.U. RTE.	SECTION	COUNTY	TOTAL SHEETS	SHEET NO.
2552	14-00161-00-BR	WILL	86	80

CONTRACT NO. 61C38

ILLINOIS FED. AID PROJECT DPC-M-4003(356)

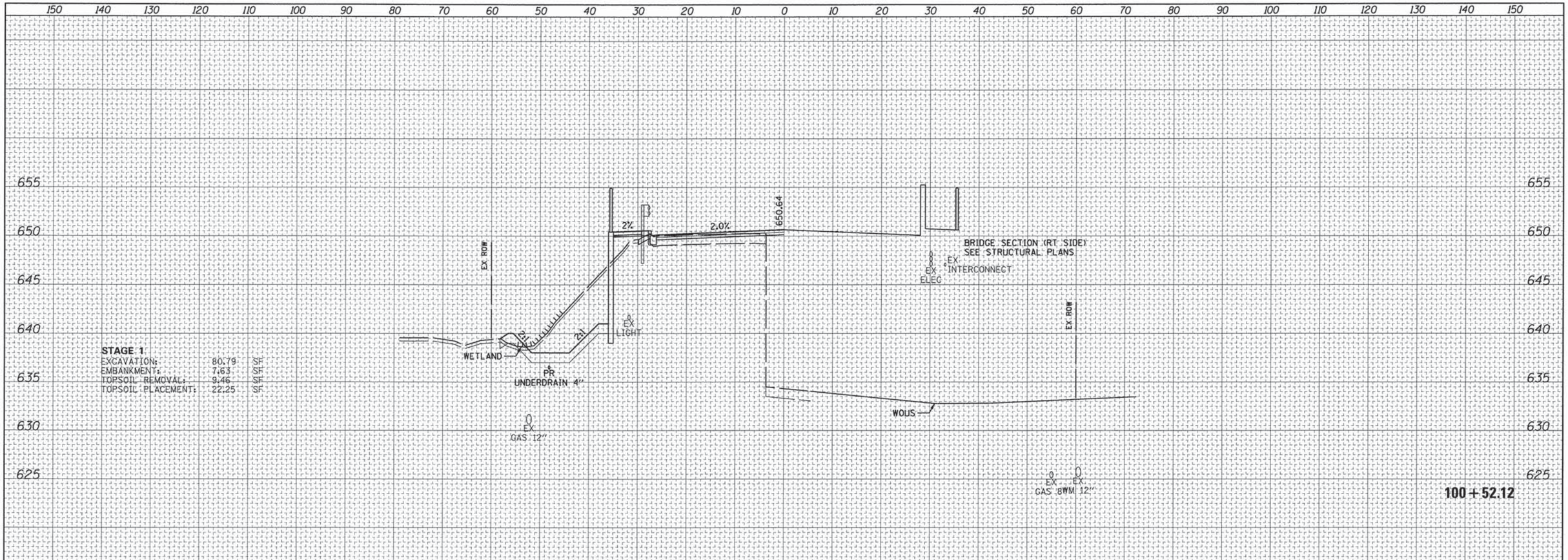

STAGE 1

EXCAVATION:	80.79	SF
EMBANKMENT:	7.63	SF
TOPSOIL REMOVAL:	9.46	SF
TOPSOIL PLACEMENT:	22.25	SF

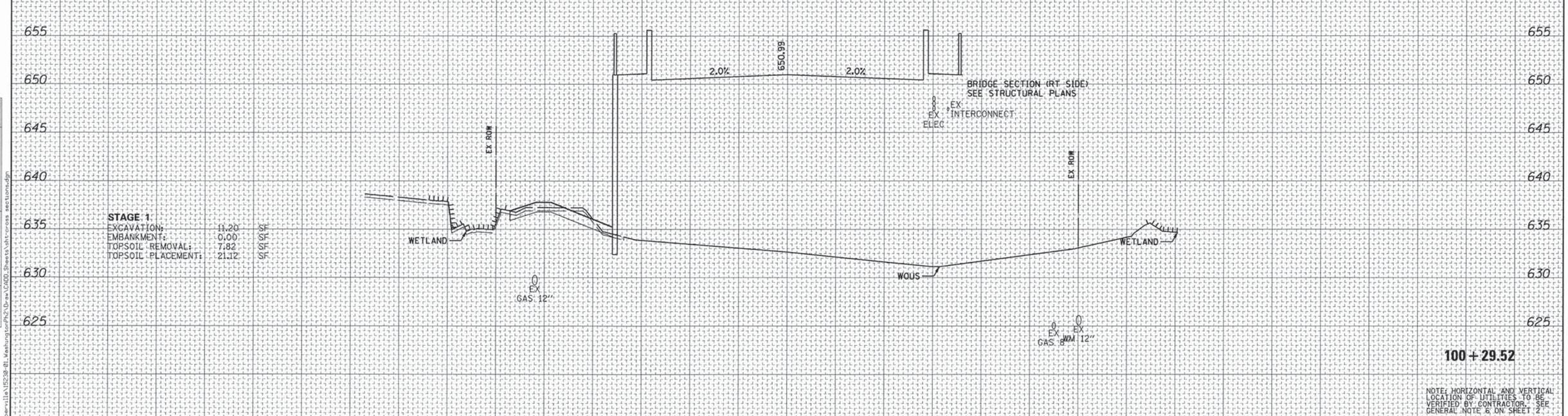

STAGE 1

EXCAVATION:	11.20	SF
EMBANKMENT:	0.00	SF
TOPSOIL REMOVAL:	7.82	SF
TOPSOIL PLACEMENT:	21.12	SF

NOTE: HORIZONTAL AND VERTICAL LOCATION OF UTILITIES TO BE VERIFIED BY CONTRACTOR. SEE GENERAL NOTE 6 ON SHEET 2.

FINAL SURVEY | NOTE BOOK NO. | SURVEYED | PLOTTED | TEMPLATE | AREAS | AREAS CHECKED | BY | DATE

ORIGINAL SURVEY | NOTE BOOK NO. | SURVEYED | PLOTTED | TEMPLATE | AREAS | AREAS CHECKED | BY | DATE

FILE NAME = L:\Naperville\15230-01_Washington\Ph2\D-a\CADD_Sheets\sht-cross sections.dgn

CMT
License No. 184-000613 ©Copyright CMT, Inc.

USER NAME = Peter Ross	DESIGNED - PFR	REVISED -	
	DRAWN - PFR	REVISED -	
PLOT SCALE = 10.0005 ' / in.	CHECKED - PFR	REVISED -	
PLOT DATE = 1/12/2016 1:59:03 PM	DATE - 12/7/2015	REVISED -	

STATE OF ILLINOIS
DEPARTMENT OF TRANSPORTATION

CROSS SECTIONS
WASHINGTON STREET

SCALE: 1"=10'/5' | SHEET 6 OF 11 SHEETS | STA. 100+29.52 TO STA.100+52.12

F.A.U. RTE.	SECTION	COUNTY	TOTAL SHEETS	SHEET NO.
2552	14-00161-00-BR	WILL	86	81

CONTRACT NO. 61C38

ILLINOIS FED. AID PROJECT DPC-M-4003(356)

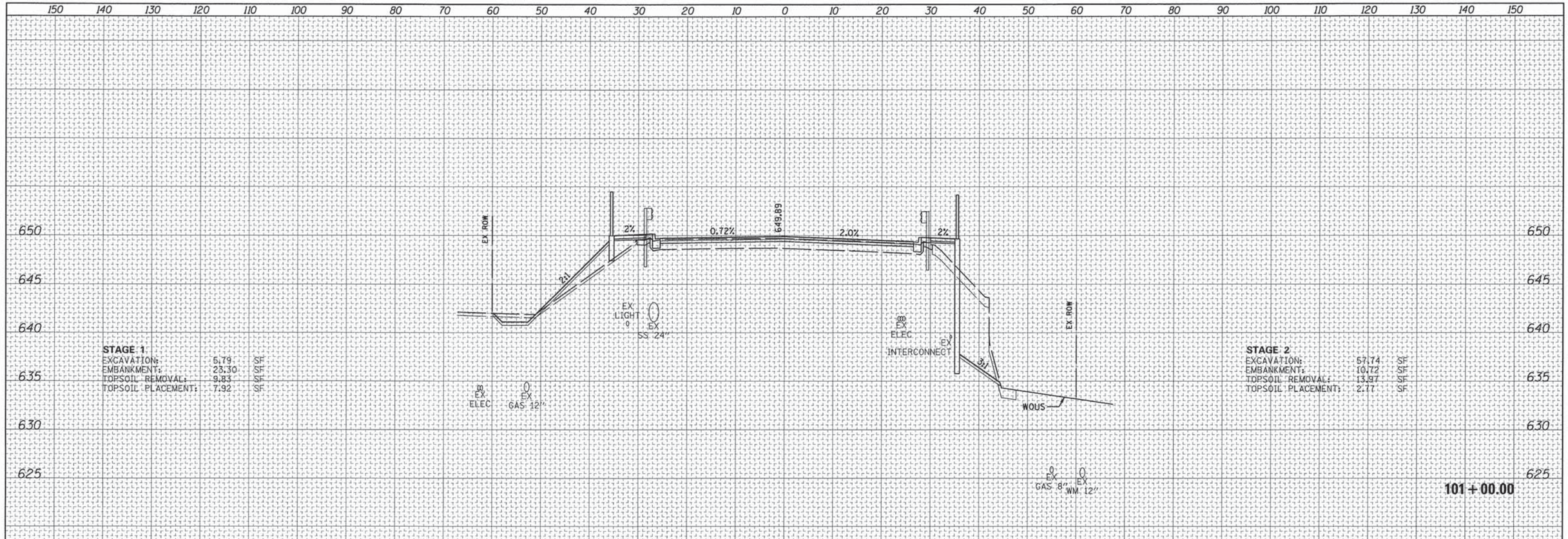

STAGE 1

EXCAVATION:	5.79	SF
EMBANKMENT:	23.30	SF
TOPSOIL REMOVAL:	9.83	SF
TOPSOIL PLACEMENT:	7.92	SF

STAGE 2

EXCAVATION:	57.74	SF
EMBANKMENT:	10.72	SF
TOPSOIL REMOVAL:	13.97	SF
TOPSOIL PLACEMENT:	2.77	SF

101 + 00.00

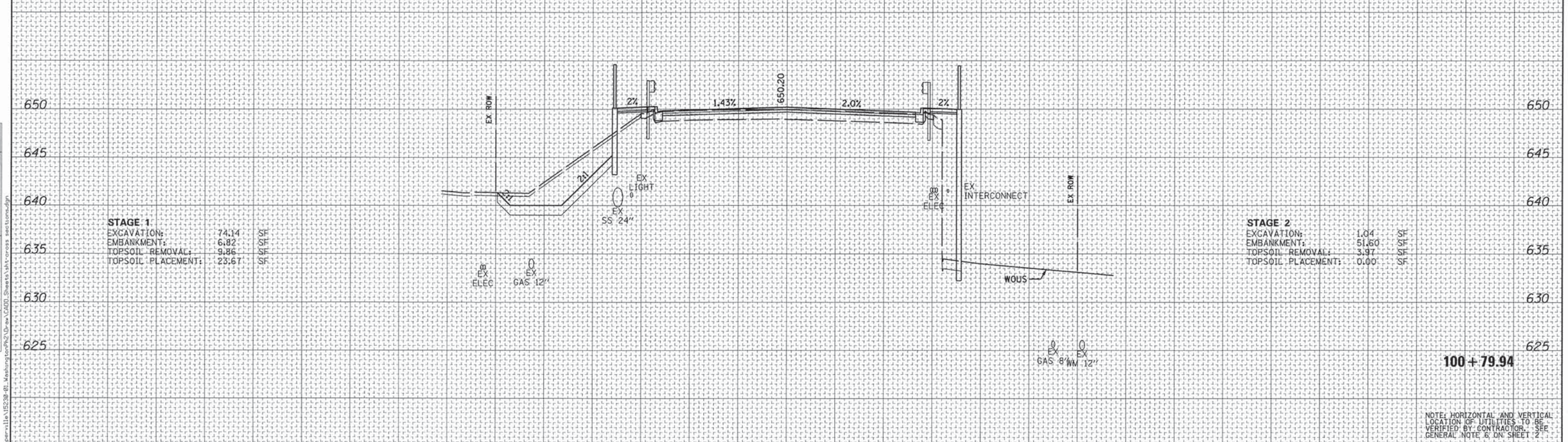

STAGE 1

EXCAVATION:	74.14	SF
EMBANKMENT:	6.82	SF
TOPSOIL REMOVAL:	9.86	SF
TOPSOIL PLACEMENT:	23.67	SF

STAGE 2

EXCAVATION:	1.04	SF
EMBANKMENT:	51.60	SF
TOPSOIL REMOVAL:	3.97	SF
TOPSOIL PLACEMENT:	0.00	SF

100 + 79.94

NOTE: HORIZONTAL AND VERTICAL LOCATION OF UTILITIES TO BE VERIFIED BY CONTRACTOR. SEE GENERAL NOTE 6 ON SHEET 2

FINAL SURVEY	BY	DATE
SURVEYED		
PLOTTED		
TEMPLATE		
AREAS		
AREAS CHECKED		
NOTE BOOK		
NO.		

ORIGINAL SURVEY	BY	DATE
SURVEYED		
PLOTTED		
TEMPLATE		
AREAS		
AREAS CHECKED		
NOTE BOOK		
NO.		

FILE NAME = L:\Naperville\15238-01_Washington\Ph2\Dgn\CADD_Sheets\shtcross sections.dgn

CMT
License No. 184-000613 © Copyright CMT, Inc.

USER NAME = Peter Ross	DESIGNED - PFR	REVISED -	
	DRAWN - PFR	REVISED -	
PLOT SCALE = 10.0005 ' / in.	CHECKED - PFR	REVISED -	
PLOT DATE = 1/12/2016 1:59:04 PM	DATE - 12/7/2015	REVISED -	

STATE OF ILLINOIS
DEPARTMENT OF TRANSPORTATION

CROSS SECTIONS
WASHINGTON STREET

SCALE: 1"=10'/5' | SHEET 7 OF 11 SHEETS | STA. 100+79.94 TO STA. 101+00.00

F.A.U. RTE.	SECTION	COUNTY	TOTAL SHEETS	SHEET NO.
2552	14-00161-00-BR	WILL	86	82

CONTRACT NO. 61C38

ILLINOIS FED. AID PROJECT DPC-M-4003(356)

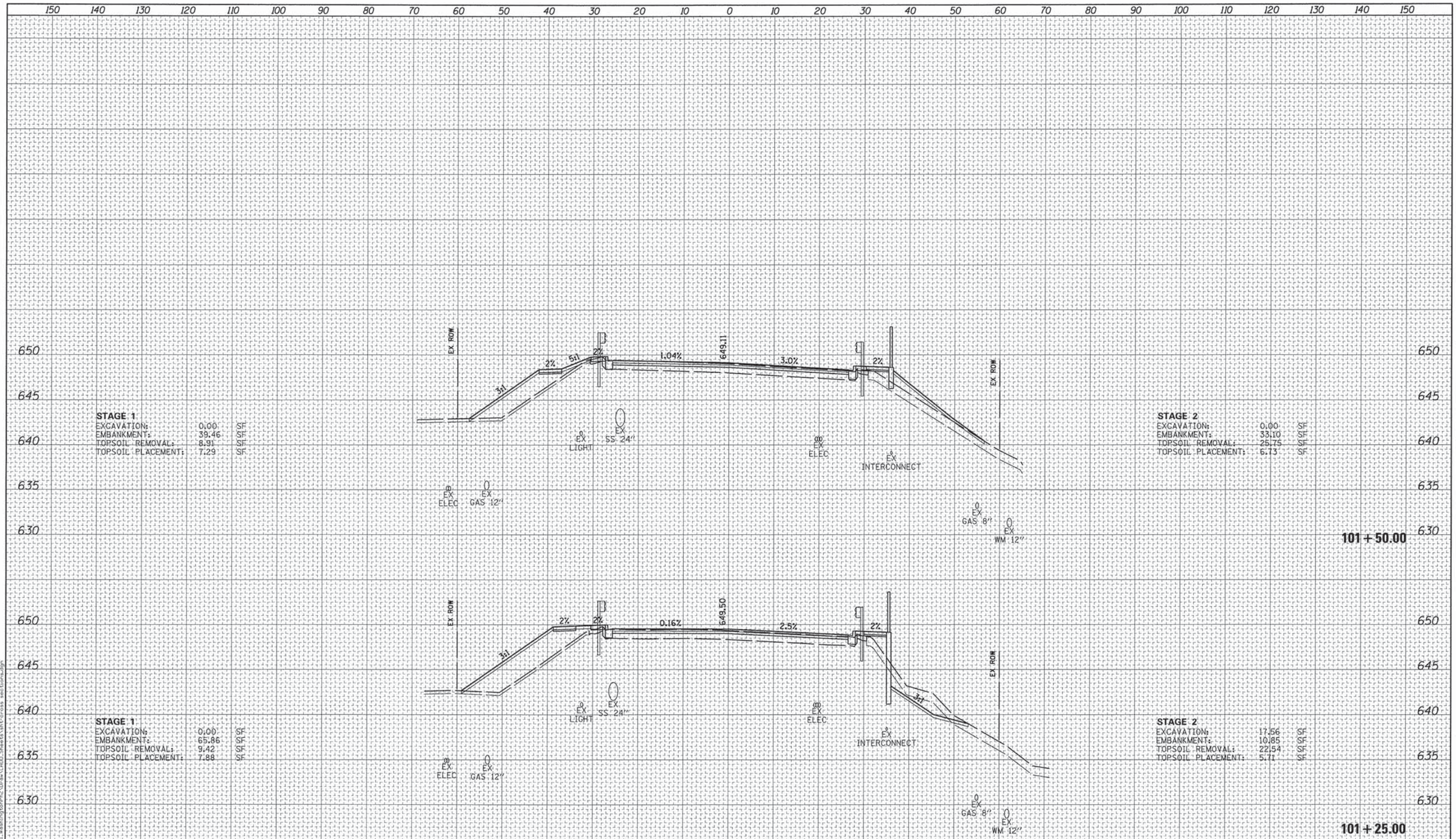

NOTE: HORIZONTAL AND VERTICAL LOCATION OF UTILITIES TO BE VERIFIED BY CONTRACTOR. - SEE GENERAL NOTE 6 ON SHEET 2

FINAL SURVEY	BY	DATE
SURVEYED		
PLOTTED		
TEMPLATE		
AREAS		
AREAS CHECKED		
NOTE BOOK NO.		

ORIGINAL SURVEY	BY	DATE
SURVEYED		
PLOTTED		
TEMPLATE		
AREAS		
AREAS CHECKED		
NOTE BOOK NO.		

FILE NAME = L:\Naperville\15238-01_Washington Ph2\Draw\CADD_Sheets\sht-cross sections.dgn

CMT
License No. 184-000613 © Copyright CMT, Inc.

USER NAME = Peter Ross	DESIGNED - PFR	REVISED -	
	DRAWN - PFR	REVISED -	
PLOT SCALE = 10.0005 ' / in.	CHECKED - PFR	REVISED -	
PLOT DATE = 1/12/2016 1:59:04 PM	DATE - 12/7/2015	REVISED -	

STATE OF ILLINOIS
DEPARTMENT OF TRANSPORTATION

CROSS SECTIONS
WASHINGTON STREET

SCALE: 1"=10'/5' | SHEET 8 OF 11 SHEETS | STA. 101+25.00 TO STA. 101+50.00

F.A.U. RTE.	SECTION	COUNTY	TOTAL SHEETS	SHEET NO.
2552	14-00161-00-BR	WILL	86	83

CONTRACT NO. 61C38

ILLINOIS FED. AID PROJECT DPC-M-4003(356)

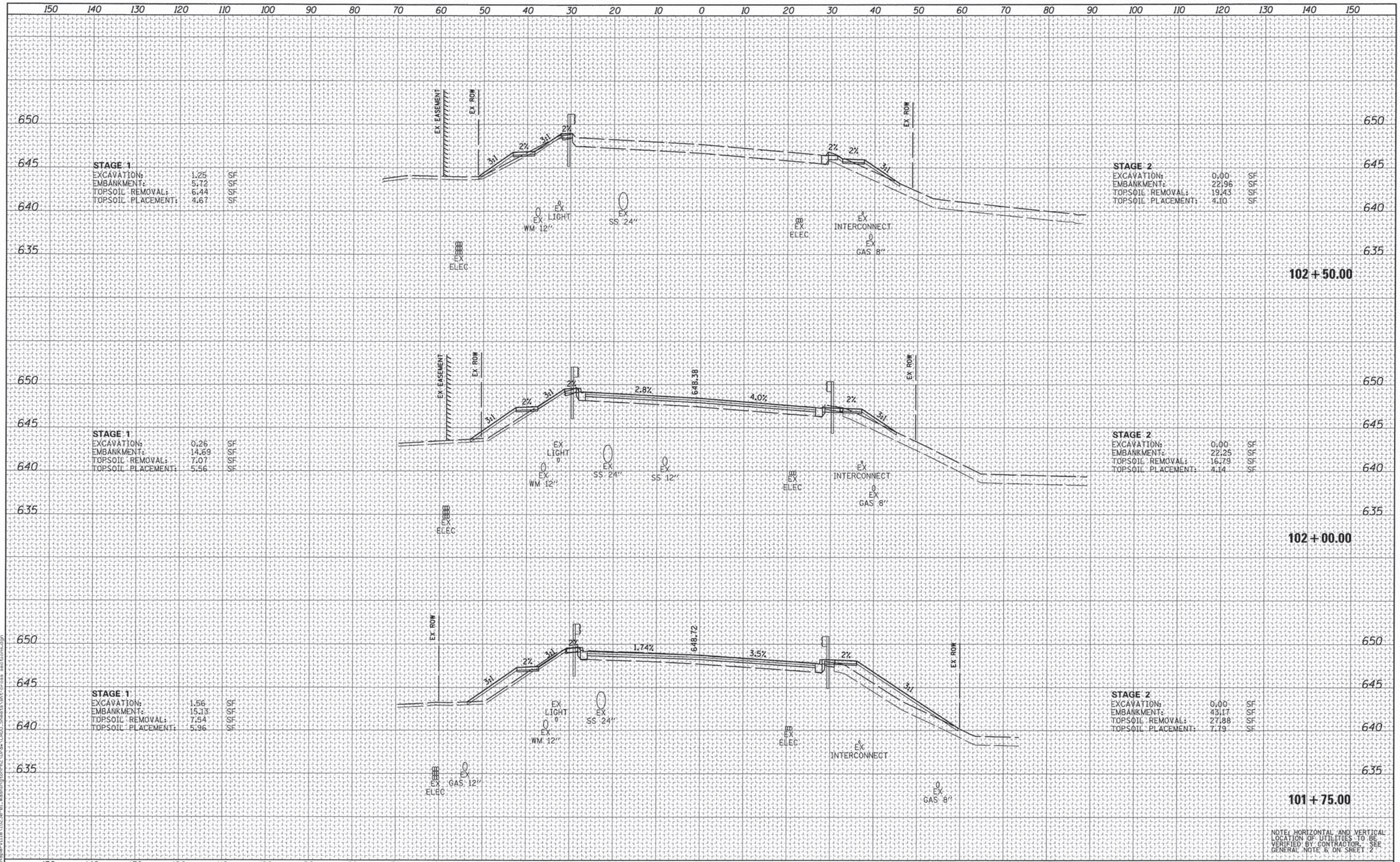

NOTE: HORIZONTAL AND VERTICAL LOCATION OF UTILITIES TO BE VERIFIED BY CONTRACTOR. SEE GENERAL NOTE 6 ON SHEET 2

FINAL SURVEY	BY	DATE
SURVEYED		
PLOTTED		
TEMPLATE		
AREAS		
AREAS CHECKED		
NOTE BOOK		
NO.		

ORIGINAL SURVEY	BY	DATE
SURVEYED		
PLOTTED		
TEMPLATE		
AREAS		
AREAS CHECKED		
NOTE BOOK		
NO.		

FILE NAME = L:\Naperville\15238-01_Washington Ph2\Draw\CADD_Sheets\sht-cross sections.dgn

CMT
License No. 184-000613 © Copyright CMT, Inc.

USER NAME = Peter Ross	DESIGNED - PFR	REVISED -	
	DRAWN - PFR	REVISED -	
PLOT SCALE = 10.0005 ' / in.	CHECKED - PFR	REVISED -	
PLOT DATE = 1/12/2016 1:59:04 PM	DATE - 12/7/2015	REVISED -	

STATE OF ILLINOIS
DEPARTMENT OF TRANSPORTATION

CROSS SECTIONS
WASHINGTON STREET

SCALE: 1"=10'/5' | SHEET 9 OF 11 SHEETS | STA. 101+75.00 TO STA. 102+50.00

F.A.U. RTE.	SECTION	COUNTY	TOTAL SHEETS	SHEET NO.
2552	14-00161-00-BR	WILL	86	84

CONTRACT NO. 61C38

ILLINOIS FED. AID PROJECT DPC-M-4003(356)

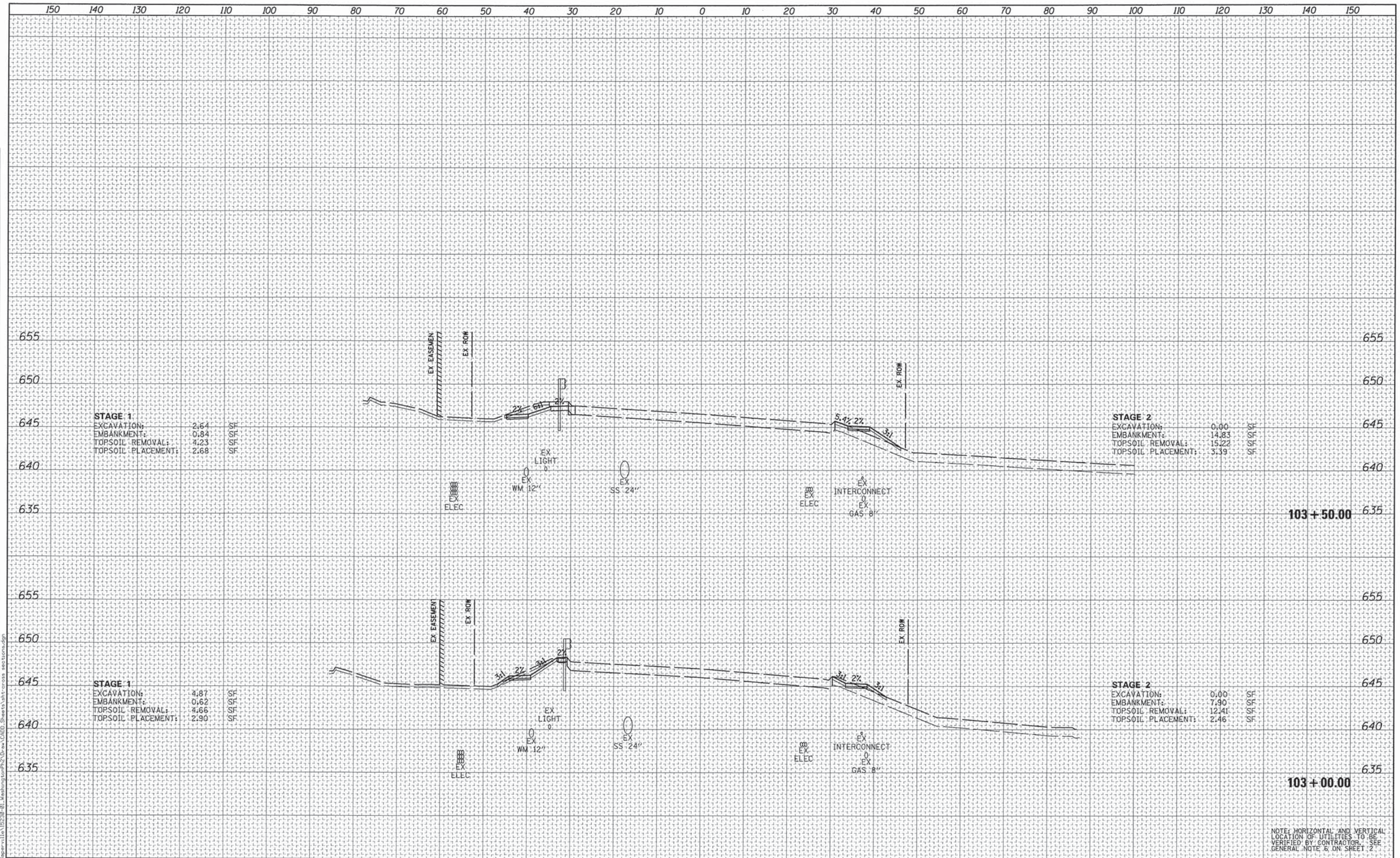

NOTE: HORIZONTAL AND VERTICAL LOCATION OF UTILITIES TO BE VERIFIED BY CONTRACTOR. - SEE GENERAL NOTE 6 ON SHEET 2.

FINAL SURVEY	BY	DATE
SURVEYED		
PLOTTED		
TEMPLATE		
AREAS		
AREAS CHECKED		
NOTE BOOK		
NO.		

ORIGINAL SURVEY	BY	DATE
SURVEYED		
PLOTTED		
TEMPLATE		
AREAS		
AREAS CHECKED		
NOTE BOOK		
NO.		

FILE NAME = L:\Naperville\15238-01_Washington\Ph2\Draw\CADD_Sheets\sht-cross sections.dgn

CMT
License No. 184-000613 © Copyright CMT, Inc.

USER NAME = Peter Ross	DESIGNED - PFR	REVISED -	
	DRAWN - PFR	REVISED -	
PLOT SCALE = 10.0005 ' / in.	CHECKED - PFR	REVISED -	
PLOT DATE = 1/12/2016 1:59:05 PM	DATE - 12/7/2015	REVISED -	

STATE OF ILLINOIS
DEPARTMENT OF TRANSPORTATION

CROSS SECTIONS
WASHINGTON STREET

SCALE: 1"=10'/5' | SHEET 10 OF 11 SHEETS | STA. 103+00.00 TO STA. 103+50.00

F.A.U. RTE.	SECTION	COUNTY	TOTAL SHEETS	SHEET NO.
2552	14-00161-00-BR	WILL	86	85

CONTRACT NO. 61C38

ILLINOIS FED. AID PROJECT DPC-M-4003(356)

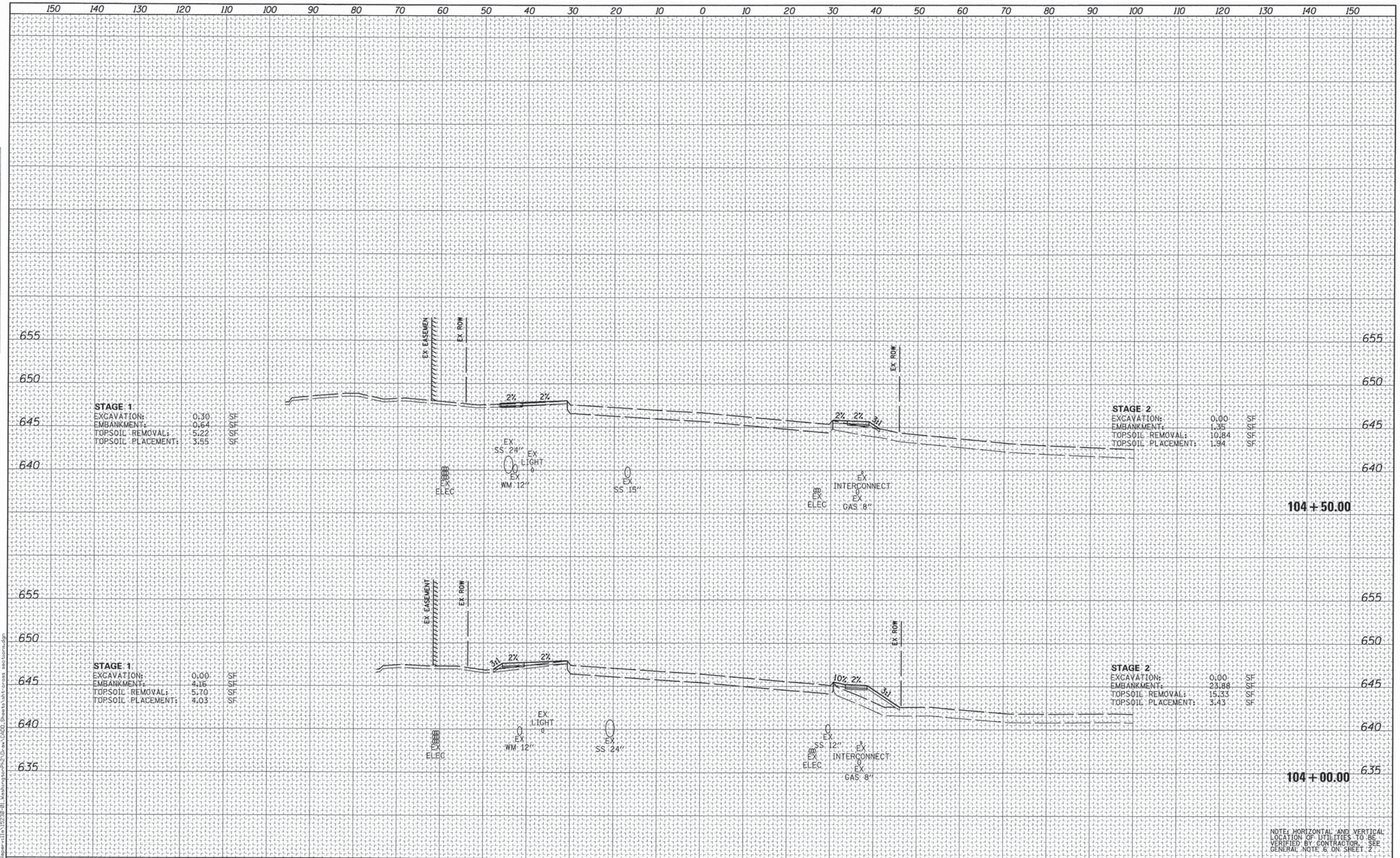

NOTE: HORIZONTAL AND VERTICAL LOCATION OF UTILITIES TO BE VERIFIED BY CONTRACTOR. SEE GENERAL NOTE 6 ON SHEET 2

FINAL SURVEY	BY	DATE
SURVEYED		
PLOTTED		
TEMPLATE		
AREAS		
AREAS CHECKED		
NOTE BOOK		
NO.		

ORIGINAL SURVEY	BY	DATE
SURVEYED		
PLOTTED		
TEMPLATE		
AREAS		
AREAS CHECKED		
NOTE BOOK		
NO.		

FILE NAME = L:\Naperville\15238-01_Washington\Ph2\Dwg\CADD_Sheets\sht-cross sections.dgn

CMT
License No. 184-000613 ©Copyright CMT, Inc.

USER NAME = Peter Ross	DESIGNED - PFR	REVISED -	
	DRAWN - PFR	REVISED -	
PLOT SCALE = 10.0005 ' / in.	CHECKED - PFR	REVISED -	
PLOT DATE = 1/12/2016 1:59:05 PM	DATE - 12/7/2015	REVISED -	

STATE OF ILLINOIS
DEPARTMENT OF TRANSPORTATION

CROSS SECTIONS
WASHINGTON STREET

SCALE: 1"=10'/5' | SHEET 11 OF 11 SHEETS | STA. 104+00.00 TO STA.104+50.00

F.A.U. RTE.	SECTION	COUNTY	TOTAL SHEETS	SHEET NO.
2552	14-00161-00-BR	WILL	86	86

CONTRACT NO. 61C38

ILLINOIS FED. AID PROJECT DPC-M-4003(356)