CONSTRUCTION NOTES:

1. REPLACE EXISTING CONTROLLER AND MALFUNCTION MANAGEMENT UNIT.
2. ALL EXISTING CONFIRMATION BEACONS SHALL BE RETROFITTED WITH L.E.D. INDICATIONS. THIS WORK SHALL BE INCLUDED IN THE COST FOR THE PAY ITEM: UNINTERRUPTIBLE POWER SUPPLY.
3. REPLACE EXISTING FIBER OPTIC INTERCONNECT CENTER PANEL.
4. REPLACE EXISTING UNINTERRUPTIBLE POWER SUPPLY TO ETHERNET AND REPLACE EXISTING UNINTERRUPTIBLE POWER SUPPLY CABINET ENCLOSURE.
5. INSTALL PTZ CAMERA ON THE COMBINATION MAST ARM AND POLE IN THE NORTHWEST CORNER.
6. INSTALL NEW 50"x67" PAD FOR UNINTERRUPTIBLE POWER SUPPLY.

SCHEDULE OF QUANTITIES

ITEM	UNIT	TOTAL
PORTLAND CEMENT CONCRETE SIDEWALK 5 INCH	SQ FT	24
MAINTENANCE OF EXISTING TRAFFIC SIGNAL INSTALLATION	EACH	1
FULL-ACTUATED CONTROLLER IN EXISTING CABINET, SPECIAL	EACH	1
REMOVE EXISTING TRAFFIC SIGNAL EQUIPMENT	EACH	1
UNINTERRUPTIBLE POWER SUPPLY	EACH	1
TERMINATE FIBER IN CABINET	EACH	6
FIBER OPTIC INTERCONNECT CENTER	EACH	1
OUTDOOR RATED NETWORK CABLE	FOOT	171
UPS BATTERY BACK-UP CABINET	EACH	1
VIDEO TRAFFIC MONITORING SYSTEM WITH PTZ CAMERA	EACH	1
MALFUNCTION MANAGEMENT UNIT	EACH	1
ETHERNET MANAGED SWITCH, TYPE 1	EACH	1

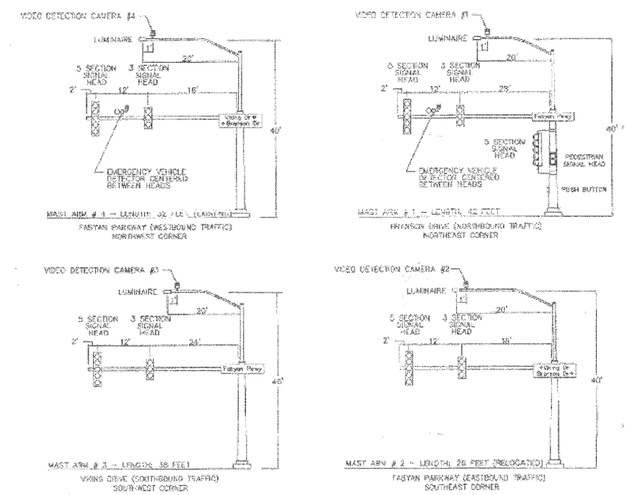

MAST ARM EQUIPMENT MOUNTING DETAIL

No Scale

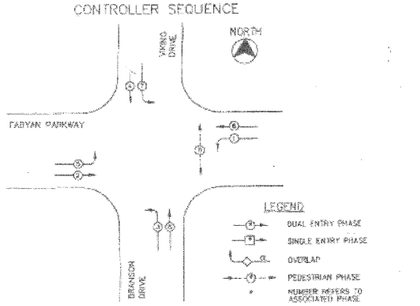

PHASE DESIGNATION DIAGRAM

(NOT TO SCALE)

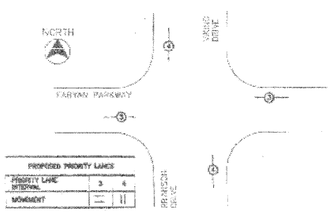

EMERGENCY VEHICLE PREEMPTION SEQUENCE

(NOT TO SCALE)

ILLINOIS DEPARTMENT OF TRANSPORTATION
TRAFFIC SIGNAL INSTALLATION
ELECTRICAL SERVICE REQUIREMENTS

TYPE	NO. OF LAMPS	X WATTAGE INCAND.	WATTAGE L.E.D.	X % OPERATION	TOTAL WATTAGE
CONTROLLER	1	100	–	1.00	100
SIGNAL (RED)	12	135	17	0.50	102
SIGNAL (YELLOW)	12	135	25	0.05	15
SIGNAL (GREEN)	12	135	15	0.45	81
SIGNAL (YELLOW ARROW)	8	135	12	0.05	5
SIGNAL (GREEN ARROW)	8	135	12	0.10	10
SIGNAL (DONT WALK)	2	135	12	0.95	23
SIGNAL (WALK)	2	135	12	0.05	2
LUMINAIRE	4	310	–	0.50	620
CAMERA	4	15	–	1.00	60
CONF. BEACON	4	120	–	0.05	24
EMERG. VEH. DETECTOR	4	20	–	1.00	80
VIDEO SYSTEM	1	135	–	1.00	135
				TOTAL =	1257

ENERGY COSTS TO:
COMPANY: CITY OF GENEVA
ADDRESS:
PHONE:
CONTACT:

ENERGY SUPPLY:
CONTACT: JENNIFER HILKEMAN
PHONE: 630-232-1503
COMPANY: GENEVA ELECTRIC DEPARTMENT

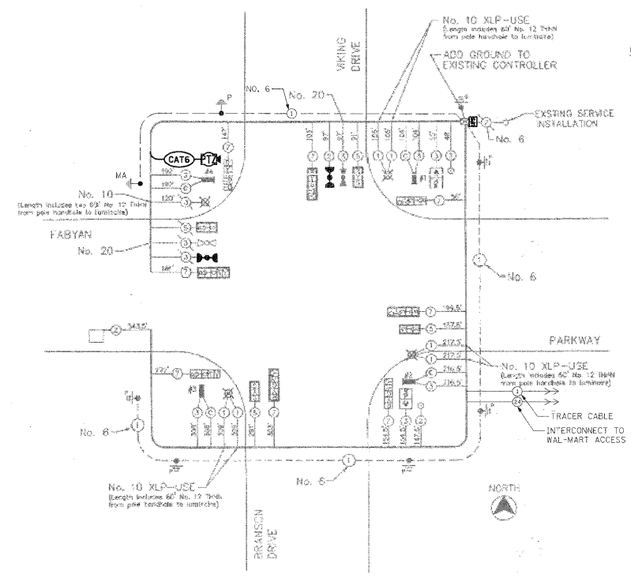

THE POSTED SPEED LIMIT ON:
FABYAN PARKWAY IS 45 MPH
VIKING DRIVE/BRANSON DRIVE IS 30 MPH

CONTROLLER SPECIFIED:

EXISTING EAGLE EPAC 300 AND TYPE IV CABINET

ALL CABLE NO. 14 EXCEPT AS INDICATED

ALL LOOP CABLE NO. 14 TWISTED, SHIELDED

CONTROLLER AND ALL FOUNDATION GROUND RODS SHALL BE CONNECTED WITH A COMMON 1/C NO. 6 GREEN INSULATED WIRE

CABLE PLAN LEGEND

EXISTING	PROPOSED	
		8" (200MM) TRAFFIC SIGNAL SECTION
		12" (200MM) TRAFFIC SIGNAL SECTION
		12" (300MM) PEDESTRIAN SIGNAL SECTION
		12" (300MM) PEDESTRIAN SIGNAL SECTION
		CONTROLLER CABINET
		SERVICE INSTALLATION
		VEHICLE DETECTION, INDUCTION LOOP
		MAGNETIC DETECTOR
		EMERGENCY VEHICLE LIGHT DETECTOR
		CONFIRMATION BEACON
		PREEMPTION DETECTOR
		DENOTES MEMBER OF CONDUITGROUP. ALL CONDUITS TO BE PROVIDED AS INDICATED. ALL LOOP DETECTOR CABLE TO BE SHIELDED.
		SIGNAL FACE WITH BACKPLATE. "P" INDICATES PROGRAMMED HEAD.
		DENOTES NUMBER OF FIBERS. FIBER OPTIC CABLE NO. 62.5/125
		GROUND ROD: H – FOR HANDHOLE OR DOUBLE HANDHOLE C – FOR CONTROLLER F – FOR POST OR MAST ARM FOUNDATION S – FOR SERVICE INSTALLATION
		VIDEO DETECTION CAMERA, WITH NUMBER
		HIGH PRESSURE SODIUM LUMINAIRE (310 WATTS WITH PHOTOCELL CONTROL)
		VIDEO COMMUNICATION CABLE, 3 PAIR NO 18 SWEEP WITH OVERALL SHIELD (NOT INDIVIDUALLY SHIELDED PAIRS)
		VIDEO WIRE CABLE BELDEN 8281 RG-59U COAXIAL CABLE

CABLE PLAN

No Scale

Aug 26, 2003 – 09:00 Dwg Name: n:\pcadproj\proj\rcl Drawings\traffic signals\IS-converter.dwg Hosted for: armstrong

MANHARD CONSULTING LTD.
ENGINEERS • SURVEYORS • ENVIRONMENTAL SCIENTISTS
400 Woodlands Parkway Vernon Hills, Illinois 60061
tel: 847/634-5550 fax: 847/634-5555 http://www.MANHARD.com

FABYAN PARKWAY IMPROVEMENTS-COMMERCIAL ACCESS
CITY OF BATAVIA, ILLINOIS
PHASING AND CABLE PLAN

PROJ MGR. SLW
PROJ ENG. DNC
DRAWN BY. PEH
CHECKED BY. SLW
DATE 07/31/03
SCALE NTS

SHEET 5 OF 10

CACBAH 3478

CHRISTOPHER B. BURKE ENGINEERING LTD.
9575 West Higgins Road, Suite 600
Rosemont, Illinois 60018
(847) 823-0500

FILE NAME =	USER NAME = FPACIONE	DESIGNED - ABR	REVISED -
N:\kanecounty\080673\Traffic\041_CAB_Fabyan Pkwy-Viking.dgn		DRAWN - FCP / FPB	REVISED -
	PLOT SCALE = NOT TO SCALE	CHECKED - MJT	REVISED -
	PLOT DATE = 11/3/2010	DATE - AUGUST 31, 2010	REVISED -

STATE OF ILLINOIS
DEPARTMENT OF TRANSPORTATION

SCHEDULE OF QUANTITIES, CABLE PLAN, PHASE DESIGNATION DIAGRAM AND EMERGENCY VEHICLE PREEMPTION SEQUENCE
FABYAN PARKWAY AND VIKING /BRANSON

SCALE: | SHEET NO. OF SHEETS | STA. -- TO STA. --

F.A.P. RTE.	SECTION	COUNTY	TOTAL SHEETS	SHEET NO.
336	09-00237-02-TL	KANE	100	41
		CONTRACT NO. 63525		

ILLINOIS FED. AID PROJECT