F.A.U RTE.	SECTION	COUNTY	TOTAL SHEETS	SHEET NO.
6108	(70X)N & TS-1	LASALLE	460	335
STA.	TO STA.			
FED. ROAD DIST. NO.	ILLINOIS	FED. AID PROJECT		

CONTRACT NO. 86603

DESIGN		
INT.	DATE	REASON

PLOTS & CHECKS		
INT.	DATE	NO. REASON

CHECKS		
INT.	DATE	REASON

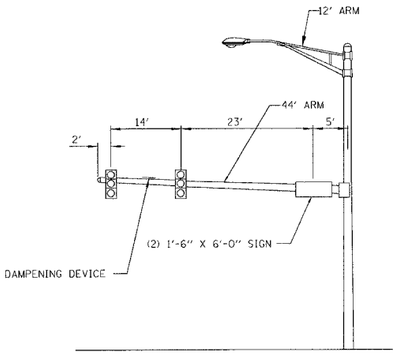

MAST ARM LOADING DIAGRAM
NORTHEAST QUADRANT
NORTHBOUND VIEW

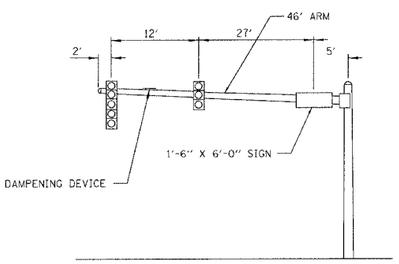

MAST ARM LOADING DIAGRAM
NORTHWEST QUADRANT
WESTBOUND VIEW

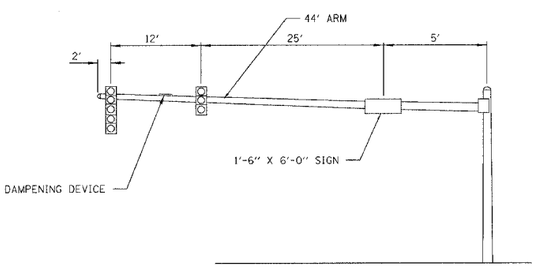

MAST ARM LOADING DIAGRAM
SOUTHEAST QUADRANT
EASTBOUND VIEW

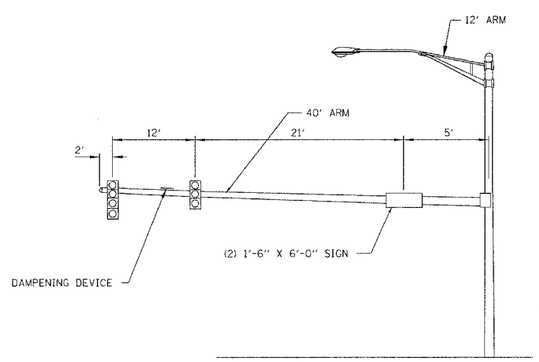

MAST ARM LOADING DIAGRAM
SOUTHWEST QUADRANT
SOUTHBOUND VIEW

TRAFFIC SIGNAL GENERAL NOTES

1. THE CONTRACTOR SHALL VERIFY THE EXACT LOCATION OF ALL UNDERGROUND UTILITIES PRIOR TO BEGINNING CONSTRUCTION. CALL J.U.L.I.E. AT 800-892-0123

2. THE TRAFFIC SIGNAL SECTION AT THE ILLINOIS DEPARTMENT OF TRANSPORTATION SHALL BE NOTIFIED AT 815-434-8506 AT LEAST 72 HOURS PRIOR TO TURNING ON ANY FLASHER OR CONTROLLER UNITS.

3. THE CONTRACTOR SHALL BE RESPONSIBLE FOR THE MAINTENANCE OF THE TRAFFIC SIGNAL INSTALLATION FOR THE DURATION OF THE SIGNAL WORK, FOR THIRTY (30) DAYS FOLLOWING THE FINAL INSPECTION, AND AS DESCRIBED IN SECTION 801.19 OF THE STANDARD SPECIFICATIONS FOR ROAD AND BRIDGE CONSTRUCTION.

4. ALL TRAFFIC SIGNAL HEADS SHALL BE 12" POLYCARBONATE.

5. ALL PEDESTRIAN SIGNALS MUST CONSIST OF TWO SIGNAL SECTIONS WITH THE SYMBOLS FOR DON'T WALK AND WALK

6. TRAFFIC SIGNAL HEADS SHALL BE PROPERLY COVERED PRIOR TO INTERSECTION TURN-ON OR AS DIRECTED BY THE ENGINEER. THIS COST SHALL BE INCLUDED WITH THE COST OF THE ASSOCIATED SIGNAL PAY ITEMS.

7. A 1/4" DIAMETER CONTINUOUS RODENT RESISTANT NYLON ROPE SHALL BE FURNISHED AND LEFT IN PLACE IN ALL CONDUITS BETWEEN HANDHOLES AND FOUNDATIONS OR CONTROLLER. THIS COST SHALL BE INCLUDED WITH THE COST OF CONDUIT PAY ITEM.

8. THE CONTRACTOR SHALL ARRANGE FOR A FACTORY OR SUPPLIER REPRESENTATIVE TO BE PRESENT AT THE INTERSECTION WHEN THE SIGNAL IS TURNED ON. COST TO BE INCLUDED WITH THE TRAFFIC SIGNAL CONTROLLER PAY ITEM.

9. NO ADDITIONAL COMPENSATION WILL BE ALLOWED FOR PLACING CONDUIT GREATER THAN 24" MINIMUM DEPTH TO AVOID OBSTACLES SUCH AS UNDERGROUND UTILITIES.

10. ALL MAST ARM MOUNTED SIGNAL HEADS ON AN INDIVIDUAL MAST ARM SHALL BE MOUNTED SO THAT THE RED INDICATIONS ARE LEVEL WITH EACH OTHER.

11. THE ELECTRICAL CONDUCTORS FOR ALL TRAFFIC SIGNAL HEADS SHALL BE SOLID, SOFT COPPER.

12. ALL THREADS OF BOLTS USED IN ASSEMBLY OF TRAFFIC SIGNAL COMPONENTS SHALL BE COATED WITH A NON-LEAD BASED ANTI-SEIZE COMPOUND, SIMILAR TO LEAD PLATE, PRIOR TO ASSEMBLY.

13. ALL AREAS DISTURBED BY THE CONTRACTOR SHALL BE RESTORED WITH SOD TO THE SATISFACTION OF THE ENGINEER.

14. ALL SIDEWALK AND PAVEMENT TO BE REMOVED OR REMOVED AND REPLACED SHALL BE FULL-DEPTH SAW CUT PRIOR TO REMOVAL. SIDEWALK SHALL BE REMOVED IN FULL PANELS ONLY.

15. ALL HARDWARE SHALL BE TIGHTENED AND WELL SECURED. CABLES SHALL BE NEATLY WOUND IN HANDHOLES, CABLES SHALL BE NEATLY TRAINED IN THE CONTROLLER CABINET.

16. ALL SIGNAL BASES SHALL BE LOCATED A MINIMUM OF 5' FROM THE FACE OF CURB UNLESS OTHERWISE DIRECTED BY THE ENGINEER.

17. DETECTOR LOOPS SHALL BE INSTALLED IN THE MILLED SURFACE BEFORE THE SURFACE COURSE IS PLACED.

18. ALL NEW TRAFFIC AND PEDESTRIAN SIGNAL WIRING SHALL EXTEND FROM CONTROLLER TO SIGNAL. SPLICES IN JUNCTION BOXES WILL NOT BE ALLOWED.

19. LOOPS IN SAME LANE SHALL BE WOUND CLOCKWISE & COUNTERCLOCKWISE IN ALTERNATING ORDER. LOOPS IN ADJACENT LANES SHALL BE WOUND ALL THE SAME.

20. THE PROPOSED TRAFFIC SIGNAL CONTROLLER CABINET SHALL BE FURNISHED WITH A MANUAL CONTROL SWITCH AND MANUAL CONTROL CORD WITHIN THE POLICE DOOR COMPARTMENT AS INCIDENTAL TO THE CONTROLLER CABINET PAY ITEM.

21. THE CONTRACTOR SHALL BE RESPONSIBLE FOR OBTAINING ELECTRICAL SERVICE FOR THE TRAFFIC SIGNAL. THE CONTRACTOR SHALL CONTACT THE UTILITY COMPANY PRIOR TO BEGINNING WORK TO OBTAIN THE UTILITY COMPANY REQUIREMENTS FOR THE SERVICE INSTALLATION.

22. ALL DETECTOR AMPLIFIERS SHALL BE LABELED WITH RESPECTIVE PHASES AND DIRECTION AS LISTED IN THE DETECTOR LOOP CHART. TAGS SHALL BE MADE OF A MATERIAL THAT DOES NOT ALLOW WRITING TO FADE OVER TIME.

23. THE LENGTH OF DETECTOR LOOP CABLE FROM THE CURB TO THE JUNCTION BOX OR HANDHOLE IS INCIDENTAL TO THE DETECTOR LOOP PAY ITEM.

24. THE CONTROLLER CABINET SHALL BE PLACED SO THAT A TECHNICIAN CAN SEE THE INTERSECTION OVER THE TOP OF THE CABINET WHILE WATCHING THE COMPONENTS IN THE CABINET.

25. BACKPLATES SHALL BE LOUVERED POLYCARBONATE WITH DEEP BACK FLANGE.

26. ALL TRAFFIC AND PEDESTRIAN SIGNAL HEADS FURNISHED AND INSTALLED ON THIS PROJECT SHALL HAVE LIGHT-EMITTING DIODE (LED) TECHNOLOGY FACES.

27. ALL (LED) ARROW TRAFFIC SIGNAL SECTIONS SHALL HAVE 3 ROWS OF (LED's) IN LIEU OF 2 ROWS.

28. A SELF-ADHERED PHASE DIAGRAM SHALL BE INSTALLED ON THE INSIDE OF THE CABINET DOOR.

29. TRAFFIC SIGNALS SHALL NOT BE TURNED ON UNTIL ALL PAVEMENT IS CONSTRUCTED UNLESS DIRECTED BY THE ENGINEER.

30. A SELF-ADHERING PHASE DIAGRAM SHALL BE INSTALLED ON THE INSIDE OF THE CABINET DOOR.

NOTE: DAMPENING DEVICE SHALL CONSIST OF A 24" X 30" TYPE 1, UNPAINTED ALUMINUM SIGN STOCK MOUNTED HORIZONTALLY ON TOP OF MAST ARM WITH THE 30" LENGTH PERPENDICULAR TO THE ARM. COST OF THE DAMPENING DEVICE IS INCLUDED IN THE MAST ARM PAY ITEM

R10-5
24" X 30"
4 SIGNS REQUIRED-5 SQ. FT. EACH
TYPE A SHEETING REQUIRED

THIS SIGN SHALL BE LOCATED 6" TO 12" TO THE RIGHT OF EACH 4 SECTION MAST ARM MOUNTED LEFT TURN SIGNAL. A SECOND SIGN SHALL BE LOCATED DIRECTLY BELOW AND PARALLEL TO THE BACKPLATE OF EACH POST BRACKETED 4 SECTION LEFT TURN ARROW SIGNAL.

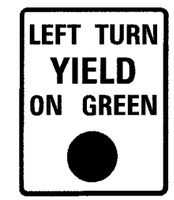

R10-12
24" X 30"
2 SIGNS REQUIRED-5 SQ. FT. EACH
TYPE A SHEETING REQUIRED

THIS SIGN SHALL BE LOCATED 6" TO 12" TO THE RIGHT OF EACH 5 SECTION MAST ARM MOUNTED LEFT TURN SIGNAL

THESE STREET NAME SIGNS SHALL BE PLACED ON THE MAST ARMS PARALLEL TO THE RESPECTIVE ROUTE AS DIRECTED BY THE ENGINEER.

TWO OF EACH SIGN PANEL TYPE 2 REQUIRED.

STREET NAME SIGNS

1. TYPE A SHEETING
2. WHITE/GREEN BACKGROUND
3. 3/4" WHITE BORDER
4. LETTERS 8"/4"

STREET NAME SIGNS

REVISIONS	
NAME	DATE
W.C.D.	9/25/03
W.C.D.	3/2/04

ILLINOIS DEPARTMENT OF TRANSPORTATION

TRAFFIC SIGNAL DETAILS

FAU 6108 (IL. RTE. 351)
SECTION (70X)N & TS-1
LASALLE COUNTY

SCALE: VERT.
HORIZ.
DATE: 6/4/03

DRAWN BY: C.S.
DESIGNED BY: W.C.D.
CHECKED BY: W.C.D.

CBB Crawford, Bunte, Brammeier Traffic and Transportation Engineers
St. Louis, Missouri/Glen Carbon, Illinois
314-878-6644 618-656-2962
Fax: 314-878-5876 E-Mail: cbb@cbbtraffic.com

COMPUTER FILE NO. TSDETS

PROJECT 01194_B_N
4/16/04 - MDS

IDOTPL-1 1"=1' 8/07/00