CONTRACT NO. 66528

F.A.P. RTE.	SECTION	COUNTY	TOTAL SHEETS	SHEET NO.
649	*	LIVINGSTON	15	15
STA.		TO STA.		
FED. ROAD DIST. NO.	ILLINOIS	FED. AID PROJECT		

*(16)RS-4,(17,28)RS-2

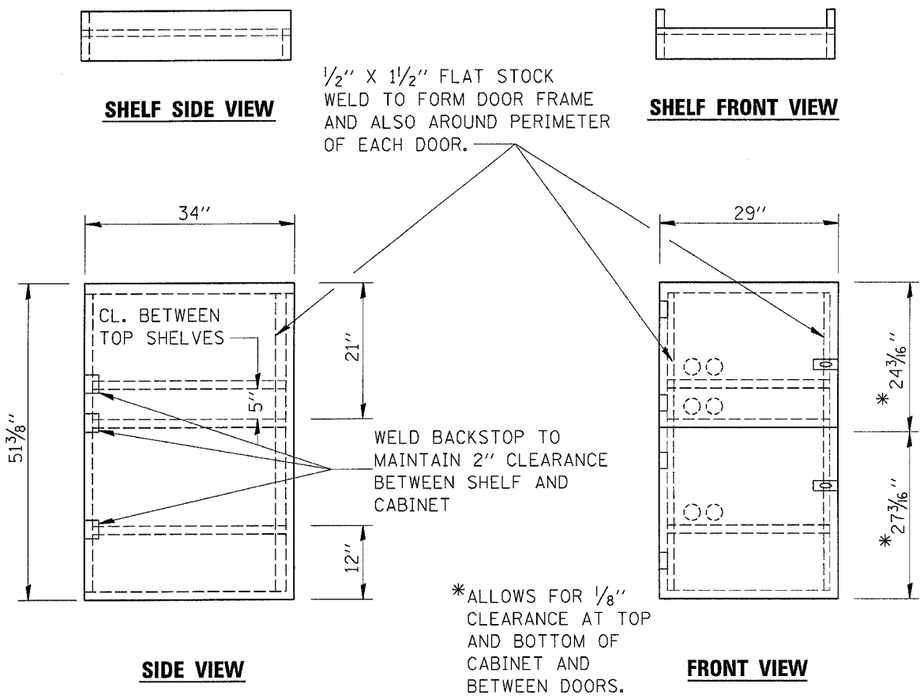

AERIAL SPEED CHECK ZONES

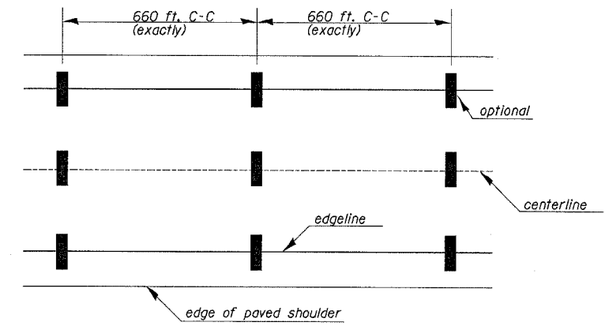

It will be necessary to have a representative of the State Police present so that the accuracy of measurement can be attested to in court

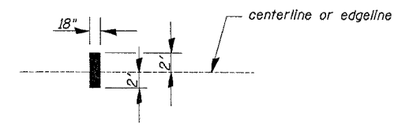

NOTES:

1. USE 16 GAUGE STEEL FOR CABINET.
2. THE TOP SHELF SHALL SLIDE IN OR OUT WITH THE TOP DOOR OPEN.
3. ALL HINGES AND HASPS WILL BE WELDED TO THE CABINET.
4. ALL EDGES SHALL BE GROUND SMOOTH.
5. TWO (2" DIA.) ACCESS HOLES WILL BE REQUIRED FOR EACH SHELF.
6. CABINET SHALL BE PAINTED WITH TWO COATS OF FLAT PAINT.
7. 2 EACH MATCHING KEY PADLOCKS, WITH 3 KEYS PROVIDED, MASTER MODEL 3 T OR EQUIVALENT.
8. 4 EACH PLAIN STEEL, NON-REMOVABLE PIN, NO HOLE 4"X4" SQUARE CORNER HINGES TO BE WELDED ON.
9. 2 EACH EXTRA HEAVY, PLAIN STEEL, FIXED STAPLE, NO HOLE, 7 1/4 " HASPS TO BE WELDED ON.

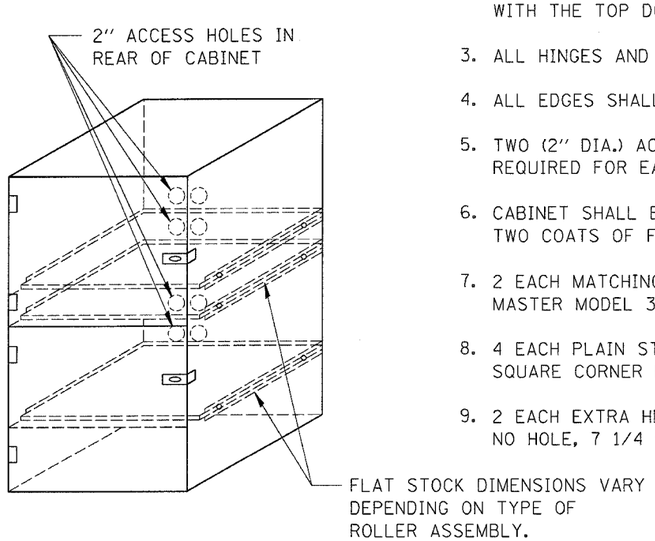

LOCKABLE COMPUTER CABINET

REVISIONS NAME	DATE

ILLINOIS DEPARTMENT OF TRANSPORTATION

DETAILS

SCALE: VERT. HORIZ.

DATE

DRAWN BY

CHECKED BY

PLOT DATE = 11/3/2004
FILE NAME = $FILE$
PLOT SCALE = $SCALE$
REFERENCE = REF