STATE OF ILLINOIS
DEPARTMENT OF TRANSPORTATION

F.A.I. RTE.	SECTION	COUNTY	TOTAL SHEETS	SHEET NO.
90/94	2021-922PT.1-AC	COOK	460	341
STA.		TO STA.		
FED. ROAD DIST. NO. 1	ILLINOIS	FED. AID PROJECT		

62693

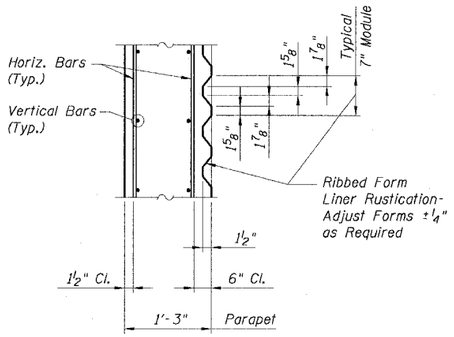

SECTION G-G

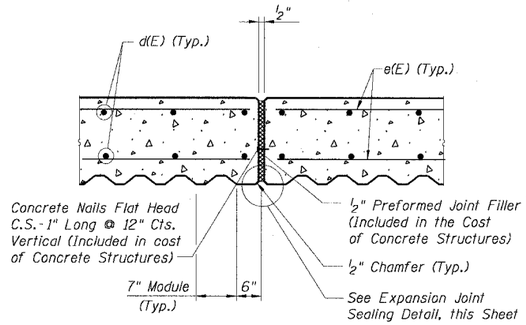

EXPANSION JOINT DETAIL
(in Parapet)

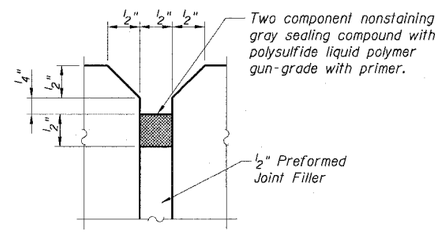

EXPANSION JOINT SEALING DETAIL

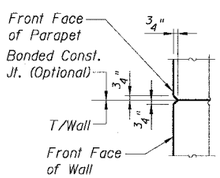

DETAIL A

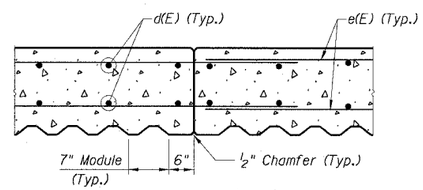

CONSTRUCTION JOINT DETAIL
(in Parapet)

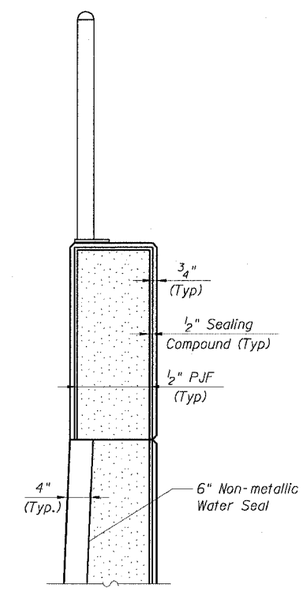

EXPANSION JOINT

BILL OF MATERIAL

Bar	No.	Size	Length	Shape
d1(E)	41	#5	4'-3"	
d2(E)	42	#7	5'-8"	
e1(E)	7	#4	19'-8"	
e2(E)	7	#4	20'-7"	
e3(E)	14	#4	21'-10"	

Item	Unit	Quantity
Concrete Removal	Cu Yd	3.2
Concrete Superstructure	Cu Yd	8.5
Protective Coat	Sq Yd	39
Reinforcement Bars, Epoxy Coated	Pound	1070
Chain Link Fence, 42" Attached to Structure (Special)	Foot	41
Rustication Finish	Sq Ft	74
Porous Granular Embankment	Cu Yd	5
Structure Excavation	Cu Yd	6

NOTES:

1. Work Sheets CGc1 thru CGc3 together.

CGc3 OF 3

REVISIONS	
NAME	DATE

ILLINOIS DEPARTMENT OF TRANSPORTATION
F.A.I. 90/94 (DAN RYAN EXPRESSWAY)
SECTIONS, DETAILS & BILL OF MATERIAL
SOUTHEAST CORNER GARDEN
SOUTH WENTWORTH AVE. AT WEST 63rd STREET
SECTION 2021-922 PT.1-AC
STATION 103+65.74 TO 104+00.81
COOK COUNTY

SCALE: None DRAWN BY: CHD
DATE: October 29, 2004 CHECKED BY: DC

CTE ENGINEERS
CONSOER TOWNSEND ENVIRODYNE ENGINEERS, INC.
303 EAST WACKER DRIVE, SUITE 600
CHICAGO ILLINOIS 60601-5212, PHONE: (312) 938-0300

M:\P40468\Struct\V4 Chr'90\STR\CGc-63\R17050012A_CGc3.stt
11/22/2004 01:42:59 PM