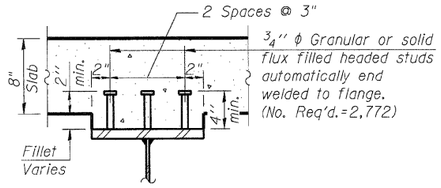

SECTION A-A

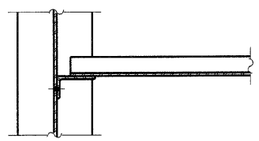

SECTION B-B

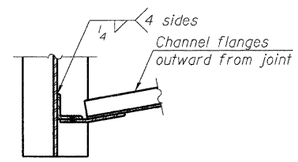

SECTION C-C

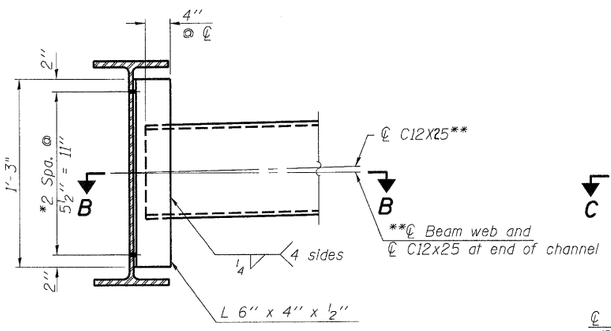

INTERIOR DIAPHRAGM (D)

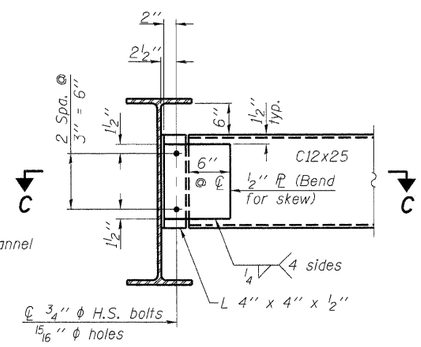

END DIAPHRAGM (D1)

Note:
Two hardened washers required for each set of oversized holes.
*3/4" ϕ HS bolts, 15/16" ϕ holes.
** Alternate channel C12x30 is permitted to facilitate material acquisition. Calculated weight of structural steel is based on C12x25 sections. The alternate, if utilized shall be provided at no extra cost to the department.

***TOP OF BEAM ELEVATIONS

Location	Beam 1	Beam 2	Beam 3	Beam 4	Beam 5	Beam 6
℄ Brg. E. Abut.	392.58	392.69	392.78	392.79	392.70	392.60
℄ Pier 1	392.54	392.65	392.73	392.74	392.64	392.54
℄ Splice	392.54	392.65	392.73	392.73	392.63	392.53
℄ Pier 2	392.50	392.60	392.67	392.67	392.57	392.46
℄ Brg. W. Abut.	392.46	392.55	392.62	392.61	392.51	392.39

*** For Fabrication only.

INTERIOR GIRDER MOMENT TABLE				
		0.4 Sp. 1 or 0.6 Sp. 3	Pier 1 or Pier 2	0.5 Sp. 2
I_s	(in^4)	2850	2850	2850
$I_c(n)$	(in^4)	8572	---	8572
$I_c(3n)$	(in^4)	6416	---	6416
S_s	(in^3)	213	213	213
$S_c(n)$	(in^3)	332	---	332
$S_c(3n)$	(in^3)	300	---	300
Z	(in^3)	---	244	---
DC1	(k/')	0.711	1.129	0.711
M_{DC1}	('k)	61.2	156.2	55.4
DC2	(k/')	0.150	---	0.150
M_{DC2}	('k)	15.3	---	17.7
DW	(k/')	0.268	---	0.268
M_{DW}	('k)	27.3	---	31.6
M_{LL+IM}	('k)	296.6	172.3	348.0
M_u (Strength I)	('k)	655.6	504.3	747.8
**** $\phi_f M_n$, $\phi_f M_{nc}$	('k)	1802	934.5	1802
f_s DC1	(ksi)	3.4	8.8	3.1
f_s DC2	(ksi)	0.6	---	0.7
f_s DW	(ksi)	1.1	---	1.3
f_s 1.3(LL+IM)	(ksi)	13.9	12.6	16.4
f_s (Service II)	(ksi)	19.0	21.4	21.5
f_s (Total)(Strength I)	(ksi)	---	---	---
***** V_f	(k)	21.4	---	21.0

**** Compact sections
***** Non-Compact and slender sections

INTERIOR GIRDER REACTION TABLE			
		Abut.	Pier
R_{DC1}	(k)	9.3	30.8
R_{DC2}	(k)	2.1	6.4
R_{DW}	(k)	3.7	11.4
R_{LL+IM}	(k)	58.4	74.2
R_{Total}	(k)	73.5	122.8

I_s, S_s: Non-composite moment of inertia and section modulus of the steel section used for computing f_s (Total-Strength I, and Service II) due to non-composite dead loads ($in.^4$ and $in.^3$).
$I_c(n)$, $S_c(n)$: Composite moment of inertia and section modulus of the steel and deck based upon the modular ratio, "n", used for computing f_s (Total-Strength I, and Service II) due to short-term composite live loads ($in.^4$ and $in.^3$).
$I_c(3n)$, $S_c(3n)$: Composite moment of inertia and section modulus of the steel and deck based upon 3 times the modular ratio, "3n", used for computing f_s (Total-Strength I, and Service II) due to long-term composite (superimposed) dead loads ($in.^4$ and $in.^3$).
Z: Plastic Section Modulus of the steel section in non-composite areas. Omit line in Moment Table if not used in design calculations ($in.^3$).
DC1: Un-factored non-composite dead load (kips/ft.).
M_{DC1}: Un-factored moment due to non-composite dead load (kip-ft.).
DC2: Un-factored long-term composite (superimposed excluding future wearing surface) dead load (kips/ft.).
M_{DC2}: Un-factored moment due to long-term composite (superimposed excluding future wearing surface) dead load (kip-ft.).
DW: Un-factored long-term composite (superimposed future wearing surface only) dead load (kips/ft.).
M_{DW}: Un-factored moment due to long-term composite (superimposed future wearing surface only) dead load (kip-ft.).
M_{LL+IM}: Un-factored live load moment plus dynamic load allowance (impact) (kip-ft.).
M_u (Strength I): Factored design moment (kip-ft.).
$1.25\ (M_{DC1} + M_{DC2}) + 1.5\ M_{DW} + 1.75\ M_{LL+IM}$
$\phi_f M_n$: Compact composite positive moment capacity computed according to Article 6.10.7.1 (kip-ft.).
$\phi_f M_{nc}$: Compact non-composite negative moment capacity computed according to Article A6.1.1 (kip-ft.).
f_s (Service II): Sum of stresses as computed from the moments below (ksi).
$M_{DC1} + M_{DC2} + M_{DW} + 1.3\ M_{LL+IM}$
f_s (Total)(Strength I): Sum of stresses as computed from the moments below on non-compact section (ksi).
$1.25\ (M_{DC1} + M_{DC2}) + 1.5\ M_{DW} + 1.75\ M_{LL+IM}$
V_f: Maximum factored shear range in composite portion of span computed according to Article 6.10.10.

Note:
All cross frames or diaphragms shall be installed as steel is erected and secured with erection pins and bolts except as otherwise noted. Individual cross frames or diaphragms at supports may be temporarily disconnected to install bearing anchor rods.

PRINTED DATE: 12/15/2011
FILE NAME = n:\projects\cdot\pib 148, tem 25 - d7 versus design\work order 08\cadd\drawings\sheets\29_W06_Struct$Steel$Det.dgn

DESIGNED	SMA
CHECKED	DF
DRAWN	ADG
CHECKED	DF

ESI CONSULTANTS, LTD
753 WINDSOR ROAD
CHARLESTON, IL 61920
(217) 345-1900
WWW.ESICONSULTANTSLTD.COM
ILLINOIS DEPARTMENT OF PROFESSIONAL REGULATION REGISTRATION #184-003685

STATE OF ILLINOIS
DEPARTMENT OF TRANSPORTATION

STRUCTURAL STEEL DETAILS
STRUCTURE NO. 096-0074
SHEET NO. 15 OF 24 SHEETS

F.A.P. RTE.	SECTION	COUNTY	TOTAL SHEETS	SHEET
823	(22,B2A)B-1 & (22,B2B)B-1	Wayne	85	29
		CONTRACT NO. 74216		
	ILLINOIS FEDERAL AID PROJECT			