STATE OF ILLINOIS
DEPARTMENT OF TRANSPORTATION

ROUTE NO.	SECTION	COUNTY	TOTAL SHEETS	SHEET NO.
F.A.P. 840	139 BR-1	KANKAKEE	69	24
FED. ROAD DIST. NO. 7		ILLINOIS	FED. AID PROJECT-	

SHEET NO. 8
13 SHEETS

Contract #66543

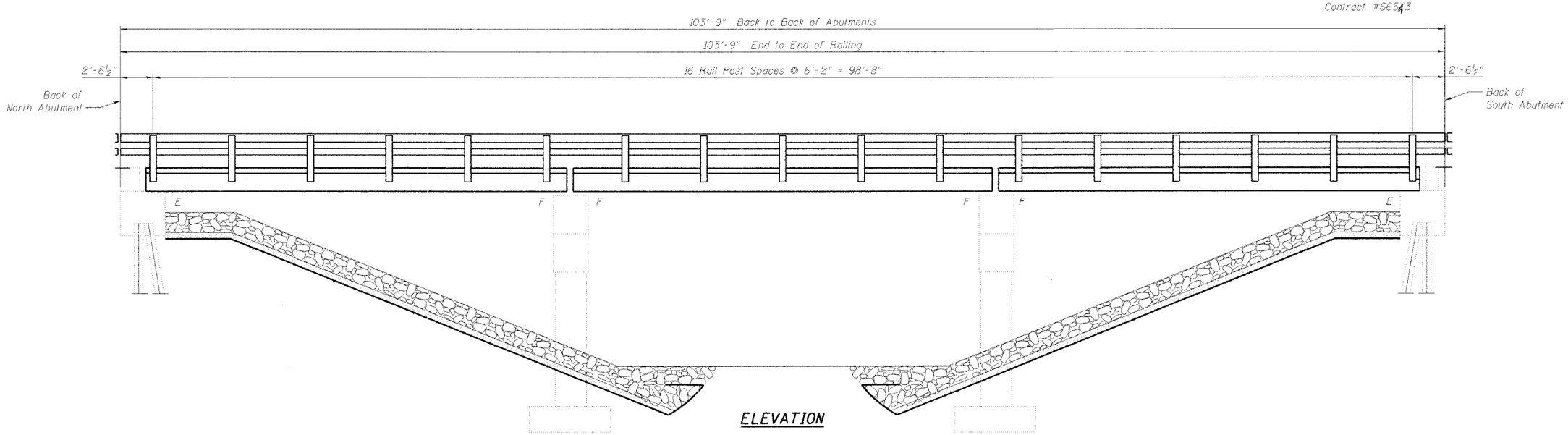

ELEVATION

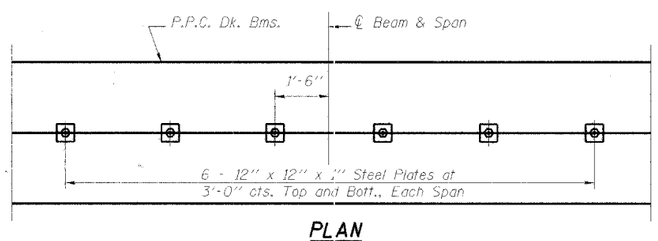

PLAN

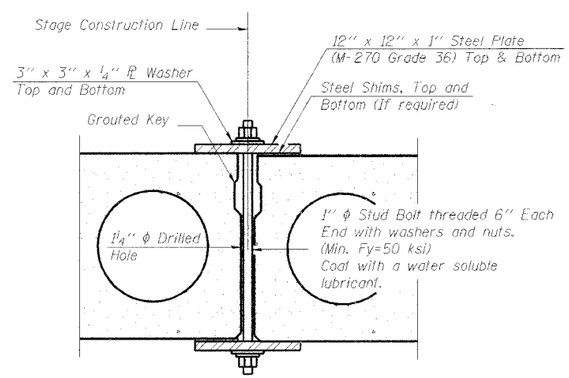

SECTION

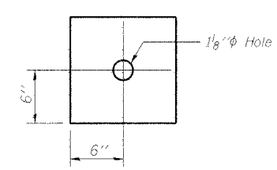

CLAMPING PLATE

SHEAR KEY CLAMPING DETAILS AT STAGE CONST. JT.

See Special Provisions for Stage Construction of Precast Prestressed Concrete Deck Beams.
Cost included with "Precast Prestressed Concrete Deck Beams".
See Stage Construction Details for traffic lanes.

Note:
Work this sheet with Sheet 7 of 13.

DESIGNED	S.D.S.
CHECKED	C.W.C.
DRAWN	L.M.G./D.L.H.
CHECKED	S.D.S.

WHKS & CO.
ENGINEERS PLANNERS LAND SURVEYORS
MASON CITY, IA EAST DUBUQUE, IL AMES, IA SPRINGFIELD, IL ROCHESTER, MN

SUPERSTRUCTURE DETAILS
US ROUTE 45/52 OVER MINNIE CREEK
F.A.P. 840 SEC. 139 BR-1
KANKAKEE COUNTY
STATION 196+30.00
STRUCTURE NO. 046-0070