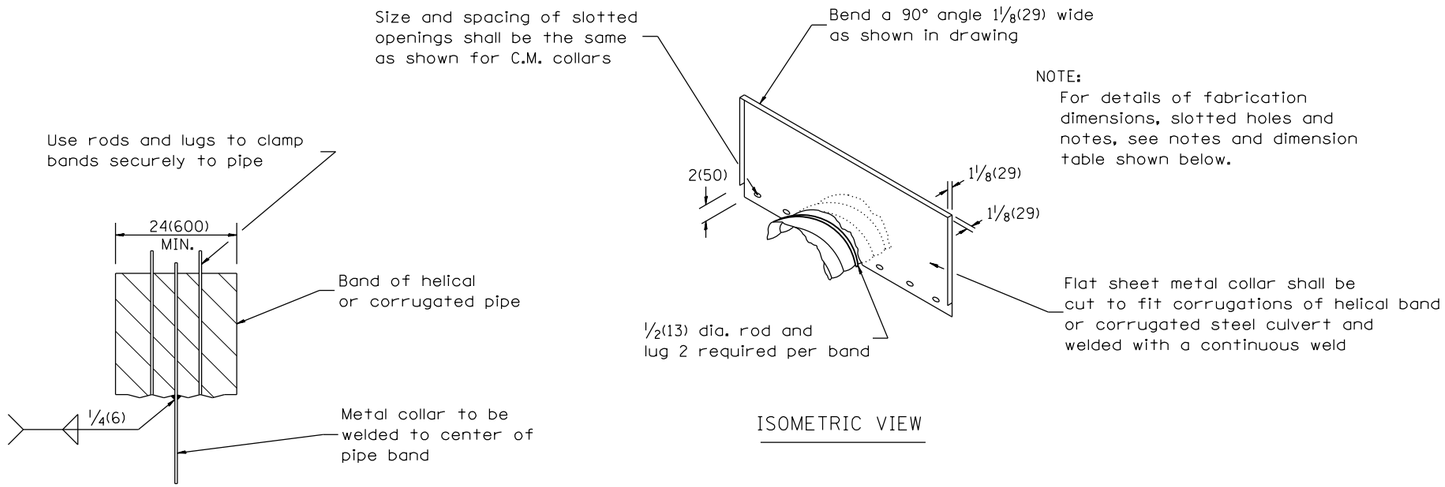

DETAILS OF CORRUGATED PIPE COLLAR

NOTES FOR COLLARS:

1. Materials and coatings for all collars shall be the same as that specified for the pipe.
2. Collars shall be shop fabricated, assembled and marked by painting to identify matching half sections of each collar.
3. The laps between the half sections and between the pipe and connecting bands shall be caulked with fiberized asphalt mastic at the time of installation.
4. All tank lugs, rods, and nuts shall be galvanized steel. Where aluminum collars are used, The rods and lugs shall be separated from the aluminum bands. By at least two (2) layers of 2(50) wide plastic tape with a total thickness of 2¼ mils or more.
5. The collars shall be welded to the connecting bands as shown on the drawings, all welds shall be treated as specified for class I, II, and III welds, miscellaneous. (Refer to AWS Standard Specifications)
6. Bands shall be fabricated from material having the same class of corrugations as the pipe to which it is to be attached.
7. Upper half of sheet may be cut shorter to provide 6(150) min. earth cover.

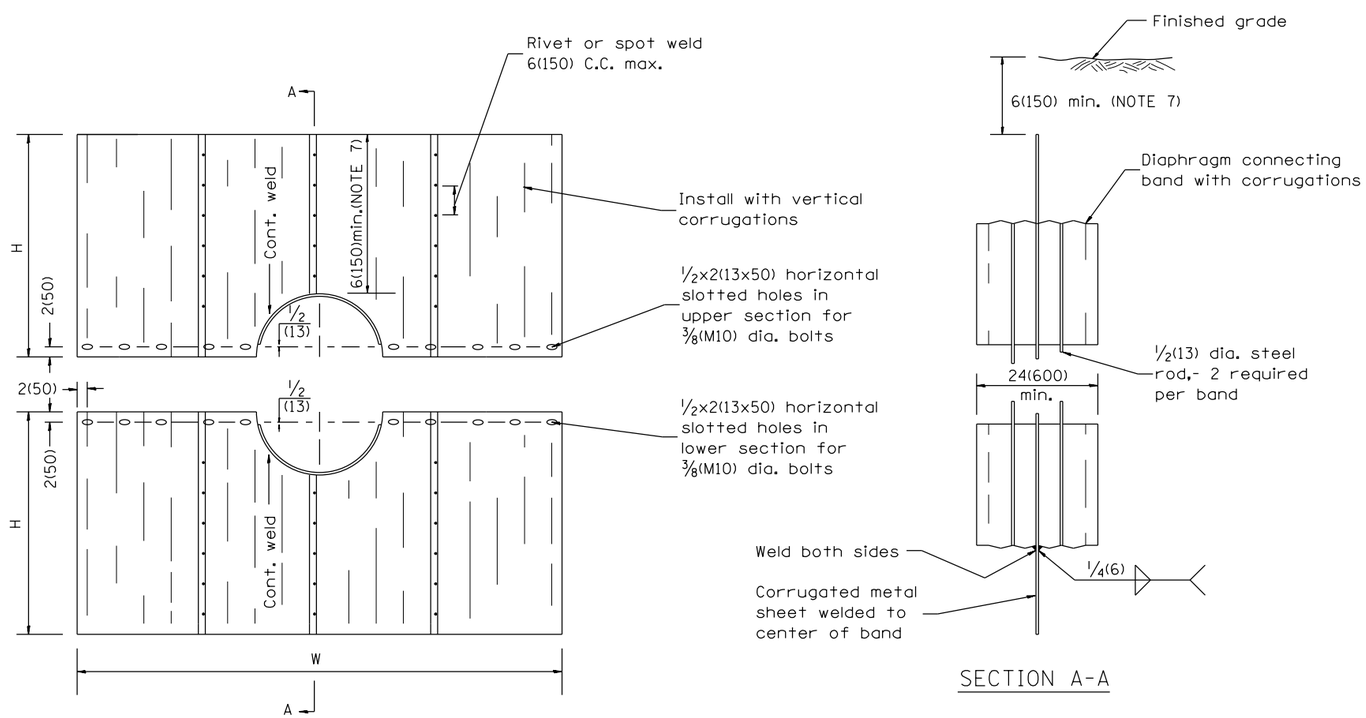

DETAILS OF SEEPAGE COLLAR

SEEPAGE COLLAR DIMENSION TABLE

PIPE DIAMETER	NOMINAL COLLAR SIZE	FABRICATIONS DIMENSIONS	
		W(WIDTH)	H(HEIGHT)
12(300) 15(375), 18(450) 21(525), 24(600)	8'x6' (2.4m x 1.8m)	8'-0" (2.44m)	38(966)
27(675) 30(750)	8'x7' (2.4m x 2.1m)	8'-0" (2.44m)	3'-8" (1.12m)
36(900), 42(1050) 48(1200)	10'x7' (3.0m x 2.1m)	10'-0" (3.05m)	3'-8" (1.12m)

Collar dimensions shown may be increased to allow fabrication from standard size sheets.

SEEPAGE COLLAR SPACING
Less than 24(600) pipe: 100' (30m) spacing or midpoint
Equal to or greater than 24(600) pipe: 80' (24m) spacing or midpoint

All dimensions are in inches (millimeters) unless otherwise noted.

01-01-97	RENUM. J-10.02, NEW REVISION BOX, REVISED	
	TITLE BOX, REVISED DESIGNER NOTES	
10-16-06	REVISED TO 2007 SPEC.	

STATE OF ILLINOIS
DEPARTMENT OF TRANSPORTATION

DETAILS OF SEEPAGE COLLARS FOR BURIED PIPES

NOT TO SCALE

CADD STD. 601401-D4

F.A.P RTE.	SECTION	COUNTY	TOTAL SHEETS	SHEET NO.
313	7-2 : 6-1	HENDERSON	976	559
		CONTRACT NO. 68409		

FED. ROAD DIST. NO. | ILLINOIS | FED. AID PROJECT