RTE.	SECTION	COUNTY	TOTAL SHEETS	SHEET NO
T.R. 256	06-11116-00-BR	MACON	14	5
STA. 8+67.32		TO STA. 21+14.18		
FED. ROAD DIST. NO.		ILLINOIS	PROJECT: BROS-1151(63)	

CONTRACT NO. 95530

PLAN		BY	DATE
NOTE BOOK NO.	SURVEYED / PLOTTED / ALIGNMENT ORIGINED / RT.-OF-WAY CHECKED / CADD FILE NAME		

PROFILE		BY	DATE
NOTE BOOK NO.	SURVEYED / PLOTTED / GRADES CHECKED / BAL. NOTED / STRUCTURE NOTATIONS CHKD		

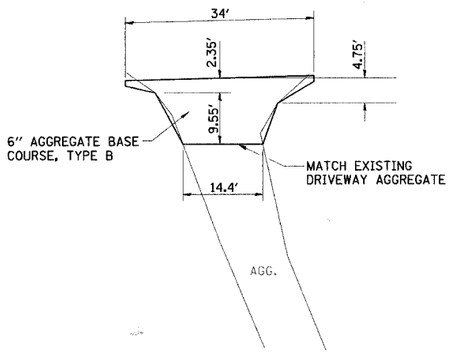

PRIVATE ENTRANCE DETAIL
STA. 16+82.83

AGGREGATE BASE COURSE, TYPE B
TOTAL = 10 TONS

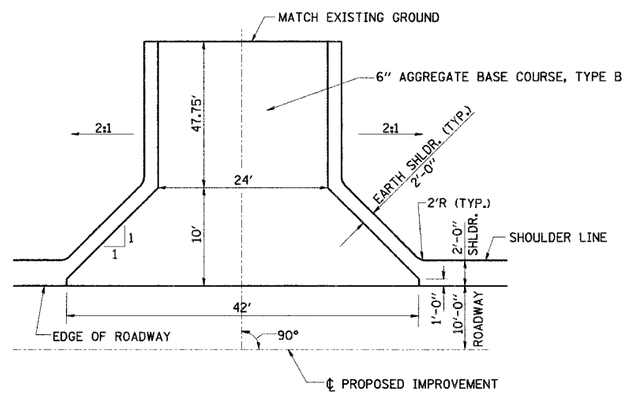

FIELD ENTRANCE DETAIL
STA. 13+50.00

AGGREGATE BASE COURSE, TYPE B
TOTAL = 57 TONS

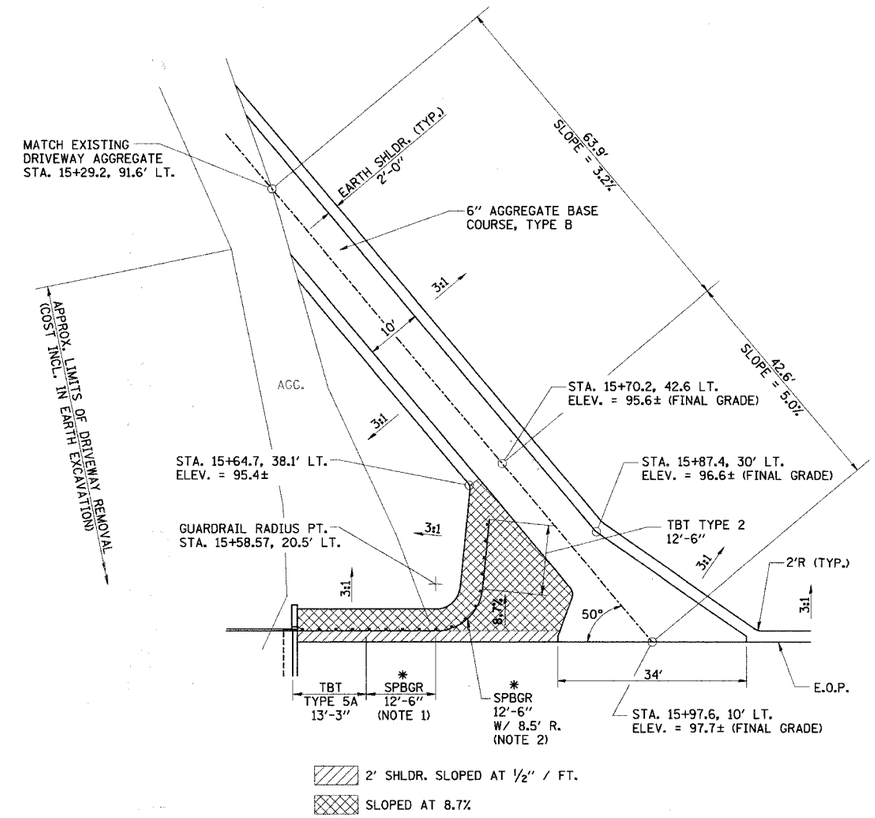

* PAY LIMITS OF STEEL PLATE BEAM GUARDRAIL, SHORT RADIUS = 25'-0"

PRIVATE ENTRANCE DETAIL
STA. 16+06.00

AGGREGATE BASE COURSE, TYPE B
TOTAL = 50 TONS

NOTES:

1. CONSTRUCT ACCORDING TO STANDARD 631011-04 FOR TRAFFIC BARRIER TERMINAL TYPE 2, EXCEPT DELETE END SECTION AND SPLICE INTO RADIUS GUARDRAIL.
2. FOR THE 8'-6" RADIUS, THE RAIL IS NOT BOLTED TO THE POST LOCATED AT THE MIDPOINT OF THE CURVE.

ENTRANCE DETAILS