CONTRACT NO. 70128

F.A.P. RTE.	SECTION	COUNTY	TOTAL SHEETS	SHEET NO.
840	(121,122)RS-3	VERMILION	89	49
STA.		TO STA.		
FED. ROAD DIST. NO.	ILLINOIS	FED. AID PROJECT		

SHEET 2 OF 3

CONCRETE GUTTER RECONSTRUCTION DETAIL

RT. STA. 850+10 TO STA. 851+61.75
LT. STA. 850+10 TO STA. 851+61.75
RT. STA. 852+00.25 TO STA. 854+83
LT. STA. 852+00.25 TO STA. 854+83
RT. STA. 861+55.00 TO STA. 862+73.75
LT. STA. 861+55.00 TO STA. 862+73.75
RT STA. 862+14.00 TO STA. 864+82.00
LT. STA. 862+14.00 TO STA. 864+82.00

CONCRETE GUTTER, TYPE A (SPECIAL)

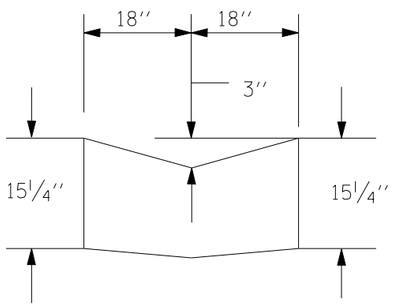

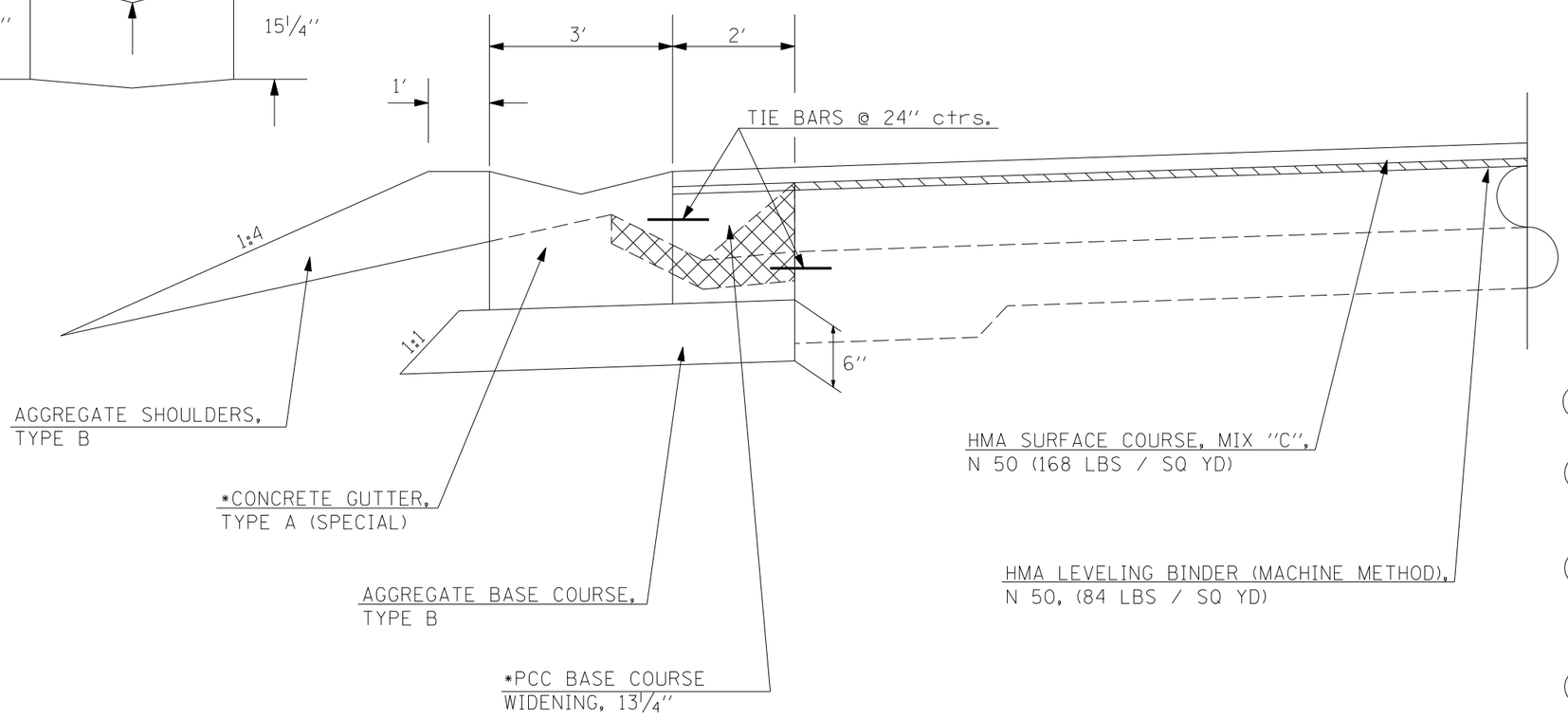

* See Article 606.07 (a) for Constructing Monolithically.

HMA SURFACE REMOVAL, ¾''

GUTTER REMOVAL

DETAIL NOTES

1. Tie Bars shall be No. 6 unless otherwise shown.
2. Tie Bars shall not be paid for separately, but shall be considered incidental to the various pay items.
3. Aggregate Base Course, Type B shall not be paid for separately, but shall be considered incidental to the various pay items.
4. This work shall be paid for at the contract unit price per foot for Concrete Gutter, Type A (Special) and per SQ YD for PCC Base Course, 13'' which price shall include all labor and materials as specified and no additional compensation shall be allowed.

REVISIONS	
NAME	DATE

ILLINOIS DEPARTMENT OF TRANSPORTATION

CONCRETE GUTTER RECONSTRUCTION DETAIL

SCALE: VERT. HORIZ.
DATE
DRAWN BY
CHECKED BY

PLOT DATE = 11/15/2007
FILE NAME = s:\projects\d805808 (d8)\rev_plans\hts.dgn
PLOT SCALE = 2.2353 ' / IN.
USER NAME = cellurbe