CREATED: 03-23-95

CONTRACT NO. 62833

F.A. RTE.	SECTION	COUNTY	TOTAL SHEETS	SHEET NO.
VAR.	2004-126I	COOK	8	8
STA.		TO STA.		
FED. ROAD DIST. NO.	ILLINOIS	FED. AID PROJECT		

PARTIAL RAMP CLOSURE DETAILS

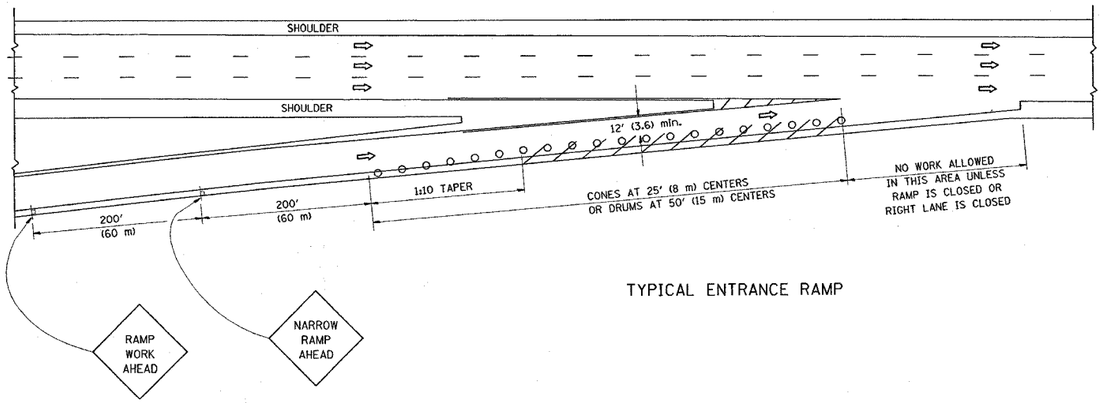

TYPICAL ENTRANCE RAMP

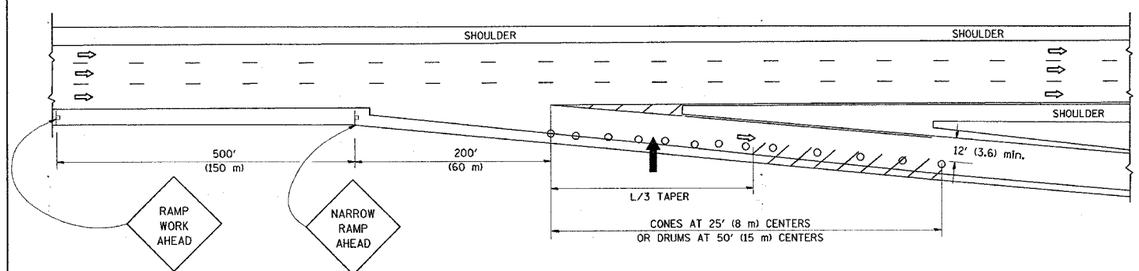

TYPICAL EXIT RAMP

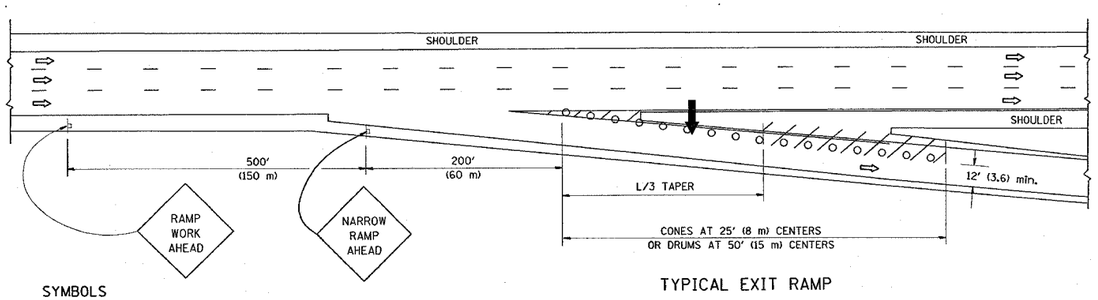

TYPICAL EXIT RAMP

SYMBOLS

- ARROWBOARD
- WORK AREA
- SIGN ON PORTABLE OR PERMANENT SUPPORT
- FLAGGER WITH CONTROL SIGN
- TYPE II BARRICADE, DRUM OR VERTICAL BARRICADE WITH STEADY BURN MONO-DIRECTIONAL LIGHT
- CONE, DRUM OR BARRICADE

GENERAL NOTES

1. THE "L" DISTANCE EQUALS:

SPEED LIMIT	FORMULAS	
	METRIC	ENGLISH
45 mph (80 km/h) OR GREATER:	L=0.65(W)(S)	L=(W)(S)

W = WIDTH OF OFFSET IN FEET (METERS)
S = NORMAL POSTED SPEED MPH (KM/H)

2. PLASTIC DRUMS WITH HIGH PERFORMANCE REFLECTIVE SHEETING AND STEADY BURNING LIGHTS ARE REQUIRED FOR ALL NIGHTIME CLOSURES.
3. ALL SIGNS SHALL BE POST MOUNTED IF THE CLOSURE TIME EXCEEDS FOUR DAYS.
4. FLASHING LIGHTS SHALL BE USED DURING THE HOURS OF DARKNESS AND SHALL BE INSTALLED ABOVE THE FIRST TWO SETS OF SIGNS.
5. THE IMPACT ATTENTUATOR, TEMPORARY IS NOT REQUIRED WHEN THE TEMPORARY CONCRETE BARRIER WALL IS PROTECTED BY OR IS TIED INTO THE EXISTING GUARDRAIL. IF OFFSET IS LESS THAN 5 FEET USE "TRAFFIC BARRIER TERMINAL, TYPE III, TEMPORARY" DEVICE TO MEET NCHRP350 FOR POSTED SPEED.
6. AUTHORIZATION FROM THE DISTRICT'S BUREAU OF TRAFFIC IS REQUIRED FOR ALL FREEWAY CLOSURES.
7. THE FLAGGER AND FLAGGER SIGN ARE REQUIRED AT THE ABOVE WORK SITES WHEN:
   a. FOUR OR MORE WORK VEHICLES ENTER THE TRAFFIC LANES IN A ONE HOUR PERIOD.
   b. THE WORK AVTIVITY REQUIRES FREQUENT ENCROACHMENT INTO THE LANE OPEN TO TRAFFIC.

   THE FLAGGER SHALL BE STATIONED APPROXIMATELY 100' (30 m) TO 200' (60 m) IN ADVANCE OF THE WORKERS.

SHOULDER CLOSURE DETAILS

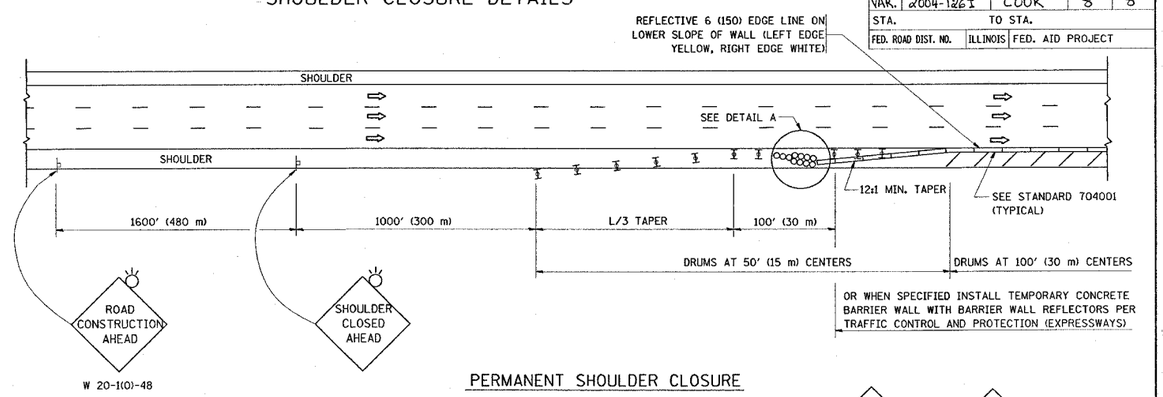

W 20-1(0)-48

PERMANENT SHOULDER CLOSURE

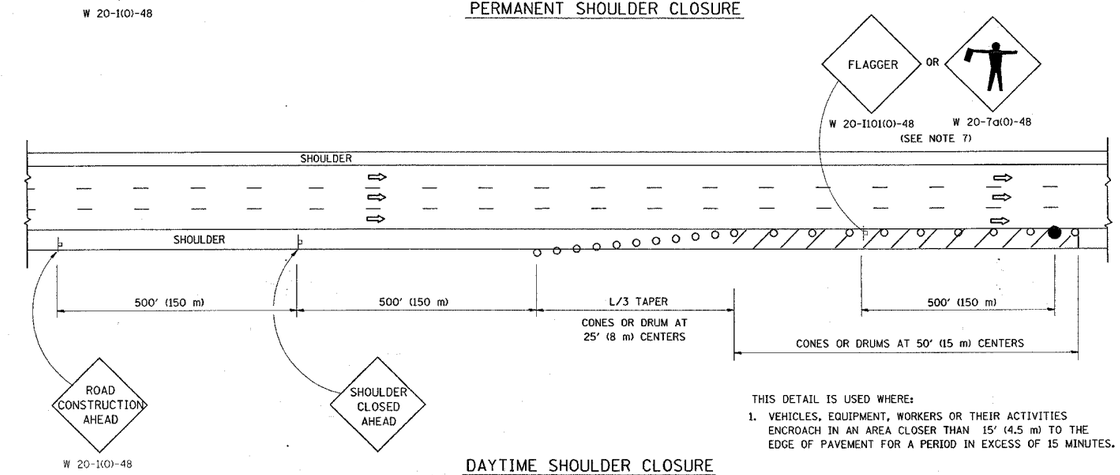

W 20-1(0)-48

DAYTIME SHOULDER CLOSURE

THIS DETAIL IS USED WHERE:

1. VEHICLES, EQUIPMENT, WORKERS OR THEIR ACTIVITIES ENCROACH IN AN AREA CLOSER THAN 15' (4.5 m) TO THE EDGE OF PAVEMENT FOR A PERIOD IN EXCESS OF 15 MINUTES.

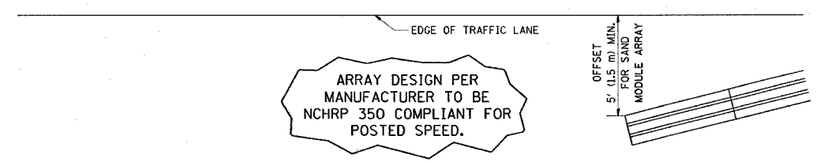

DETAIL "A"
IMPACT ATTENTUATOR, TEMPORARY
(SEE NOTE 5)

ALL DIMENSIONS ARE IN INCHES (MILLIMETERS) UNLESS OTHERWISE SHOWN.

REVISIONS	
NAME	DATE
DWS	11/96
JAF	12/02
NCHRP 350	04/03
JAF	2/06
SPB	1/07

ILLINOIS DEPARTMENT OF TRANSPORTATION

TRAFFIC CONTROL DETAILS
FOR FREEWAY
SHOULDER CLOSURES
PARTIAL RAMP CLOSURES

SCALE: NONE

DESIGNED BY: DWS
DRAWN BY
CHECKED BY

TC-17

PLOT DATE = 12/17/2007
FILE NAME = c:\pw_work\dotsmd\tc17.dgn
PLOT SCALE = 50.0000 ' / IN.
USER NAME = bauerdl