030

01-17-2020 LETTING ITEM 030

F.A.I. RTE.	SECTION	COUNTY	TOTAL SHEETS	SHEET NO.
80	(50-3)HBR-3	LASALLE	137	1
		ILLINOIS	CONTRACT NO. 66C59	

INDEX OF SHEETS

1	COVER SHEET
2	GENERAL NOTES AND COMMITMENTS
3	SUMMARY OF QUANTITIES
15	TYPICAL SECTIONS
19	SCHEDULES
25	ALIGNMENTS & ROW
29	PLAN & PROFILE SHEETS
35	REMOVAL PLAN
38	STAGING DETAILS
42	EROSION CONTROL PLANS
45	DETAILS
61	PROPOSED STRUCTURE PLANS
85	EXISTING BRIDGE PLANS
101	CH 9 CROSS SECTIONS
121	TR 289 CROSS SECTIONS
131	FR 1220 CROSS SECTIONS

HIGHWAY STANDARDS ON SHEET #2

STATE OF ILLINOIS
DEPARTMENT OF TRANSPORTATION

PROPOSED HIGHWAY PLANS

FAI ROUTE 80 (I–80)
SECTION (50–3)HBR–3
PROJECT NHPP–T03P(098)
BRIDGE REPLACEMENT
LASALLE COUNTY

C–93–044–19

D-93-024-19

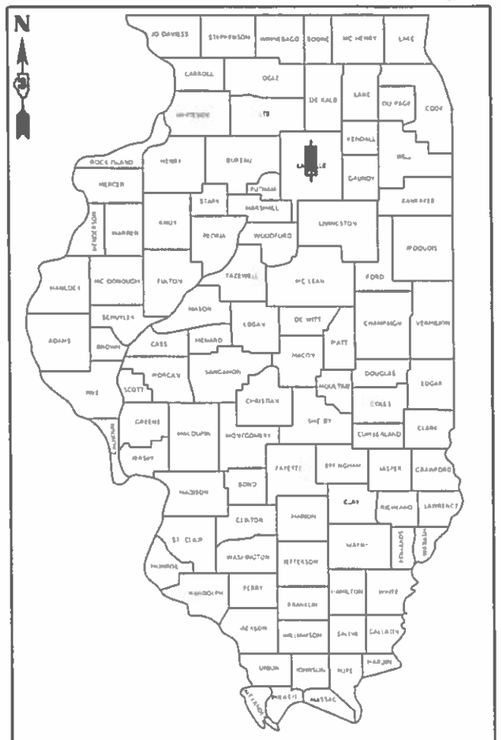

CH 9 OVER I–80
STA 115+00 (CH 9)
STA 210+95.60 (I–80)
EX SN 050–0081
PROP SN 050–0261

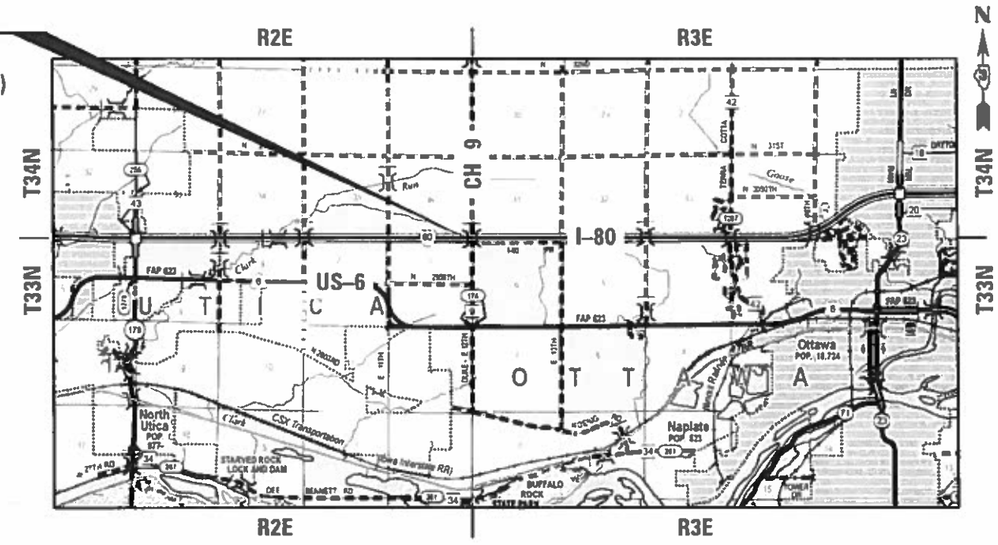

I-80
2019 ADT = 33700
MU = 29.0% SU = 3.1% PV = 67.9%
CH 9
2016 ADT = 325
MU = 29.0% SU = 9.2% PV = 61.8%

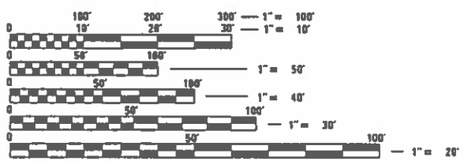

FULL SIZE PLANS HAVE BEEN PREPARED USING STANDARD ENGINEERING SCALES. REDUCED SIZED PLANS WILL NOT CONFORM TO STANDARD SCALES. IN MAKING MEASUREMENTS ON REDUCED PLANS, THE ABOVE SCALES MAY BE USED.

J.U.L.I.E.
JOINT UTILITY LOCATION INFORMATION FOR EXCAVATORS
1–800–892–0123
OR 811

STATE OF ILLINOIS
DEPARTMENT OF TRANSPORTATION

SUBMITTED 10/31 20 19
REGIONAL ENGINEER
Dec 6 19
ENGINEER OF DESIGN AND ENVIRONMENT
Dec 6 20 19
DIRECTOR OF HIGHWAYS PROJECT IMPLEMENTATION

PROJECT ENGINEER: BRAD DUNCAN P.E.
UNIT CHIEF: LUIS CALDERON P.E.
DISTRICT NO. (815)–434–6131
CONTRACT NO. 66C59

GROSS LENGTH & NET LENGTH ALONG CH 9 = 2,450 FT. = 0.464 MILES

PRINTED BY THE AUTHORITY OF THE STATE OF ILLINOIS

GENERAL NOTES

THE THICKNESS OF HMA SHOWN ON THE PLANS IS THE NOMINAL THICKNESS. DEVIATIONS FROM THE NOMINAL THICKNESS WILL BE PERMITTED WHEN SUCH DEVIATIONS OCCUR DUE TO IRREGULARITIES IN THE EXISTING SURFACE OR BASE ON WHICH THE HMA IS PLACED.

THE HMA SURFACE OF ALL MAILBOX TURNOUTS, PRIVATE ENTRANCES, COMMERCIAL ENTRANCES, AND SIDE ROADS SHALL BE MADE NEATLY, IN A WORKMANLIKE MANNER, AND SHALL ACCURATELY CONFORM TO THE SHAPES AND DIMENSIONS SHOWN ON THE PLAN DETAILS. IF REQUIRED BY THE ENGINEER, THE CONTRACTOR SHALL SAW CUT THE HMA SURFACE TO CONFORM TO THE SHAPES AND DIMENSIONS SHOWN ON THE PLAN DETAILS. THIS WORK WILL BE INCLUDED IN THE COST OF THE HMA SURFACE.

THE BASE COURSE WIDENING SHALL BE CARRIED THROUGH ALL ENTRANCES, SIDE ROADS, AND MAILBOX TURNOUTS. EXCEPTIONS WILL BE SHOWN ON THE PLANS.

EXCEPT AS NOTED ON THE PLANS, PAVEMENT GRADES SHOWN ARE AT THE TOP OF PAVEMENT SURFACES.

BEFORE ORDERING PIPE CULVERTS OR PIPE DRAINS, THE CONTRACTOR SHALL CONSULT THE ENGINEER FOR EXACT LENGTHS.

THE ENGINEER WILL BE THE SOLE JUDGE CONCERNING CURING TIME FOR THE VARIOUS HMA LIFTS.

FOR STABILIZATION, ALL TYPE III BARRICADES WILL REQUIRE A MINIMUM OF FOUR SAND BAGS PER BARRICADE.

SEEDING WILL NOT BE PERMITTED AT ANY TIME WHEN THE GROUND IS FROZEN, WET, OR IN AN UNTILLABLE CONDITION. LOCATIONS TO BE SEEDED WILL BE DETERMINED BY THE ENGINEER.

ONLY THOSE TREES DESIGNATED BY THE ENGINEER OR LISTED IN THE TREE REMOVAL SCHEDULE SHALL BE REMOVED. THE CONTRACTOR SHALL PROTECT ALL REMAINING TREES FROM DAMAGE DUE TO HIS OPERATIONS. TREES 3 INCHES OR GREATER IN DIAMETER AT BREAST HEIGHT WILL NOT BE CLEARED FROM APRIL 1 THROUGH SEPTEMBER 30.

THE FINISHED EARTHWORK SHALL HAVE A VEGETATION SUSTAINING SOIL COVERING THE TOP FOUR INCHES (100 MILLIMETERS) IN AREAS TO BE SEEDED OR SODDED. THE VEGETATION SUSTAINING SOIL REQUIRED WILL NOT BE PAID FOR SEPARATELY BUT WILL BE INCLUDED IN THE COST OF FURNISHED EXCAVATION.

ALL ELEVATIONS REFERRING TO U.S.G.S. MEAN SEA LEVEL DATUM.

ABANDONED UNDERGROUND UTILITIES THAT CONFLICT WITH CONSTRUCTION SHALL BE DISPOSED OF OUTSIDE THE LIMITS OF THE RIGHT OF WAY ACCORDING TO ARTICLE 202.03 OF THE STANDARD SPECIFICATIONS AND AS DIRECTED BY THE ENGINEER. THIS WORK WILL NOT BE PAID FOR SEPARATELY, BUT WILL BE INCLUDED IN THE COST OF EARTH EXCAVATION.

ANY REFERENCE TO A STANDARD IN THESE PLANS SHALL BE INTERPRETED TO MEAN THE EDITION AS INDICATED BY THE SUBNUMBER SHOWN IN THE LIST OF STANDARDS OR THE COPY INCLUDED IN THESE PLANS.

THE FOLLOWING RATES OF APPLICATION HAVE BEEN USED IN CALCULATING PLAN QUANTITIES:

GRANULAR MATERIALS	2.05	TONS / CU YD
HMA RESURFACING	112	LBS / SQ YD / IN
SHORT TERM PAVEMENT MARKING	10	FT /100 FT OF APPLICATION

ALL DAMAGE TO DEPARTMENT OWNED UNDERGROUND FACILITIES, CAUSED BY THE CONTRACTOR SHALL BE REPAIRED TO THE SATISFACTION OF THE DEPARTMENT AT THE CONTRACTOR'S EXPENSE. THIS SHALL INCLUDE ALL TEMPORARY REPAIRS REQUIRED TO KEEP THE FACILITY OPERATIONAL WHILE MATERIAL IS BEING OBTAINED TO MAKE PERMANENT REPAIRS. SPLICING OF ELECTRIC CABLE WILL NOT BE ALLOWED. ELECTRIC CABLE SHALL BE REPLACED FROM POLE TO POLE OR CONTROLLER.

MEMBERS OF JULIE KNOWN TO BE WITHIN THE LIMITS OF THE IMPROVEMENT ARE:

AMEREN
COM BELT ENERGY
AT&T
NICOR GAS

THE CONTRACTOR SHALL CONTACT JULIE AT LEAST 48 HOURS PRIOR TO EXCAVATION TO DETERMINE WHICH UTILITIES ARE IN THE AREA.

COMMITMENTS

ENVIRONMENTAL COMMITMENTS

COORDINATION WITH DISTRICT OPERATIONS FOR USE OF INTERSTATE MESSAGE BOARD

FIELD TILE DRAINAGE

DOCUMENTATION OF PROPOSED STRUCTURE VERTICAL CLEARANCE

ACCESS TO ROADWAY DURING CONSTRUCTION

LIST OF ILLINOIS DOT HIGHWAY STANDARDS

BLR 21-9	TYPICAL APPLICATIONS OF TRAFFIC CONTROL DEVICES FOR CONSTRUCTION ON RURAL LOCAL HIGHWAYS
000001-07	STANDARD SYMBOLS, ABBREVIATIONS AND PATTERNS
001001-02	AREAS OF REINFORCEMENT BARS
001006	DECIMAL OF AN INCH AND OF A FOOT
280001-07	TEMPORARY EROSION CONTROL SYSTEMS
420001-09	PAVEMENT JOINTS
515001-04	NAME PLATE FOR BRIDGES
542011-02	CONCRETE END SECTIONS FOR ELLIPTICAL PIPE CULVERTS 15" (375mm) THRU 72" (1800 mm) EQUIVALENT DIAMETER
542311-07	TRAVERSABLE PIPE GRATE FOR CONCRETE END SECTION
542401-03	METAL FLARED END SECTION FOR PIPE CULVERTS
630001-12	STEEL PLATE BEAM GUARDRAIL
630201-07	PCC/HMA STABILIZATION AT STEEL PLATE BEAM GUARDRAIL
630301-09	SHOULDER WIDENING FOR TYPE 1 (SPECIAL) GUARDRAIL TERMINALS
631031-16	TRAFFIC BARRIER TERMINAL, TYPE 6
637006-04	CONCRETE BARRIER, DOUBLE FACE, 42 in. (1065mm) HEIGHT
642001-02	SHOULDER RUMBLE STRIPS, 16 INCH
643001-02	SAND MODULE IMPACT ATTENUATORS
664001-02	CHAIN LINK FENCE
665001-02	WOVEN WIRE FENCE
666001-01	RIGHT-OF-WAY MARKERS
667101-02	PERMANENT SURVEY MARKERS
701001-02	OFF-ROAD OPERATIONS 2L, 2W, MORE THAN 15' (4.5 m) AWAY
701006-05	OFF-ROAD OPERATIONS 2L, 2W, 15' (4.5 m) TO 24" (600 mm) FROM PAVEMENT EDGE
701101-05	OFF-ROAD OPERATIONS, MULTILANE, 15' (4.5 m) TO 24" (600 mm) FROM PAVEMENT EDGE
701106-02	OFF-ROAD OPERATIONS, MULTILANE, MORE THAN 15' (4.5 m) AWAY
701301-04	LANE CLOSURE, 2L, 2W, SHORT TIME OPERATIONS
701311-03	LANE CLOSURE, 2L, 2W, MOVING OPERATIONS - DAY ONLY
701400-09	APPROACH TO LANE CLOSURE, FREEWAY/EXPRESSWAY
701401-12	LANE CLOSURE, FREEWAY/EXPRESSWAY
701426-09	LANE CLOSURE, MULTILANE INTERMITTENT OR MOVING OPERATION, FOR SPEEDS ≥ 45 MPH
701428-01	TRAFFIC CONTROL, SETUP AND REMOVAL, FREEWAY/EXPRESSWAY
701901-08	TRAFFIC CONTROL DEVICES
704001-08	TEMPORARY CONCRETE BARRIER
720001-01	SIGN PANEL MOUNTING DETAILS
720006-04	SIGN PANEL ERECTION DETAILS
725001-01	OBJECT AND TERMINAL MARKERS
728001-01	TELESCOPING STEEL SIGN SUPPORT
731001-01	BASE FOR TELESCOPING STEEL SIGN SUPPORT
780001-05	TYPICAL PAVEMENT MARKINGS
781001-04	TYPICAL APPLICATIONS RAISED REFLECTIVE PAVEMENT MARKERS
782006-01	GUARDRAIL AND BARRIER WALL REFLECTOR MOUNTING DETAILS

STATE OF ILLINOIS
DEPARTMENT OF TRANSPORTATION
DISTRICT THREE
AS BUILT INFORMATION

SUPERVISING CONSTRUCTION FIELD ENGINEER

RESIDENT ENGINEER / TECHNICIAN

START & END DATES OF CONSTRUCTION:

INSPECTORS:

STATE OF ILLINOIS
DEPARTMENT OF TRANSPORTATION
DISTRICT THREE

PREPARED BY: DISTRICT STUDIES & PLANS ENGINEER

DATE: 10-21-19

EXAMINED BY: DISTRICT CONSTRUCTION ENGINEER

DISTRICT MATERIALS ENGINEER

DISTRICT OPERATIONS ENGINEER

FILE NAME = c:\pw_work\pwidot\ferguson\jh\d0318968\D66C59-sht-cover.dgn	USER NAME = ferguson\jh	DESIGNED -	REVISED -
		DRAWN -	REVISED -
	PLOT SCALE = 100.0000 ' / in.	CHECKED -	REVISED -
	PLOT DATE = 10/21/2019	DATE -	REVISED -

STATE OF ILLINOIS
DEPARTMENT OF TRANSPORTATION

GENERAL NOTES

SCALE: SHEET OF SHEETS STA. TO STA.

F.A.I RTE.	SECTION	COUNTY	TOTAL SHEETS	SHEET NO.
80	(50-3)HBR-3	LASALLE	137	2
		CONTRACT NO. 66C59		
		ILLINOIS FED. AID PROJECT		

REV. 11/19/19

CODE NO.	ITEM	UNIT	TOTAL QUANTITY	CONSTRUCTION CODE NHPP FUNDS 90%FED/10%STATE ROADWAY 0004 RURAL	NHPP FUNDS 90%FED/10%STATE BRIDGE 0010 050-0261	CI FUNDS 100% STATE ROADWAY 0004 RURAL
20100110	TREE REMOVAL (6 TO 15 UNITS DIAMETER)	UNIT	488	488		
20100210	TREE REMOVAL (OVER 15 UNITS DIAMETER)	UNIT	167	167		
20100500	TREE REMOVAL, ACRES	ACRE	1.25	1.25		
20200100	EARTH EXCAVATION	CU YD	6035	6035		
20200500	EARTH EXCAVATION (WIDENING)	CU YD	1.5	1.5		
20400800	FURNISHED EXCAVATION	CU YD	62049	62049		
20800150	TRENCH BACKFILL	CU YD	103	103		
21400100	GRADING AND SHAPING DITCHES	FOOT	200	200		
25000210	SEEDING, CLASS 2A	ACRE	0.25	0.25		
25000300	SEEDING, CLASS 3	ACRE	6.5	6.5		
25000310	SEEDING, CLASS 4	ACRE	4	4		
25000400	NITROGEN FERTILIZER NUTRIENT	POUND	598	598		
25000500	PHOSPHORUS FERTILIZER NUTRIENT	POUND	598	598		
25000600	POTASSIUM FERTILIZER NUTRIENT	POUND	598	598		

* SPECIALTY ITEM

*= SPECIALTY ITEM

CODE NO.	ITEM	UNIT	TOTAL QUANTITY	CONSTRUCTION CODE NHPP FUNDS 90%FED/10%STATE ROADWAY 0004 RURAL	NHPP FUNDS 90%FED/10%STATE BRIDGE 0010 050-0261	CI FUNDS 100% STATE ROADWAY 0004 RURAL
25100115	MULCH, METHOD 2	ACRE	4	4		
25100630	EROSION CONTROL BLANKET	SQ YD	30573	30573		
28000250	TEMPORARY EROSION CONTROL SEEDING	POUND	1038	1038		
28000305	TEMPORARY DITCH CHECKS	FOOT	560	560		
28000400	PERIMETER EROSION BARRIER	FOOT	5763	5763		
28000500	INLET AND PIPE PROTECTION	EACH	12	12		
31101810	SUBBASE GRANULAR MATERIAL, TYPE B 12"	SQ YD	5298	5298		
35100700	AGGREGATE BASE COURSE, TYPE A 8"	SQ YD	4526	4526		
40200800	AGGREGATE SURFACE COURSE, TYPE B	TON	265	265		
40201000	AGGREGATE FOR TEMPORARY ACCESS	TON	1612	1612		
40300200	BITUMINOUS MATERIALS (PRIME COAT)	TON	6.8	6.8		
40300400	BITUMINOUS MATERIALS (COVER AND SEAL COATS)	TON	19.2	19.2		
40300500	COVER COAT AGGREGATE	TON	86	86		
40300600	SEAL COAT AGGREGATE	TON	43	43		

* SPECIALTY ITEM

*= SPECIALTY ITEM

CODE NO.	ITEM	UNIT	TOTAL QUANTITY	CONSTRUCTION CODE NHPP FUNDS 90%FED/10%STATE ROADWAY 0004 RURAL	NHPP FUNDS 90%FED/10%STATE BRIDGE 0010 050-0261	CI FUNDS 100% STATE ROADWAY 0004 RURAL
40600290	BITUMINOUS MATERIALS (TACK COAT)	POUND	6630	4775		1855
40603080	HOT-MIX ASPHALT BINDER COURSE, IL-19.0, N50	TON	1333	1333		
40603310	HOT-MIX ASPHALT SURFACE COURSE, MIX "C", N50	TON	439	439		
40603545	POLYMERIZED HOT-MIX ASPHALT SURFACE COURSE, MIX "D", N90	TON	120	120		
40800050	INCIDENTAL HOT-MIX ASPHALT SURFACING	TON	448	102		346
42000060	WELDED WIRE REINFORCEMENT	SQ YD	75	75		
42000080	PAVEMENT CONNECTOR (PCC) FOR BRIDGE APPROACH SLAB	SQ YD	93	93		
42001300	PROTECTIVE COAT	SQ YD	159	159		
44000100	PAVEMENT REMOVAL	SQ YD	5057	5057		
44000155	HOT-MIX ASPHALT SURFACE REMOVAL, 1 1/2"	SQ YD	4122			4122
44000157	HOT-MIX ASPHALT SURFACE REMOVAL, 2"	SQ YD	1067	1067		
44000200	DRIVEWAY PAVEMENT REMOVAL	SQ YD	726	726		
48101200	AGGREGATE SHOULDERS, TYPE B	TON	649	649		
48102100	AGGREGATE WEDGE SHOULDER, TYPE B	TON	13	13		

* SPECIALTY ITEM

CODE NO.	ITEM	UNIT	TOTAL QUANTITY	CONSTRUCTION CODE NHPP FUNDS 90%FED/10%STATE ROADWAY 0004 RURAL	NHPP FUNDS 90%FED/10%STATE BRIDGE 0010 050-0261	CI FUNDS 100% STATE ROADWAY 0004 RURAL
48203021	HOT-MIX ASPHALT SHOULDERS, 6"	SQ YD	277	277		
50100100	REMOVAL OF EXISTING STRUCTURES	EACH	1		1	
50105220	PIPE CULVERT REMOVAL	FOOT	275	275		
50200100	STRUCTURE EXCAVATION	CU YD	386		386	
50300225	CONCRETE STRUCTURES	CU YD	136.5		136.5	
50300255	CONCRETE SUPERSTRUCTURE	CU YD	266		266	
50300260	BRIDGE DECK GROOVING	SQ YD	882		882	
50300300	PROTECTIVE COAT	SQ YD	1314		1314	
50301350	CONCRETE SUPERSTRUCTURE (APPROACH SLAB)	CU YD	85.3		85.3	
50500105	FURNISHING AND ERECTING STRUCTURAL STEEL	L SUM	1		1	
50500505	STUD SHEAR CONNECTORS	EACH	2304		2304	
50800205	REINFORCEMENT BARS, EPOXY COATED	POUND	118710		118710	
51100100	SLOPE WALL 4 INCH	SQ YD	360		360	
51201700	FURNISHING STEEL PILES HP 12 X 74	FOOT	816		816	

* SPECIALTY ITEM

CODE NO.	ITEM	UNIT	TOTAL QUANTITY	CONSTRUCTION CODE NHPP FUNDS 90%FED/10%STATE ROADWAY 0004 RURAL	NHPP FUNDS 90%FED/10%STATE BRIDGE 0010 050-0261	CI FUNDS 100% STATE ROADWAY 0004 RURAL
51202305	DRIVING PILES	FOOT	816		816	
51500100	NAME PLATES	EACH	1		1	
52100010	ELASTOMERIC BEARING ASSEMBLY, TYPE I	EACH	6		6	
52100520	ANCHOR BOLTS, 1"	EACH	24		24	
52100540	ANCHOR BOLTS, 1 1/2"	EACH	12		12	
542A5476	PIPE CULVERTS, CLASS A, TYPE 1 EQUIVALENT ROUND-SIZE 21"	FOOT	44	44		
542D0223	PIPE CULVERTS, CLASS D, TYPE 1 18"	FOOT	337	337		
5421D018	PIPE CULVERTS, CLASS D, TYPE 1 18" (TEMPORARY)	FOOT	200	200		
54260315	TRAVERSABLE PIPE GRATE FOR CONCRETE END SECTION	FOOT	16	16		
54262718	METAL FLARED END SECTIONS 18"	EACH	8	8		
54263321	CONCRETE END SECTION, STANDARD 542011, 21", 1:3	EACH	2	2		
58600101	GRANULAR BACKFILL FOR STRUCTURES	CU YD	65		65	
59100100	GEOCOMPOSITE WALL DRAIN	SQ YD	72		72	
60100915	PIPE DRAINS 6"	FOOT	10	10		

* SPECIALTY ITEM

CODE NO.	ITEM	UNIT	TOTAL QUANTITY	CONSTRUCTION CODE NHPP FUNDS 90%FED/10%STATE ROADWAY 0004 RURAL	NHPP FUNDS 90%FED/10%STATE BRIDGE 0010 050-0261	CI FUNDS 100% STATE ROADWAY 0004 RURAL
60100925	PIPE DRAINS 8"	FOOT	10	10		
60100935	PIPE DRAINS 10"	FOOT	10	10		
60100945	PIPE DRAINS 12"	FOOT	10	10		
60100955	PIPE DRAINS 15"	FOOT	10	10		
60100965	PIPE DRAINS 18"	FOOT	10	10		
61100605	MISCELLANEOUS CONCRETE	CU YD	10	10		
61101007	STORM SEWERS PROTECTED, CLASS A, 6"	FOOT	10	10		
61101009	STORM SEWERS PROTECTED, CLASS A, 8"	FOOT	10	10		
61101011	STORM SEWERS PROTECTED, CLASS A, 10"	FOOT	10	10		
61101013	STORM SEWERS PROTECTED, CLASS A, 12"	FOOT	10	10		
61101017	STORM SEWERS PROTECTED, CLASS A, 15"	FOOT	10	10		
61101020	STORM SEWERS PROTECTED, CLASS A, 18"	FOOT	10	10		
61133100	FIELD TILE JUNCTION VAULTS, 2' DIA.	EACH	1	1		
61133200	FIELD TILE JUNCTION VAULTS, 3' DIA.	EACH	1	1		

* SPECIALTY ITEM

	CODE NO.	ITEM	UNIT	TOTAL QUANTITY	CONSTRUCTION CODE NHPP FUNDS 90%FED/10%STATE ROADWAY 0004 RURAL	NHPP FUNDS 90%FED/10%STATE BRIDGE 0010 050-0261	CI FUNDS 100% STATE ROADWAY 0004 RURAL
	61139900	STORM SEWERS (SPECIAL), 6"	FOOT	10	10		
	61140000	STORM SEWERS (SPECIAL), 8"	FOOT	10	10		
	61140100	STORM SEWERS (SPECIAL), 10"	FOOT	10	10		
	61140200	STORM SEWERS (SPECIAL), 12"	FOOT	10	10		
	61140400	STORM SEWERS (SPECIAL), 15"	FOOT	10	10		
	61140600	STORM SEWERS (SPECIAL), 18"	FOOT	10	10		
*	63000001	STEEL PLATE BEAM GUARDRAIL, TYPE A, 6 FOOT POSTS	FOOT	50	50		
*	63000003	STEEL PLATE BEAM GUARDRAIL, TYPE A, 9 FOOT POSTS	FOOT	300	300		
*	63100085	TRAFFIC BARRIER TERMINAL, TYPE 6	EACH	5	5		
*	63100167	TRAFFIC BARRIER TERMINAL, TYPE 1 (SPECIAL) TANGENT	EACH	5	5		
	63200310	GUARDRAIL REMOVAL	FOOT	2525	2525		
	63700280	CONCRETE BARRIER, DOUBLE FACE, 44 INCH HEIGHT	FOOT	60	60		
	63700900	CONCRETE BARRIER BASE	FOOT	60	60		
*	64200116	SHOULDER RUMBLE STRIPS, 16 INCH	FOOT	4800	4800		

* SPECIALTY ITEM

*= SPECIALTY ITEM

	CODE NO.	ITEM	UNIT	TOTAL QUANTITY	CONSTRUCTION CODE NHPP FUNDS 90%FED/10%STATE ROADWAY 0004 RURAL	NHPP FUNDS 90%FED/10%STATE BRIDGE 0010 050-0261	CI FUNDS 100% STATE ROADWAY 0004 RURAL
	64301090	ATTENUATOR BASE	SQ YD	62	62		
	66500105	WOVEN WIRE FENCE, 4'	FOOT	1445	1445		
	66600105	FURNISHING AND ERECTING RIGHT OF WAY MARKERS	EACH	14	14		
	66600205	REERECTING RIGHT OF WAY MARKERS	EACH	4	4		
*	66700205	PERMANENT SURVEY MARKERS, TYPE I	EACH	1	1		
*	66900200	NON-SPECIAL WASTE DISPOSAL	CU YD	995	995		
*	66900530	SOIL DISPOSAL ANALYSIS	EACH	3	3		
*	66901001	REGULATED SUBSTANCES PRE-CONSTRUCTION PLAN	LSUM	1	1		
*	66901006	REGULATED SUBSTANCES MONITORING	CAL DA	7	7		
*	66901003	REGULATED SUBSTANCES FINAL CONSTRUCTION REPORT	LSUM	1	1		
	67000400	ENGINEER'S FIELD OFFICE, TYPE A	CAL MO	7	7		
	67100100	MOBILIZATION	L SUM	1	1		
	67201000	SEALING ABANDONED WATER WELLS	EACH	1	1		
	70103815	TRAFFIC CONTROL SURVEILLANCE	CAL DA	100	100		

* SPECIALTY ITEM

*= SPECIALTY ITEM

FILE NAME = c:\pw_work\pwidot\calderonl\d0318968\D366C59-sht-SOO.dgn	USER NAME = calderonl	DESIGNED -	REVISED -
		DRAWN -	REVISED -
	PLOT SCALE = 100.0000 ' / in.	CHECKED -	REVISED -
	PLOT DATE = 10/31/2019	DATE -	REVISED -

STATE OF ILLINOIS
DEPARTMENT OF TRANSPORTATION

SUMMARY OF QUANTITIES

SCALE: SHEET OF SHEETS STA. TO STA.

F.A.I. RTE.	SECTION	COUNTY	TOTAL SHEETS	SHEET NO.
80	(50-3)HBR-3	LASALLE	137	10

CONTRACT NO. 66C59

ILLINOIS FED. AID PROJECT

REV. 11/19/19

	CODE NO.	ITEM	UNIT	TOTAL QUANTITY	CONSTRUCTION CODE NHPP FUNDS 90%FED/10%STATE ROADWAY 0004 RURAL	NHPP FUNDS 90%FED/10%STATE BRIDGE 0010 050-0261	CI FUNDS 100% STATE ROADWAY 0004 RURAL
	70200100	NIGHTTIME WORK ZONE LIGHTING	L SUM	1	1		
	70300220	TEMPORARY PAVEMENT MARKING - LINE 4"	FOOT	10344	10344		
	70300240	TEMPORARY PAVEMENT MARKING - LINE 6"	FOOT	862	862		
	70400100	TEMPORARY CONCRETE BARRIER	FOOT	325	325		
	70400200	RELOCATE TEMPORARY CONCRETE BARRIER	FOOT	325	325		
	70600280	IMPACT ATTENUATORS, TEMPORARY (SEVERE USE,NARROW), TEST LEVEL 3	EACH	2	2		
	70600370	IMPACT ATTENUATORS, RELOCATE (SEVERE USE, NARROW), TEST LEVEL 3	EACH	2	2		
	72000100	SIGN PANEL - TYPE 1	SQ FT	10	10		
*	72400310	REMOVE SIGN PANEL - TYPE 1	SQ FT	10	10		
*	72501000	TERMINAL MARKER - DIRECT APPLIED	EACH	5	5		
	73000100	WOOD SIGN SUPPORT	FOOT	41	41		
*	78001110	PAINT PAVEMENT MARKING - LINE 4"	FOOT	27604	27200		404
*	78008310	POLYUREA PAVEMENT MARKING TYPE II - LINE 4"	FOOT	4800	4800		
*	78100100	RAISED REFLECTIVE PAVEMENT MARKER	EACH	34	34		

* SPECIALTY ITEM

*= SPECIALTY ITEM

FILE NAME = c:\pw_work\pwidot\fergusonjh\d0318968\D66C59-sht-S00.dgn	USER NAME = fergusonjh	DESIGNED -	REVISED -
		DRAWN -	REVISED -
	PLOT SCALE = 100.0000 ' / in.	CHECKED -	REVISED -
	PLOT DATE = 10/21/2019	DATE -	REVISED -

STATE OF ILLINOIS
DEPARTMENT OF TRANSPORTATION

SUMMARY OF QUANTITIES

SCALE: SHEET OF SHEETS STA. TO STA.

F.A.I. RTE.	SECTION	COUNTY	TOTAL SHEETS	SHEET NO.
80	(50-3)HBR-3	LASALLE	137	11
		CONTRACT NO. 66C59		
	ILLINOIS	FED. AID PROJECT		

REV. 11/19/19

	CODE NO.	ITEM	UNIT	TOTAL QUANTITY	CONSTRUCTION CODE NHPP FUNDS 90%FED/10%STATE ROADWAY 0004 RURAL	NHPP FUNDS 90%FED/10%STATE BRIDGE 0010 050-0261	CI FUNDS 100% STATE ROADWAY 0004 RURAL
	78200005	GUARDRAIL REFLECTORS, TYPE A	EACH	17	17		
	78300200	RAISED REFLECTIVE PAVEMENT MARKER REMOVAL	EACH	34	34		
	X0322348	IMPACT ATTENUATORS, (NON-REDIRECTIVE), TEST LEVEL 3, SPECIAL	EACH	2	2		
	X0326649	LINEAR DELINEATOR PANELS, 6 INCH	EACH	4	4		
	X0326880	MESSAGE BOARD VEHICLE DRIVER	HOUR	1080	1080		
	X0326907	PORTABLE, VEHICLE MOUNTED, CHANGEABLE MESSAGE SIGN	CAL MO	5.7	5.7		
	X0327622	REMOVE AND REINSTALL HIGH TENSION CABLE MEDIAN BARRIER	FOOT	391	391		
	X0327809	LINEAR DELINEATOR PANELS, 4 INCH	EACH	10	10		
	X0327980	PAVEMENT MARKING REMOVAL - WATER BLASTING	SQ FT	3845	3845		
	X2130010	EXPLORATION TRENCH, SPECIAL	FOOT	500	500		
	X2600011	REMOVE AND RELOCATE SIGN PANEL	EACH	2	2		
	X2600012	REMOVE AND RELOCATE SIGN PANEL AND POLE ASSEMBLY	EACH	13	13		
*	X2700010	PREFORMED PLASTIC PAVEMENT MARKING, TYPE D - LINE 6"	FOOT	600	600		
	X4810200	AGGREGATE SHOULDER REMOVAL	CU YD	1.4	1.4		

* SPECIALTY ITEM

*= SPECIALTY ITEM

FILE NAME = c:\pw_work\pwidot\fergusonjh\d0318968\D366C59-sht-S00.dgn	USER NAME = fergusonjh	DESIGNED -	REVISED -
		DRAWN -	REVISED -
	PLOT SCALE = 100.0000 ' / in.	CHECKED -	REVISED -
	PLOT DATE = 10/21/2019	DATE -	REVISED -

STATE OF ILLINOIS
DEPARTMENT OF TRANSPORTATION

SUMMARY OF QUANTITIES

SCALE: SHEET OF SHEETS STA. TO STA.

F.A.I. RTE.	SECTION	COUNTY	TOTAL SHEETS	SHEET NO.
80	(50-3)HBR-3	LASALLE	137	12

CONTRACT NO. 66C59

ILLINOIS FED. AID PROJECT

REV. 11/19/19

	CODE NO.	ITEM	UNIT	TOTAL QUANTITY	CONSTRUCTION CODE NHPP FUNDS 90%FED/10%STATE ROADWAY 0004 RURAL	NHPP FUNDS 90%FED/10%STATE BRIDGE 0010 050-0261	CI FUNDS 100% STATE ROADWAY 0004 RURAL
	X6431110	REMOVE ATTENUATOR BASE	EACH	2	2		
	X6640298	CHAIN LINK FENCE (SPECIAL)	FOOT	670	670		
	X6640302	CHAIN LINK FENCE REMOVAL (SPECIAL)	FOOT	788	788		
	X6640312	CHAIN LINK GATES TO BE REMOVED AND RE-ERECTED	EACH	2	2		
	X6650202	WOVEN WIRE FENCE REMOVAL	FOOT	972	972		
	X7010216	TRAFFIC CONTROL AND PROTECTION, (SPECIAL)	L SUM	1	1		
	X7010805	TRAFFIC CONTROL AND PROTECTION, STANDARD 701401 (SPECIAL)	L SUM	1	1		
	X7011800	TRAFFIC CONTROL AND PROTECTION, STANDARD BLR 21	L SUM	1	1		
*	X7830070	GROOVING FOR RECESSED PAVEMENT MARKING 5"	FOOT	4800	4800		
*	X7830074	GROOVING FOR RECESSED PAVEMENT MARKING 7"	FOOT	600	600		
	Z0005216	HOT-MIX ASPHALT STABILIZATION 6" AT STEEL PLATE BEAM GUARD RAIL	SQ YD	342	342		
	Z0007601	BUILDING REMOVAL NO. 1	L SUM	1	1		
	Z0013797	STABILIZED CONSTRUCTION ENTRANCE	SQ YD	247	247		
	Z0013798	CONSTRUCTION LAYOUT	L SUM	1	1		

* SPECIALTY ITEM

*= SPECIALTY ITEM

FILE NAME = c:\pw_work\pwidot\fergusonjh\d0318968\D366C59-sht-S00.dgn	USER NAME = fergusonjh	DESIGNED -	REVISED -
		DRAWN -	REVISED -
	PLOT SCALE = 100.0000 ' / in.	CHECKED -	REVISED -
	PLOT DATE = 10/21/2019	DATE -	REVISED -

STATE OF ILLINOIS
DEPARTMENT OF TRANSPORTATION

SUMMARY OF QUANTITIES

SCALE: | SHEET OF SHEETS | STA. TO STA.

F.A.I. RTE.	SECTION	COUNTY	TOTAL SHEETS	SHEET NO.
80	(50-3)HBR-3	LASALLE	137	13

CONTRACT NO. 66C59

ILLINOIS FED. AID PROJECT

REV. 11/19/19

	CODE NO.	ITEM	UNIT	TOTAL QUANTITY	CONSTRUCTION CODE NHPP FUNDS 90%FED/10%STATE ROADWAY 0004 RURAL	NHPP FUNDS 90%FED/10%STATE BRIDGE 0010 050-0261	CI FUNDS 100% STATE ROADWAY 0004 RURAL
*	Z0016702	DETOUR SIGNING	L SUM	1	1		
	Z0018002	DRAINAGE SCUPPERS, DS-11	EACH	2		2	
	Z0030850	TEMPORARY INFORMATION SIGNING	SQ FT	42	42		
Ø	Z0076600	TRAINEES	HOUR	2000	2000		
	Z0033700	LONGITUDINAL JOINT SEALANT	FOOT	2137	2137		
Ø	Z0076604	TRAINEES - TRAINING PROGRAM GRADUATE	HOUR	2000	2000		
	Z0046304	PIPE UNDERDRAINS FOR STRUCTURES 4"	FOOT	151		151	

*= SPECIALTY ITEM

* SPECIALTY ITEM Ø 0042

FILE NAME =	USER NAME = fergusonjh	DESIGNED -	REVISED -
c:\pw_work\pwidot\fergusonjh\d0318968\D366C59-sht-S00.dgn		DRAWN -	REVISED -
	PLOT SCALE = 100.0000 ' / in.	CHECKED -	REVISED -
	PLOT DATE = 10/21/2019	DATE -	REVISED -

STATE OF ILLINOIS
DEPARTMENT OF TRANSPORTATION

SUMMARY OF QUANTITIES

SCALE: SHEET OF SHEETS STA. TO STA.

F.A.I. RTE.	SECTION	COUNTY	TOTAL SHEETS	SHEET NO.
80	(50-3)HBR-3	LASALLE	137	14
		CONTRACT NO. 66C59		
	ILLINOIS	FED. AID PROJECT		

REV. 12/03/19 REV. 11/19/19

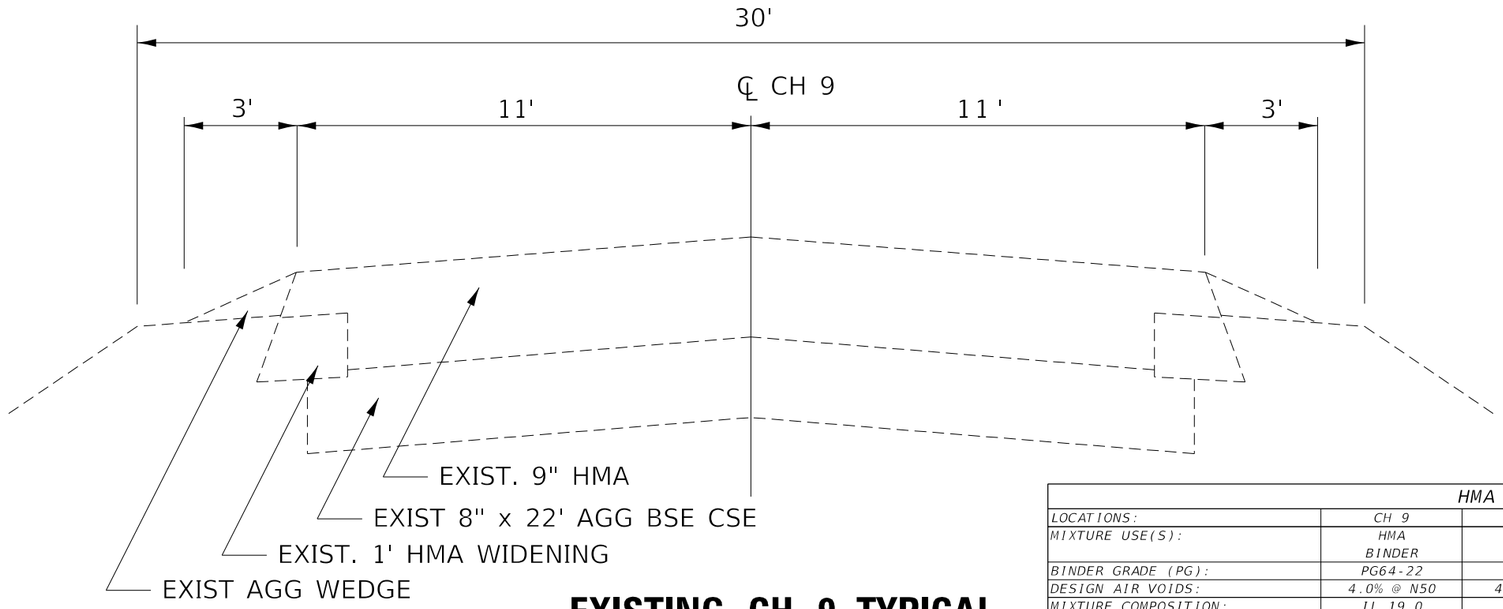

EXISTING CH 9 TYPICAL

HMA MIXTURE REQUIREMENT TABLE						
LOCATIONS:	CH 9	CH 9	I-80	ENTIRE PROJECT	ENTIRE PROJECT	ENTIRE PROJECT
MIXTURE USE(S):	HMA BINDER	HMA SURFACE	HMA SURFACE	HMA STABIL. AT GUARDRAIL 6"	HMA INCIDENTAL	HMA SHOULDER 6"
BINDER GRADE (PG):	PG64-22	PG64-22	SBS PG70-28	PG 64-22	PG 64-22	PG 64-22
DESIGN AIR VOIDS:	4.0% @ N50	4.0% @ N50	4.0% @ N90	4.0% @ N50	4.0% @ N50	4.0% @ N50
MIXTURE COMPOSITION: (MIXTURE GRADATION)	IL 19.0	IL 9.5	IL 9.5	IL 19.0	IL 9.5	IL 19.0
FRICTION AGGREGATE:		MIXTURE C	MIXTURE D		MIXTURE C	
MIXTURE WEIGHT:	112.0 LB/SY/IN	112.0 LB/SY/IN	112.0 LB/SY/IN	112.0 LB/SY/IN	112.0 LB/SY/IN	112.0 LB/SY/IN
QUALITY MANAGEMENT PROGRAM:	QCQA	QCQA	QCQA	QCQA	QCQA	QCQA
SUBLOT SIZE:	NA	NA	NA	NA	NA	NA
DENSITY TEST METHOD:	CORES	CORES	CORES	SATISFACTION OF ENGINEER	SATISFACTION OF ENGINEER	SATISFACTION OF ENGINEER

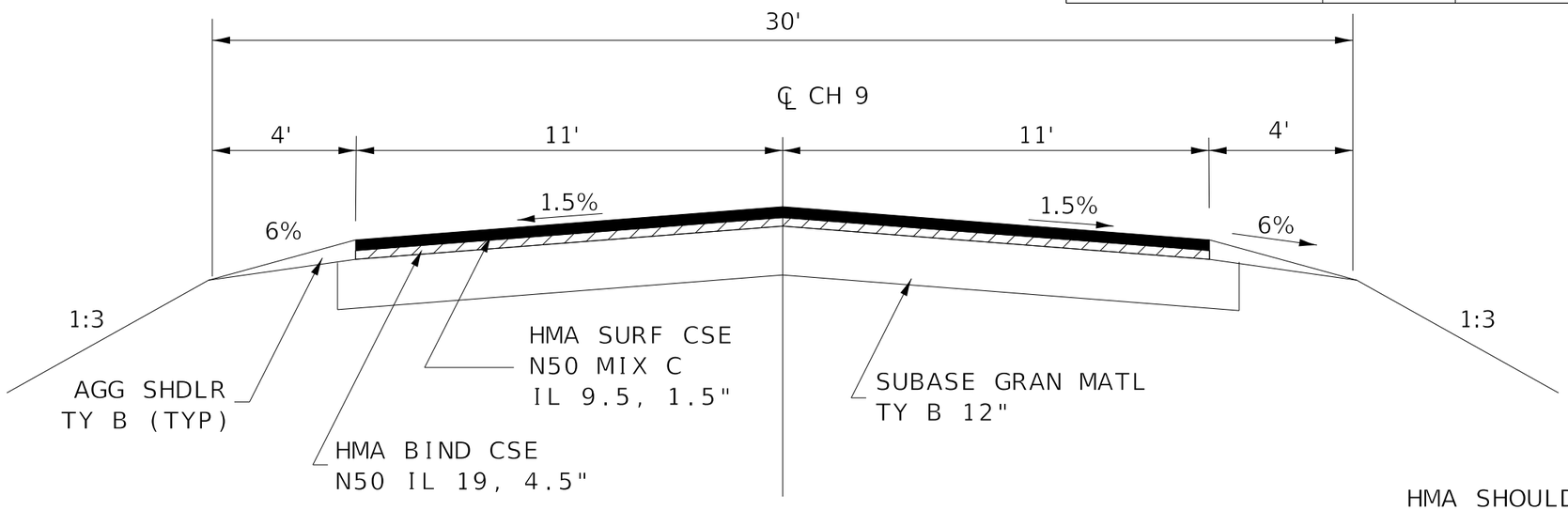

PROPOSED CH 9 TYPICAL

NOTES:
MAX SUPERELEVATION - 4%

AREAS WITH GUARDRAIL (LT & RT)

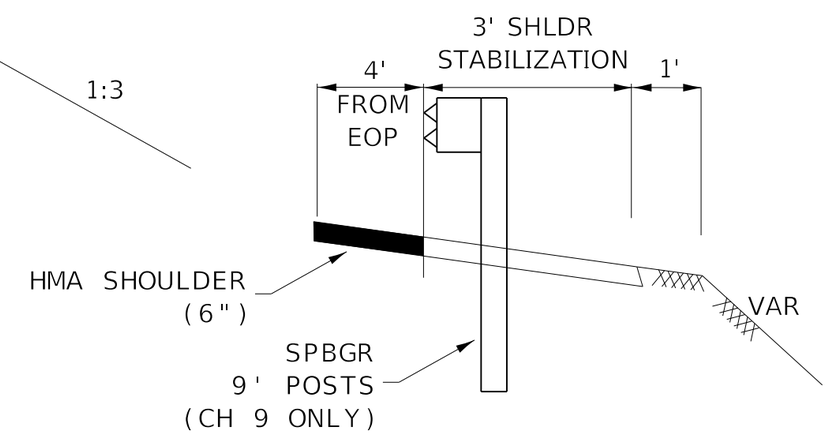

FILE NAME = c:\pw_work\pwidot\fergusonjh\d0318968\D366C59-sht-typical.dgn	USER NAME = fergusonjh	DESIGNED -	REVISED -
		DRAWN -	REVISED -
	PLOT SCALE = 100.0000 ' / in.	CHECKED -	REVISED -
	PLOT DATE = 10/21/2019	DATE -	REVISED -

STATE OF ILLINOIS
DEPARTMENT OF TRANSPORTATION

TYPICAL SECTIONS

SCALE: | SHEET OF SHEETS | STA. TO STA.

F.A.I. RTE.	SECTION	COUNTY	TOTAL SHEETS	SHEET NO.
80	(50-3)HBR-3	LASALLE	137	15

CONTRACT NO. 66C59

ILLINOIS FED. AID PROJECT

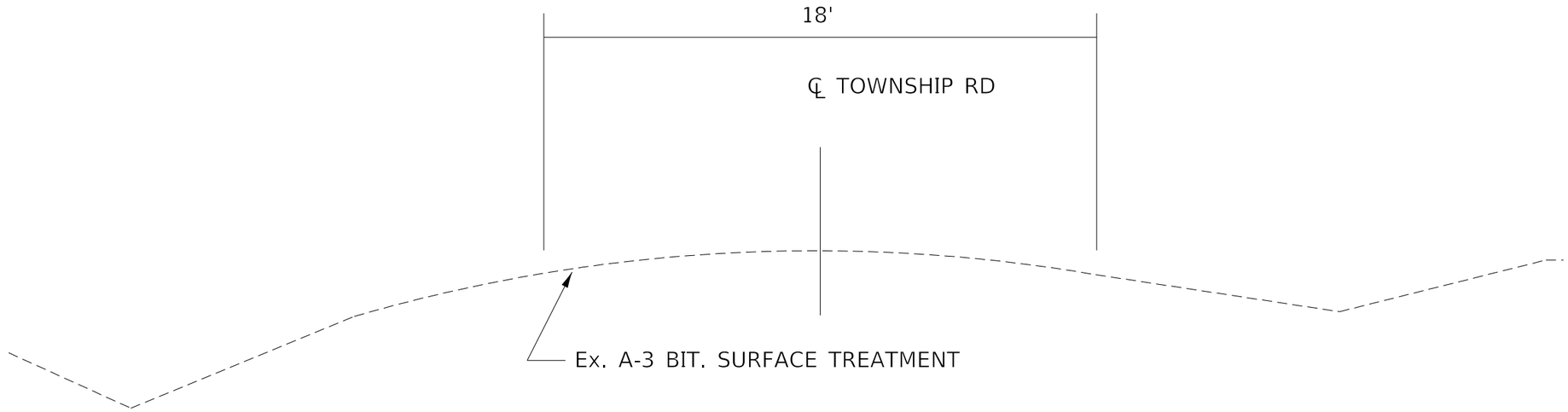

EXISTING TR 289 TYPICAL (N 30TH RD)

PROPOSED TR 289 TYPICAL (N 30TH RD)

NOTES:
MAX SUPERELEVATION - 4%

FILE NAME = c:\pw_work\pwidot\fergusonjh\d0318968\D366C59-sht-typical.dgn	USER NAME = fergusonjh	DESIGNED -	REVISED -	STATE OF ILLINOIS DEPARTMENT OF TRANSPORTATION	TYPICAL SECTIONS	F.A.I. RTE.	SECTION	COUNTY	TOTAL SHEETS	SHEET NO.
		DRAWN -	REVISED -			80	(50-3)HBR-3	LASALLE	137	16
	PLOT SCALE = 100.0000 ' / in.	CHECKED -	REVISED -					CONTRACT NO. 66C59		
	PLOT DATE = 10/21/2019	DATE -	REVISED -		SCALE: SHEET OF SHEETS STA. TO STA.		ILLINOIS FED. AID PROJECT			

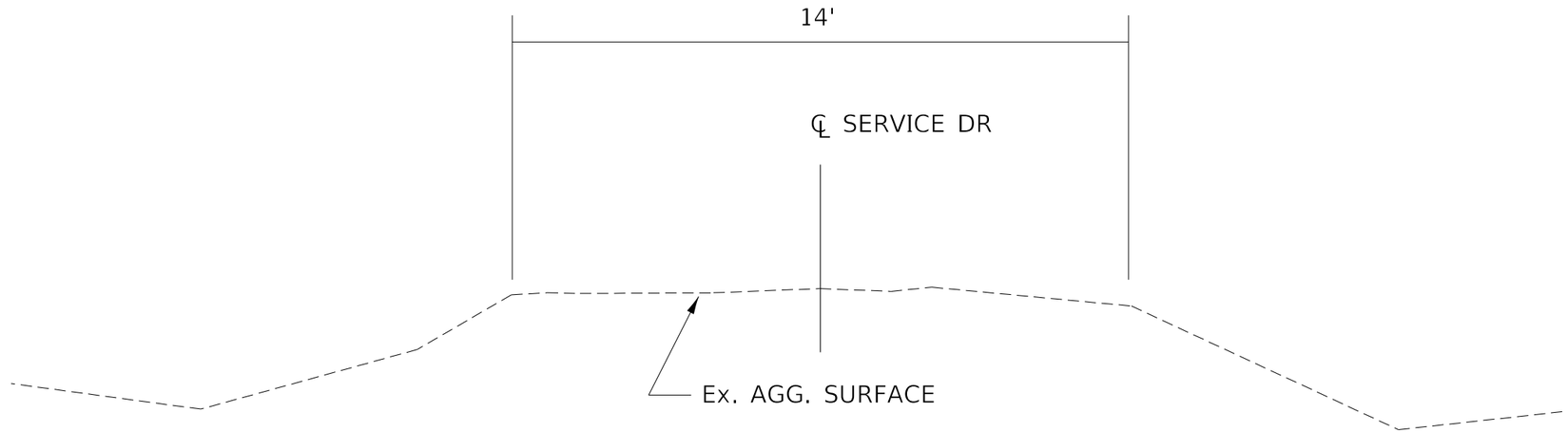

EXISTING FR 12.20 TYPICAL

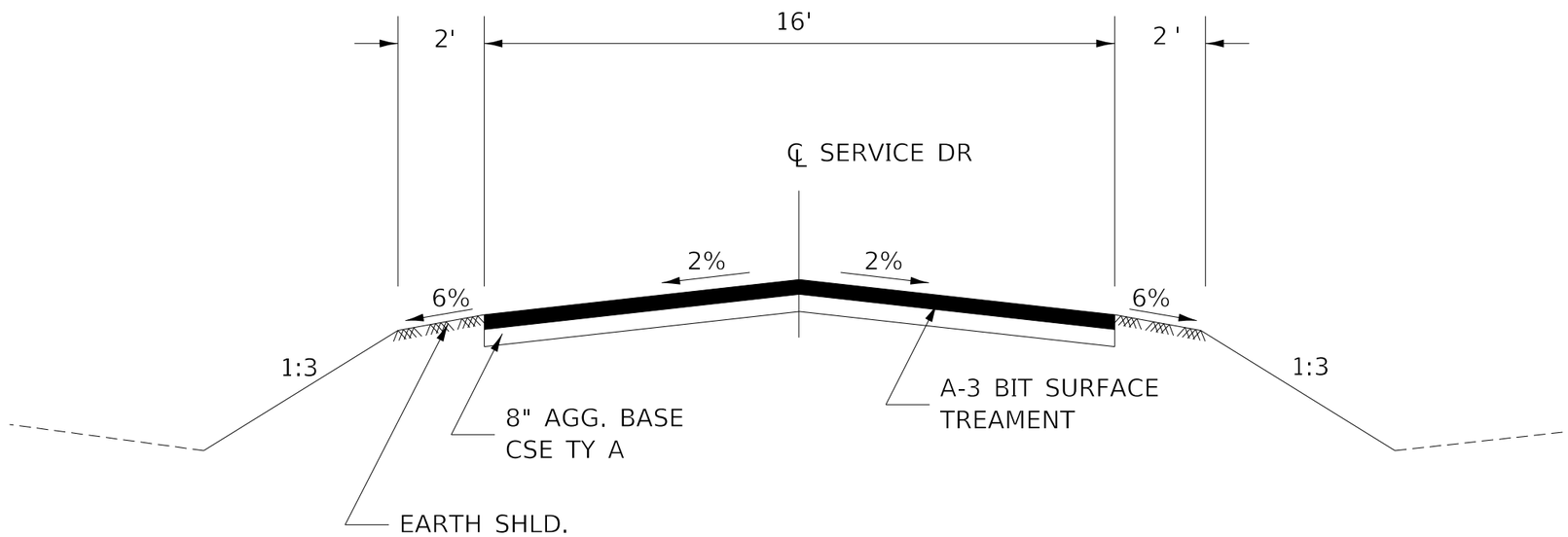

PROPOSED FR 12.20 TYPICAL

Notes:
Max Superelevation - 4%

FILE NAME = c:\pw_work\pwidot\fergusonjh\d0318968\D366C59-sht-typical.dgn	USER NAME = fergusonjh	DESIGNED -	REVISED -	STATE OF ILLINOIS DEPARTMENT OF TRANSPORTATION	TYPICAL SECTIONS			F.A.I. RTE.	SECTION	COUNTY	TOTAL SHEETS	SHEET NO.
		DRAWN -	REVISED -					80	(50-3)HBR-3	LASALLE	137	17
	PLOT SCALE = 100.0000 ' / in.	CHECKED -	REVISED -					CONTRACT NO. 66C59				
	PLOT DATE = 10/21/2019	DATE -	REVISED -		SCALE:	SHEET OF SHEETS	STA. TO STA.	ILLINOIS FED. AID PROJECT				

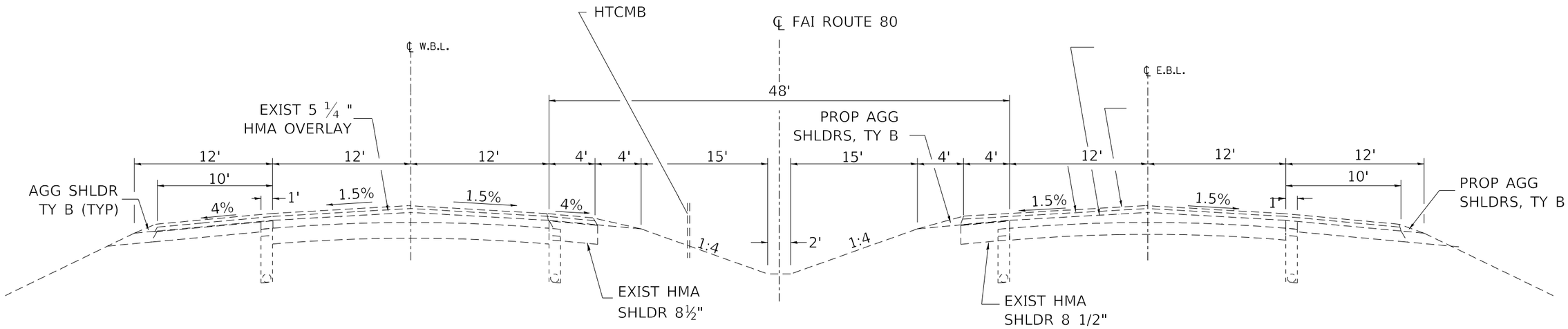

EXISTING TYPICAL SECTION (I–80)

(LOOKING EAST)

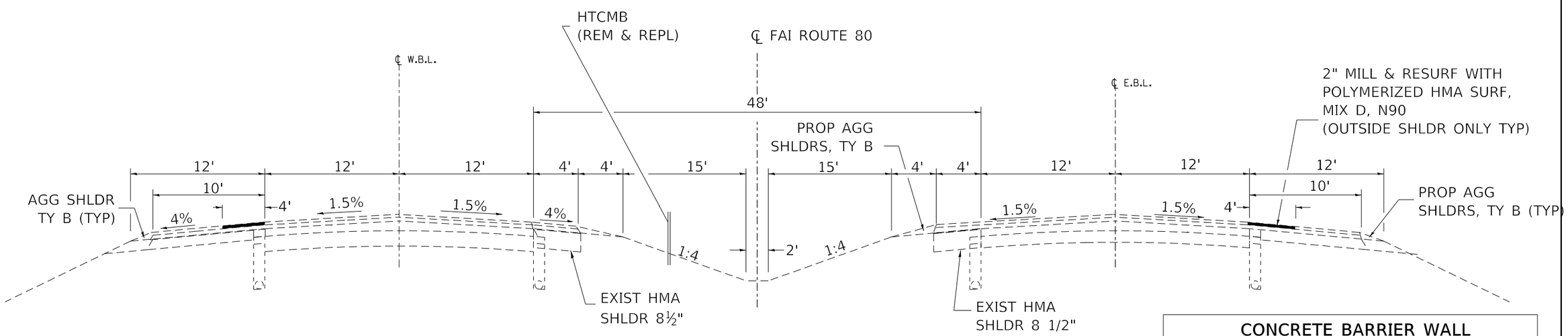

PROPOSED TYPICAL SECTION (I–80)

(LOOKING EAST)

CONCRETE BARRIER WALL

STA 210+59 TO 211+19

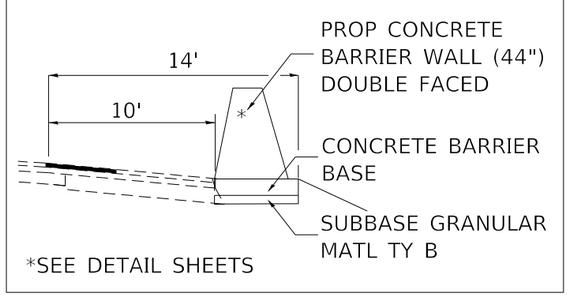

FILE NAME = c:\pw_work\pwidot\fergusonjh\d0318968\D366C59-sht-typical.dgn	USER NAME = fergusonjh	DESIGNED -	REVISED -	STATE OF ILLINOIS DEPARTMENT OF TRANSPORTATION	TYPICAL SECTIONS	F.A.I. RTE.	SECTION	COUNTY	TOTAL SHEETS	SHEET NO.
		DRAWN -	REVISED -			80	(50-3)HBR-3	LASALLE	137	18
	PLOT SCALE = 100.0000 ' / in.	CHECKED -	REVISED -					CONTRACT NO. 66C59		
	PLOT DATE = 10/21/2019	DATE -	REVISED -		SCALE: SHEET OF SHEETS STA. TO STA.		ILLINOIS FED. AID PROJECT			

MAINLINE SCHEDULE

LOCATION			LENGTH	AREA	SUBBASE GRAN MATL TY B 12"	HMA BIND CSE N50 IL 19	HMA SURF CSE N50 MIX C IL 9.5 (1.5")	POLY HMA SURF MIX D N90 (EB/WB)*	HMA SHLDR 6" **	BIT MATL TACK COAT	LONG JOINT SEAL	AGG SHLDR TY B	AGG SHLDR WEDGE TY B	PAVT CONN FOR BRIDGE APPROACH SLAB (PCC)	PROTEC COAT	WELDED WIRE REINFOR
			FOOT	SQ YD	SQ YD	TON	TON	TON	SQ YD	POUND	FOOT	TON	TON	SQ YD	SQ YD	SQ YD
CH 9																
102+50.00	TO	113+35.83	1085.83	2,654	2,654.3	668.9	223		194.5	1,922.9	1,086	329.77				
113+35.83	TO	113+50.83	15.0	46.7	37.3	8.4				16.8				46.7	49.9	37.3
116+34.16	TO	116+49.16	15.0	46.7	37.3	8.4				16.8				46.7	49.9	37.3
116+49.16	TO	127+00.00	1050.84	2,569	2,568.7	647.3	216		82.5	1,789.6	1,051	319.14				
INTERSTATE 80				EB & WB												
205+00.00	TO	209+50.00	450.00	400				44.8		180.0						
209+50.00	TO	211+50.00	200.00	178				19.9		80.0			13			
211+50.00	TO	217+00.00	550.00	489				54.8		220.0						
TOTAL					5,298	1,333	439	120	277	4,226	2,137	649	13	93	100	75

NOTES:
*RESURFACING AT I-80 OUTSIDE SHOULDERS FOR STAGING
** ADJACENT TO PROPOSED GUARDRAIL AREAS ON CH 9

SIDEROAD & ENTRANCE SCHEDULE

			FACILITY TYPE	LENGTH	PROP MATL	AREA	INC HMA SURF (1.5")	AGG SURF CSE TY B	BIT MATL TACK COAT	AGG BASE CSE TY A 8"	A-3 BITUMINOUS SURFACE TREATMENT* BIT MATL PRIME CT (1 APP)	BIT MATL COVER & SEAL CT **	COVER COAT AGG (2 APPS)	SEAL COAT AGG (1 APP)
				FOOT		SQ YD	TON	TON	POUND	SQ YD	TON	TON	TON	TON
TR 289 (N 30TH RD)														
100+00.00	TO	101+49.00	SR	149.00	A-3	701.44				725.3	1.1	3.1	14.0	7.0
101+49.00	TO	111+00.00	SR	951.00	A-3	1902.00				2,008	3.0	8.5	38.0	19.0
102+79 (IDOT EAST BLDG)			CE	274.00	HMA	1219.27	102.4		548.7					
106+37.66 (IDOT DRILL RIG BLDG)			CE	102.00	AGG	493.11		224.6						
SERVICE RD (F.R 12.20)														
0+00.00	TO	1+29.00	SR	129.00	A-3	506.04				525.4	0.8	2.3	10.1	5.1
1+29.00	TO	8+00.00	SR	671.00	A-3	1192.89				1,267	1.9	5.3	23.9	11.9
CH 9														
125+00 (LT)			FE	-	AGG	970.44		40.2						
TOTAL							102	265	549	4,526	6.8	19.2	86.0	43.0

*THE ENGINEER IS TO DETERMINE ACTUAL APPLICATION RATES AND DENSITIES FOR FINAL QUANTITIES.
** 2 APPLICATIONS OF COVER COAT AND 1 APPLICATION OF SEAL COAT AS PER ART 403 OF THE STANDARD SPECIFICATIONS
AGGREGATE SURFACE CSE TY B QTY BASED ON AN 8" THICK ENTRANCE
DENSITIES USED TO OBTAIN WEIGHT (ESTIMATES ONLY):
- PRIME COAT - 8.5 LB/GAL & 0.00159 TON/SY
- BIT MATL (COVER & SEAL) - 8.5 LB/GAL & 0.00446 TON/SY
- COVER AGG & SEAL AGG - 0.01 TON/SY/APPLICATION

CONTRACT NO. 66C59

RTE. I-80 LOCATION: CH 9 OVER I-80, 4 MILES EAST OF ILL 178 LASALLE COUNTY

GPS NUMBER	DESCRIPTION	EXISTING MONUMENT TYPE	PROPOSED MONUMENT TYPE	MONUMENT RECORD TO BE RECORDED	RESPONSIBILITY
800081	NW CORNER SECTION 1, T33N, R3E, OF THE 3RD PM	PIN	TYPE 1	YES	1

THE COORDINATE OF THE LISTED MONUMENT IS KNOWN. PRE CONSTRUCTION TIES BY THE R.E. ARE NOT REQUIRED.
R.E. MUST TIE AND BRING TO THE ATTENTION OF THE PLATS AND PLANS MANAGER ANY ADDITIONAL UNLISTED MONUMENTS FOUND.
UPON PAVING COMPLETION, R.E. WILL DIRECT THE PLATS AND PLANS MANAGER TO STAKE THE LOCATION FOR TYPE 1 MONUMENT CORING.
PLATS AND PLANS WILL PREPARE AND RECORD THE REQUIRED MONUMENT RECORD.

RESPONSIBILITY:
1: RESIDENT TO RE-ESTABLISH MONUMENT (PAY ITEM REQUIRED. PERMANENT SURVEY MARKER, TYPE 1)
2: PLATS AND PLANS TO RE-ESTABLISH MONUMENT

IDOT MAINTENANCE BUILDING SCHEDULE

LOCATION	AREA	HMA SURF REMOVAL 1 1/2"	INC HMA SURF (1.5")	BIT MATL TACK COAT	PAINT PAVEMENT MARKING 4" (PARKING)
	SQ FT	SQ YD	TON	POUND	FOOT
EAST BUILDING	21,210.0	2,356.7	198.0	1,060.5	404
SERVICE RD (UNDER STRUCTURE)	2,424.0	269.3	22.6	121.2	
WEST BUILDING	13,468.0	1,496.4	125.7	673.4	
TOTALS		4,122	346	1,855	404

NOTE: SEE LOCATIONS IN PLAN DETAILS
ALL ITEMS IN THIS SCHEDULE TO BE USED UNDER CI FUNDS

PERMANENT PAVEMENT MARKING

			LENGTH	PAINT PAVT MARKING (2 APPS)		POLYUREA TY 2 4"	PREF PLASTIC TY D 6"	GROOVING FOR RECESSED PAVT MARKING		RAISED REFL PAVT MARKING (CRYSTAL)		SHLDR RUMBLE STRIPS 16"
				4W EOP	4Y NP			5"	7"	REMOVAL	INSTALL	(NB/SB)
			FOOT	FOOT	FOOT	FOOT	FOOT	FOOT	FOOT	EACH	EACH	FOOT
CH 9												
102+50.00	TO	127+00.00	2,450	9,800	9,800							
TR 289												
100+00.00	TO	111+00.00	1,100	4,400								
SERVICE RD (F.R 12.20)												
0+00.00	TO	8+00.00	800	3,200								
INTERSTATE 80												
205+00.00	TO	217+00.00	1,200			4,800	600	4,800	600	34	34	4,800
TOTAL				27,200		4,800	600	4,800	600	34	34	4,800

EARTHWORK SCHEDULE

LOCATION		EARTH EXCAVATION (CUT)	EARTH EXCAVATION ADJ FOR SHRINKAGE (25%)	EMBANKMENT (FILL)	EARTHWORK* BALANCE WASTE (+) OR SHORTAGE (-)
FROM	TO	CU YD	CU YD	CU YD	CU YD
CH 9					
102+50.00	114+50.00	2,471.5	1,853.7	32,974.0	-31,120.3
116+00.00	128+75.00	3,563.8	2,672.9	33,602.0	-30,929.2
TOTALS		6,035	4,527	66,576	-62,049

* PAID AS FURNISHED EXCAVATION
QUANTITIES INCLUDE SIDEROADS TR 289, FR 12.20, AND PROPOSED DITCH ON TR 289

ROADWAY REMOVAL SCHEDULE

LOCATION			LENGTH	PAVT REMOVAL	GUARDRAIL REM	PIPE CULVERT REMOVAL	DRIVEWAY PAVT REM	SEAL ABANDONED WATER WELL	BLDG REM # 1	REMOV ATTEN BASE	REMOVE & REINSTALL HTCMB ***
			FOOT	SQ YD	FOOT	FOOT	SQ YD	EACH	L SUM	EACH	FOOT
CH-9 (EXIST STATIONS)											
4+00.0	TO	13+80.0	980.0	2,395.6							
9+00.0	TO	13+80.0	-		1,078						
16+00.0	TO	20+67.0	-		1,050						
25+16 (FE)			-			40					
11+76 (70' LT)			-					1	1		
14+69 (40 RT)						45					
TR 289 (30TH RD - EXIST STATIONS)											
100+00.00	TO	110+66.00	1066.0	2,298.3							
102+40 (LT)**						63	725.5				
106+00.00						47					
SERVICE RD FR 12.20 (STA 18+39 - EXIST STATIONS)											
0+00.00	TO	0+59.00	59.0	187.0							
0+59.00	TO	5+85.00	526.0	SEE NOTES*							
1+00 (X-ROAD)			-			80					
I-80											
210+00.00	TO	211+00.00	-							2	
209+50.00	TO	213+41.00	391.0	176.4	397						391
TOTALS				5,057	2,525	275	726	1	1	2	391

*COST OF THE REMOVAL OF AGGREGATE ROAD ON FR 12.20 SHALL BE INCLUDED IN THE COST OF EARTH EXCAVATION AND SUITABLE AGGREGATE MAY BE INCORPORATED IN THE EMBANKMENT (LOWER LIFTS) AT THE DISCRETION OF THE ENGINEER AS PER ART 202.03
**IDOT BLDG EAST: REMOVAL AREA INCLUDES PARKING LOT AREA BEHIND PROPOSED FENCE AND EXIST DRIVEWAY (SEE DETAILS IN PLANS)
*** TEMP REMOVAL & REINSTALLATION AREAS OF HTMCB & POSTS WILL ONLY BE ADJUSTED BY THE ENGINEER.
HTCMB RUN IS CURRENTLY 2.5 MILES (BETWEEN MAINTENANCE CROSSOVERS)

FENCE SCHEDULE

LOCATION*			SIDE	CHAIN LINK FENCE REMOVAL (SPL)	CHAIN LINK FENCE (SPL)	CHAIN LINK GATES TO BE REMOVED & RE-ERECTED	WOVEN WIRE FENCE REMOVAL	WOVEN WIRE FENCE 4'
				FOOT	FOOT	EACH	FOOT	FOOT
CH-9 (PROP STATIONS)								
0+01.0	TO	112+24.0	LT	222				
111+10.0	TO	112+24.0	LT		116		186	
112+21.0	TO	113+90.0	RT	491	479	1		
(EAST IDOT BLDG WEST AND SOUTH PERIMETER)								
114+43.0	TO	114+43.0	LT/RT	75	75	1		
116+09.0	TO	116+09.0	LT/RT				216	216
TR 289 (30TH RD - EXIST STATIONS)								
101+50	TO	106+00.00	LT					533
SERVICE RD FR 12.20 (PROP STATIONS)								
0+49.00	TO	6+55.00	LT				570	696
0+51.00	TO	7+51.00	LT					
TOTALS				788	670	2	972	1,445

* SEE PLAN DETAILS FOR LAYOUT.
REMOVAL QUANTITIES MAY VARY

STAGING SCHEDULE

FROM		TO	LENGTH	TEMPORARY CONCRETE BARRIER		IMPACT ATTENUATOR SEVERE USE NARROW TEST LEVEL 3		TEMPORARY PAVEMENT MARKING (2 APPS)		PAVT MARK REM WATER BLAST (2 APPS)	HMA SURF REM 2" * SHLDR	AGG FOR TEMP ACCESS **
				INSTALL	RELOCATE	TEMP	RELOCATE	4"	6"			
			FOOT	FOOT	FOOT	EACH	EACH	FOOT	FOOT	SQ FT	SQ YD	TON
STAGE 1 (I-80)												
210+37.50		212+00.00	162.5	162.5		1						
209+82.50		211+45.00	162.5	162.5		1						
102+79 (IDOT BLDG)												244.1
10637 (DRILL RIG BLDG)												163.4
FR 12.20 (RELOCATED)			1,480.0									1,204.6
STAGE 2 (I-80)												
210+37.50		212+00.00	162.5		162.5		1					
209+82.50		211+45.00	162.5		162.5		1					
206+50.00		215+12.00	862.0					10,344	862	3,844.5		
205+00.00		217+00.00	1,200.0								1,066.7	
TOTALS				325.0	325.0	2	2	10,344	862	3,845	1,067	1,612

* REFER TO MAINLE SCHED FOR HMA RESURFACING MIX TYPE
** ESTIMATES BASED ON 8" DEEP ENTRANCE.
CONTRACTOR'S OPERATIONS SHALL ALLOW ALL BUILDINGS ACCESS TO THE EXISTING OR PROPOSED ROADWAY AT ANY TIME

GUARDRAIL & BARRIER WALL SCHEDULE

LOCATION FROM		TO	DIRECTION	REQ'D LENGTH OF NEED	TRAFF BARR TERM TY 6	TBT TY 1 (SPL) TANGENT	SPBGR TY A 6-FT POST	SPBGR TY A 9-FT POST	HMA STAB AT SPBGR 6"	GR REFL TY A	TERM MARKER DIRECT APPLIED	CONC BARR DLB FACED 44"	CONC BARR BASE	PROTECT COAT	AGG SHLDR REM	EARTH EX (WIDEN)	LIN DEL PANEL 6"	LIN DEL PANEL 4"
				FOOT	EACH	EACH	FOOT	FOOT	SQ YD	EACH	EACH	FOOT	FOOT	SQ YD	CU YD	CU YD	EACH	EACH
CH 9 (PROPOSED)																		
111+12.50		113+50.00	SB-DEPART	225.0	1	1		150.0	97.6	3	1							2
111+37.50		113+50.00	NB-APPR	200.0	1	1		125.0	89.3	4	1							2
116+34.00		117+21.50	SB-APPR	75.0	1	1			47.6	3	1							2
116+34.00		117+46.50	NB-DEPART	100.0	1	1		25.0	55.9	4	1							2
EAST PARAPET (050-0261)			-														2	
WEST PARAPET (050-0261)			-														2	
I-80																		
209+21.50		210+59.00	EB-APPR	125.0	1	1	50.0		52	3	1							2
210+59.00		211+19.00	EB-APPR									60	60	59.4	1.4	1.5		
TOTALS				725.0	5	5	50	300	342	17	5	60	60	59	1.4	1.5	4	10

REINFORCEMENT AND TIEBARS ARE INCLUDED IN THE COST OF THE CONCRETE BARRIER BASE
FOR SPACING OF GUARDRAIL REFLECTORS SEE HWY STND 782006
SEE SP FOR LIN DELINATOR PANEL (4")
SEE SP FOR LIN DELINATOR PANEL (6")

RIGHT-OF-WAY MARKER SCHEDULE

LOCATION			FURNISHING & ERECTING ROW MARKERS *	RE-ERECTING ROW MARKERS
STA	O/S	SIDE	EACH	EACH
CH-9 STATIONS (PROP)				
104+00.00	30'	LT	1	
104+00.00	30'	RT	1	
107+50.00	45'	RT	1	
107+50.00	50'	LT	1	
108+75.00	65'	RT	1	
111+55.41	124.34'	LT	1	
110+46.00	54'	LT		1
110+52.00	35'	RT		1
111+33.00	98'	RT		1
111+97.00	447'	RT		1
118+44.17	123.65'	LT	1	
121+50.00	75'	RT	1	
120+02.52	290.78'	RT	1	
125+75.00	35'	LT	1	
125+75.00	35'	RT	1	
I-80 STATIONS (EXIST)				
216+30.00	150'	LT	1	
217+25.00	365'	RT	1	
219+75.00	313'	RT	1	
TOTALS			14	4

* QUANTITIES WILL BE ADJUSTED IF EXISTING ROW MARKERS CANNOT BE REUSED AND RE-ERECTED DUE TO DAMAGE OTHER THAN CONTRACTOR'S ACTIVITIES.

IMPACT ATTENUATOR SCHEDULE

LOCATION	IMPACT ATTNR (N-R) TEST LVL 3 SPECIAL	ATTENUATOR BASE	GRADE & SHAPE DITCHES
	EACH	SQ YD	FOOT
I-80			
210+95.60	2	62	
210+00.00 212+00.00			200
TOTALS	2	62	200

DRAINAGE SCHEDULE

	ITEM No.	SIDE	GRADE	LENGTH	INVERT U/S	INVERT D/S	PIPE CULV CL D TY 1 18"	METAL FLARED END SEC 18"	PIPE CL A, TY1 EQRS 21"	PRC END STND 542011 EQRS 21" 1:3	TRAVERSABLE PIPE GRATE FOR END SECT	TRENCH BACKFILL	EXPL TRENCH (SPL)	TEMP PIPE CULV 18" CL D, TY1
			%	FOOT	DIM	DIM	FOOT	EACH	FOOT	EACH	FOOT	CU YD	FOOT	FOOT
TR 289														
106+12 TO 106+79	1	LT	0.30	67	630.42	630.22	69	2				8.1		
107+50 TO 107+50	2	X-RD	0.30	44	630.11	629.96			44	2	16.3	8.6		
106+00 TO 109+00		RT	-	-	-	-							500	
CH 9														
113+68 TO 114+26	3	RT	0.30	61	630.04	629.85	61	2				10.9		
119+60 TO 120+98	4	RT	0.30	138	628.47	628.06	137	2				71.5		
124+50 TO 126+50	5	RT	VAR	200	FIELD ADJUST							-		200
124+80 TO 125+50	6	LT	0.30	70	627.59	627.38	70	2				3.9		
TOTAL							337	8	44	2	16	103	500	200

NOTES:
EXPLORATORY TRENCH TO DISCOVER A BROKEN OR PLUGGED FIELD TILE
ALL FOUND FIELD TILES WILL BE RECORDED IN THE AS-BUILT PLANS
SEE STNDS 542311, 542011 FOR ELLIPTICAL PIPE DIMENSIONS
TEMP PIPE CULVERT TO BE INSTALLED UNDER TEMP AGG ACCESS ROAD (SEE PLANS). PROPOSED LENGTHS MAY BE ADJUSTED.

TREE REMOVAL SCHEDULE

LOCATION			REMOVAL BY UNIT DIAMETER		TREE REMOVAL
			6 TO 15	OVER 15	
STA	O/S	SIDE	UNIT	UNIT	ACRE
CH-9 STATIONS (EXIST ALINGMENT)					
NE QUAD (SOUTH OF EXIST FR 12.20)					0.75
NE QUAD (NORTH OF EXIST FR 12.20)					0.59
09+97.00	43.0	RT	6		
09+98.00	46.0	RT	8		
10+03.00	43.0	RT	8		
10+09.00	44.0	RT	10		
10+19.00	42.0	RT	10		
10+18.00	47.0	RT	8		
10+23.00	52.0	RT	8		
10+27.00	53.0	RT	8		
10+37.00	52.0	RT	11		
10+38.00	48.0	RT	10		
10+41.00	55.0	RT	12		
10+47.00	43.0	RT	12		
10+48.00	57.0	RT	8		
10+49.00	56.0	RT	8		
10+51.00	48.0	RT	12		
10+53.00	57.0	RT	6		
10+54.00	67.0	RT		16	
10+62.00	50.0	RT	8		
10+63.00	60.0	RT	6		
10+63.00	75.0	RT	12		
10+69.00	58.0	RT	6		
10+66.00	79.0	RT	10		
10+71.00	66.0	RT	6		
10+71.00	76.0	RT	10		
10+79.00	60.0	RT	8		
10+81.00	48.0	RT	6		
10+80.00	28.0	RT	8		
10+84.00	82.0	RT		22	
10+86.00	62.0	RT	6		
10+86.00	69.0	RT		16	
10+83.00	83.0	RT		22	
10+90.00	73.0	RT		20	
10+91.00	86.0	RT	12		
10+96.00	81.0	RT	12		
10+98.00	82.0	RT		16	
10+91.00	86.0	RT	12		
10+95.00	89.0	RT		16	
11+09.00	99.0	RT	10		
11+16.00	75.0	RT	10		
11+17.00	114.0	RT	6		
11+29.00	75.0	RT	6		
11+31.00	133.0	RT	6		
11+92.00	442.0	RT	6		
12+89.00	34.0	RT	8		
12+90.00	37.0	RT	8		
12+95.00	40.0	RT	6		
12+99.00	34.0	RT	6		
13+10.00	40.0	RT	6		
13+58.00	42.0	RT	6		
13+65.00	38.0	RT	6		
13+74.00	44.0	RT	6		
13+95.00	31.0	RT	6		
16+50.00	33.0	RT	8		
16+89.00	33.0	RT	8		
18+00.00	41.0	LT	8		
18+13.00	46.0	LT	6		
18+13.00	48.0	LT	6		
18+52.00	40.0	LT	8		
18+55.00	45.0	LT	10		
18+57.00	42.0	LT	6		
19+24.00	33.0	LT	7		

TREE REMOVAL SCHEDULE

LOCATION			REMOVAL BY UNIT DIAMETER		TREE REMOVAL
			6 TO 15	OVER 15	
STA	O/S	SIDE	UNIT	UNIT	ACRE
19+24.00	33.0	LT	7		
19+41.00	35.0	LT	8		
19+45.00	42.0	LT	6		
19+57.00	32.0	LT	7		
19+58.00	33.0	LT	6		
I-80 STATIONS (EXIST ALINGMENT)					
211+78.60	97.0	LT		25	
212+50.60	99.0	LT	6		
213+07.60	95.0	LT	6		
214+36.60	92.0	LT	6		
215+12.60	90.0	LT		14	
TOTALS			488	167	1.25

* QUANTITIES ADJUSTED WHEN FIELD CONDITIONS VARY
ACRE QUANTITY ADJUSTED TO NEAREST 0.25 ACRE

ROAD SIGNS SCHEDULE

ITEM*	STA	O/S	SIGN TYPE	SIGN DESCRIPTION & DESIGNATION		SIZE	REMOVE SIGN PANEL TY 1	REMOVE & RELOCATE SIGN PANEL	REMOVE & RELOCATE SIGN PANEL & POLE ASSEMBLY	SIGN PANEL TY 1	WOOD SIGN SUPPORT
						L X W	SQ FT	EACH	EACH	SQ FT	FOOT
	CH 9 (EXIST STATIONS)										
1	17+75	LT	WARNING	SIDE ROAD	W2-2	36 x 36			1		
2	16+50	RT	REGULATORY	PASS WITH CARE	R4-2	24 x 30			1		
3	27+50	LT	REGULATORY	DO NOT PASS	R4-1	24 x 30			1		
4	12+00	RT	ST NAME (1 LINE)	N 30	D3-1	24 x 9			1		
			ST NAME (1 LINE)	E 12	D3-1	24 x 9					
			ST NAME (1 LINE)	N 30	D3-1	24 x 9					
			ST NAME (1 LINE)	E 12	D3-1	24 x 9					
	TR 289 (EXIST STATIONS)										
5	100+25	LT	REGULATORY	STOP	R1-1	36 x 36			1		
6	101+25	RT	REGULATORY	WEIGHT LIMIT 6 TONS	R12-1	18 x 24		1			13.5
7	110+00	LT	WARNING	STOP AHEAD	W3-1	30 x 30			1		
8	106+25	LT	ADDRESS	1211 N 30TH RD	-	12 x 18			1		
9	100+50	LT	REGULATORY	STATE PROPERTY NO TRESSPASSING	R15-I106	36 x 15		1			13.5
10	102+25	LT	REGULATORY	STOP	R1-1	30 x 30			1		
		LT	WARNING	LIGHT'S ON FOR SAFETY		24 x 15					
		LT	WARNING	VERTICAL PANEL (YELLOW/BLACK)	OM3-L	12 x 36	3.0			3.0	
11	102+80	LT	REGULATORY	BUCKLE UP IT'S THE LAW	-	12 x 30			1		
12	102+75	LT	WARNING	VERTICAL PANEL (YELLOW/BLACK)	OM3-R	12 x 36	3.0			3.0	
13	102+80	LT	CUSTOM	IDOT SPECIAL CREWS HEADQUARTERS	-	96 x 48			1		
	102+80	LT	REGULATORY	STATE PROPERTY NO TRESSPASSING	R15-I106	36 x 15	3.75			3.75	
14	102+85	LT	ADDRESS	1203 N 30TH RD	-	18 x 12			1		13.5
15	102+85	LT	ADDRESS	1205 N 30TH RD	-	18 x 12					
	FR 12.20 (EXIST STATIONS)										
16	0+25	RT	REGULATORY	STOP	R1-1	36 x 36			1		
17	0+15	RT	ADDRESS	3012 E 12TH RD	CUSTOM	18 x 12			1		
				TOTAL			10	2	13	10	41

* SEE PLANS AND PROFILE FOR PROPOSED LOCATIONS
PROPOSED SIGN LOCATIONS MAY BE ADJUSTED BY THE RESIDENT

LANDSCAPING SCHEDULE

LOCATION*	SIDE	EROSION CONTROL BLANKET	MULCH METHOD 2	FERTILIZER NUTRIENTS NITRO	PHOS	POT	SEED CL 4 *	SEED CL 3	SEED CL 2A
		SQ YD	ACRE	POUND	POUND	POUND	ACRE	ACRE	ACRE
CH-9									
102+50.0 TO 114+00.0	LT	3,634	0.15	68	68	68	0.15	0.75	
102+50.0 TO 109+00	RT	1,403		26	26	26		0.29	
111+00.0 TO 114+00.0	RT	2,278		42	42	42		0.47	
115+80.0 TO 127+00.0	LT	5,867		109	109	109		1.21	
115+80.0 TO 120+51.0 (AREA SOUTH OF TR 12.20)	RT	6,116	1.77	119	119	119	1.77	1.26	0.06
120+51.0 TO 127+00.0 (AREA NORTH OF TR 12.20)	RT	4,633	0.64	92	92	92	0.64	0.96	0.06
TR 289									
100+00.0 TO 111+00.0	RT	2,734		59	59	59		0.56	0.09
100+00.0 TO 102+79.0	LT	1,694	0.51	34	34	34	0.51	0.35	0.03
102+79.0 TO 106+37.0	LT	807	0.62	19	19	19	0.62	0.17	0.05
106+37.0 TO 111+00.0	LT	1,407	0.22	30	30	30	0.22	0.29	0.04
TOTALS		30,573	4	598	598	598	4	6.5	0.25

* FERTILIZER NOT REQUIRED AS PER ART 250.07
ACRE QUANTITITIES ROUNDED TO NEAREST 0.25 ACRE

EROSION CONTROL SCHEDULE

LOCATION*	SIDE	PERIMETER EROSION BARRIER	TEMP EROS CONTROL SEEDING	TEMP DITCH CHECKS *	INLET & PIPE PROTECT	STABILIZED CONST ENTRANCE **
		FOOT	POUND	FOOT	EACH	SQ YD
CH-9						
102+50.0 TO 114+00.0	LT	1,255	100	70		82.2
102+50.0 TO 109+00	RT	630	30	40		
111+00.0 TO 114+00.0	RT	246	50	30	2	
115+80.0 TO 127+00.0	LT	1,214	121	70	2	82.2
115+80.0 TO 120+51.0 (AREA SOUTH OF TR 12.20)	RT	495	304	80	1	
120+51.0 TO 127+00.0 (AREA NORTH OF TR 12.20)	RT		160	80	3	
TR 289						
100+00.0 TO 111+00.0	RT	1064	56	80	1	82.2
100+00.0 TO 102+79.0	LT	130	86	20	1	
102+79.0 TO 106+37.0	LT	281	79	10	1	
106+37.0 TO 111+00.0	LT	448	52	80	1	
TOTALS		5,763	1,038	560	12	247

* LENGTH OF DITCH CHECK - 10' (FOR ESTIMATING QTYS)
** LOCATION AND NUMBER OF ENTRANCES WILL BE ADJUSTED BY THE RESIDENT FOR AREAS OF INGRESS AND EGRESS

PROP. CURVE PR_CH9_3
PI STA. = 108+56.08
Δ = 2° 50' 16" (RT)
D = 1° 45' 08"
R = 3,270.00'
T = 80.99'
L = 161.95'
E = 1.00'
e = 4.0%
P.C. STA. = 107+75.09
P.T. STA. = 109+37.04

PROP. CURVE PR_CH9_6
PI STA. = 111+59.03
Δ = 2° 50' 16" (LT)
D = 1° 45' 08"
R = 3,270.00'
T = 80.99'
L = 161.95'
E = 1.00'
e = 4.0%
P.C. STA. = 110+78.04
P.T. STA. = 112+40.00

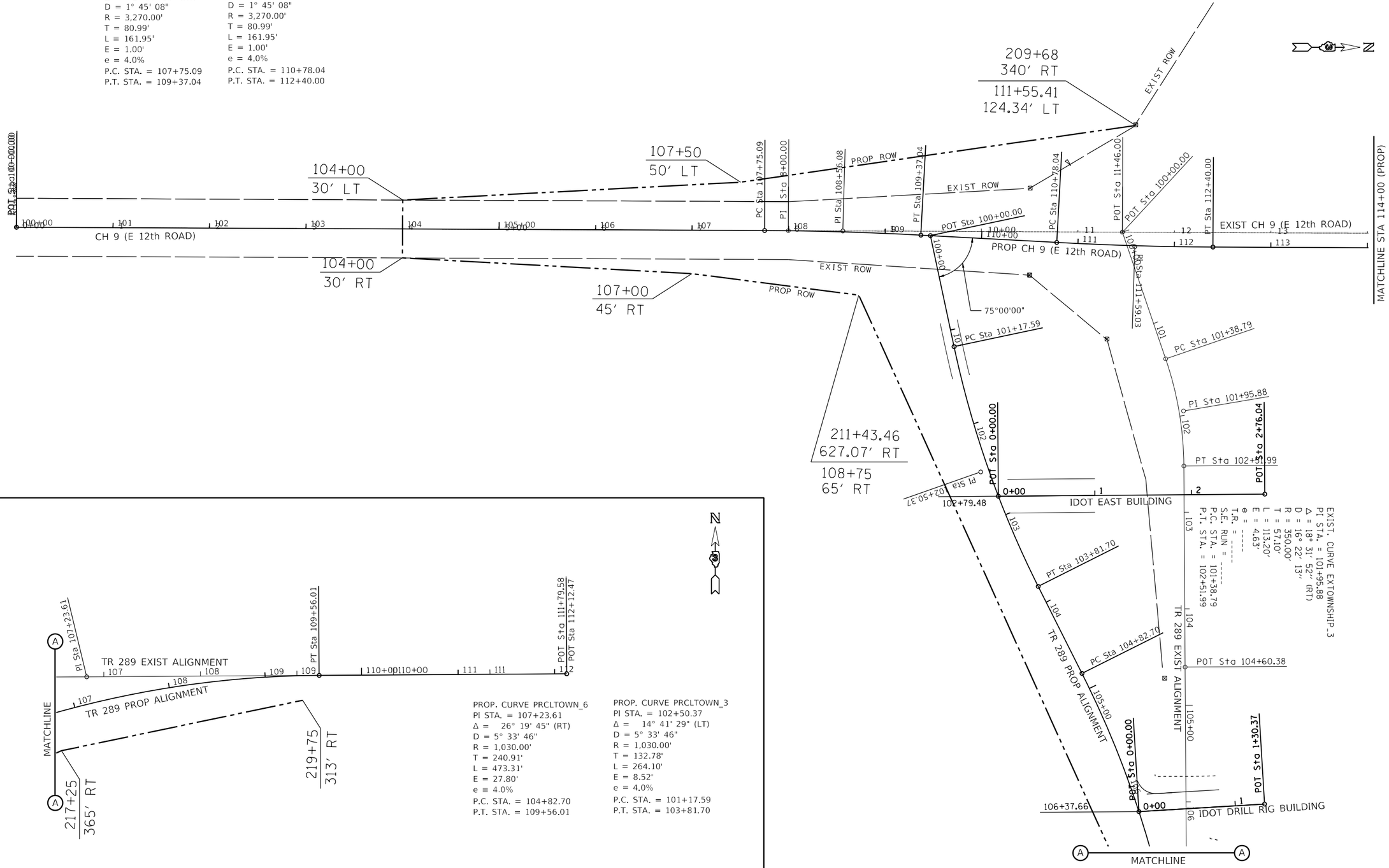

PROP. CURVE PRCLTOWN_6
PI STA. = 107+23.61
Δ = 26° 19' 45" (RT)
D = 5° 33' 46"
R = 1,030.00'
T = 240.91'
L = 473.31'
E = 27.80'
e = 4.0%
P.C. STA. = 104+82.70
P.T. STA. = 109+56.01

PROP. CURVE PRCLTOWN_3
PI STA. = 102+50.37
Δ = 14° 41' 29" (LT)
D = 5° 33' 46"
R = 1,030.00'
T = 132.78'
L = 264.10'
E = 8.52'
e = 4.0%
P.C. STA. = 101+17.59
P.T. STA. = 103+81.70

FILE NAME = c:\pw_work\pwidot\fergusonjh\d0318968\D366C59-sht-ATB.dgn	USER NAME = fergusonjh	DESIGNED -	REVISED -
	PLOT SCALE = 100.0000 ' / in.	DRAWN -	REVISED -
	PLOT DATE = 10/21/2019	CHECKED -	REVISED -
		DATE -	REVISED -

STATE OF ILLINOIS
DEPARTMENT OF TRANSPORTATION

ALIGNMENT

SCALE: SHEET OF SHEETS STA. TO STA.

F.A.I. RTE.	SECTION	COUNTY	TOTAL SHEETS	SHEET NO.
80	(50-3)HBR-3	LASALLE	137	25

CONTRACT NO. 66C59

ILLINOIS FED. AID PROJECT

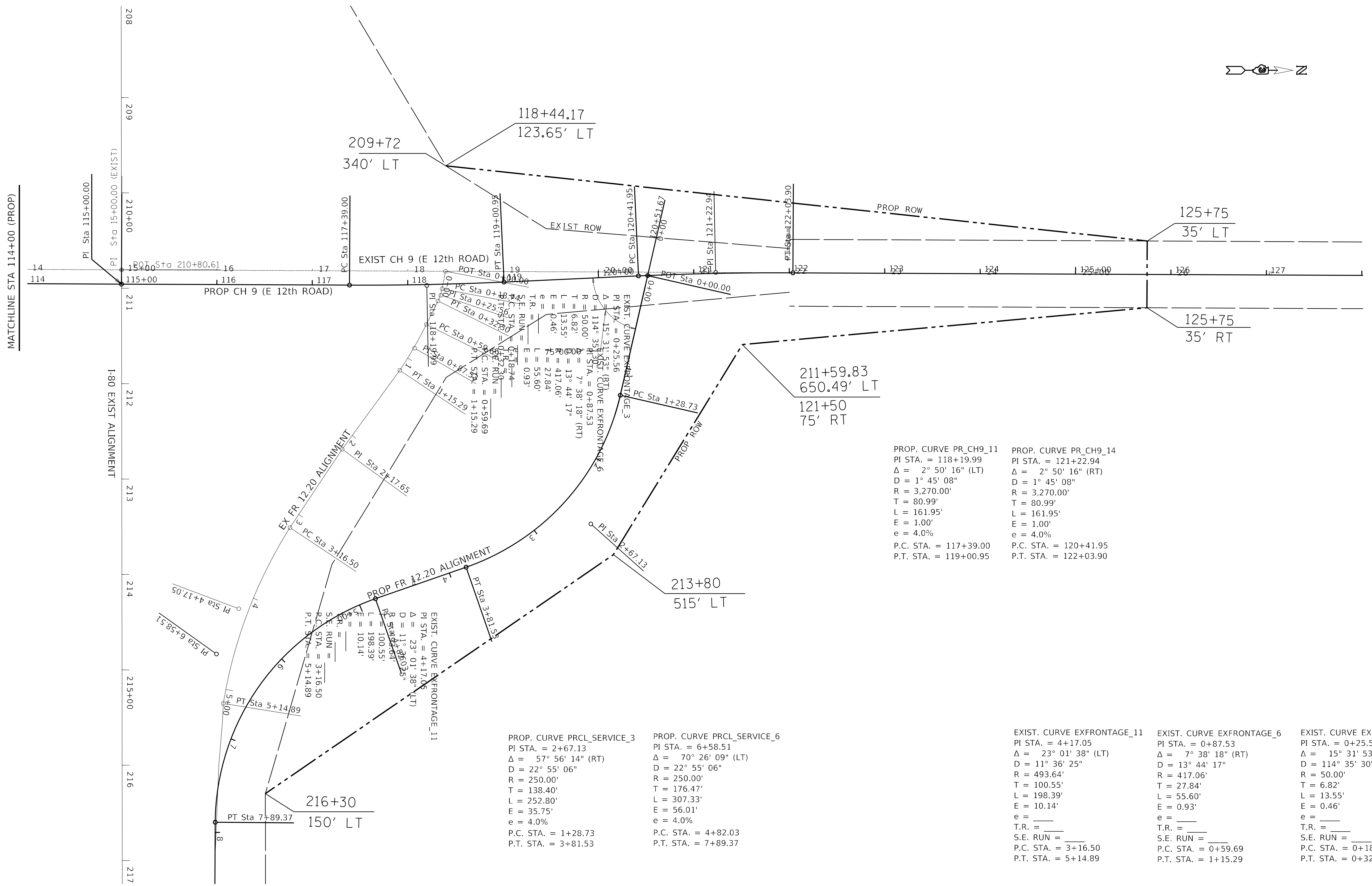

PROP. CURVE PR_CH9_11
PI STA. = 118+19.99
Δ = 2° 50' 16" (LT)
D = 1° 45' 08"
R = 3,270.00'
T = 80.99'
L = 161.95'
E = 1.00'
e = 4.0%
P.C. STA. = 117+39.00
P.T. STA. = 119+00.95

PROP. CURVE PR_CH9_14
PI STA. = 121+22.94
Δ = 2° 50' 16" (RT)
D = 1° 45' 08"
R = 3,270.00'
T = 80.99'
L = 161.95'
E = 1.00'
e = 4.0%
P.C. STA. = 120+41.95
P.T. STA. = 122+03.90

PROP. CURVE PRCL_SERVICE_3
PI STA. = 2+67.13
Δ = 57° 56' 14" (RT)
D = 22° 55' 06"
R = 250.00'
T = 138.40'
L = 252.80'
E = 35.75'
e = 4.0%
P.C. STA. = 1+28.73
P.T. STA. = 3+81.53

PROP. CURVE PRCL_SERVICE_6
PI STA. = 6+58.51
Δ = 70° 26' 09" (LT)
D = 22° 55' 06"
R = 250.00'
T = 176.47'
L = 307.33'
E = 56.01'
e = 4.0%
P.C. STA. = 4+82.03
P.T. STA. = 7+89.37

EXIST. CURVE EXFRONTAGE_11
PI STA. = 4+17.05
Δ = 23° 01' 38" (LT)
D = 11° 36' 25"
R = 493.64'
T = 100.55'
L = 198.39'
E = 10.14'
e = ____
T.R. = ____
S.E. RUN = ____
P.C. STA. = 3+16.50
P.T. STA. = 5+14.89

EXIST. CURVE EXFRONTAGE_6
PI STA. = 0+87.53
Δ = 7° 38' 18" (RT)
D = 13° 44' 17"
R = 417.06'
T = 27.84'
L = 55.60'
E = 0.93'
e = ____
T.R. = ____
S.E. RUN = ____
P.C. STA. = 0+59.69
P.T. STA. = 1+15.29

EXIST. CURVE EXFRONTAGE_3
PI STA. = 0+25.56
Δ = 15° 31' 53" (RT)
D = 114° 35' 30"
R = 50.00'
T = 6.82'
L = 13.55'
E = 0.46'
e = ____
T.R. = ____
S.E. RUN = ____
P.C. STA. = 0+18.74
P.T. STA. = 0+32.30

FILE NAME = c:\pw_work\pwidot\fergusonjh\d0318968\D366C59-sht-ATB.dgn	USER NAME = fergusonjh	DESIGNED -	REVISED -
		DRAWN -	REVISED -
	PLOT SCALE = 100.0000 ' / in.	CHECKED -	REVISED -
	PLOT DATE = 10/21/2019	DATE -	REVISED -

STATE OF ILLINOIS
DEPARTMENT OF TRANSPORTATION

ALIGNMENT

SCALE: | SHEET OF SHEETS | STA. TO STA.

F.A.I. RTE.	SECTION	COUNTY	TOTAL SHEETS	SHEET NO.
80	(50-3)HBR-3	LASALLE	137	26

CONTRACT NO. 66C59

ILLINOIS | FED. AID PROJECT

SOUTHEAST 1/4 OF SEC. 36,
T. 34 N., R. 2 E., 3RD P.M.

SOUTHWEST 1/4 OF SEC. 31,
T. 34 N., R. 3 E., 3RD P.M.

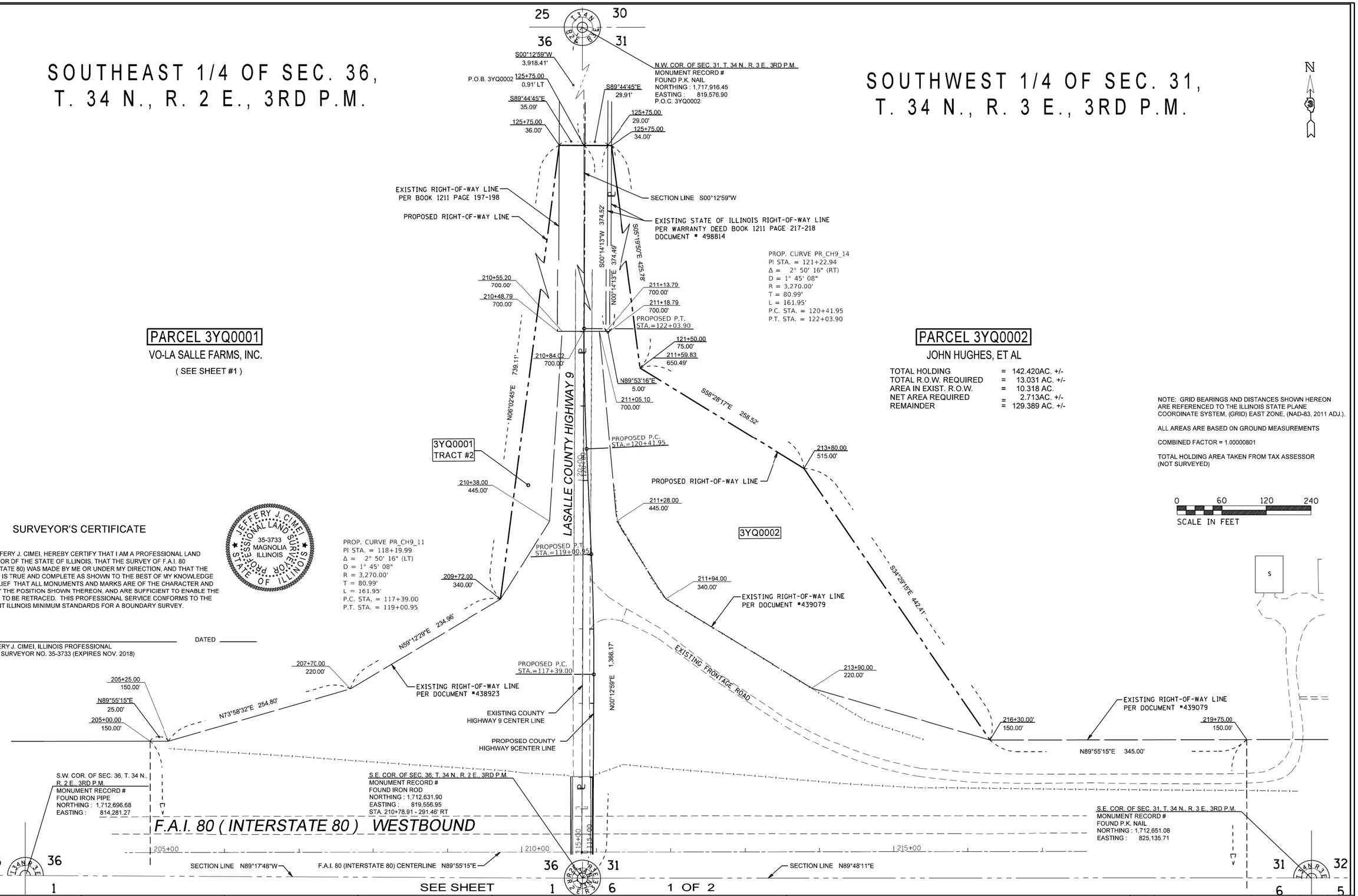

PARCEL 3YQ0001

VO-LA SALLE FARMS, INC.

(SEE SHEET #1)

PARCEL 3YQ0002

JOHN HUGHES, ET AL

TOTAL HOLDING	=	142.420AC. +/-
TOTAL R.O.W. REQUIRED	=	13.031 AC. +/-
AREA IN EXIST. R.O.W.	=	10.318 AC.
NET AREA REQUIRED	=	2.713AC. +/-
REMAINDER	=	129.389 AC. +/-

NOTE: GRID BEARINGS AND DISTANCES SHOWN HEREON ARE REFERENCED TO THE ILLINOIS STATE PLANE COORDINATE SYSTEM, (GRID) EAST ZONE, (NAD-83, 2011 ADJ.).

ALL AREAS ARE BASED ON GROUND MEASUREMENTS

COMBINED FACTOR = 1.00000801

TOTAL HOLDING AREA TAKEN FROM TAX ASSESSOR (NOT SURVEYED)

SURVEYOR'S CERTIFICATE

I, JEFFERY J. CIMEI, HEREBY CERTIFY THAT I AM A PROFESSIONAL LAND SURVEYOR OF THE STATE OF ILLINOIS, THAT THE SURVEY OF F.A.I. 80 (INTERSTATE 80) WAS MADE BY ME OR UNDER MY DIRECTION, AND THAT THE SURVEY IS TRUE AND COMPLETE AS SHOWN TO THE BEST OF MY KNOWLEDGE AND BELIEF THAT ALL MONUMENTS AND MARKS ARE OF THE CHARACTER AND OCCUPY THE POSITION SHOWN THEREON, AND ARE SUFFICIENT TO ENABLE THE SURVEY TO BE RETRACED. THIS PROFESSIONAL SERVICE CONFORMS TO THE CURRENT ILLINOIS MINIMUM STANDARDS FOR A BOUNDARY SURVEY.

JEFFERY J. CIMEI
35-3733
MAGNOLIA
ILLINOIS
PROFESSIONAL LAND SURVEYOR
STATE OF ILLINOIS

BY _____ DATED _____

JEFFERY J. CIMEI, ILLINOIS PROFESSIONAL
LAND SURVEYOR NO. 35-3733 (EXPIRES NOV. 2018)

PROP. CURVE PR_CH9_11
PI STA. = 118+19.99
Δ = 2° 50' 16" (LT)
D = 1° 45' 08"
R = 3,270.00'
T = 80.99'
L = 161.95'
P.C. STA. = 117+39.00
P.T. STA. = 119+00.95

FILE NAME = c:\pw_work\pwidot\fergusonjh\d0318968\D366C59-sht-ATB.dgn	USER NAME = fergusonjh	DESIGNED -	REVISED -
		DRAWN -	REVISED -
	PLOT SCALE = 100.0000 ' / in.	CHECKED -	REVISED -
	PLOT DATE = 10/21/2019	DATE -	REVISED -

STATE OF ILLINOIS
DEPARTMENT OF TRANSPORTATION

RIGHT-OF-WAY PLANS

SCALE: SHEET OF SHEETS STA. TO STA.

F.A.I. RTE.	SECTION	COUNTY	TOTAL SHEETS	SHEET NO.
80	(50-3)HBR-3	LASALLE	137	27
		CONTRACT NO. 66C59		
		ILLINOIS FED. AID PROJECT		

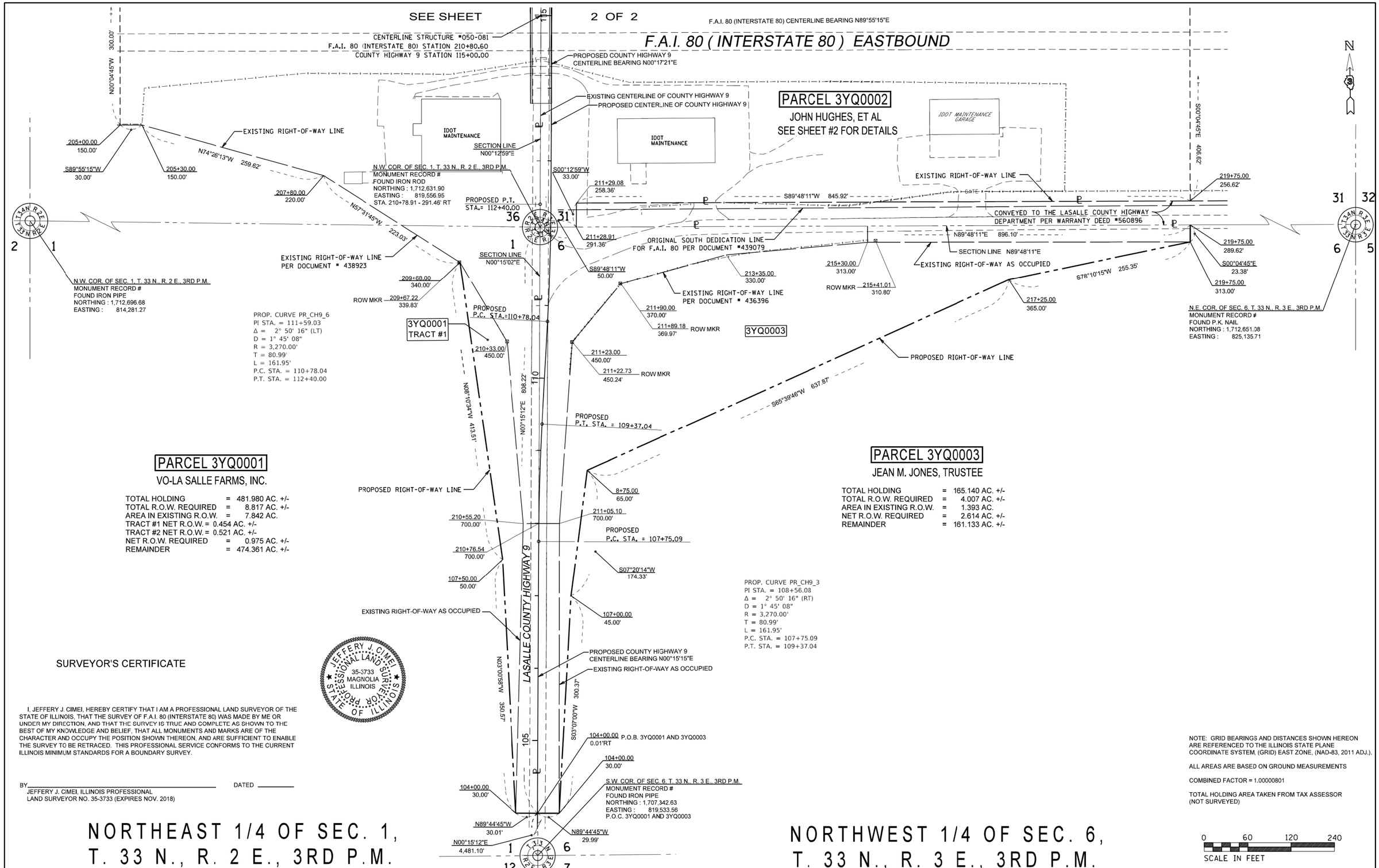

SURVEYOR'S CERTIFICATE

I, JEFFERY J. CIMEI, HEREBY CERTIFY THAT I AM A PROFESSIONAL LAND SURVEYOR OF THE STATE OF ILLINOIS, THAT THE SURVEY OF F.A.I. 80 (INTERSTATE 80) WAS MADE BY ME OR UNDER MY DIRECTION, AND THAT THE SURVEY IS TRUE AND COMPLETE AS SHOWN TO THE BEST OF MY KNOWLEDGE AND BELIEF, THAT ALL MONUMENTS AND MARKS ARE OF THE CHARACTER AND OCCUPY THE POSITION SHOWN THEREON, AND ARE SUFFICIENT TO ENABLE THE SURVEY TO BE RETRACED. THIS PROFESSIONAL SERVICE CONFORMS TO THE CURRENT ILLINOIS MINIMUM STANDARDS FOR A BOUNDARY SURVEY.

BY_____ DATED _____

JEFFERY J. CIMEI, ILLINOIS PROFESSIONAL LAND SURVEYOR NO. 35-3733 (EXPIRES NOV. 2018)

NOTE: GRID BEARINGS AND DISTANCES SHOWN HEREON ARE REFERENCED TO THE ILLINOIS STATE PLANE COORDINATE SYSTEM, (GRID) EAST ZONE, (NAD-83, 2011 ADJ.).

ALL AREAS ARE BASED ON GROUND MEASUREMENTS

COMBINED FACTOR = 1.00000801

TOTAL HOLDING AREA TAKEN FROM TAX ASSESSOR (NOT SURVEYED)

0 60 120 240
SCALE IN FEET

NORTHEAST 1/4 OF SEC. 1, T. 33 N., R. 2 E., 3RD P.M.

NORTHWEST 1/4 OF SEC. 6, T. 33 N., R. 3 E., 3RD P.M.

FILE NAME = c:\pw_work\pwidot\fergusonjh\d0318968\D366C59-sht-ATB.dgn	USER NAME = fergusonjh	DESIGNED -	REVISED -
		DRAWN -	REVISED -
	PLOT SCALE = 100.0000 ' / in.	CHECKED -	REVISED -
	PLOT DATE = 10/21/2019	DATE -	REVISED -

STATE OF ILLINOIS
DEPARTMENT OF TRANSPORTATION

RIGHT-OF-WAY PLANS

SCALE: SHEET OF SHEETS STA. TO STA.

F.A.I. RTE.	SECTION	COUNTY	TOTAL SHEETS	SHEET NO.
80	(50-3)HBR-3	LASALLE	137	28
		CONTRACT NO. 66C59		
	ILLINOIS	FED. AID PROJECT		

PLAN		BY	DATE
NOTE BOOK NO. ____	SURVEYED ____ PLOTTED ____ ALIGNMENT CHECKED ____ RT. OF WAY CHECKED ____ CADD FILE NAME ____		

PROFILE		BY	DATE
NOTE BOOK NO. ____	SURVEYED ____ PLOTTED ____ GRADES CHECKED ____ BM. NOTED ____ STRUCTURE NOTATNS CHKD ____		

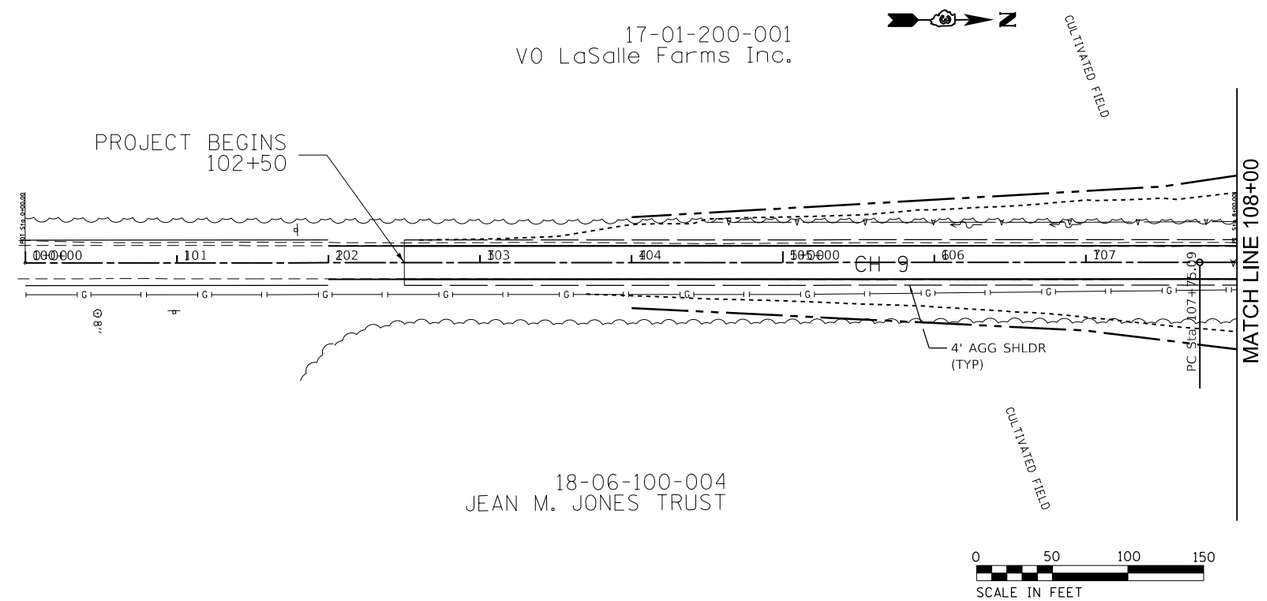

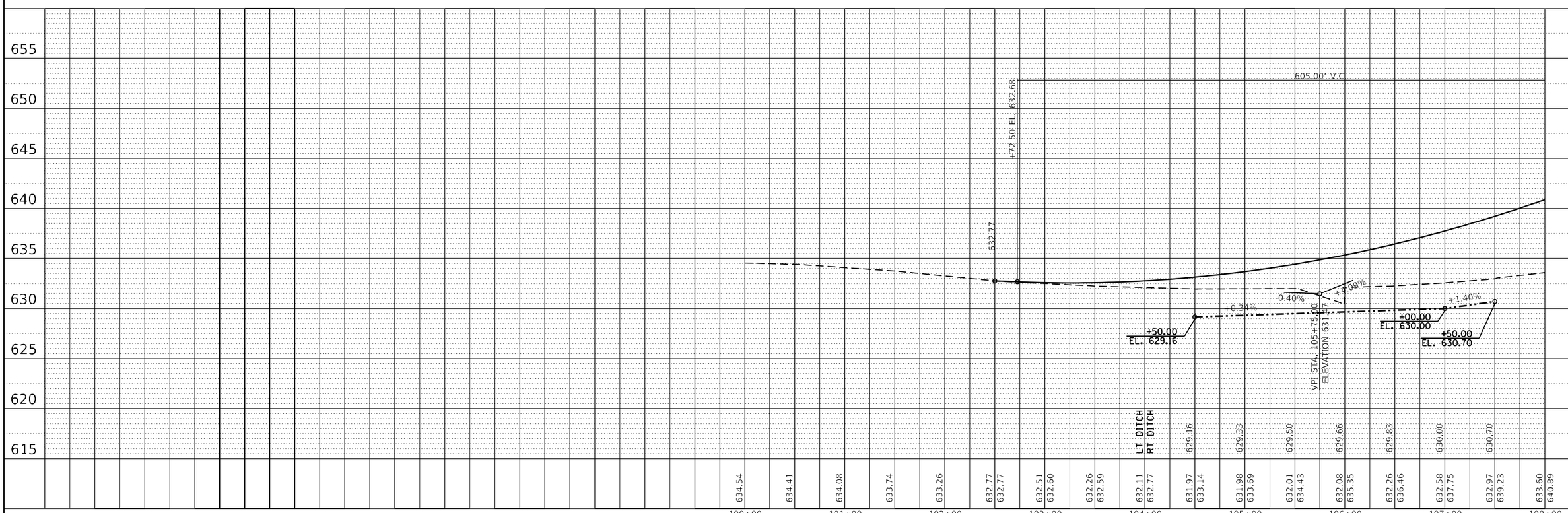

FILE NAME = c:\pw_work\pwidot\fergusonjh\d0318968\D366c59-sht-plnprf.dgn	USER NAME = fergusonjh	DESIGNED -	REVISED -
		DRAWN -	REVISED -
$MODELNAME$	PLOT SCALE = 100.0000 ' / in.	CHECKED -	REVISED -
	PLOT DATE = 10/21/2019	DATE -	REVISED -

STATE OF ILLINOIS
DEPARTMENT OF TRANSPORTATION

CH9 OVER I-80
PLAN & PROFILE

SCALE: SHEET OF SHEETS STA. TO STA.

F.A.I RTE.	SECTION	COUNTY	TOTAL SHEETS	SHEET NO.
80	(50-3)HBR-3	LASALLE	137	29
		CONTRACT NO. 66C59		
		ILLINOIS FED. AID PROJECT		

PROP. CURVE PR_CH9_3
PI STA. = 108+56.08
Δ = 2° 50' 16" (RT)
D = 1° 45' 08"
R = 3,270.00'
T = 80.99'
L = 161.95'
E = 1.00'
e = 4.0%
P.C. STA. = 107+75.09
P.T. STA. = 109+37.04

PROP. CURVE PR_CH9_6
PI STA. = 111+59.03
Δ = 2° 50' 16" (LT)
D = 1° 45' 08"
R = 3,270.00'
T = 80.99'
L = 161.95'
E = 1.00'
e = 4.0%
P.C. STA. = 110+78.04
P.T. STA. = 112+40.00

PROP. CURVE PR_CH9_11
PI STA. = 118+19.99
Δ = 2° 50' 16" (LT)
D = 1° 45' 08"
R = 3,270.00'
T = 80.99'
L = 161.95'
E = 1.00'
e = 4.0%
P.C. STA. = 117+39.00
P.T. STA. = 119+00.95

PROP. CURVE PR_CH9_14
PI STA. = 121+22.94
Δ = 2° 50' 16" (RT)
D = 1° 45' 08"
R = 3,270.00'
T = 80.99'
L = 161.95'
E = 1.00'
e = 4.0%
P.C. STA. = 120+41.95
P.T. STA. = 122+03.90

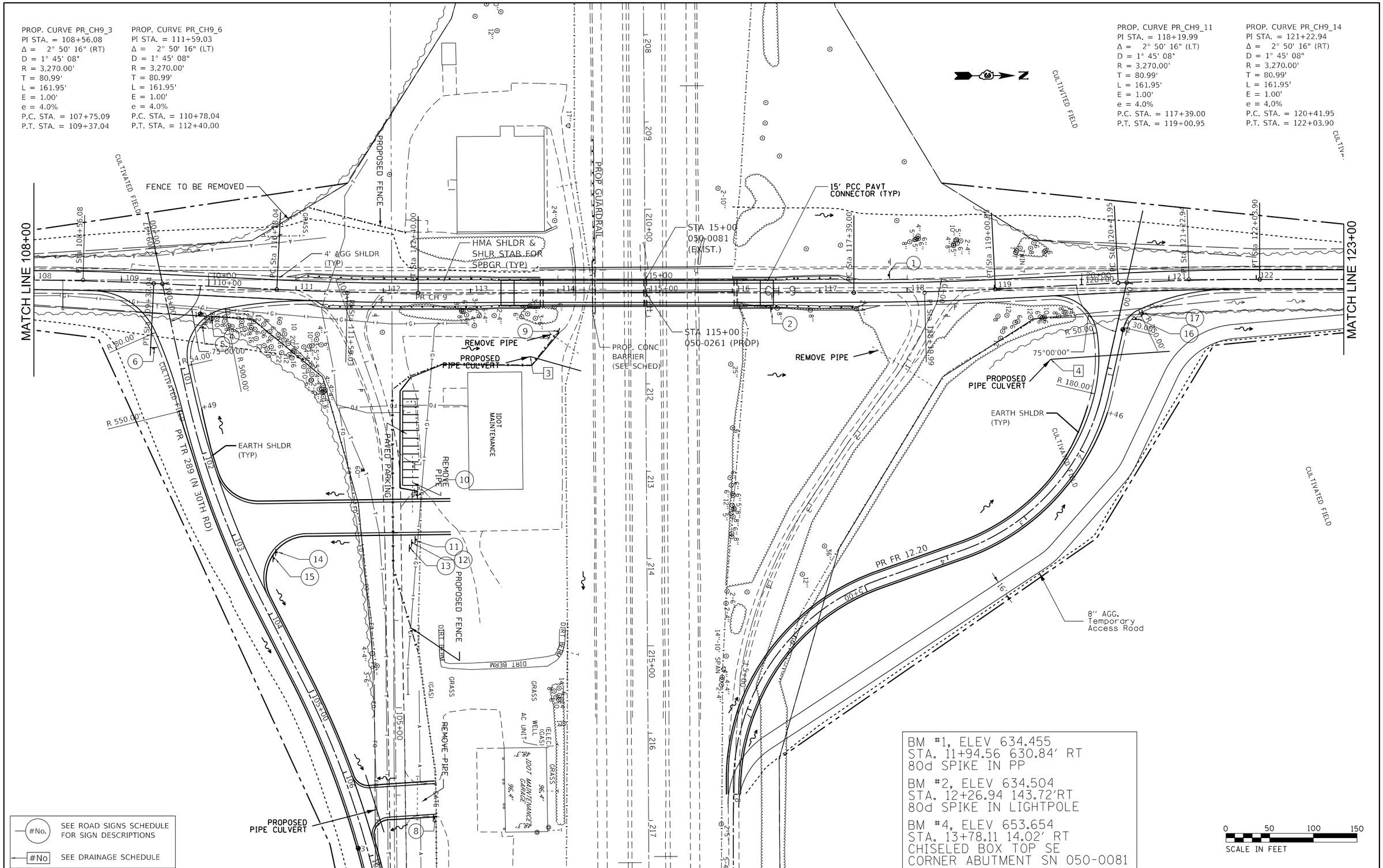

FILE NAME = c:\pw_work\pwidot\calderonl\d0318968\D366c59-sht-plnprf.dgn	USER NAME = calderonl	DESIGNED -	REVISED -
		DRAWN -	REVISED -
	PLOT SCALE = 100.0000 ' / in.	CHECKED -	REVISED -
$MODELNAME$	PLOT DATE = 10/21/2019	DATE -	REVISED -

STATE OF ILLINOIS
DEPARTMENT OF TRANSPORTATION

CH9 OVER I-80
PLAN & PROFILE

SCALE: | SHEET OF SHEETS | STA. TO STA.

F.A.I RTE.	SECTION	COUNTY	TOTAL SHEETS	SHEET NO.
80	(50-3)HBR-3	LASALLE	137	30
		CONTRACT NO. 66C59		

ILLINOIS FED. AID PROJECT

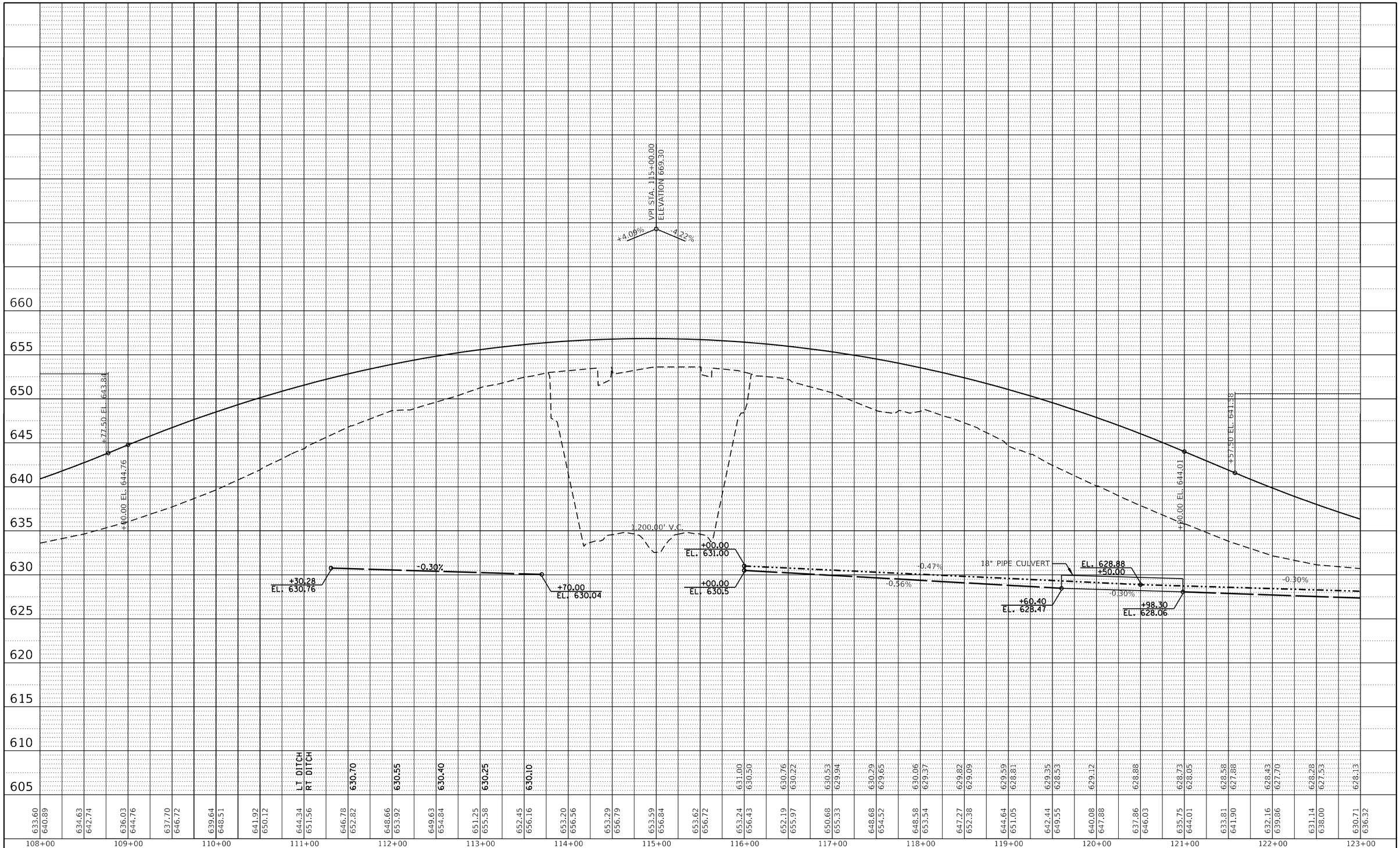

PLAN	BY	DATE
SURVEYED		
PLOTTED		
ALIGNMENT CHECKED		
RT. OF WAY CHECKED		
CADD FILE NAME		
NOTE BOOK NO.		

PROFILE	BY	DATE
SURVEYED		
PLOTTED		
GRADES CHECKED		
BRM. NOTED		
STRUCTURE NOTAT'NS CHK'D		
NOTE BOOK NO.		

FILE NAME = c:\pw_work\pwidot\fergusonjh\d0318968\D366c59-sht-plnprf.dgn	USER NAME = fergusonjh	DESIGNED -	REVISED -
		DRAWN -	REVISED -
	PLOT SCALE = 100.0000 ' / in.	CHECKED -	REVISED -
$MODELNAME$	PLOT DATE = 10/21/2019	DATE -	REVISED -

STATE OF ILLINOIS
DEPARTMENT OF TRANSPORTATION

CH9 OVER I-80
PLAN & PROFILE

SCALE: SHEET OF SHEETS STA. TO STA.

F.A.I RTE.	SECTION	COUNTY	TOTAL SHEETS	SHEET NO.
80	(50-3)HBR-3	LASALLE	137	31

CONTRACT NO. 66C59

ILLINOIS FED. AID PROJECT

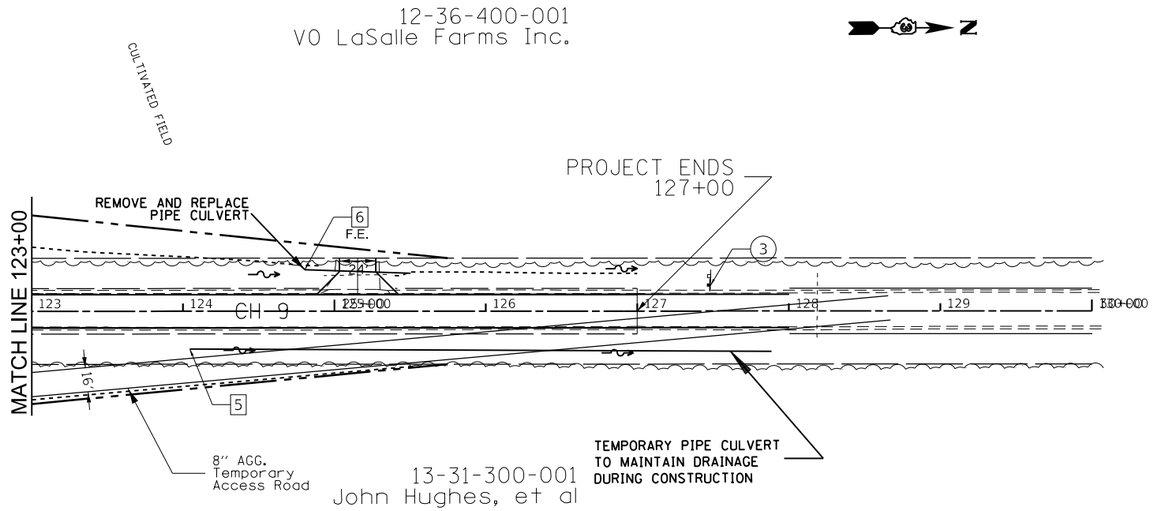

#No. SEE ROAD SIGNS SCHEDULE FOR SIGN DESCRIPTIONS

#No SEE DRAINAGE SCHEDULE

0 50 100 150
SCALE IN FEET

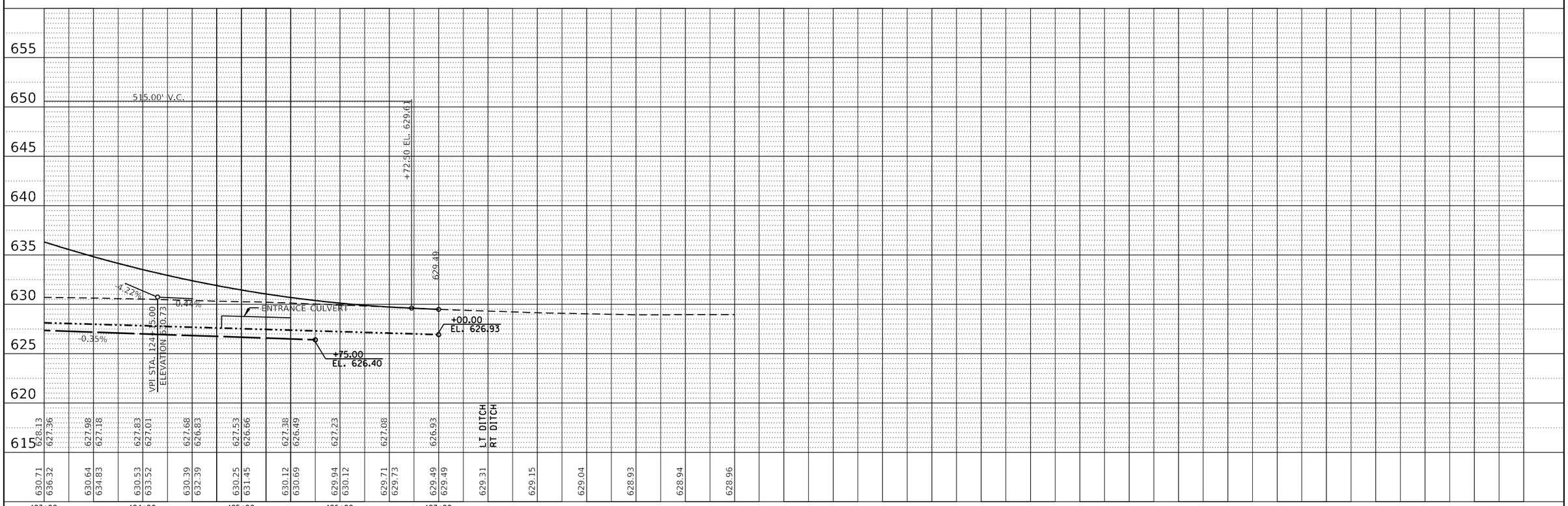

PLAN	BY	DATE
SURVEYED		
PLOTTED		
ALIGNMENT CHECKED		
RT. OF WAY CHECKED		
CADD FILE NAME		
NOTE BOOK NO.		

PROFILE	BY	DATE
SURVEYED		
PLOTTED		
GRADES CHECKED		
BM. NOTED		
STRUCTURE NOTAT'NS CH'KD		
NOTE BOOK NO.		

FILE NAME = c:\pw_work\pwidot\calderonl\d0318968\D366659-sht-plnprf.dgn	USER NAME = calderonl	DESIGNED -	REVISED -
		DRAWN -	REVISED -
	PLOT SCALE = 100.0000 ' / in.	CHECKED -	REVISED -
$MODELNAME$	PLOT DATE = 10/21/2019	DATE -	REVISED -

STATE OF ILLINOIS
DEPARTMENT OF TRANSPORTATION

CH9 OVER I-80
PLAN & PROFILE

SCALE: SHEET OF SHEETS STA. TO STA.

F.A.P RTE.	SECTION	COUNTY	TOTAL SHEETS	SHEET NO.
80	(50-3)HBR-3	LASALLE	137	32
		CONTRACT NO. 66C59		
		ILLINOIS FED. AID PROJECT		

PROP. CURVE PRCL_SERVICE_3
PI STA. = 2+67.13
Δ = 57° 56' 14" (RT)
D = 22° 55' 06"
R = 250.00'
T = 138.40'
L = 252.80'
E = 35.75'
e = 4.0%
P.C. STA. = 1+28.73
P.T. STA. = 3+81.53

PROP. CURVE PRCL_SERVICE_6
PI STA. = 6+58.51
Δ = 70° 26' 09" (LT)
D = 22° 55' 06"
R = 250.00'
T = 176.47'
L = 307.33'
E = 56.01'
e = 4.0%
P.C. STA. = 4+82.03
P.T. STA. = 7+89.37

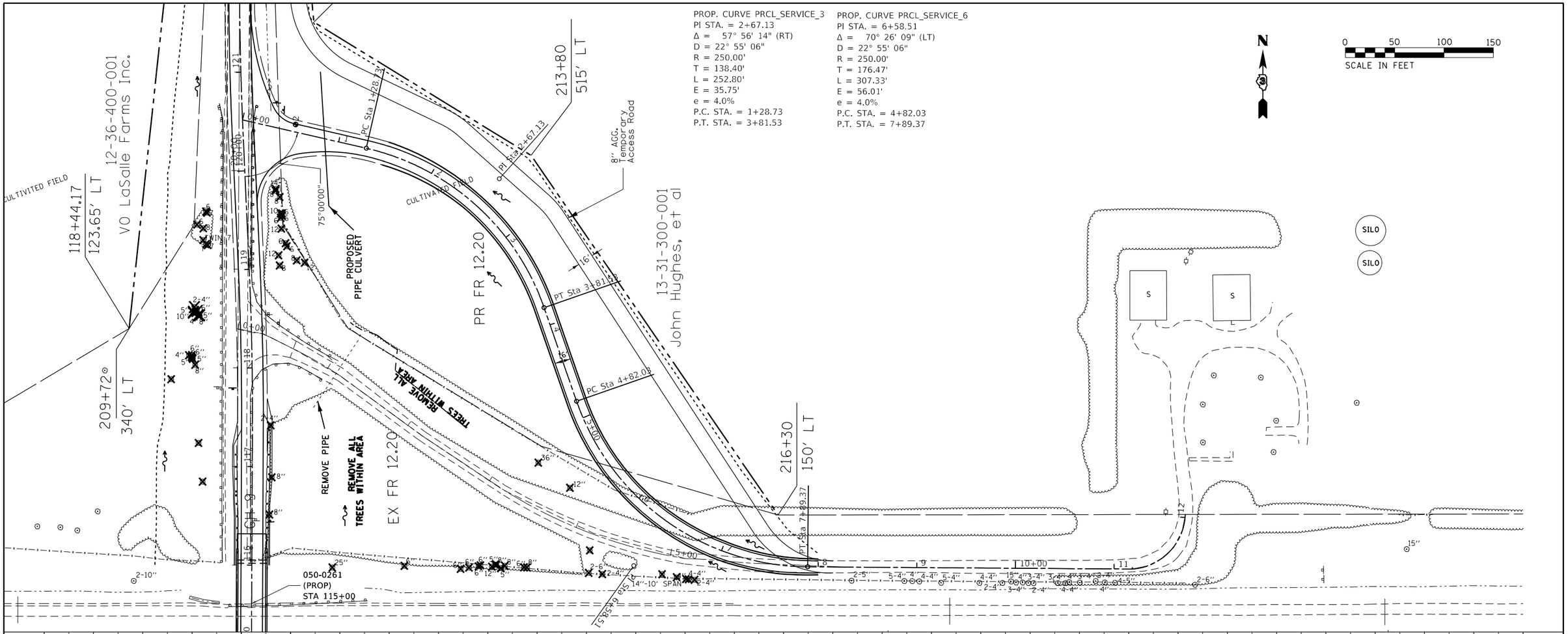

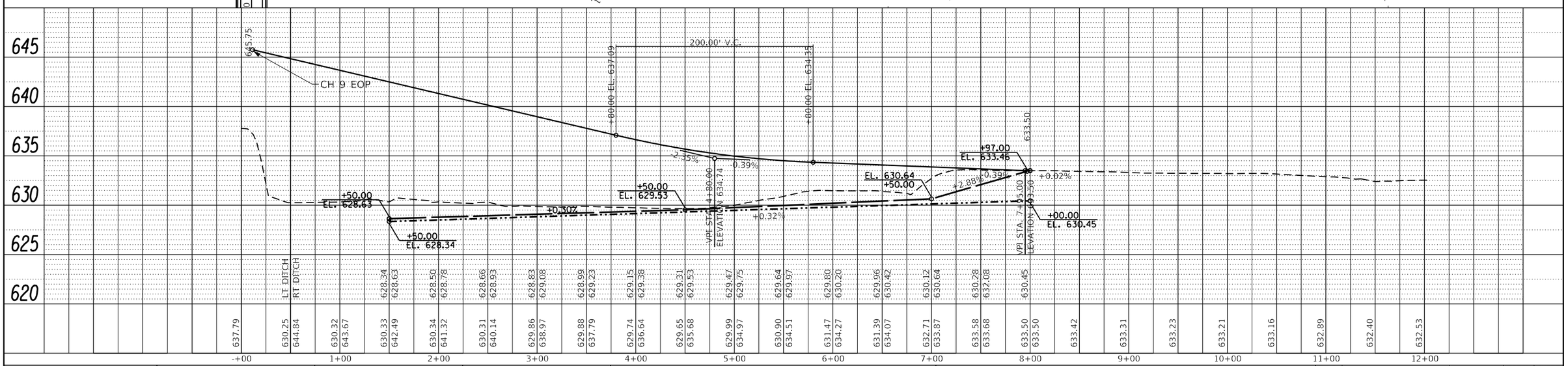

PLAN	BY	DATE
SURVEYED		
PLOTTED		
ALIGNMENT CHECKED		
RT. OF WAY CHECKED		
CADD FILE NAME		
NOTE BOOK NO.		

PROFILE	BY	DATE
SURVEYED		
PLOTTED		
GRADES CHECKED		
BKM. NOTED		
STRUCTURE NOTATNS CHKD		
NOTE BOOK NO.		

FILE NAME = c:\pw_work\pwidot\calderonl\d0318968\D366159-sht-plnprf-Township&service.dgn	USER NAME = calderonl	DESIGNED -	REVISED -
		DRAWN -	REVISED -
	PLOT SCALE = 100.0000 ' / in.	CHECKED -	REVISED -
$MODELNAME$	PLOT DATE = 10/21/2019	DATE -	REVISED -

STATE OF ILLINOIS
DEPARTMENT OF TRANSPORTATION

FR 12.20

SCALE: SHEET OF SHEETS STA. TO STA.

F.A.I RTE.	SECTION	COUNTY	TOTAL SHEETS	SHEET NO.
80	(50-3)HBR-3	LASALLE	137	33

CONTRACT NO. 66C59

ILLINOIS FED. AID PROJECT

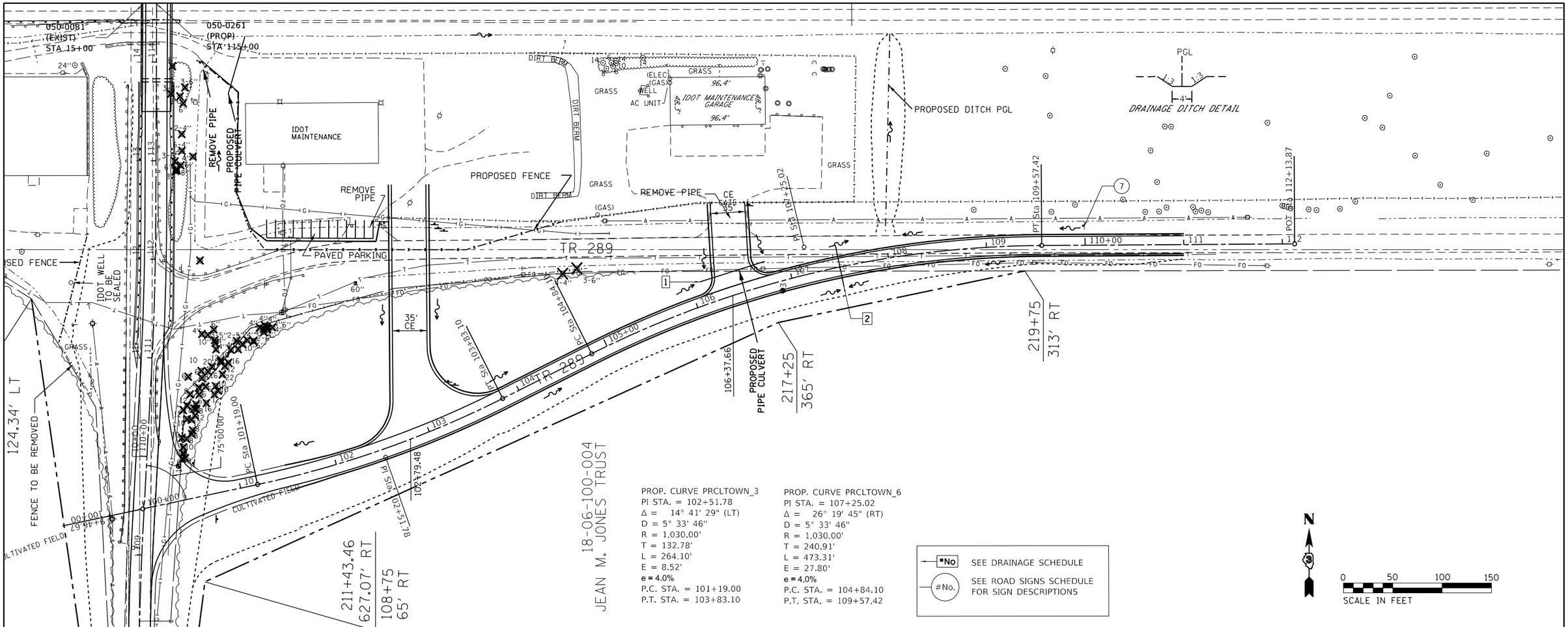

PROP. CURVE PRCLTOWN_3
PI STA. = 102+51.78
Δ = 14° 41' 29" (LT)
D = 5° 33' 46"
R = 1,030.00'
T = 132.78'
L = 264.10'
E = 8.52'
e = 4.0%
P.C. STA. = 101+19.00
P.T. STA. = 103+83.10

PROP. CURVE PRCLTOWN_6
PI STA. = 107+25.02
Δ = 26° 19' 45" (RT)
D = 5° 33' 46"
R = 1,030.00'
T = 240.91'
L = 473.31'
E = 27.80'
e = 4.0%
P.C. STA. = 104+84.10
P.T. STA. = 109+57.42

SEE DRAINAGE SCHEDULE

SEE ROAD SIGNS SCHEDULE FOR SIGN DESCRIPTIONS

N

0 50 100 150
SCALE IN FEET

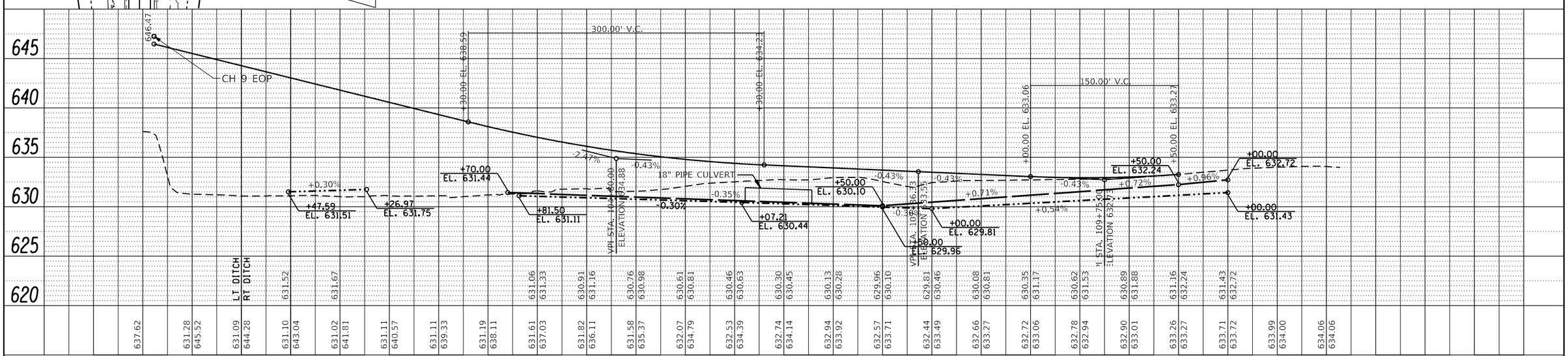

FILE NAME =	USER NAME = calderonl	DESIGNED -	REVISED -
c:\pw_work\pwidot\calderonl\d0318968\D366C59-sht-plnprf-Township&service.dgn		DRAWN -	REVISED -
	PLOT SCALE = 100.0000 ' / in.	CHECKED -	REVISED -
$MODELNAME$	PLOT DATE = 10/21/2019	DATE -	REVISED -

STATE OF ILLINOIS
DEPARTMENT OF TRANSPORTATION

TR 289 (N. 30th Road)

SCALE: SHEET OF SHEETS STA. TO STA.

F.A.I RTE.	SECTION	COUNTY	TOTAL SHEETS	SHEET NO.
80	(50-3)HBR-3	LASALLE	137	34

CONTRACT NO. 66C59

ILLINOIS FED. AID PROJECT

CH 9 REMOVAL PLAN

EXISTING STRUCTURE OMITTED FOR CLARITY

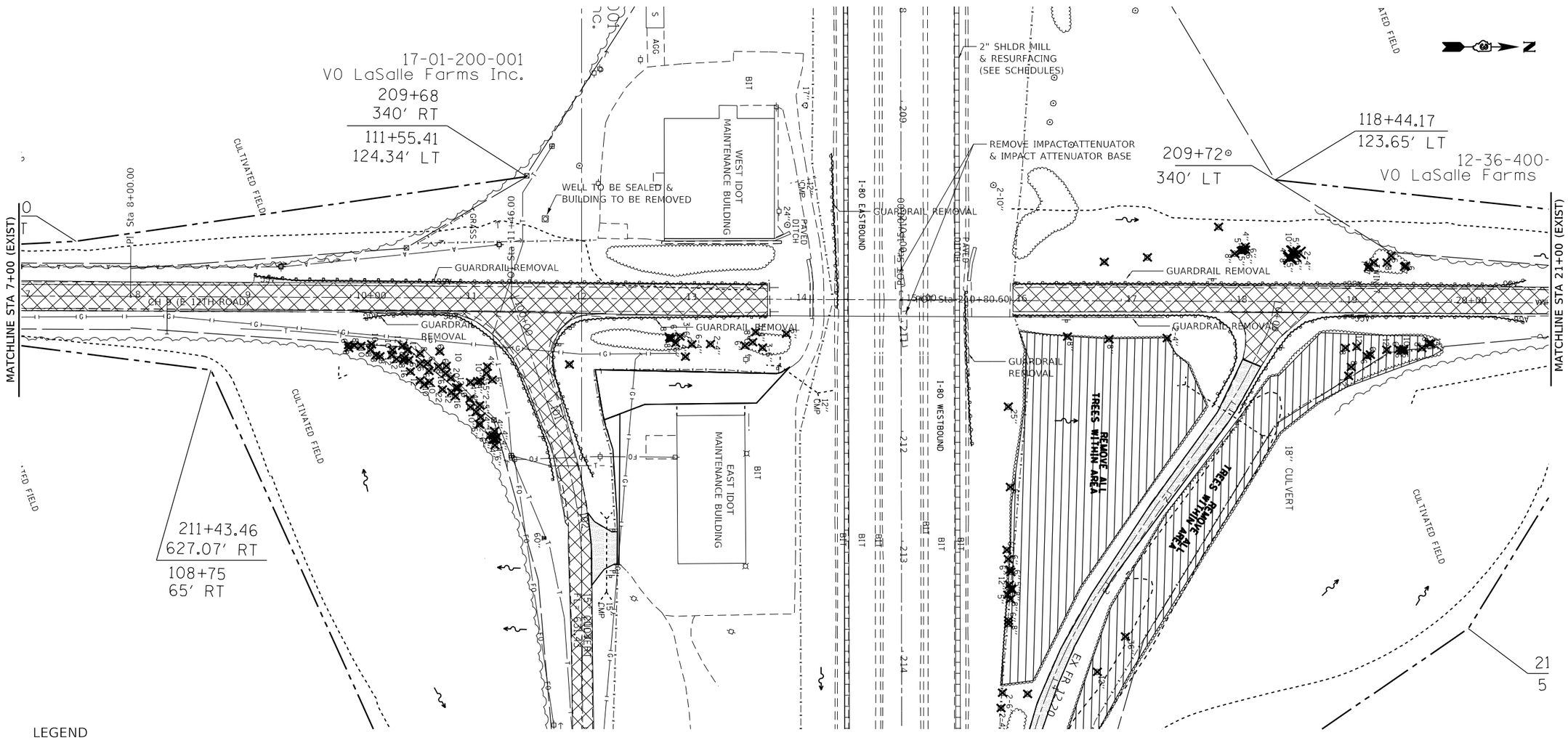

LEGEND

- CMP REMOVAL
- GUARDRAIL REMOVAL
- ENTRANCE REMOVAL
- TREE REMOVAL (ACRE)
- TREE REMOVAL (UNIT)
- SHLDR HMA MILL & RESURFACING (2")
- PAVEMENT REMOVAL

0 50 100 150
SCALE IN FEET

FILE NAME = c:\pw_work\pwidot\fergusonjh\d0318968\D366c59-sht-rem-plan.dgn	USER NAME = fergusonjh	DESIGNED -	REVISED -	STATE OF ILLINOIS DEPARTMENT OF TRANSPORTATION	REMOVAL PLAN	F.A.I. RTE.	SECTION	COUNTY	TOTAL SHEETS	SHEET NO.
		DRAWN -	REVISED -			80	(50-3)HBR-3	LASALLE	137	35
	PLOT SCALE = 100.0000 ' / in.	CHECKED -	REVISED -					CONTRACT NO. 66C59		
	PLOT DATE = 10/21/2019	DATE -	REVISED -		SCALE: SHEET OF SHEETS STA. TO STA.		ILLINOIS FED. AID PROJECT			

CH 9 REMOVAL PLAN

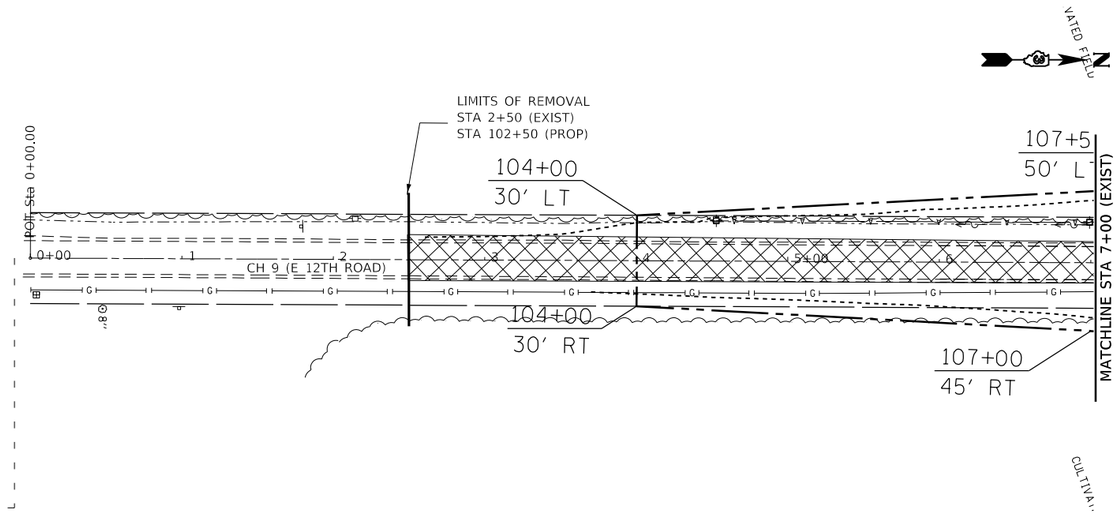

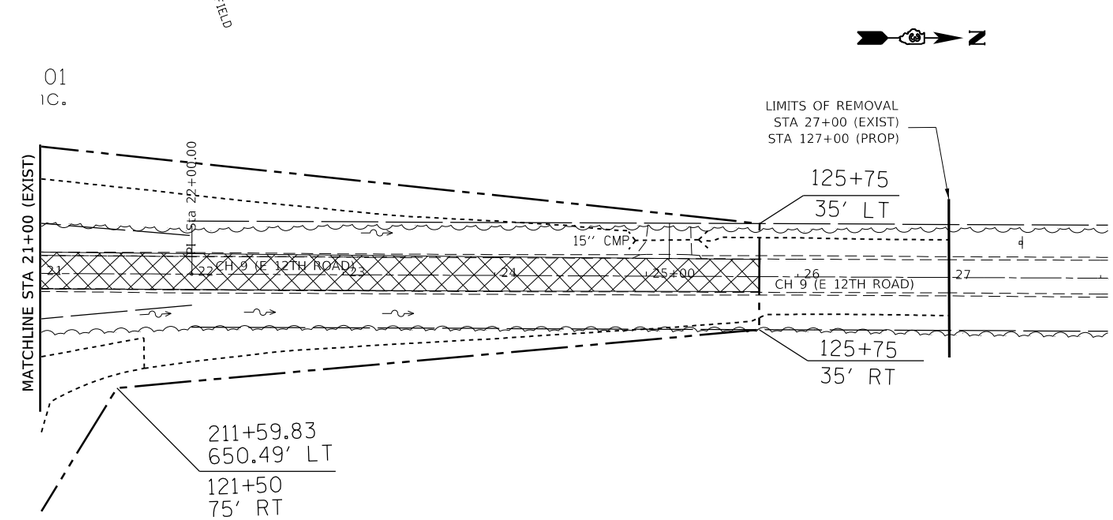

LEGEND

- CMP REMOVAL
- GUARDRAIL REMOVAL
- ENTRANCE REMOVAL
- TREE REMOVAL (ACRE)
- TREE REMOVAL (UNIT)
- SHLDR HMA MILL & RESURFACING (2")
- PAVEMENT REMOVAL

0 50 100 150
SCALE IN FEET

FILE NAME = c:\pw_work\pwidot\fergusonjh\d0318968\D366c59-sht-rem-plan.dgn	USER NAME = fergusonjh	DESIGNED -	REVISED -	STATE OF ILLINOIS DEPARTMENT OF TRANSPORTATION	REMOVAL PLAN				F.A.I. RTE.	SECTION	COUNTY	TOTAL SHEETS	SHEET NO.
		DRAWN -	REVISED -						80	(50-3)HBR-3	LASALLE	137	36
	PLOT SCALE = 100.0000 ' / in.	CHECKED -	REVISED -								CONTRACT NO. 66C59		
	PLOT DATE = 10/21/2019	DATE -	REVISED -		SCALE:	SHEET OF SHEETS	STA.	TO STA.		ILLINOIS	FED. AID PROJECT		

TR 289 REMOVAL PLAN

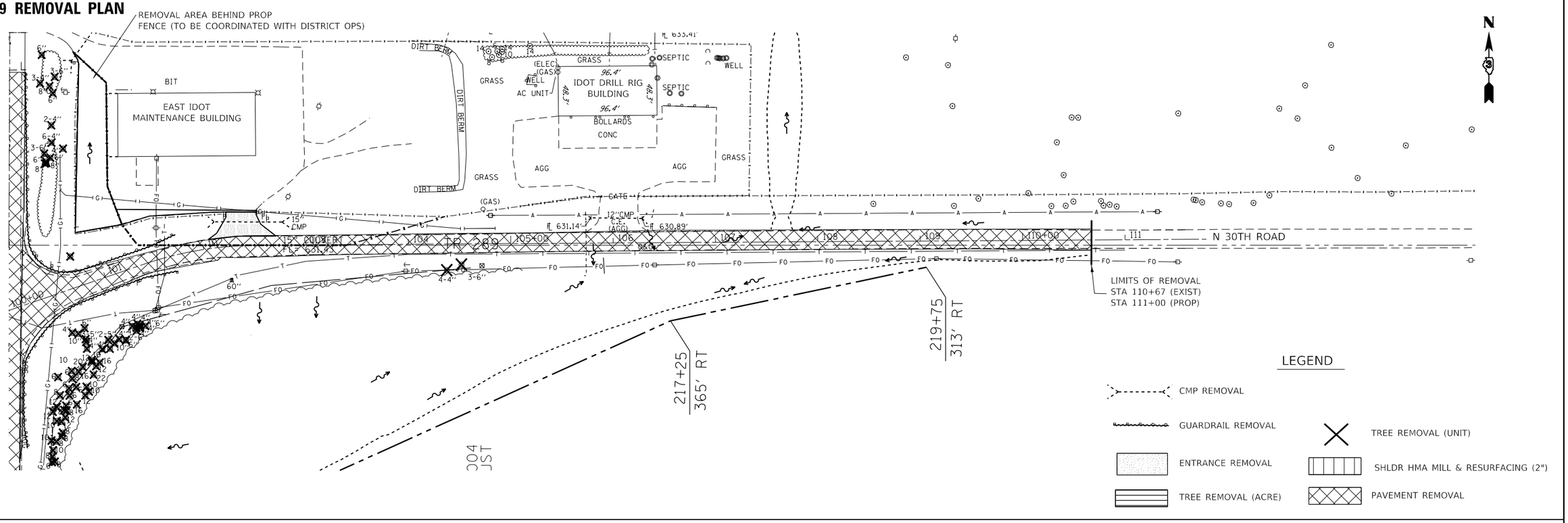

SERVICE RD FR 12.20 REMOVAL PLAN

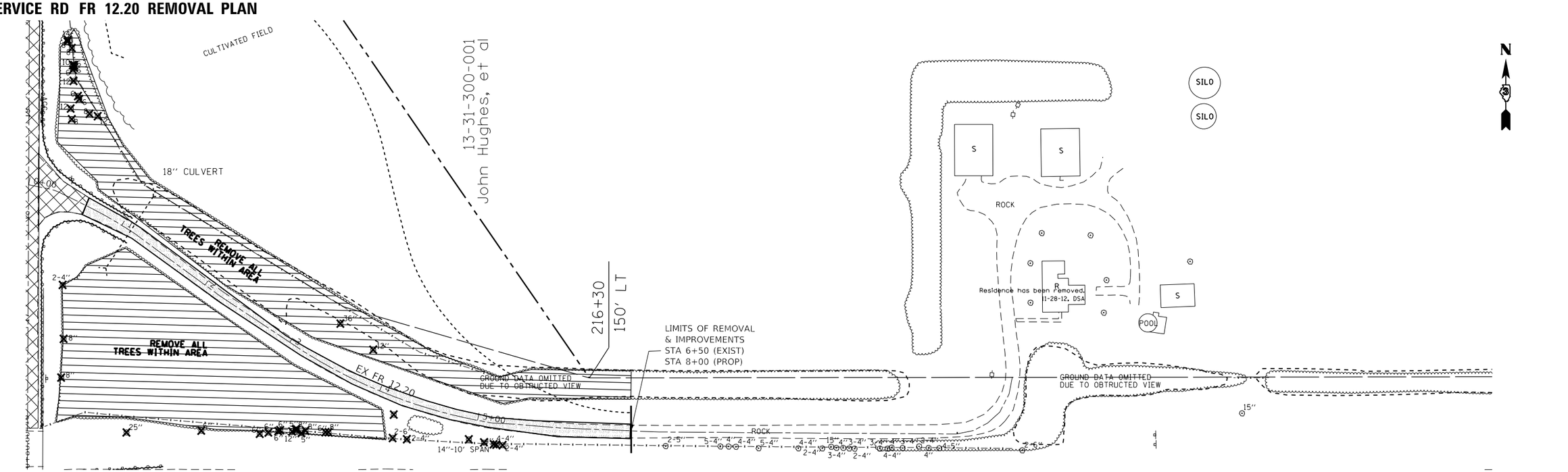

FILE NAME = c:\pw_work\pwidot\fergusonjh\d0318968\D366c59-sht-rem-plan.dgn	USER NAME = fergusonjh	DESIGNED -	REVISED -	STATE OF ILLINOIS DEPARTMENT OF TRANSPORTATION	REMOVAL PLAN	F.A.I. RTE.	SECTION	COUNTY	TOTAL SHEETS	SHEET NO.
		DRAWN -	REVISED -			80	(50-3)HBR-3	LASALLE	137	37
	PLOT SCALE = 100.0000 ' / in.	CHECKED -	REVISED -			CONTRACT NO. 66C59				
	PLOT DATE = 10/21/2019	DATE -	REVISED -		SCALE: SHEET OF SHEETS STA. TO STA.	ILLINOIS FED. AID PROJECT				

GENERAL STAGING NOTES

1) THE TRAFFIC CONTROL PLANS SHALL SERVE AS A GUIDE FOR SAFE DIVERSION OF TRAFFIC DURING EXECUTION OF THIS CONTRACT. HOWEVER, THE CONTRACTOR MAY IMPROVE OR MODIFY THE TRAFFIC CONTROL PLANS TO MEET CONSTRUCTION NEEDS BUT NOT AT THE EXPENSE OF PUBLIC SAFETY OR CONVENIENCE. ANY CHANGES TO THE TRAFFIC CONTROL PLANS SHALL BE SUBMITTED TO THE ENGINEER FOR APPROVAL.

2) THE ENGINEER SHALL BE INFORMED 48 HOURS IN ADVANCE OF ANY CHANGE TO THE STAGING PLANS, OR ANY CHANGE IN STAGE.

3) THE CONTRACTOR SHALL BE REQUIRED TO MAINTAIN ACCESS TO ALL ENTRANCES, APPROACHES, AND TEMPORARY ROADS WITHIN THE PROJECT LIMITS DURING CONSTRUCTION ACTIVITIES AND/OR AT THE DIRECTION OF THE ENGINEER. THIS WORK SHALL BE PAID FOR AT THE CONTRACT UNIT PRICE PER TON FOR "AGGREGATE FOR TEMPORARY ACCESS".

4) ALL EXISTING SIGNS THAT ARE IN CONFLICT WITH THE TRAFFIC CONTROL PLANS SHALL BE COVERED OR REMOVED IN ACCORDANCE WITH ARTICLE 107.25 OF THE STANDARD SPECIFICATIONS.

5) THE CONTRACTOR SHALL PLACE A CHANGEABLE MESSAGE SIGN AT THE WEST AND EAST LIMITS OF THE PROJECT ALONG I-80 AS DIRECTED BY THE ENGINEER TO INFORM MOTORISTS OF UPCOMING CONSTRUCTION ACTIVITIES. THE MESSAGE SIGN WITH THE APPROPRIATE INFORMATION SHALL BE IN PLACE TWO WEEKS PRIOR TO START OF CONSTRUCTION ACTIVITIES. THIS WORK IS TO BE PAID FOR AT THE CONTRACT UNIT PRICE PER CALENDAR MONTH FOR "CHANGEABLE MESSAGE SIGN".

6) ANY SAW CUTTING OF THE EXISTING PAVEMENT FOR STAGE CONSTRUCTION SHALL BE INCLUDED IN THE CONTRACT UNIT PRICE PER SQ YD FOR "PAVEMENT REMOVAL".

7) THE CONTRACTOR SHALL GIVE THE ENGINEER TWO WEEK NOTICE BEFORE CLOSING THE ROAD

8) OFF-PEAK HOURS ARE 6 PM TO 1 PM FOR EASTBOUND AND WESTBOUND I-80. HOURS FOR BEAM REMOVAL/REPLACEMENT WILL BE 9 PM TO 5 AM.

9) TEMPORARY CONCRETE BARRIER FOR CENTER PIER CONSTRUCTION MUST BE PLACED/REMOVED DURING OFF-PEAK HOURS.

10) PRIOR TO INSTALLING POST MOUNTED SIGNS, THE CONTRACTOR SHALL CONTACT J.U.L.I.E.

11) EXISTING PAVEMENT MARKINGS THAT INTERFERE WITH STAGE CONSTRUCTION PAVEMENT MARKINGS SHALL BE REMOVED AS DIRECTED BY THE ENGINEER.

12) THE CONTRACTOR MUST VERIFY FIELD CONDITIONS BEFORE STARTING ANY WORK. CONFLICTS, DISCREPANCIES, OMISSIONS MUST BE REPORTED TO THE ENGINEER.

13) ANY IDOT SIGN THAT IS COVERED OR CHANGED SHALL BE DONE IN A MANNER WHICH DOES NOT DAMAGE ANY SIGNS OR POSTS. ANY SIGN OR POST WHICH THE ENGINEER DETERMINES HAS BEEN DAMAGED BY THE CONTRACTOR SHALL BE REPAIRED OR REPLACED AT THE CONTRACTOR'S OWN EXPENSE.

14) TWO LANES IN EACH DIRECTION ON I-80 SHALL BE MAINTAINED AT ALL TIMES ACCORDING TO THE SUGGESTED MAINTENANCE OF TRAFFIC PLANS. LANE CLOSURES ON I-80 WILL BE ALLOWED DURING OFF PEAK HOURS FOR PLACEMENT/REMOVAL OF TRAFFIC CONTOL DEVICES AND BEAM REMOVAL/REPLACEMENT AS APPROVED BY THE ENGINEER.

15) THE CONTRACTOR SHALL COORDINATE THE DETOURING OF TRAFFIC WITH CONTRACTOR'S ACTIVITIES ON NEARBY PROJECTS WHEN APPLICABLE.

SEQUENCE OF CONSTRUCTION (I-80)

STAGE 1

1. SET UP TRAFFIC CONTROL DEVICES ON I-80 AND CH 9 ACCORDING TO THE SUGGESTED MAINTENANCE OF TRAFFIC PLANS AND TRAFFIC CONTROL DETAILS. USE HWY STANDARD 701101 AND 701426

2. MILL AND RESURFACE 4' FROM 10' OUTSIDE SHOULDER FOR STAGING.

3. CLOSE I-80 OUTSIDE SHOULDER IN BOTH DIRECTIONS ACCORDING TO SUGGESTED MAINTENANCE OF TRAFFIC PLANS USING TEMPORARY CONCRETE BARRIER.

4. REMOVE EXISTING BRIDGE DECK.

5. REMOVE BRIDGE BEAMS DURING NIGHT-TIME HOURS ONLY (9 PM TO 5 AM) UTILIZING TOTAL INTERSTATE CLOSURE AT NIGHT DETAIL. USE I-80 CLOSURE DETOUR ROUTE AS SHOWN IN THE PLANS.

6. REMOVE EXISTING GUARDRAIL AND SHOULDER AS SHOWN IN THE PLANS.

7. REMOVE EXISTING ABUTMENTS, PIERS AND BRIDGE CONE (AS NECESSARY).

8. BEGIN CONSTRUCTION OF THE BRIDGE CONE EARTHWORK AND PROPOSED ABUTMENTS.

STAGE 2

1. ADJUST TRAFFIC CONTROL DEVICES TO CLOSE I-80 INSIDE SHOULDERS IN BOTH DIRECTIONS AS SHOWN IN THE SUGGESTED MAINTENANCE OF TRAFFIC PLANS.

2. REMOVE AND CONSTRUCT CENTER PIER AND DRAINAGE ACCORDING TO THE PLANS.

3. INSTALL BRIDGE BEAMS DURING NIGHT-TIME HOURS ONLY (9 PM TO 5 AM) UTILIZING TOTAL INTERSTATE CLOSURE AT NIGHT DETAIL. USE I-80 CLOSURE ROUTE AS SHOWN IN THE PLANS.

4. COMPLETE SUPERSTRUCTURE AND APPROACH PAVEMENTS.

5. REPLACE PAVEMENT MARKING AS NEEDED.

6. INSTALL IMPACT ATTENUATOR (SAND MODULE) AT BOTH SIDES OF THE MEDIAN PIER , REINSTALL HIGH TENSION CABLE MEDIAN BARRIER, GUARDRAIL AND CONCRETE BARRIER.

7. REMOVE ALL ASSOCIATED TRAFFIC CONTROL AND COMPLETE PUNCH LIST ITEMS.

SEQUENCE OF CONSTRUCTION (CH 9)

STAGE 1

1. INSTALL TEMPORARY INFORMATION SIGNS AND TRAFFIC CONTROL FOR CH-9 ROAD CLOSURES. USE HWY STND BLR-21 TRAFFIC CONTROL DETAIL.

2. INSTALL TEMPORARY ACCESS FOR PROPERTIES AND BUILDING WITHIN CONSTRUCTION ZONE. THE CONTRACTOR SHALL COORDINATE WITH THE RESIDENT AND PROPERTY OWNERS FOR ACCESS. AT NO POINT DURING CONSTRUCTION, ACCESS SHALL BE RESTRICTED TO PROPERTY OWNERS.

3. BEGIN REMOVAL OF GUARDRAIL, PAVEMENT AND TREE REMOVAL.

4. ROUGH GRADE DITCHES ALONG THE ROAD TO PROVIDE POSITIVE DRAINAGE DURING CONSTRUCTION.

5. BUILD EMBANKMENT ON BOTH SIDES OF THE STRUCTURE.

STAGE 2

1. CONTINUE CONSTRUCTION OF STRUCTURE AND EMBANKMENT TO COMPLETION.

2. CONSTRUCT NEW ROADWAY PAVEMENT AND ENTRANCES.

3. REPLACE PAVEMENT MARKING AS NEEDED.

4. PLACE 4" TOPSOIL AND PERFORM FINAL LANDSCAPING.

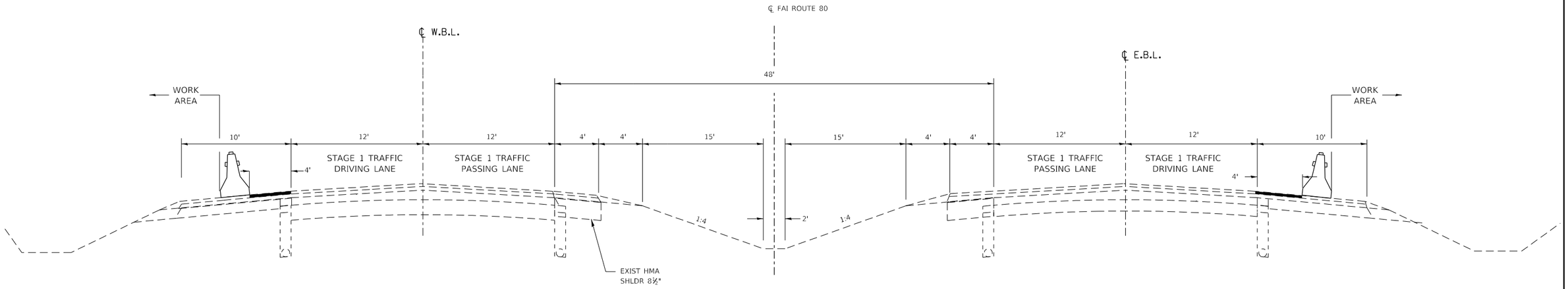

STAGE 1 TYPICAL (I–80)

(LOOKING EAST)

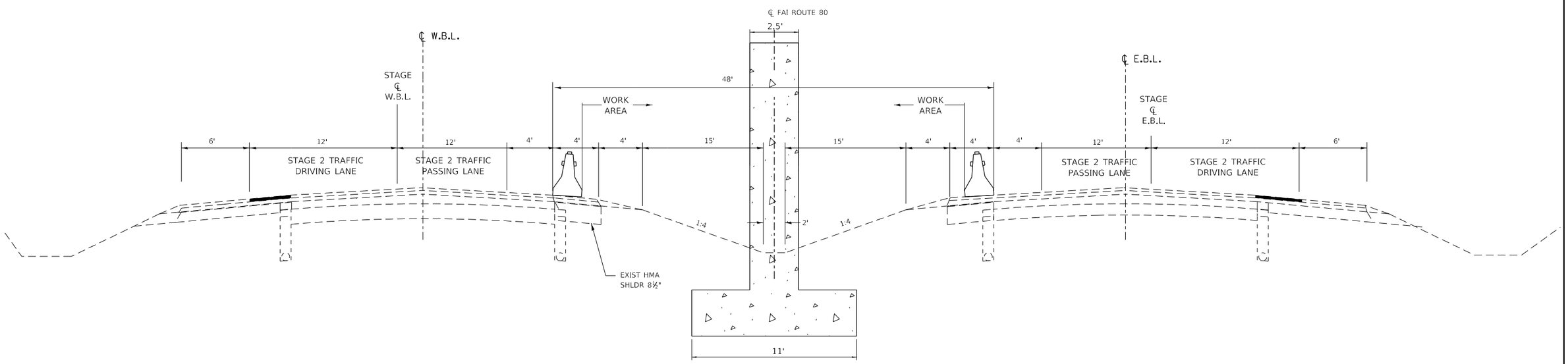

STAGE 2 TYPICAL (I–80)

(LOOKING EAST)

NOTES:

1. THE CONTRACTOR HAS THE OPTION OF USING EITHER THE LINE ON THE TEMPORARY CONCRETE BARRIER OR ON THE PAVEMENT.
2. THE COST OF THE REFLECTORS AND THE BARRIER/PAVEMENT MARKING LINE IS INCLUDED IN THE COST OF THE TEMPORARY CONCRETE BARRIER.

MODEL: $MODELNAME$
FILE NAME: c:\pw_work\pwidot\fergusonjh\d0318968\D366C59-sht-staging.dgn

USER NAME = fergusonjh	DESIGNED -	REVISED -	STATE OF ILLINOIS DEPARTMENT OF TRANSPORTATION
	DRAWN -	REVISED -	
PLOT SCALE = 100.0000 ' / in.	CHECKED -	REVISED -	
PLOT DATE = 10/21/2019	DATE -	REVISED -	

SUGGESTED MAINTENANCE OF TRAFFIC
GENERAL NOTES & SEQUENCE OF CONSTRUCTION

SCALE: | SHEET OF SHEETS | STA. TO STA.

F.A.I RTE.	SECTION	COUNTY	TOTAL SHEETS	SHEET NO.
80	(50-3)HBR-3	LASALLE	137	39
		66C59		
	ILLINOIS	FED. AID PROJECT		

STAGE 1 TRAFFIC CONTROL (I–80)

LEGEND

- DIRECTION OF TRAFFIC
- DRUMS WITH MONO-DIRECTIONAL STEADY BURNING LIGHTS @ 25' CENTERS ALONG TAPERS
- IMPACT ATTENUATOR, TEMPORARY (FULLY REDIRECTIVE)
- TEMPORARY CONCRETE BARRIER

NOTE: ALL TRAFFIC CONTROL ITEMS ITEMS EXCEPT TEMP CONCRETE BARRIER, TEMP PAVEMENT MARKING, PORTABLE CHANGEABLE MESSAGE SIGN AND IMPACT ATTENUATORS SHALL BE INCLUDED IN THE COST OF TRAFFIC CONTROL & PROTECTION (SPECIAL.)

TEMPORARY CONCRETE BARRIER	
NORMAL POSTED SPEED	TAPER RATIO
40 MPH & ABOVE	12:1
BELOW & 40 MPH	8:1

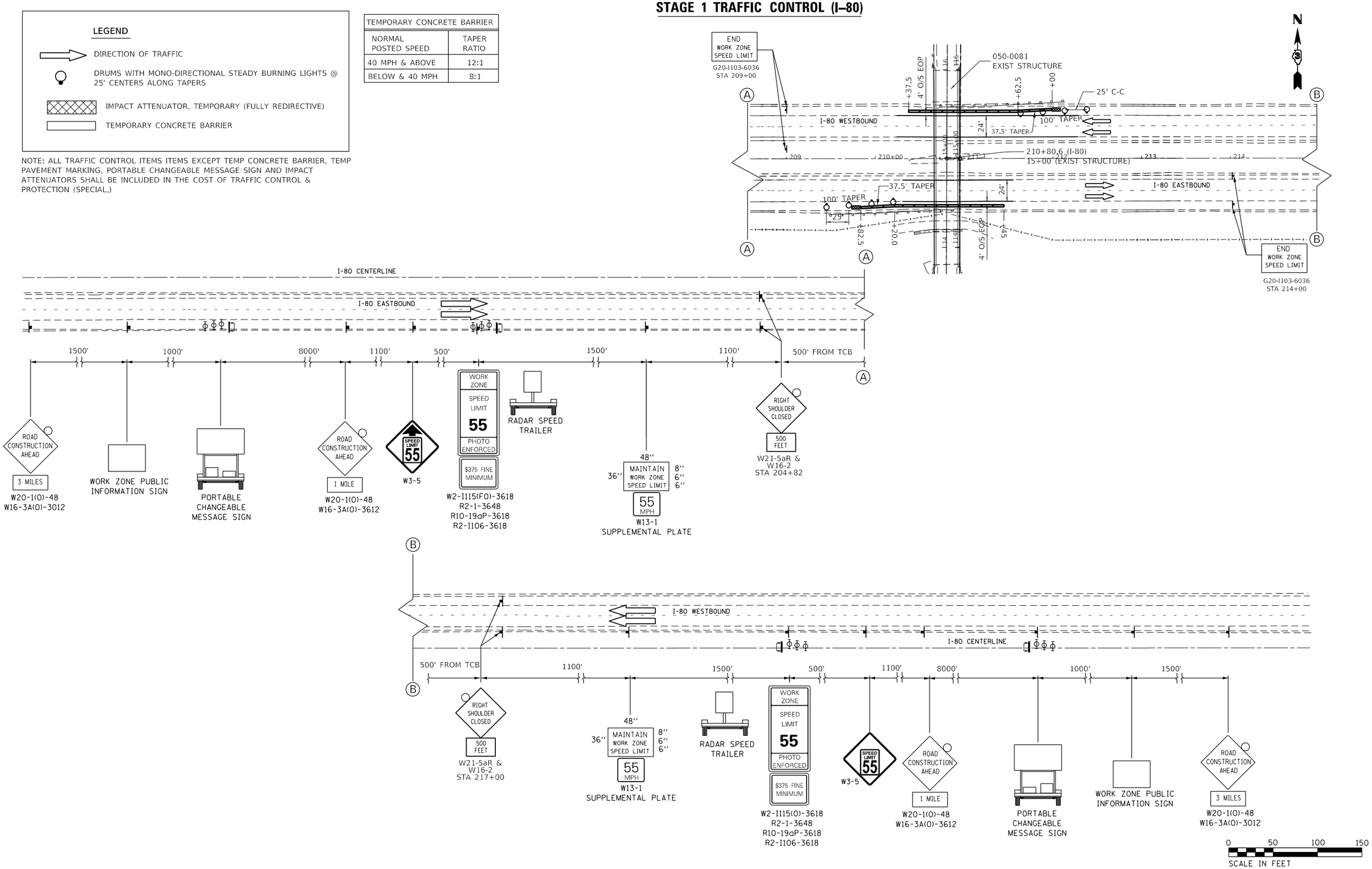

MODEL: $MODELNAME
FILE NAME: c:\pw_work\swilson1\fergusonjh\d0318968\D366C59-sht-staging.dgn

USER NAME = fergusonjh	DESIGNED -	REVISED -	
	DRAWN -	REVISED -	
PLOT SCALE = 100.0000 ' / in.	CHECKED -	REVISED -	
PLOT DATE = 10/21/2019	DATE -	REVISED -	

STATE OF ILLINOIS
DEPARTMENT OF TRANSPORTATION

SUGGESTED MAINTENANCE OF TRAFFIC
GENERAL NOTES & SEQUENCE OF CONSTRUCTION

SCALE: | SHEET OF SHEETS | STA. TO STA.

F.A.I RTE.	SECTION	COUNTY	TOTAL SHEETS	SHEET NO.
80	(50-3)HBR-3	LASALLE	137	40
		66C59		
		ILLINOIS	FED. AID PROJECT	

STAGE 2 TRAFFIC CONTROL (I–80)

LEGEND

- DIRECTION OF TRAFFIC
- DRUMS WITH MONO-DIRECTIONAL STEADY BURNING LIGHTS @ 25' CENTERS ALONG TAPERS
- IMPACT ATTENUATOR, TEMPORARY (FULLY REDIRECTIVE)
- TEMPORARY CONCRETE BARRIER
- (1) TEMP PAVT MARKING 4" SOLID WHITE
- (2) TEMP PAVT MARKING 4" SOLID YELLOW

TEMPORARY CONCRETE BARRIER	
NORMAL POSTED SPEED	TAPER RATIO
40 MPH & ABOVE	12:1
BELOW & 40 MPH	8:1

NOTE: ALL TRAFFIC CONTROL ITEMS ITEMS EXCEPT TEMP CONCRETE BARRIER, TEMP PAVEMENT MARKING, PORTABLE CHANGEABLE MESSAGE SIGN AND IMPACT ATTENUATORS SHALL BE INCLUDED IN THE COST OF TRAFFIC CONTROL & PROTECTION (SPECIAL.)

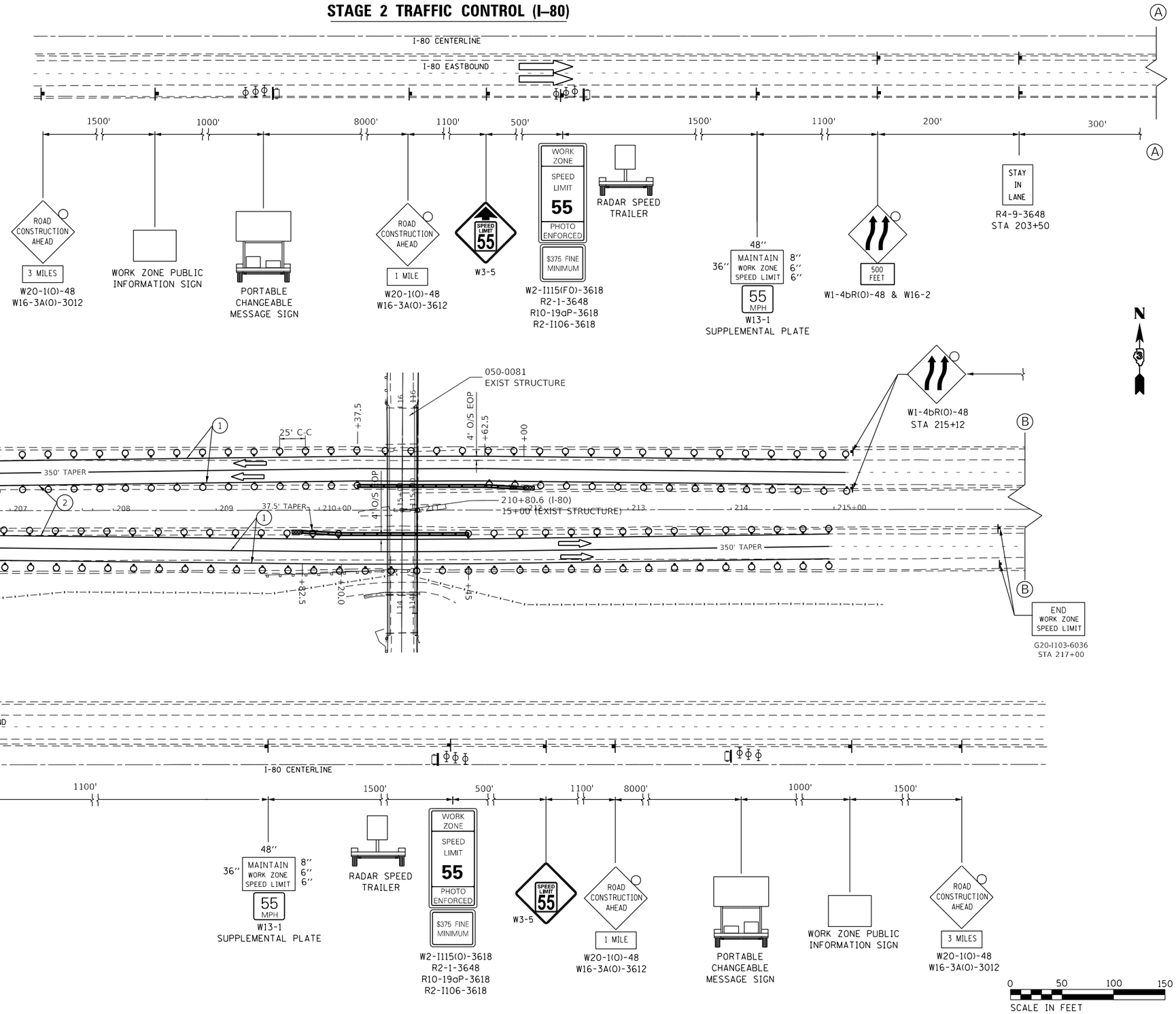

USER NAME = fergusonjh	DESIGNED -	REVISED -	STATE OF ILLINOIS DEPARTMENT OF TRANSPORTATION
	DRAWN -	REVISED -	
PLOT SCALE = 100.0000 ' / in.	CHECKED -	REVISED -	
PLOT DATE = 10/21/2019	DATE -	REVISED -	

SUGGESTED MAINTENANCE OF TRAFFIC
GENERAL NOTES & SEQUENCE OF CONSTRUCTION

SCALE: | SHEET OF SHEETS | STA. TO STA.

F.A.I RTE.	SECTION	COUNTY	TOTAL SHEETS	SHEET NO.
80	(50-3)HBR-3	LASALLE	137	41
		66C59		
		ILLINOIS	FED. AID PROJECT	

MODEL: $MODELNAMES
FILE NAME: c:\pw_work\uwidot\fergusonjh\d0318969\D366C59-sht-staging.dgn

EROSION CONTROL PLANS - SOUTH QUADRANT

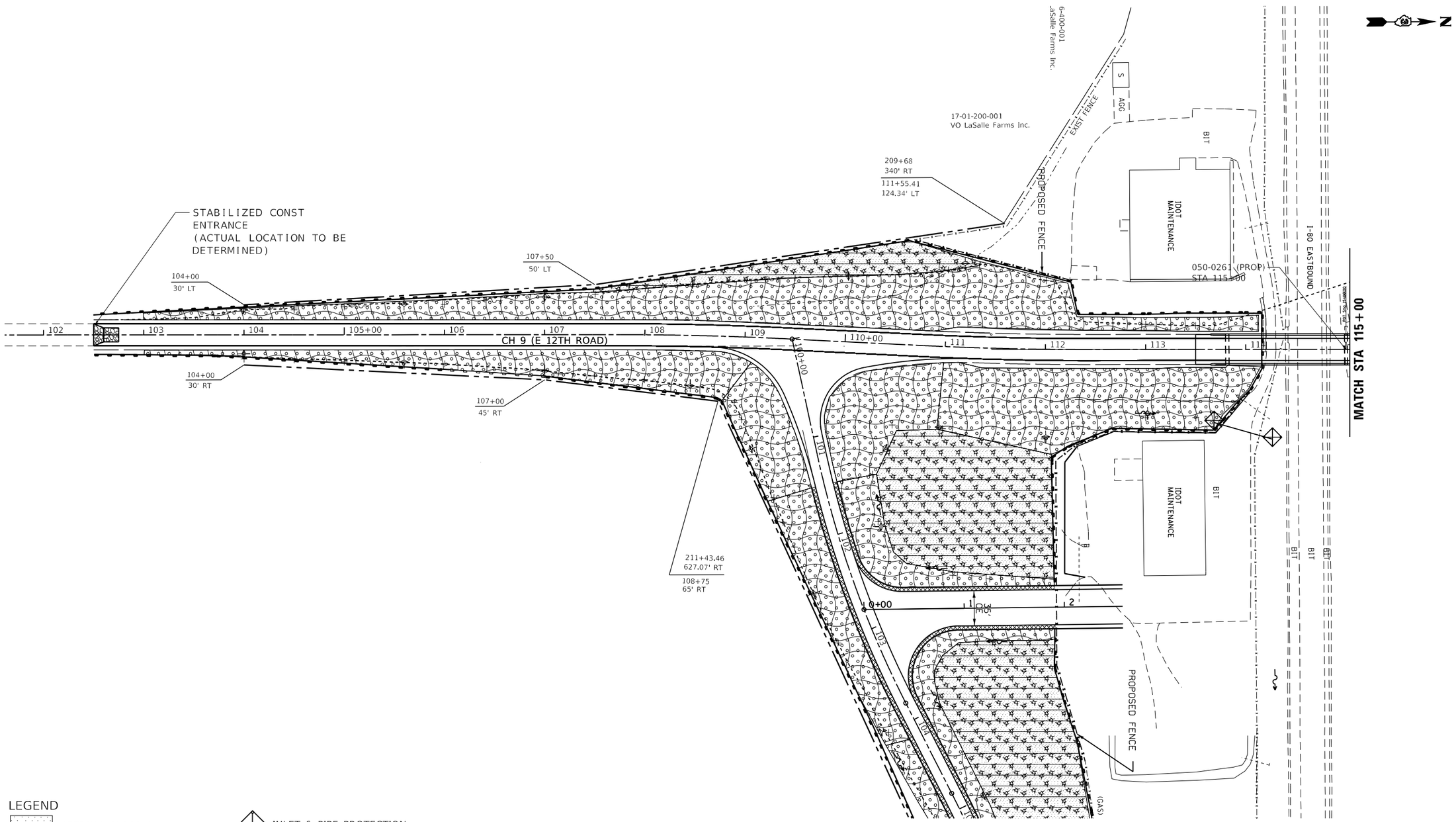

LEGEND

- SEEDING CLASS 4
- EROSION CONTROL BLANKET
- SEEDING CLASS 3
- SEEDING CLASS 2A
- INLET & PIPE PROTECTION
- TEMPORARY DITCH CHECK
- MULCH, METHOD 2
- PERIMETER EROSION BARRIER

FILE NAME = c:\pw_work\pwidot\fergusonjh\d0318968\D366c59-sht-landscape.dgn	USER NAME = fergusonjh	DESIGNED -	REVISED -
		DRAWN -	REVISED -
	PLOT SCALE = 100.0000 ' / in.	CHECKED -	REVISED -
	PLOT DATE = 10/21/2019	DATE -	REVISED -

STATE OF ILLINOIS
DEPARTMENT OF TRANSPORTATION

CH 9
EROSION CONTROL PLAN

SCALE: | SHEET OF SHEETS | STA. TO STA.

F.A.I. RTE.	SECTION	COUNTY	TOTAL SHEETS	SHEET NO.
80	(50-3)HBR-3	LASALLE	137	42

CONTRACT NO. 66C59

ILLINOIS FED. AID PROJECT

EROSION CONTROL PLANS – NORTH QUADRANT

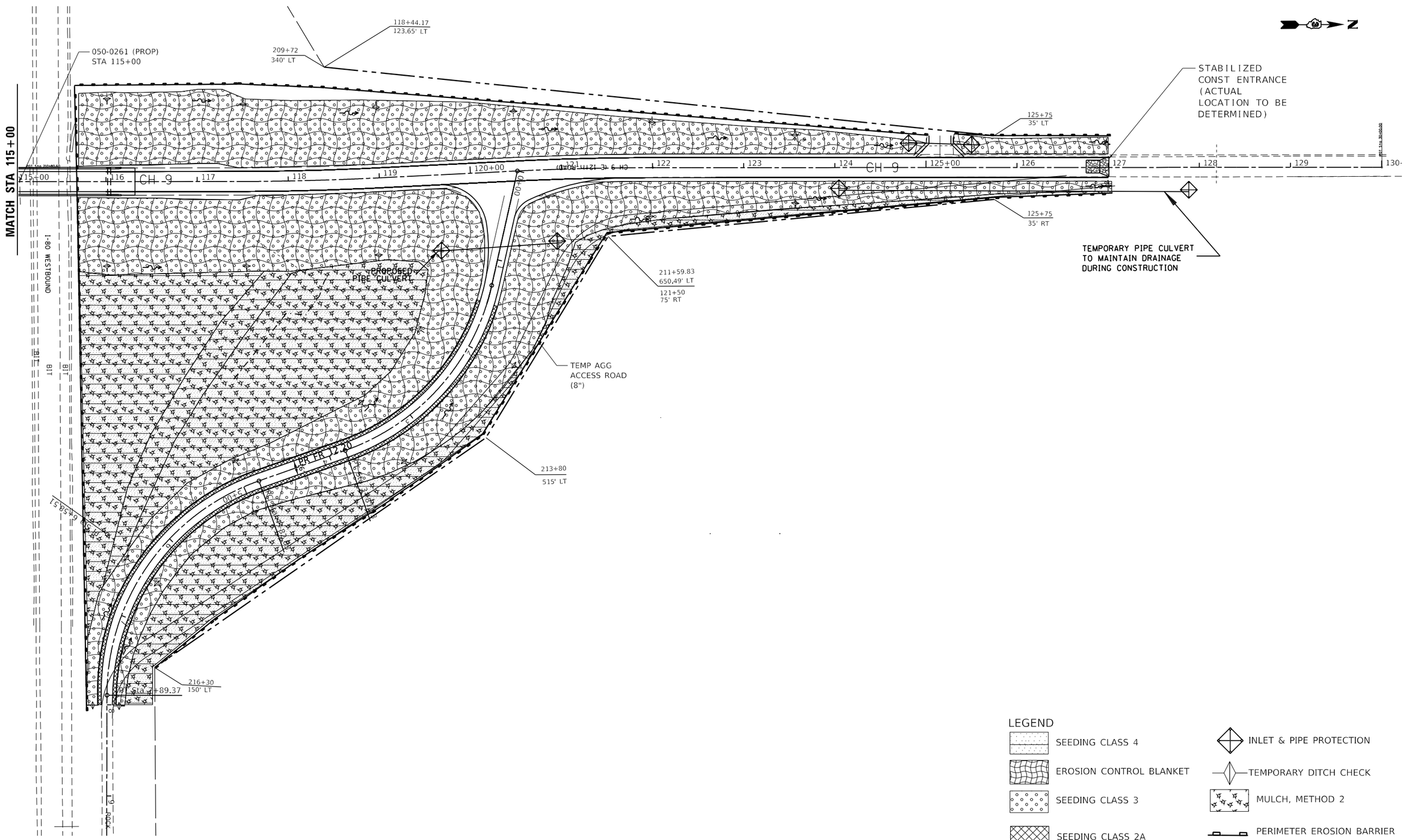

LEGEND

- SEEDING CLASS 4
- EROSION CONTROL BLANKET
- SEEDING CLASS 3
- SEEDING CLASS 2A
- INLET & PIPE PROTECTION
- TEMPORARY DITCH CHECK
- MULCH, METHOD 2
- PERIMETER EROSION BARRIER

FILE NAME =	USER NAME = fergusonjh	DESIGNED -	REVISED -
c:\pw_work\pwidot\fergusonjh\d0318968\D366c59-sht-landscape.dgn		DRAWN -	REVISED -
	PLOT SCALE = 100.0000 ' / in.	CHECKED -	REVISED -
	PLOT DATE = 10/21/2019	DATE -	REVISED -

STATE OF ILLINOIS
DEPARTMENT OF TRANSPORTATION

CH 9 & FR 12.20
EROSION CONTROL PLAN

SCALE: | SHEET OF SHEETS | STA. TO STA.

F.A.I. RTE.	SECTION	COUNTY	TOTAL SHEETS	SHEET NO.
80	(50-3)HBR-3	LASALLE	137	43

CONTRACT NO. 66C59

ILLINOIS FED. AID PROJECT

EROSION CONTROL PLANS – TR 289 (N 30TH RD)

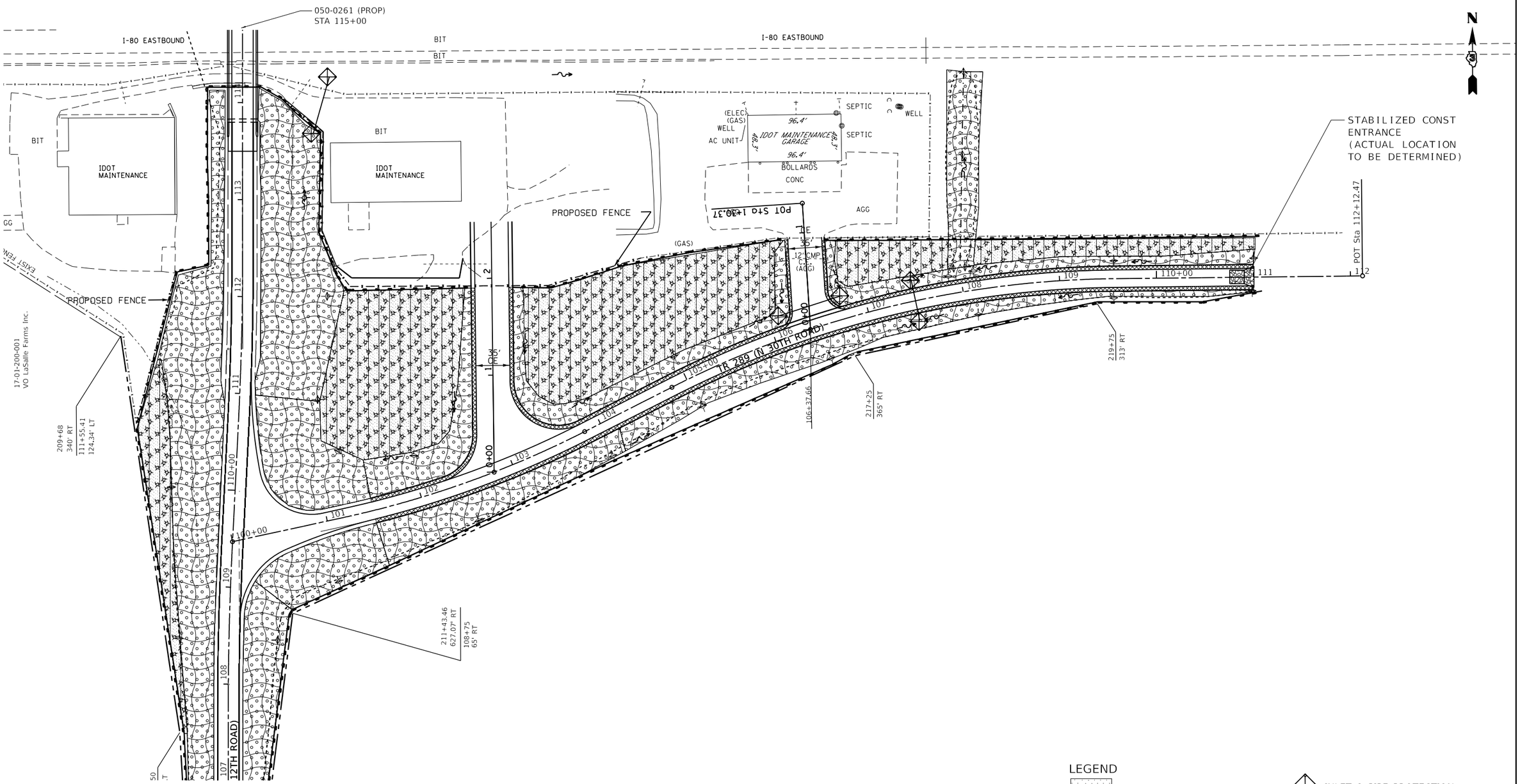

LEGEND

- SEEDING CLASS 4
- EROSION CONTROL BLANKET
- SEEDING CLASS 3
- SEEDING CLASS 2A
- INLET & PIPE PROTECTION
- TEMPORARY DITCH CHECK
- MULCH, METHOD 2
- PERIMETER EROSION BARRIER

FILE NAME = c:\pw_work\pwidot\fergusonjh\d0318968\D366c59-sht-landscape.dgn	USER NAME = fergusonjh	DESIGNED -	REVISED -	STATE OF ILLINOIS DEPARTMENT OF TRANSPORTATION	CH 9 & TR 289 EROSION CONTROL PLAN	F.A.I. RTE.	SECTION	COUNTY	TOTAL SHEETS	SHEET NO.
		DRAWN -	REVISED -			80	(50-3)HBR-3	LASALLE	137	44
	PLOT SCALE = 100.0000 ' / in.	CHECKED -	REVISED -					CONTRACT NO. 66C59		
	PLOT DATE = 10/21/2019	DATE -	REVISED -		SCALE: SHEET OF SHEETS STA. TO STA.		ILLINOIS FED. AID PROJECT			

IDOT BUILDING & FENCE PLAN

(EXISTING UTILITIES SHOWN)

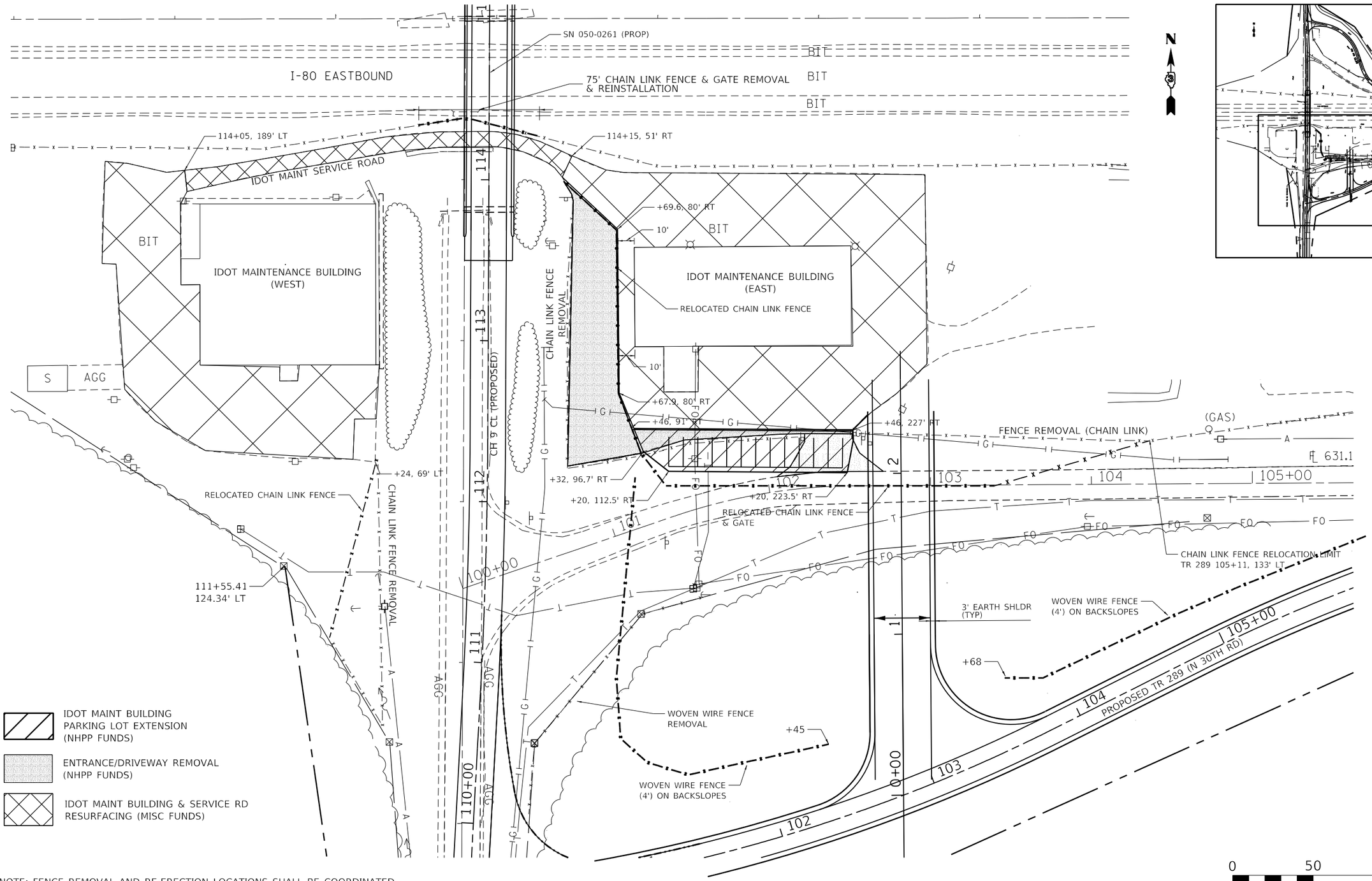

NOTE: FENCE REMOVAL AND RE-ERECTION LOCATIONS SHALL BE COORDINATED WITH IDOT BUILDING MANAGERS.

FILE NAME = c:\pw_work\pwidot\fergusonjh\d0318968\D366C59-sht-details.dgn	USER NAME = fergusonjh	DESIGNED -	REVISED -	STATE OF ILLINOIS DEPARTMENT OF TRANSPORTATION	IDOT BUILDING & FENCE DETAILS	F.A.I RTE.	SECTION	COUNTY	TOTAL SHEETS / SHEET NO.
	PLOT SCALE = 60.0000 ' / in.	DRAWN -	REVISED -			80	(50-3)HBR-3	LASALLE	137 / 45
	PLOT DATE = 10/21/2019	CHECKED -	REVISED -					CONTRACT NO. 66C59	
		DATE -	REVISED -		SCALE: SHEET OF SHEETS STA. TO STA.			ILLINOIS FED. AID PROJECT	

IDOT BUILDING & FENCE PLAN

(EXISTING UTILITIES SHOWN)

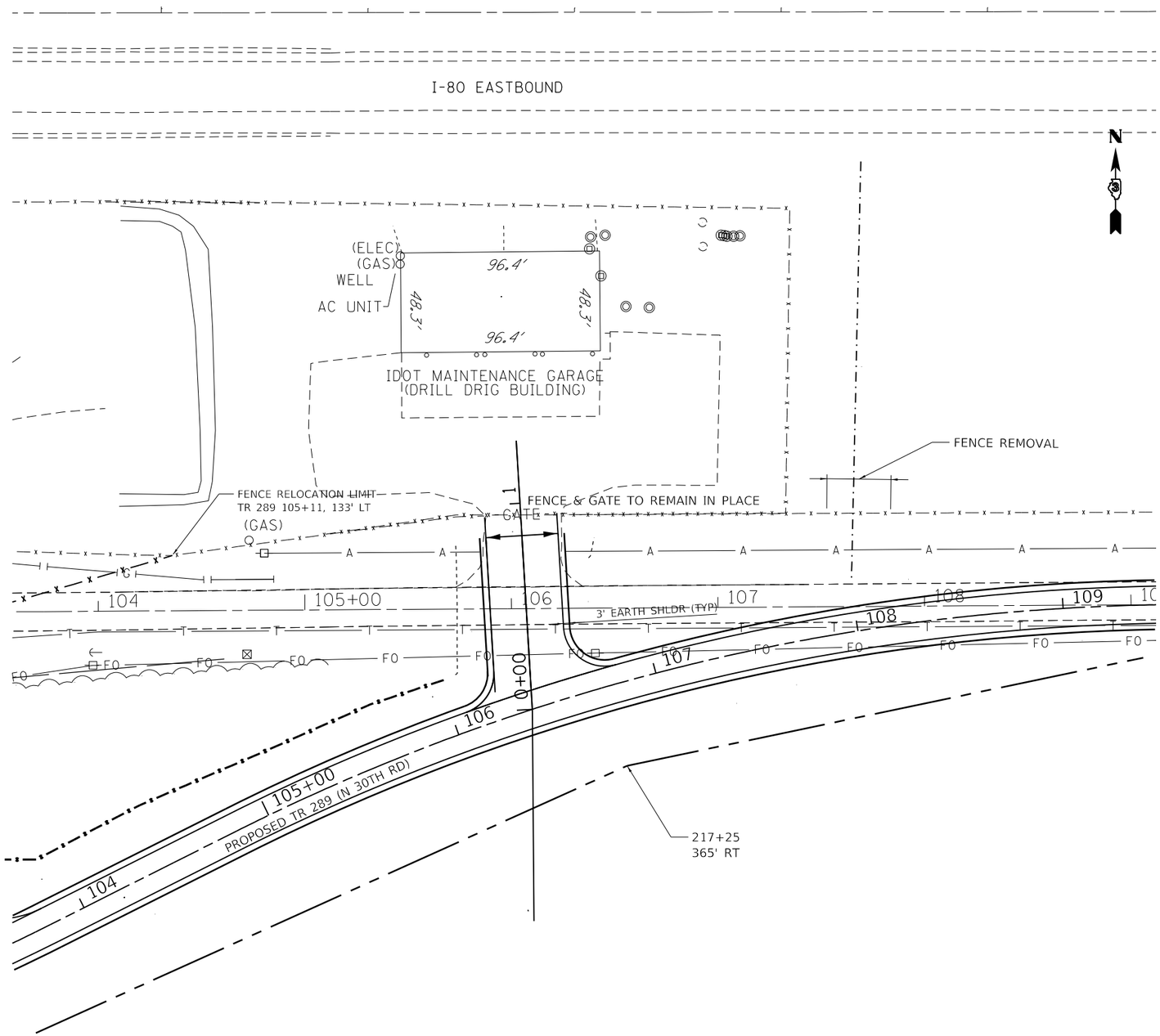

LOCATION

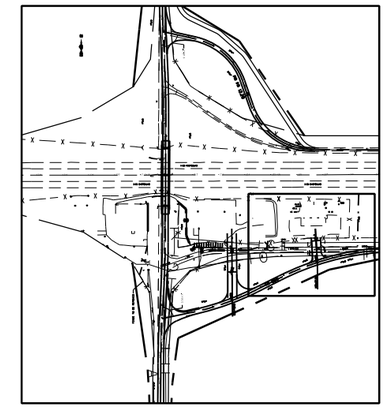

PARKING LOT DETAIL AT EAST IDOT BUILDING

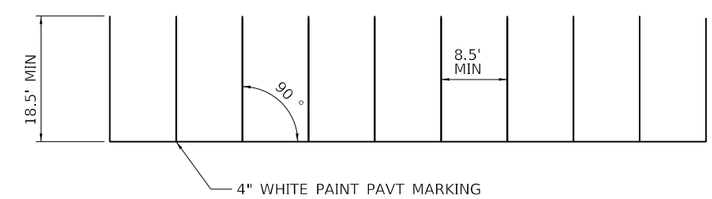

0 50 100 150

SCALE IN FEET

FILE NAME = c:\pw_work\pwidot\fergusonjh\d0318968\D366C59-sht-details.dgn	USER NAME = fergusonjh	DESIGNED -	REVISED -	STATE OF ILLINOIS DEPARTMENT OF TRANSPORTATION	IDOT BUILDING & FENCE DETAILS	F.A.I RTE. 80	SECTION (50-3)HBR-3	COUNTY LASALLE	TOTAL SHEETS 137 / SHEET NO. 46
		DRAWN -	REVISED -					CONTRACT NO. 66C59	
	PLOT SCALE = 60.0000 ' / in.	CHECKED -	REVISED -						
	PLOT DATE = 10/21/2019	DATE -	REVISED -		SCALE: SHEET OF SHEETS STA. TO STA.		ILLINOIS FED. AID PROJECT		

IDOT BUILDING & FENCE PLAN

(EXISTING UTILITIES SHOWN)

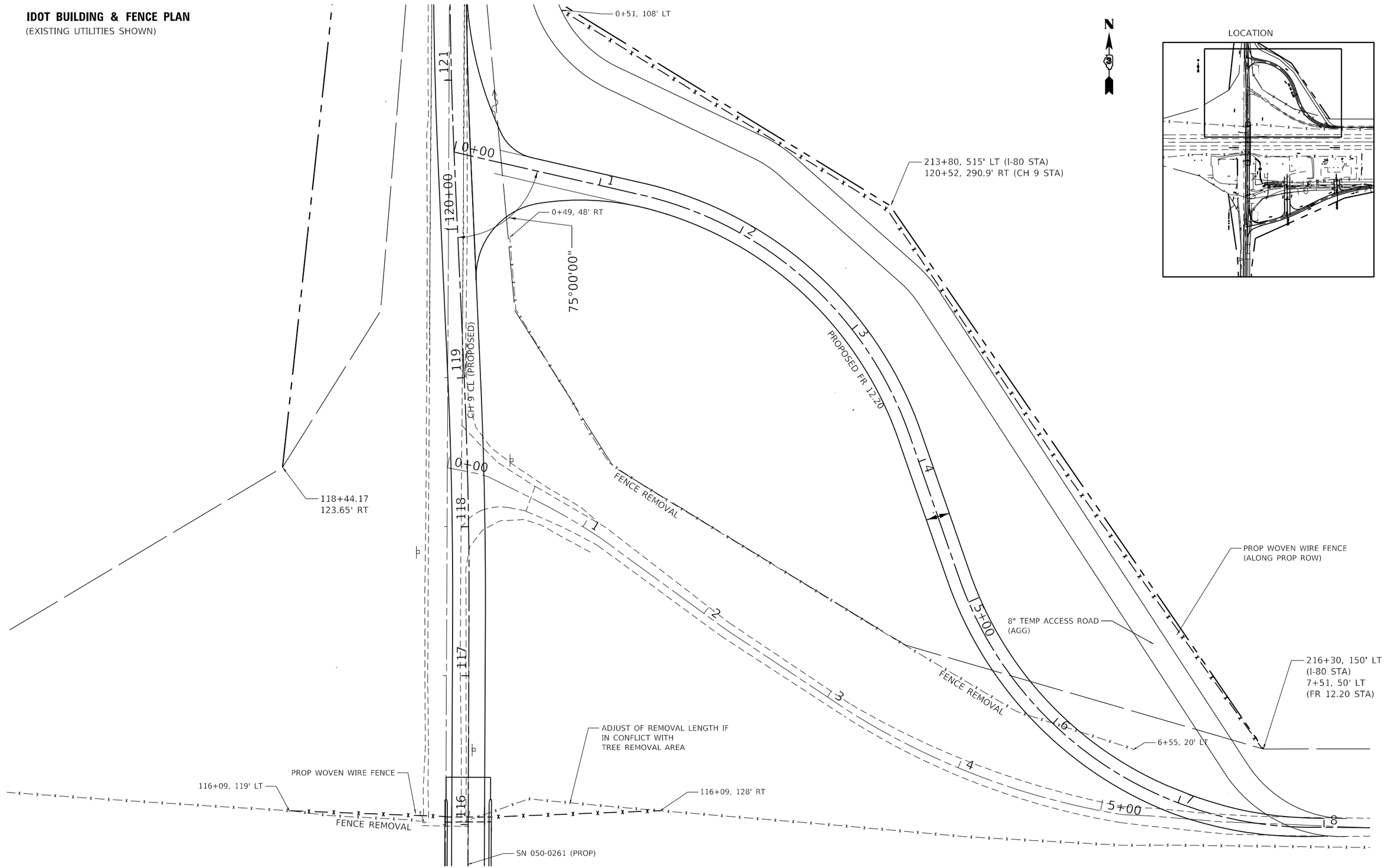

FILE NAME = c:\pw_work\pwidot\fergusonjh\d0318968\D366C59-sht-details.dgn	USER NAME = fergusonjh	DESIGNED -	REVISED -	STATE OF ILLINOIS DEPARTMENT OF TRANSPORTATION	IDOT BUILDING & FENCE DETAILS	F.A.I RTE.	SECTION	COUNTY	TOTAL SHEETS / SHEET NO.
		DRAWN -	REVISED -			80	(50-3)HBR-3	LASALLE	137 / 47
	PLOT SCALE = 60.0000 ' / in.	CHECKED -	REVISED -			CONTRACT NO. 66C59			
	PLOT DATE = 10/21/2019	DATE -	REVISED -		SCALE: SHEET OF SHEETS STA. TO STA.	ILLINOIS FED. AID PROJECT			

CH 9 ROAD CLOSURE DURING CONSTRUCTION

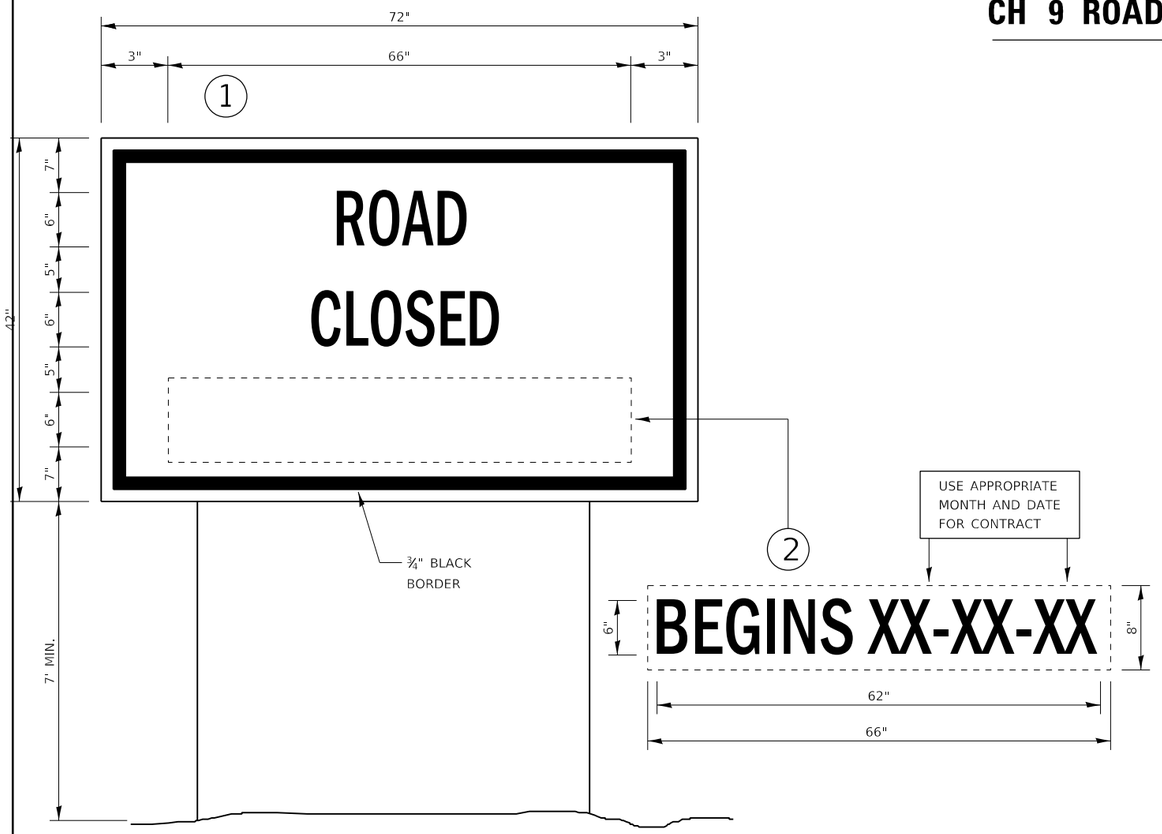

TEMPORARY INFORMATION SIGNING

NOTES:

1. USE 6" D BLACK LETTERING ON FLUORESCENT ORANGE BACKGROUND.
2. ERECT SIGNS AT LOCATIONS IN ADVANCE OF THE "ROAD CONSTRUCTION AHEAD" SIGNS AS DIRECTED BY THE ENGINEER.
3. ERECT SIGN (1) WITH INSTALLED PANEL (2) A MINIMUM OF ONE WEEK PRIOR TO THE START OF THE ROAD CLOSURE.
4. REMOVE PANEL (2) ON THAT DATE.
5. SEE SPECIAL PROVISION "TEMPORARY INFORMATION SIGNING" FOR ADDITIONAL INFORMATION.
6. WILL BE PAID FOR PER SQ FT AS "TEMPORARY INFORMATION SIGNING". EACH SIGN = 21 SQ FT AND THE DATE PANEL (2) WILL NOT BE MEASURED SEPARATELY FOR PAYMENT.

SEE HIGHWAY STANDARD BLR 21-9 FOR SIGN AND BARRICADE SPACING

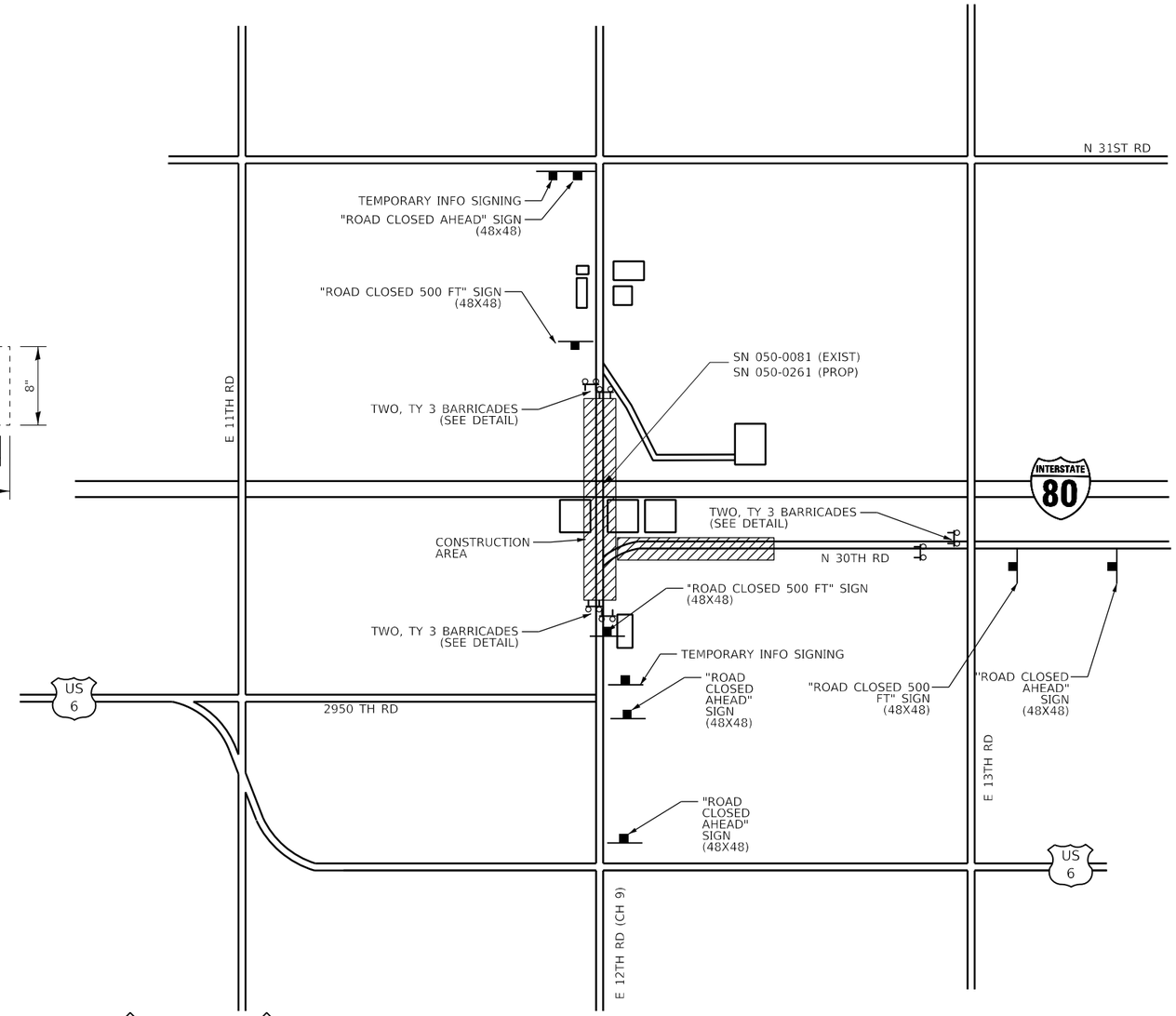

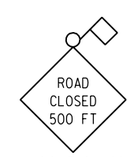

W20-3(O)-48

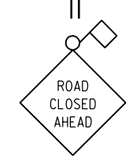

W20-3(O)-48

TYPE III BARRICADE (TYPICAL)

FILE NAME = c:\pw_work\pwidot\fergusonjh\d0318968\D366C59-sht-details.dgn	USER NAME = fergusonjh	DESIGNED -	REVISED -
		DRAWN -	REVISED -
	PLOT SCALE = 100.0000 ' / in.	CHECKED -	REVISED -
	PLOT DATE = 10/21/2019	DATE -	REVISED -

STATE OF ILLINOIS
DEPARTMENT OF TRANSPORTATION

CH 9 CLOSURE
DETAILS

SCALE: | SHEET OF SHEETS | STA. TO STA.

F.A.I RTE.	SECTION	COUNTY	TOTAL SHEETS	SHEET NO.
80	(50-3)HBR-3	LASALLE	137	48
		CONTRACT NO. 66C59		
	ILLINOIS FED. AID PROJECT			

WESTBOUND DETOUR

WESTBOUND DETOUR TRAFFIC CONTROL SIGNS			
ITEM NUMBER		SUGGESTED LOCATION (APPROX. DISTANCES)	SIGN FACE
1	T	1000' N OF I-80 WB ENTRANCE RAMP	SB
2	L	250' E OF IL 71, ON EXIT RAMP (AFFIXED TO SIGN)	WB
3	T	500' N OF US 6 & IL 71 EAST JUNCTION (AFFIXED TO STATE RTE SIGNS)	SB
4	L	E OF US 6 & IL 71 EAST JUNCTION, ON ISLAND (AFFIXED TO STATE RTE SIGNS)	WB
5	L	130' S OF US 6 & IL 71 & IL 23 JUNCTION (AFFIXED TO STATE RTE SIGNS)	NB
6	T	150' W OF PAUL ST (AFFIXED TO STATE RTE SIGNS)	WB
7	R	100' N OF US 6 & IL 71 & IL 23 JUNCTION (AFFIXED TO STATE RTE SIGNS)	SB
8	RT	250' S OF DELEON ST (AFFIXED TO SIGNS)	SB
9	L	250' E IL IL 23, ON EXIT RAMP (AFFIXED TO SIGN)	WB
10	T	500' N OF I-80 ENTRANCE (AFFIXED TO INTERSTAGE SIGNS) OR RELOCATE JUST NORTH OF I-80	SB
11	T	250' W OF US 6 & IL 71 & IL 23 JUNCTION	WB
12	T	.56 MI W OF CH 9 (AFFIXED TO REVERSE CURVE SIGN)	WB
13	RT	700' E OF US 6 & IL 178 INTERSECTION (AFFIXED TO STATE RTE SIGNS)	WB
14	R	225' E OF US 6 & IL 178 INTERSECTION (AFFIXED TO STATE RTE SIGNS)	WB
15	E	1100' N OF US 6 & IL 178 INTERSECTION (AFFIXED TO INTERSTATE RTE SIGN, SOUTH OF GAS STATION)	NB

GENERAL NOTES:

1 CHANGES TO LOCATION OF DETOUR SIGNS AND TRAFFIC CONTROL ITEMS MAY BE ADJUSTED BY THE ENGINEER.
2 SIGNS MAY REQUIRE AFFIXING TO EXISTING POSTS (AS PRACTICAL AS POSSIBLE), OTHERWISE SIGNS ARE TO BE POST MOUNTED.
3 CONTRACTOR SHALL BE RESPONSIBLE FOR MAINTAINING ALL SIGNAGE AT ALL TIMES.
4 DETOUR SIGNS SHALL BE COVERED WHEN NOT IN USE.
5 ALL SIGNS TO BE SUPPLIED BY THE CONTRACTOR.
6 THE USE OF THE INTERSTATE DYNAMIC MESSAGE BOARDS SHALL BE COORDINATED WITH THE DISTRICT OPERATIONS OFFICE.
7 ALL INTERSTATE CLOSURES SHALL REQUIRE COORDINATION AND ADVANCE NOTICE TO DISTRICT OPERATIONS AND STATE POLICE.
8 ITEMS SHOWN IN DETAILS INCLUDED IN COST OF DETOUR ROUTE SIGNING EXCEPT THE CHANGEABLE MESSAGE BOARDS

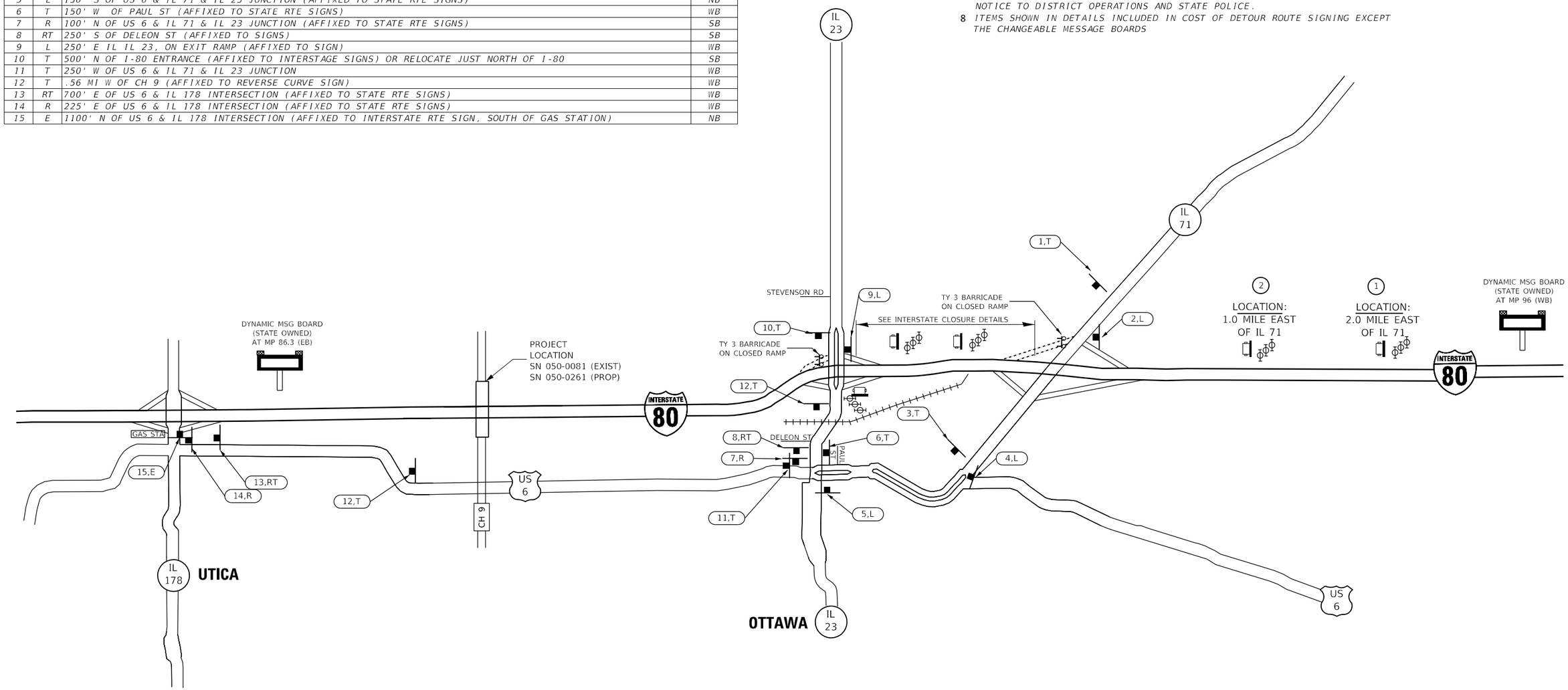

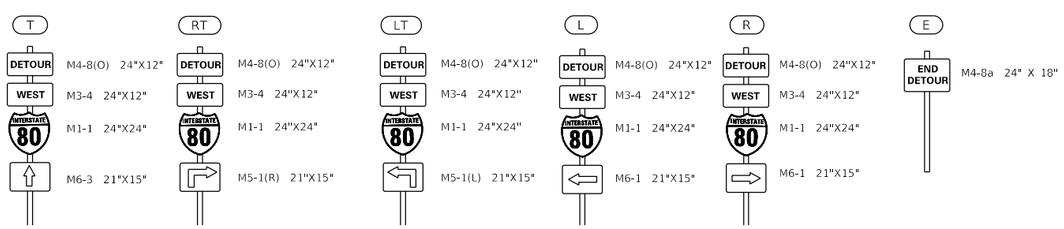

SUGGESTED PORTABLE MESSAGE SIGNS MESSAGES TO MOTORISTS

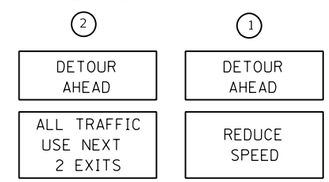

TYPE III BARRICADE (TYPICAL)

TY 3 BARRICADE WITH "ROAD CLOSED SIGN"

PORTABLE CHANGEABLE MESSAGE SIGNS

THREE, TY 2 BARRICADE, DRUM OR VERTICAL BARRICADES WITH MONODIRECTIONAL FLASHING LIGHT AT 25' CENTERS

NOTE:
DRAWING NOT TO SCALE

FILE NAME = c:\pw_work\pwidot\calderonl\d0318968\D366C59-sht-details.dgn	USER NAME = calderonl	DESIGNED -	REVISED -
		DRAWN -	REVISED -
	PLOT SCALE = 100.0000 ' / in.	CHECKED -	REVISED -
	PLOT DATE = 11/1/2019	DATE -	REVISED -

STATE OF ILLINOIS
DEPARTMENT OF TRANSPORTATION

DETOUR (WESTBOUND)
DETAILS

SCALE: SHEET OF SHEETS STA. TO STA.

F.A.I RTE.	SECTION	COUNTY	TOTAL SHEETS	SHEET NO.
80	(50-3)HBR-3	LASALLE	137	49
		CONTRACT NO. 66C59		
	ILLINOIS	FED. AID PROJECT		

EASTBOUND DETOUR

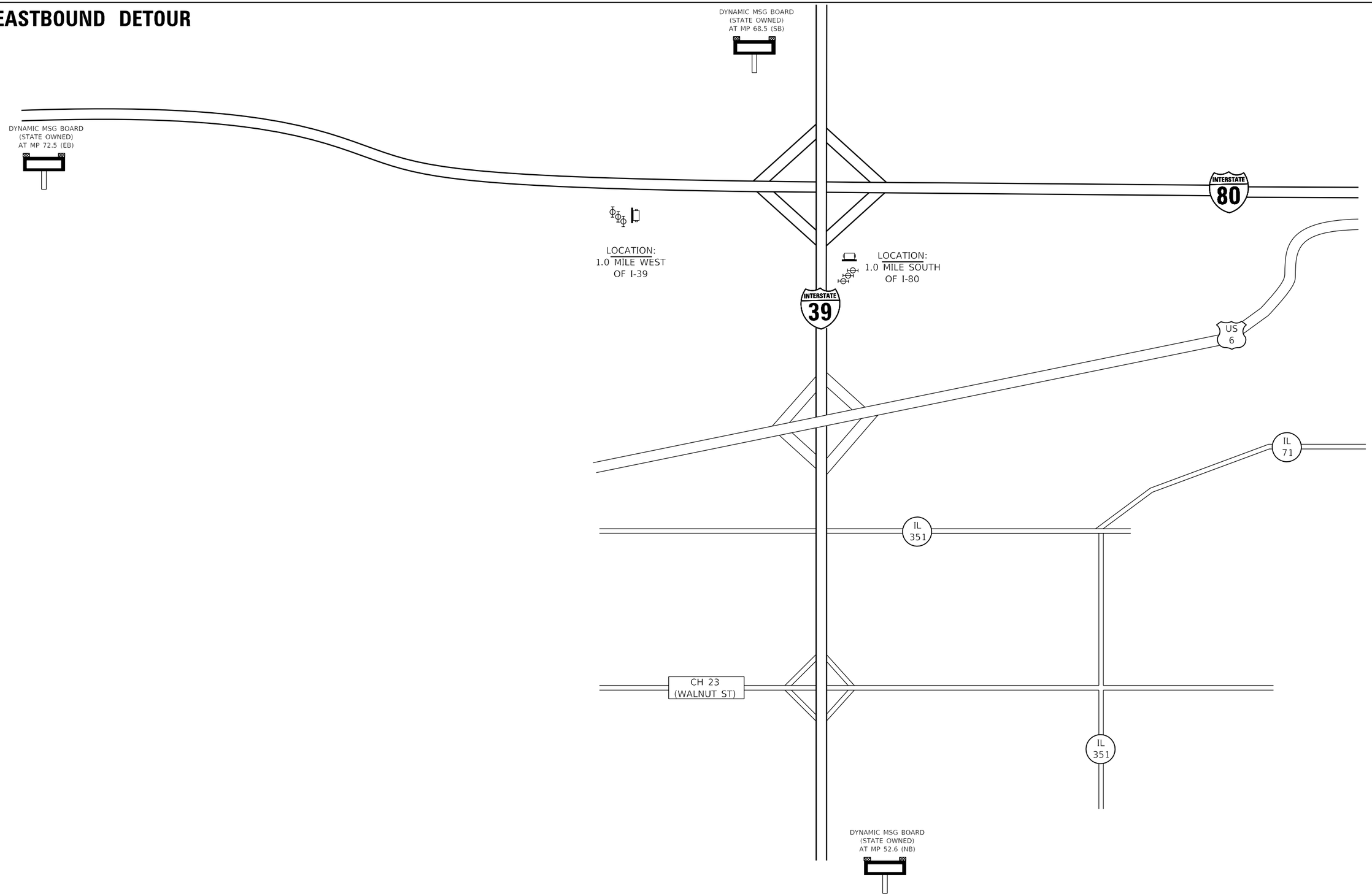

FILE NAME = c:\pw_work\pwidot\fergusonjh\d0318968\D366C59-sht-details.dgn	USER NAME = fergusonjh	DESIGNED -	REVISED -
		DRAWN -	REVISED -
	PLOT SCALE = 100.0000 ' / in.	CHECKED -	REVISED -
	PLOT DATE = 10/21/2019	DATE -	REVISED -

STATE OF ILLINOIS
DEPARTMENT OF TRANSPORTATION

DETOUR (EASTBOUND)
DETAILS

SCALE: | SHEET OF SHEETS | STA. TO STA.

F.A.I RTE.	SECTION	COUNTY	TOTAL SHEETS	SHEET NO.
80	(50-3)HBR-3	LASALLE	137	50
		CONTRACT NO. 66C59		
		ILLINOIS FED. AID PROJECT		

EASTBOUND DETOUR

EASTBOUND DETOUR TRAFFIC CONTROL SIGNS			
ITEM NUMBER		SUGGESTED LOCATION (APPROX. DISTANCES)	SIGN FACE
1	R	ON EXIT RAMP (AFFIXED TO SIGN)	WB
2	LT	500' N OF US 6 & IL 178 INTERSECTION	SB
3	L	200' N OF US 6 & IL 178 INTERSECTION (AFFIXED TO STATE RTE SIGNS)	SB
4	R	180' S OF US 6 & IL 178 INTERSECTION (AFFIXED TO STATE RTE SIGNS)	NB
5	T	0.6 MI E OD E 10TH RD (AFFIXED TO REVERSE CURVE)	WB
6	T	100' E OF E 13TH RD (AFFIXED TO STATE SIGN)	WB
7	T	100' E OF US 6 & IL 71 & IL 23 JUNCTION (AFFIXED TO STATE RTE SIGNS)	WB
8	T	140' S OF US 6 & IL 71 EAST JUNCTION	NB
9	E	0.20 MI S OF EB ENTRANCE RAMP (AFFIXED TO INTERSTATE RTE SIGN, JUST SOUTH OF RESTAURANT)	NB

GENERAL NOTES:

1 CHANGES TO LOCATION OF DETOUR SIGNS AND TRAFFIC CONTROL ITEMS MAY BE ADJUSTED BY THE ENGINEER.
2 SIGNS MAY REQUIRE AFFIXING TO EXISTING POSTS (AS PRACTICAL AS POSSIBLE), OTHERWISE SIGNS ARE TO BE POST MOUNTED.
3 CONTRACTOR SHALL BE RESPONSIBLE FOR MAINTAINING ALL SIGNAGE AT ALL TIMES.
4 DETOUR SIGNS SHALL BE COVERED WHEN NOT IN USE.
5 ALL SIGNS TO BE SUPPLIED BY THE CONTRACTOR.
6 THE USE OF THE INTERSTATE DYNAMIC MESSAGE BOARDS SHALL BE COORDINATED WITH THE DISTRICT OPERATIONS OFFICE.
7 ALL INTERSTATE CLOSURES SHALL REQUIRE COORDINATION AND ADVANCE NOTICE TO DISTRICT OPERATIONS AND STATE POLICE.
8 ITEMS SHOWN IN DETAILS INCLUDED IN COST OF DETOUR ROUTE SIGNING EXCEPT THE CHANGEABLE MESSAGE BOARDS

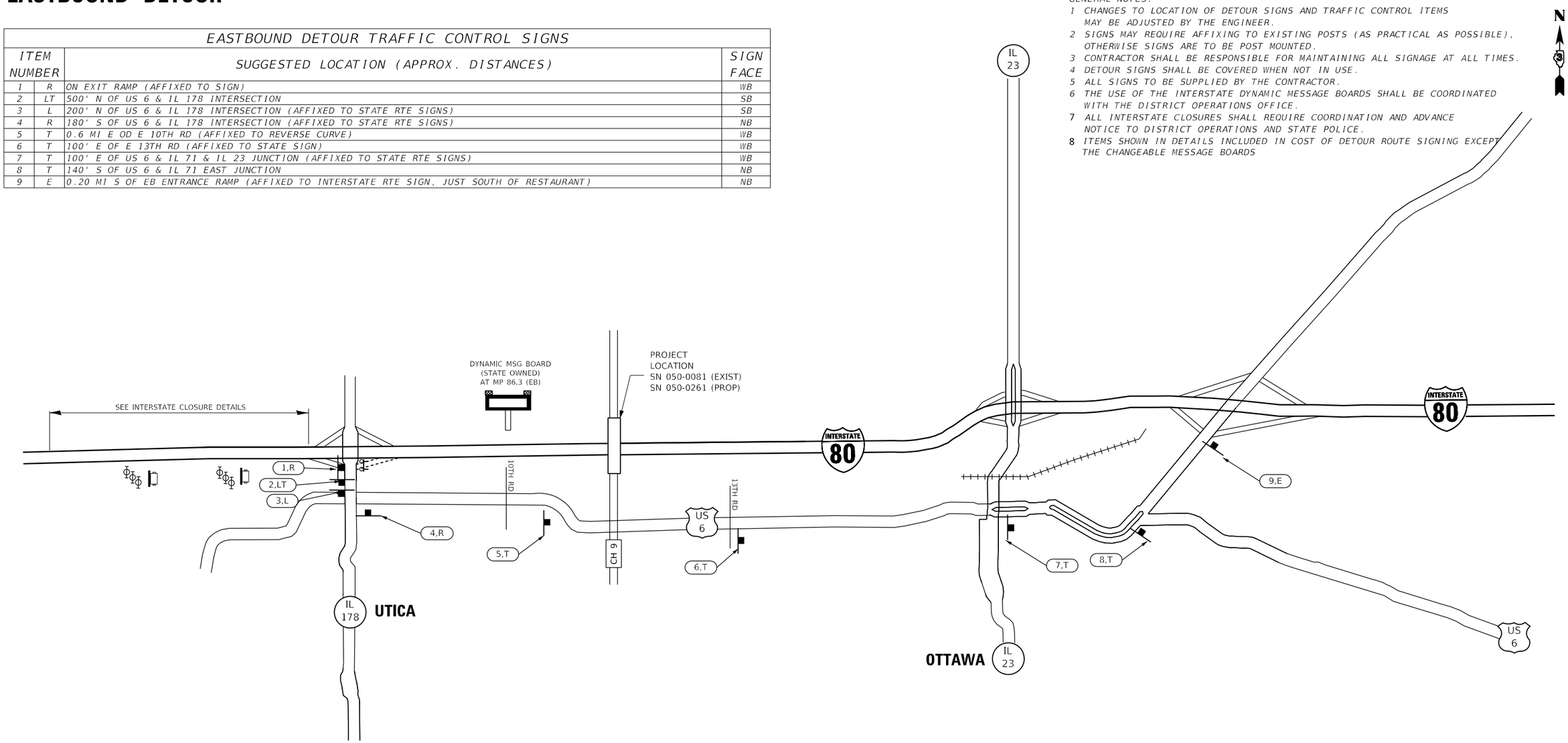

TYPE III BARRICADE (TYPICAL)

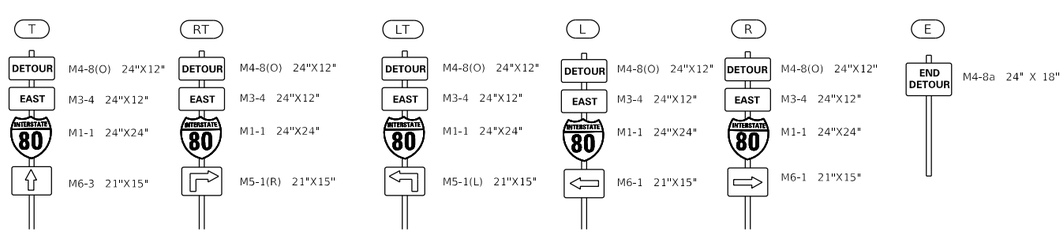

FILE NAME = c:\pw_work\pwidot\calderonl\d0318968\D366C59-sht-details.dgn	USER NAME = calderonl	DESIGNED -	REVISED -
		DRAWN -	REVISED -
	PLOT SCALE = 100.0000 ' / in.	CHECKED -	REVISED -
	PLOT DATE = 11/1/2019	DATE -	REVISED -

STATE OF ILLINOIS
DEPARTMENT OF TRANSPORTATION

DETOUR (EASTBOUND)
DETAILS

SCALE: | SHEET OF SHEETS | STA. TO STA.

F.A.I RTE.	SECTION	COUNTY	TOTAL SHEETS	SHEET NO.
80	(50-3)HBR-3	LASALLE	137	51
		CONTRACT NO. 66C59		
		ILLINOIS FED. AID PROJECT		

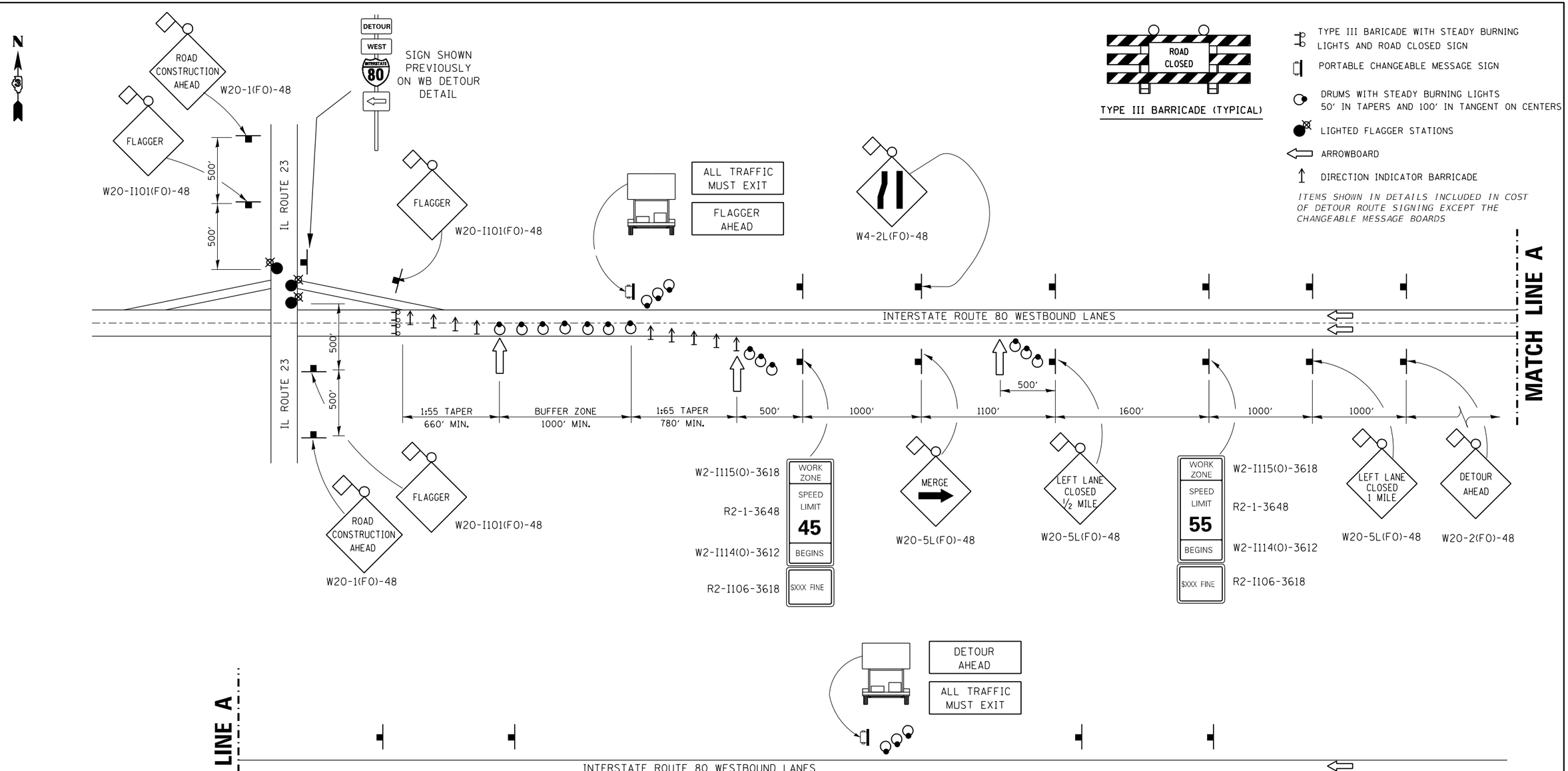

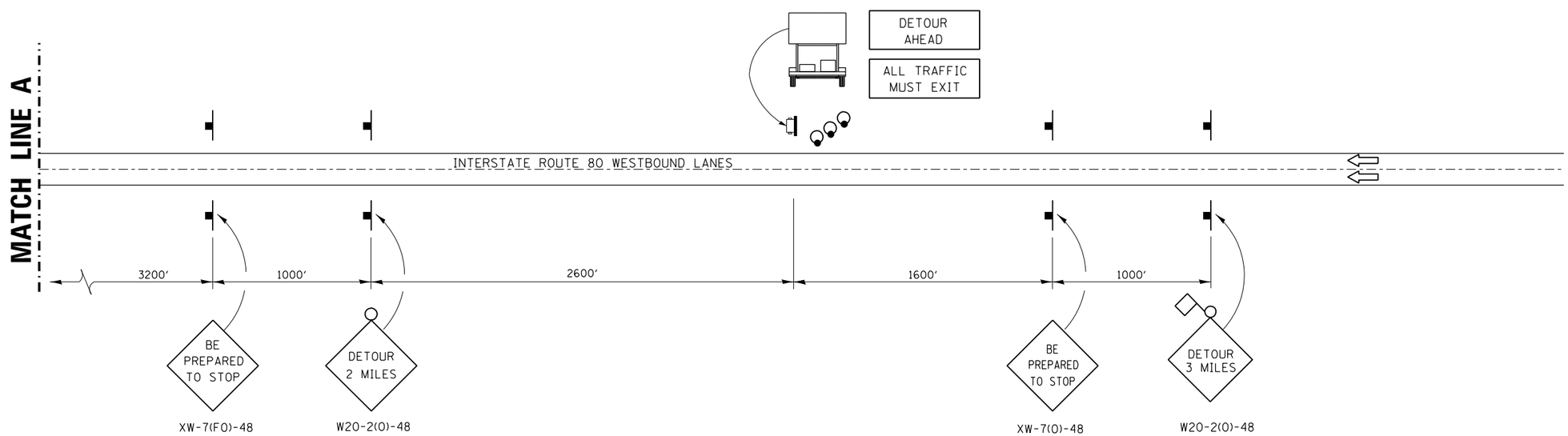

FILE NAME = c:\pw_work\pwidot\fergusonjh\d0318968\D366C59-sht-details.dgn	USER NAME = fergusonjh	DESIGNED -	REVISED -
		DRAWN -	REVISED -
	PLOT SCALE = 100.0000 ' / in.	CHECKED -	REVISED -
	PLOT DATE = 10/21/2019	DATE -	REVISED -

STATE OF ILLINOIS
DEPARTMENT OF TRANSPORTATION

INTERSTATE CLOSURE AT NIGHT (I-80 WB) – ALL TRAFFIC MUST EXIT
DETOUR DETAILS

SCALE: SHEET OF SHEETS STA. TO STA.

F.A.I RTE.	SECTION	COUNTY	TOTAL SHEETS	SHEET NO.
80	(50-3)HBR-3	LASALLE	137	52

CONTRACT NO. 66C59

ILLINOIS FED. AID PROJECT

TYPE III BARICADE WITH STEADY BURNING LIGHTS AND ROAD CLOSED SIGN

PORTABLE CHANGEABLE MESSAGE SIGN

DRUMS WITH STEADY BURNING LIGHTS 50' IN TAPERS AND 100' IN TANGENT ON CENTERS

LIGHTED FLAGGER STATIONS

ARROWBOARD

DIRECTION INDICATOR BARRICADE

ITEMS SHOWN IN DETAILS INCLUDED IN COST OF DETOUR ROUTE SIGNING EXCEPT THE CHANGEABLE MESSAGE BOARDS

TYPE III BARRICADE (TYPICAL)

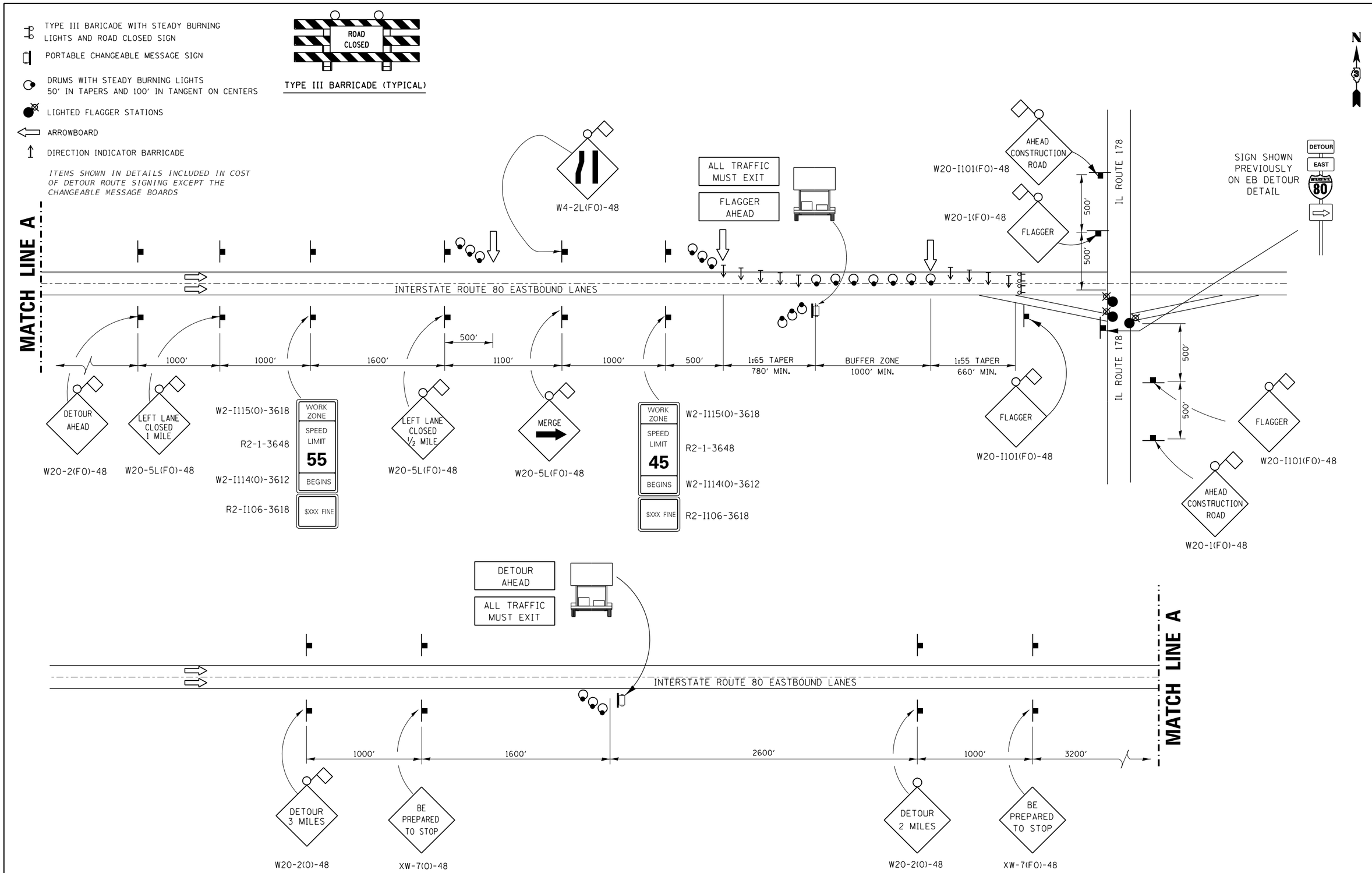

FILE NAME = c:\pw_work\pwidot\fergusonjh\d0318968\D366C59-sht-details.dgn	USER NAME = fergusonjh	DESIGNED -	REVISED -
		DRAWN -	REVISED -
	PLOT SCALE = 100.0000 ' / in.	CHECKED -	REVISED -
	PLOT DATE = 10/21/2019	DATE -	REVISED -

STATE OF ILLINOIS
DEPARTMENT OF TRANSPORTATION

INTERSTATE CLOSURE AT NIGHT (I-80 EB) - ALL TRAFFIC MUST EXIT
DETOUR DETAILS

SCALE: | SHEET OF SHEETS | STA. TO STA.

F.A.I RTE.	SECTION	COUNTY	TOTAL SHEETS	SHEET NO.
80	(50-3)HBR-3	LASALLE	137	53

CONTRACT NO. 66C59

ILLINOIS FED. AID PROJECT

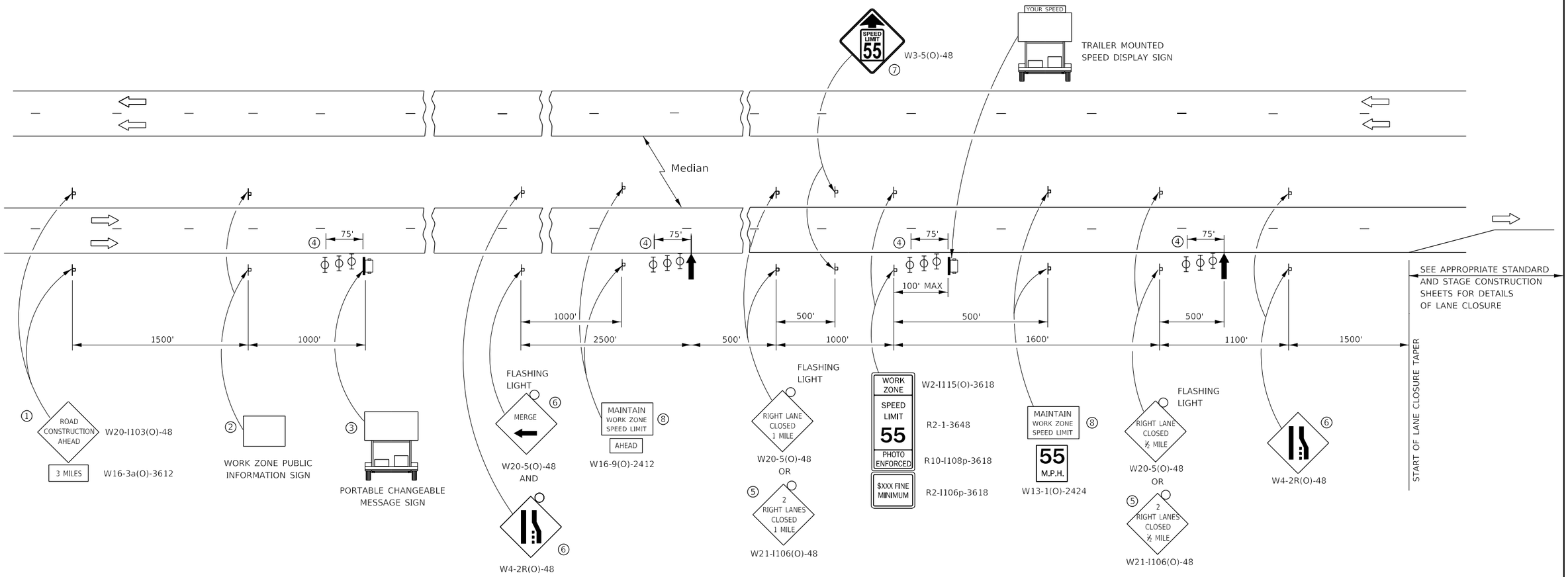

① THE ROAD CONSTRUCTION AHEAD SIGN SHALL BE LOCATED 3 MILES IN ADVANCE OF THE PROJECT LIMITS.

② THE MESSAGE AND SIZE OF THE WORK ZONE PUBLIC INFORMATION SIGN SHALL BE AS SPECIFIED BY THE DEPARTMENT.

③ TO BE PLACED IN THE MEDIAN WHEN FEASIBLE. THE MESSAGE BOARD SHALL BE USED TO DISPLAY STATUS OF LANES WITHIN THE PROJECT. THE PRIMARY MESSAGES SHALL BE:
"RIGHT LANE CLOSED" / " x MILES AHEAD"
"LEFT LANE CLOSED" / " x MILES AHEAD"
"ALL LANES OPEN"

④ THREE, TYPE II BARRICADES, DRUMS, OR VERTICAL BARRICADES AT 25' CENTERS.

⑤ THIS SIGN SHALL BE USED WHEN 2 LANES ARE CLOSED.

⑥ WHEN THE LEFT LANE IS CLOSED, SWITCH THESE TWO SIGNS AND THE DIRECTION OF THE MERGE ARROW.

⑦ THIS SIGN SHALL ONLY BE USED IF THE EXISTING SPEED LIMIT IS GREATER THAN 65 MPH.

⑧ 48"x36" FLUORESCENT ORANGE SIGN WITH BLACK LETTERS.

48"

36"	MAINTAIN	8"
	WORK ZONE	6"
	SPEED LIMIT	6"

ARROW BOARD

PORTABLE CHANGEABLE MESSAGE SIGN

SIGN

TYPE II BARRICADE, DRUM, OR VERTICAL BARRICADE WITH MONODIRECTIONAL FLASHING LIGHT

GENERAL NOTE:

THIS STANDARD IS USED WHERE AT ANY TIME A LANE IS CLOSED ON A FREEWAY/EXPRESSWAY.

WHEN THE LEFT LANE IS CLOSED, LEFT LANE CLOSED SIGNS SHALL BE SUBSTITUTED FOR THE RIGHT LANE CLOSED SIGNS.

THE FIRST TWO SIGNS AND THE MESSAGE BOARD ARE STATIONARY. THE OTHER SIGNS AND ARROWBOARDS SHALL BE MOVED AS NECESSARY TO MAINTAIN THE REQUIRED DISTANCE FROM THE START OF THE LANE CLOSURE TAPER(S).

SEE SPECIAL PROVISIONS.

ALL DIMENSIONS ARE IN INCHES UNLESS OTHERWISE SHOWN.

FILE NAME = c:\pw_work\pwidot\fergusonjh\d0318968\D366C59-sht-details.dgn	USER NAME = fergusonjh	DESIGNED -	REVISED -
		DRAWN -	REVISED -
	PLOT SCALE = 100.0000 ' / in.	CHECKED -	REVISED -
	PLOT DATE = 10/21/2019	DATE -	REVISED -

STATE OF ILLINOIS
DEPARTMENT OF TRANSPORTATION

STANDARD 701400 SPECIAL DETAILS

SCALE: | SHEET OF SHEETS | STA. TO STA.

F.A.I RTE.	SECTION	COUNTY	TOTAL SHEETS	SHEET NO.
80	(50-3)HBR-3	LASALLE	137	54

CONTRACT NO. 66C59

ILLINOIS FED. AID PROJECT

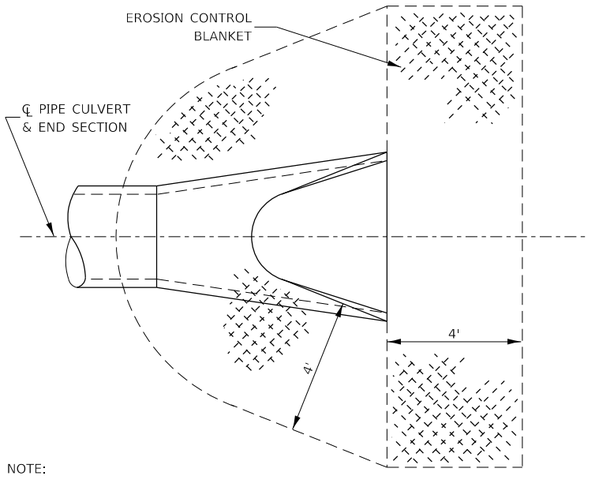

NOTE:
TO BE USED AT ALL END SECTIONS

DETAIL OF EROSION CONTROL BLANKET LINING AROUND END SECTION

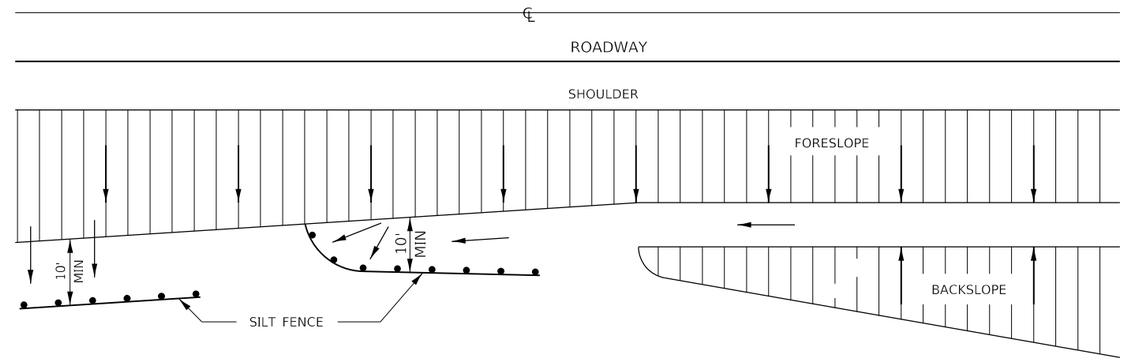

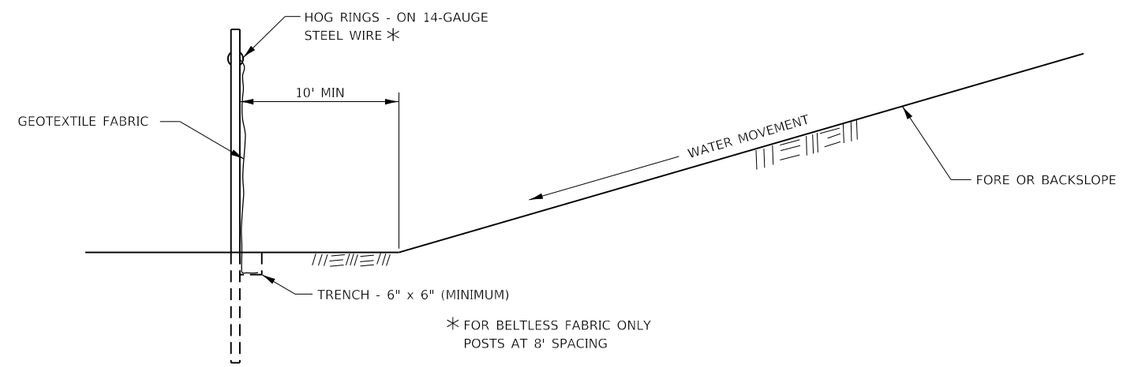

DETAILS OF SILT FENCE

EROSION CONTROL DETAILS FOR SILT FENCE

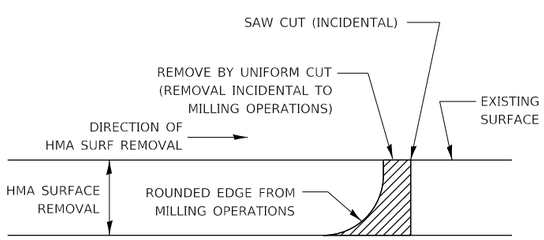

NOTE:

WHEN MILLING OPERATIONS PRODUCE A ROUNDED EDGE, THEN A SAW CUT SHALL BE USED TO MANUFACTURE A PERPENDICULAR EDGE AS SHOWN IN THE DETAIL. THE ENGINEER SHALL BE THE SOLE JUDGE CONCERNING THE USE OF THIS DETAIL

HMA DETAIL AT BUTT JOINTS

FILE NAME =	USER NAME = fergusonjh	DESIGNED -	REVISED -	STATE OF ILLINOIS DEPARTMENT OF TRANSPORTATION	DETAILS	F.A.I RTE.	SECTION	COUNTY	TOTAL SHEETS / SHEET NO.
c:\pw_work\pwidot\fergusonjh\d0318968\D366C59-sht-details.dgn		DRAWN -	REVISED -			80	(50-3)HBR-3	LASALLE	137 / 55
	PLOT SCALE = 100.0000 ' / in.	CHECKED -	REVISED -					CONTRACT NO. 66C59	
	PLOT DATE = 10/21/2019	DATE -	REVISED -		SCALE: SHEET OF SHEETS STA. TO STA.		ILLINOIS FED. AID PROJECT		

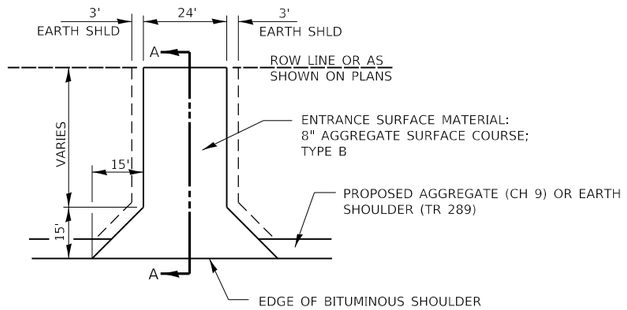

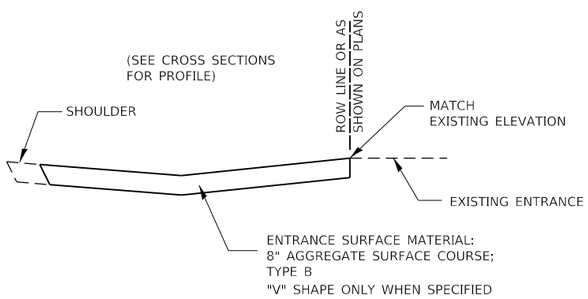

SECTION A-A

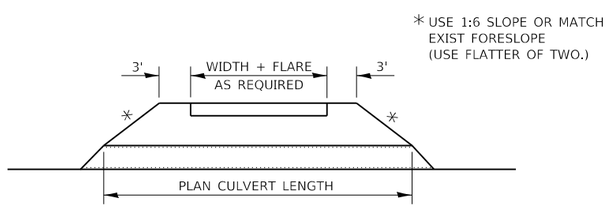

FIELD ENTRANCE DETAIL

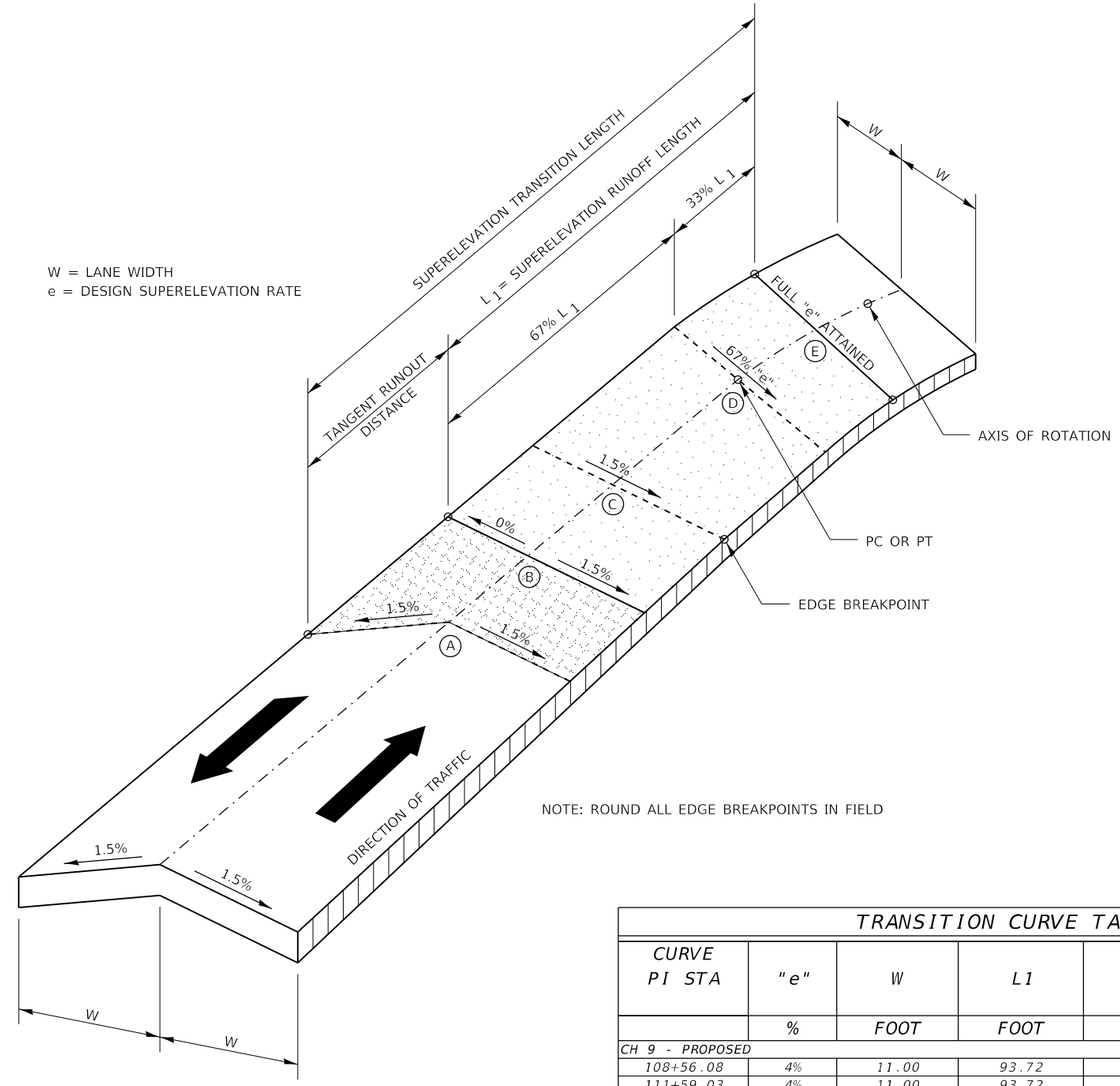

NOTE: ROUND ALL EDGE BREAKPOINTS IN FIELD

TRANSITION CURVE TABLE					
CURVE PI STA	"e"	W	L1	TR	SUPER TRANSITION LENGTH
	%	FOOT	FOOT	FOOT	FOOT
CH 9 - PROPOSED					
108+56.08	4%	11.00	93.72	35.15	128.87
111+59.03	4%	11.00	93.72	35.15	128.87
118+19.99	4%	11.00	93.72	35.15	128.87
121+22.94	4%	11.00	93.72	35.15	128.87
TR 289 (N 30TH RD) - PROPOSED					
102+51.78	4%	9.00	76.68	28.76	105.44
107+25.02	4%	9.00	76.68	28.76	105.44
FR 12.20 - PROPOSED					
2+67.13	4%	8.00	68.16	25.56	93.72
6+58.51	4%	8.00	68.16	25.56	93.72

L1 = SUPERELEVATION RUNOFF LENGTH
TR = TANGENT RUNOUT DISTANCE

SUPERELEVATION TRANSITION ON TWO-LANE HIGHWAY

GENERAL NOTES

1. THE 10:1 SLOPE CONTROLS NOSE OF ATTENUATOR BASE ELEVATION.
2. ATTENUATOR BASE GRADE PARALLELS EDGE OF PAVEMENT GRADE.
3. SLOPE ADJACENT TO ATTENUATOR BASE SHALL BE 10:1 OR FLATTER.

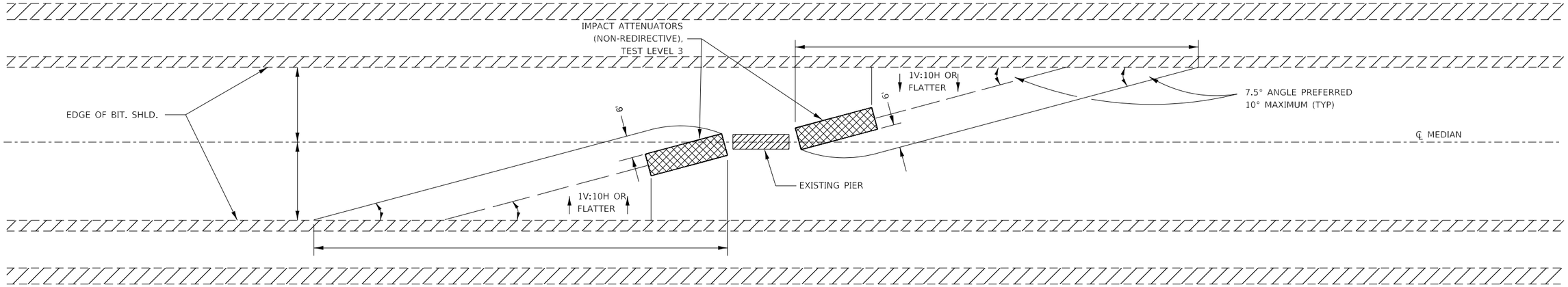

IMPACT ATTENUATOR LAYOUT AND GRADING PLAN

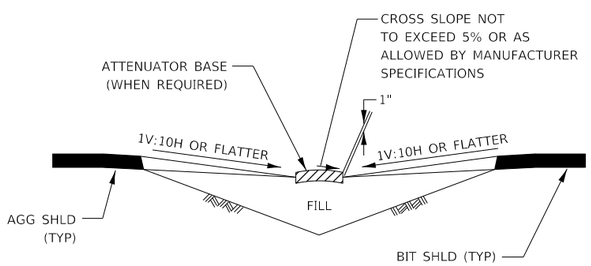

SECTION A - A

NOTE:

ATTENUATOR BASE SHALL BE PER MANUFACTURER SPECIFICATIONS EXCEPT SAND MODULE SYSTEMS SHALL HAVE THE FOLLOWING ADDITIONAL REQUIREMENTS:

1. ATTENUATOR BASE SHALL PROVIDE A 1' BUFFER ALONG THE SIDES AND FRONT OF THE ARRAY.
2. SAND MODULE SYSTEMS SHALL BE PLACED ON A HMA OR CONCRETE BASE.

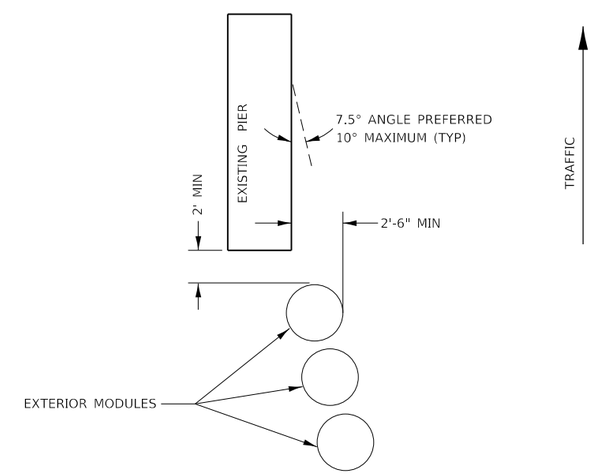

TYPICAL EXTERIOR MODULE LAYOUT

FILE NAME = c:\pw_work\pwidot\fergusonjh\d0318968\D366C59-sht-details.dgn	USER NAME = fergusonjh	DESIGNED -	REVISED -
		DRAWN -	REVISED -
	PLOT SCALE = 100.0000 ' / in.	CHECKED -	REVISED -
	PLOT DATE = 10/21/2019	DATE -	REVISED -

STATE OF ILLINOIS
DEPARTMENT OF TRANSPORTATION

IMPACT INSTALLATION DETAILS
DETAILS

SCALE: | SHEET OF SHEETS | STA. TO STA.

F.A.I RTE.	SECTION	COUNTY	TOTAL SHEETS	SHEET NO.
80	(50-3)HBR-3	LASALLE	137	57

CONTRACT NO. 66C59

ILLINOIS FED. AID PROJECT

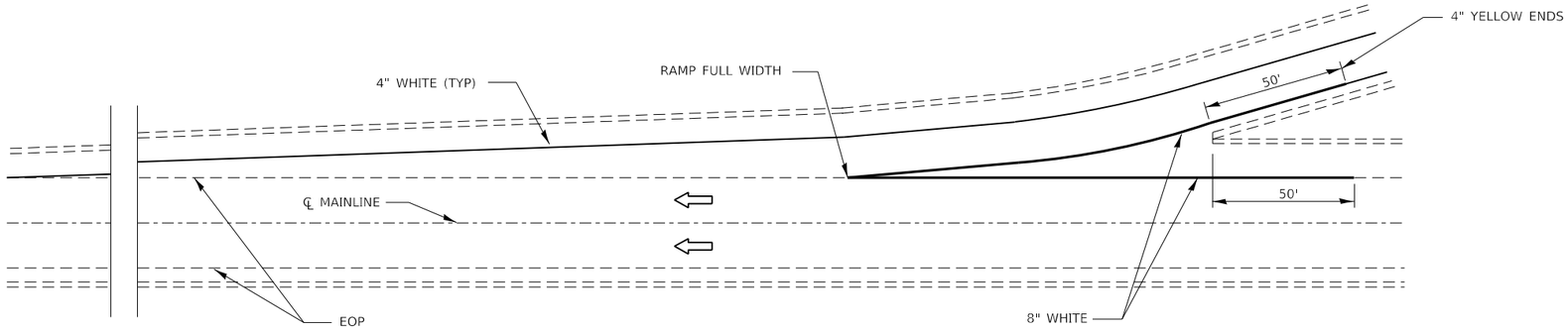

TYPICAL PAVEMENT MARKING FOR ENTRANCE RAMP TERMINALS

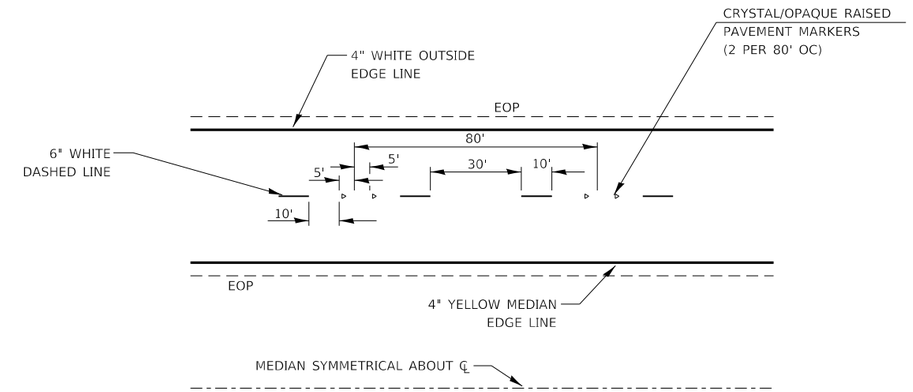

TYPICAL PAVEMENT MARKINGS

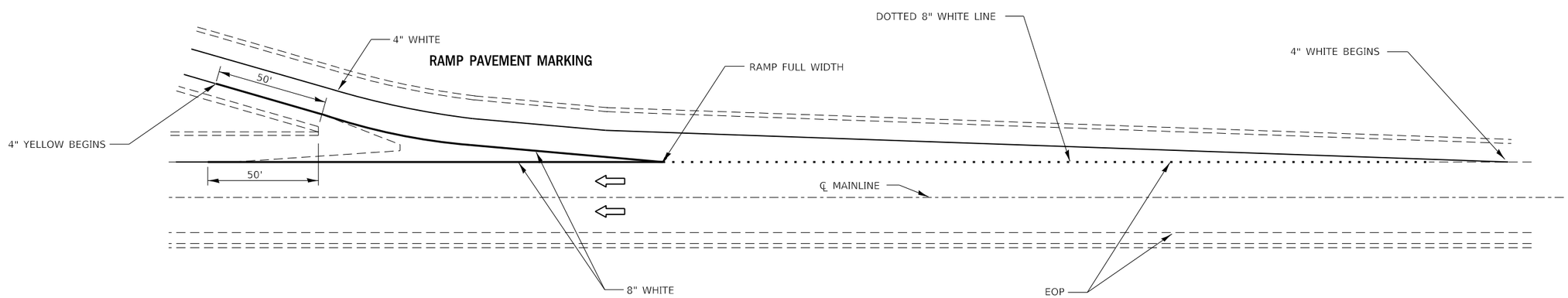

TYPICAL PAVEMENT MARKINGS FOR EXIT RAMP TERMINALS

FILE NAME =	USER NAME = fergusonjh	DESIGNED -	REVISED -	STATE OF ILLINOIS DEPARTMENT OF TRANSPORTATION	DETAILS	F.A.I RTE.	SECTION	COUNTY	TOTAL SHEETS	SHEET NO.
c:\pw_work\pwidot\fergusonjh\d0318968\D366C59-sht-details.dgn		DRAWN -	REVISED -			80	(50-3)HBR-3	LASALLE	137	58
	PLOT SCALE = 100.0000 ' / in.	CHECKED -	REVISED -					CONTRACT NO. 66C59		
	PLOT DATE = 10/21/2019	DATE -	REVISED -		SCALE: SHEET OF SHEETS STA. TO STA.		ILLINOIS	FED. AID PROJECT		

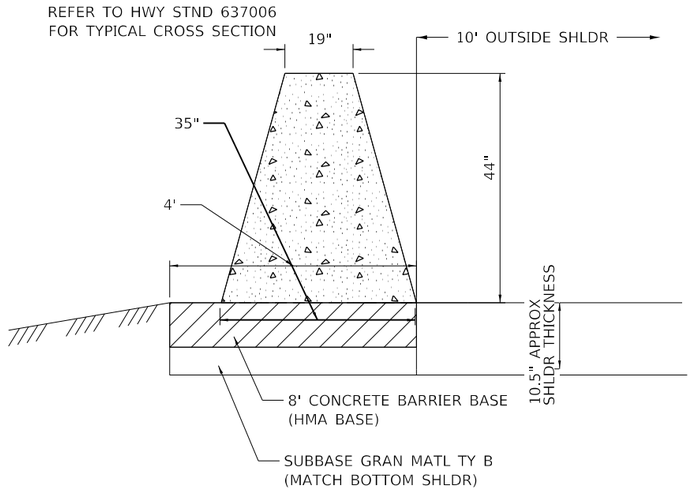

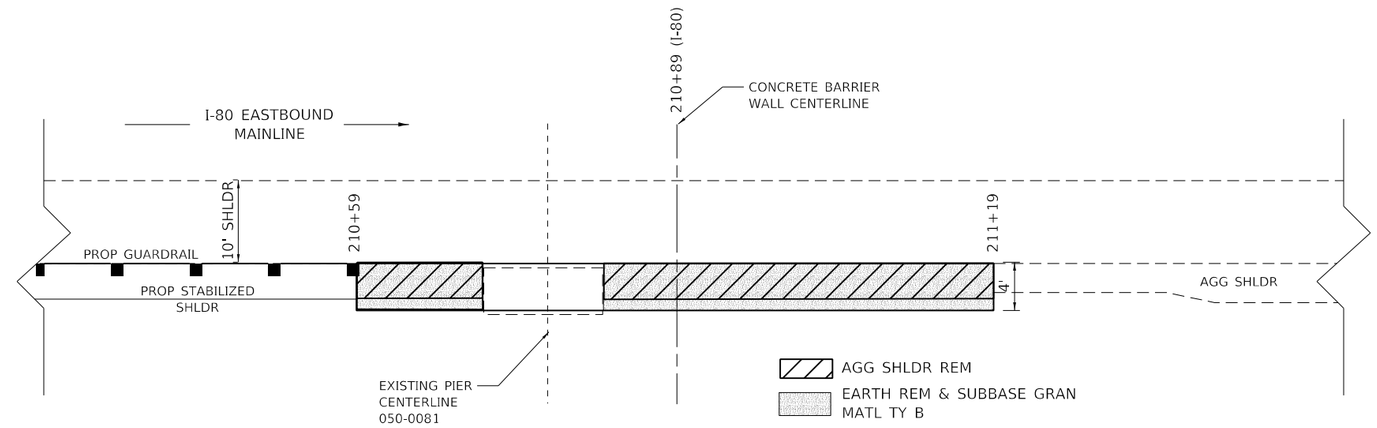

CONCRETE BARRIER DETAILS

(NOT TO SCALE)
CONNECTIONS, REINFORCEMENT AND DOWEL BARS ARE INCLUDED IN THE COST
OF CONCRETE BARRIER BASE AND CONCRETE BARRIER RESPECTIVELY

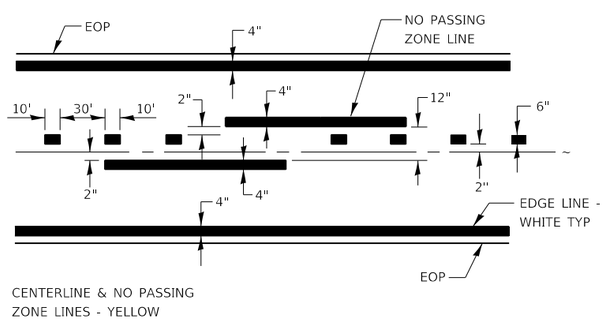

PAVEMENT MARKING

FILE NAME =	USER NAME = fergusonjh	DESIGNED -	REVISED -	STATE OF ILLINOIS	DETAILS	F.A.I RTE.	SECTION	COUNTY	TOTAL SHEETS	SHEET NO.
c:\pw_work\pwidot\fergusonjh\d0318968\D366C59-sht-details.dgn		DRAWN -	REVISED -	DEPARTMENT OF TRANSPORTATION		80	(50-3)HBR-3	LASALLE	137	59
	PLOT SCALE = 100.0000 ' / in.	CHECKED -	REVISED -					CONTRACT NO. 66C59		
	PLOT DATE = 10/21/2019	DATE -	REVISED -		SCALE: SHEET OF SHEETS STA. TO STA.		ILLINOIS FED. AID PROJECT			

STABILIZED CONSTRUCTION ENTRANCE PLAN

DIMENSIONS & LOCATION MAY BE ADJUSTED BY THE ENGINEER
BASED ON FIELD CONDITIONS

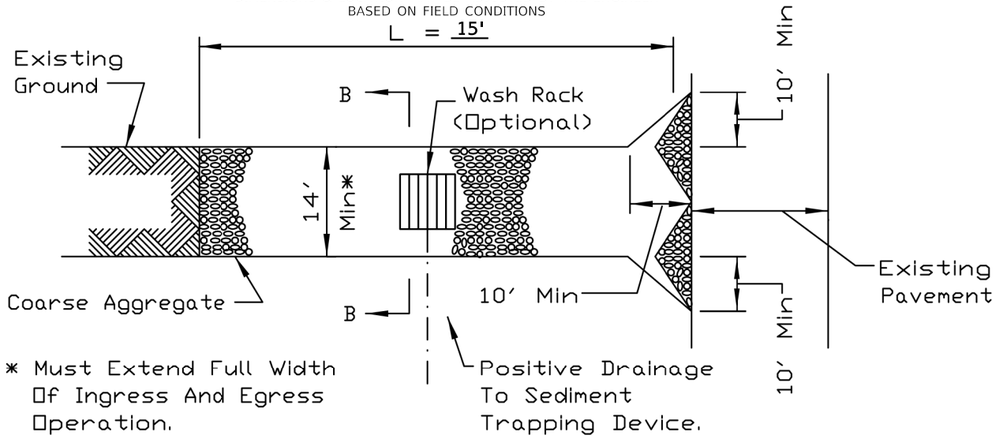

PLAN VIEW

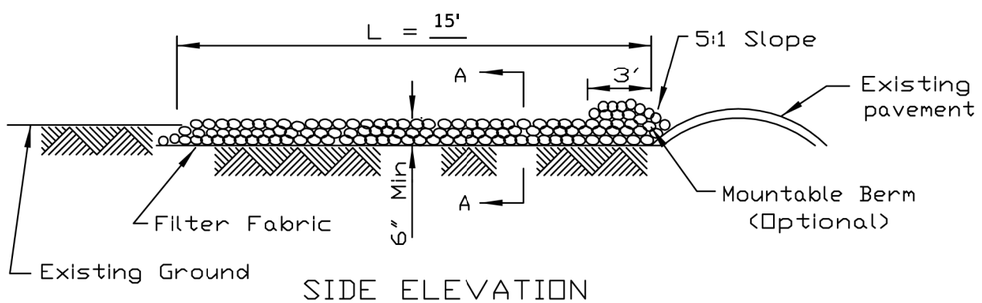

SIDE ELEVATION

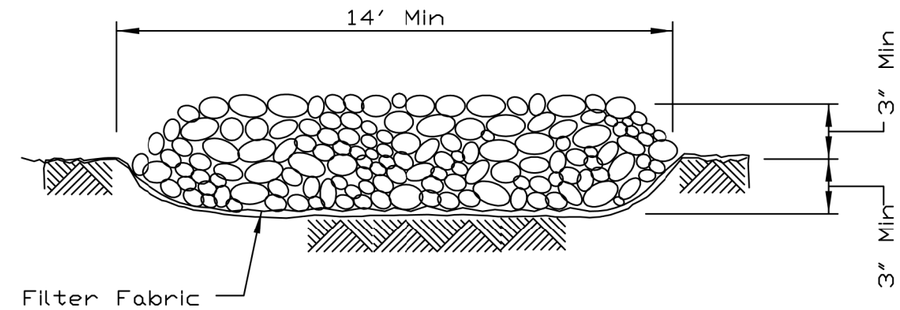

SECTION A-A

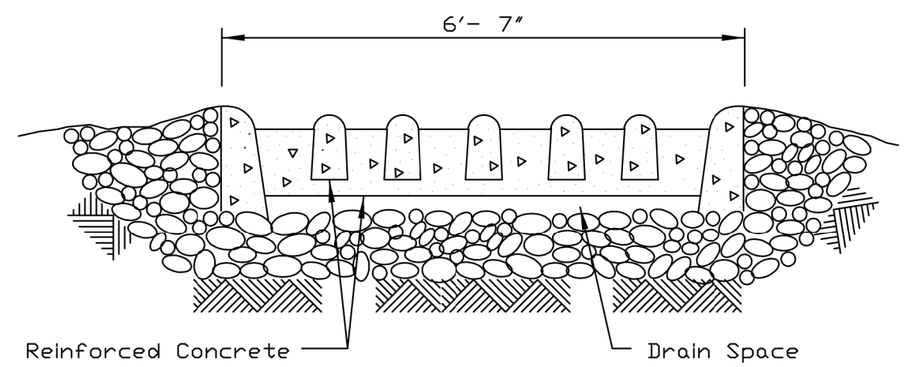

SECTION B-B

NOTES:

1. Filter fabric shall meet the requirements of material specification 592 GEOTEXTILE, Table I or 2, Class I, II or IV and shall be placed over the cleared area prior to the placing of rock.
2. Rock or reclaimed concrete shall meet one of the following IDOT coarse aggregate gradation, CA-1, CA-2, CA-3 or CA-4 and be placed according to construction specification 25 ROCKFILL using placement Method 1 and Class III compaction.
3. Any drainage facilities required because of washing shall be constructed according to manufacturers specifications.
4. If wash racks are used they shall be installed according to the manufacturer's specifications.

SOURCE: ILLINOIS URBAN MANUAL

FILE NAME = c:\pw_work\pwidot\fergusonjh\d0318968\D366C59-sht-details.dgn	USER NAME = fergusonjh	DESIGNED -	REVISED -	STATE OF ILLINOIS DEPARTMENT OF TRANSPORTATION	STABILIZED CONSTRUCTION ENTRANCE DETAILS	F.A.I RTE.	SECTION	COUNTY	TOTAL SHEETS	SHEET NO.
		DRAWN -	REVISED -			80	(50-3)HBR-3	LASALLE	137	60
	PLOT SCALE = 100.0000 ' / in.	CHECKED -	REVISED -					CONTRACT NO. 66C59		
	PLOT DATE = 10/21/2019	DATE -	REVISED -		SCALE: SHEET OF SHEETS STA. TO STA.		ILLINOIS FED. AID PROJECT			

Bench Mark: "0" - Chiseled square on S.E. concrete curb of bridge S.N. 050-0081. Elev. 653.755

Existing Structure: SN 050-0081 (Sec 50-3HB-1) was constructed in 1961 as a four-span continuous steel I-beam structure with concrete piers on pile supported spread footings. The structure measures 224'-8" back to back of abutments and 29'-8" out to out of deck with 24'-0" clear width between the curbs. The deck was constructed as a 6 1/2" concrete deck. Structure to be removed and replaced. No salvage. Traffic is to be detoured.

NOTE:
See Sheet 2 of 24
for Index of Sheets

DESIGN SPECIFICATIONS

2017 AASHTO LRFD Bridge Design Specifications

LOADING HL-93

Allow 50#/sq. ft. for future wearing surface.

SEISMIC DATA

Seismic Performance Zone (SPZ) = 1
Design Spectral Acceleration at 1.0 sec. (SD1) = 0.070
Design Spectral Acceleration at 0.2 sec. (SDS) = 0.124
Soil Site Class = C

DESIGN STRESSES

FIELD UNITS

f'c = 3,500 psi
f'c = 4,000 psi (Superstructure Concrete)
fy = 60,000 psi (Reinforcement)
fy = 50,000 psi (M270 Grade 50)

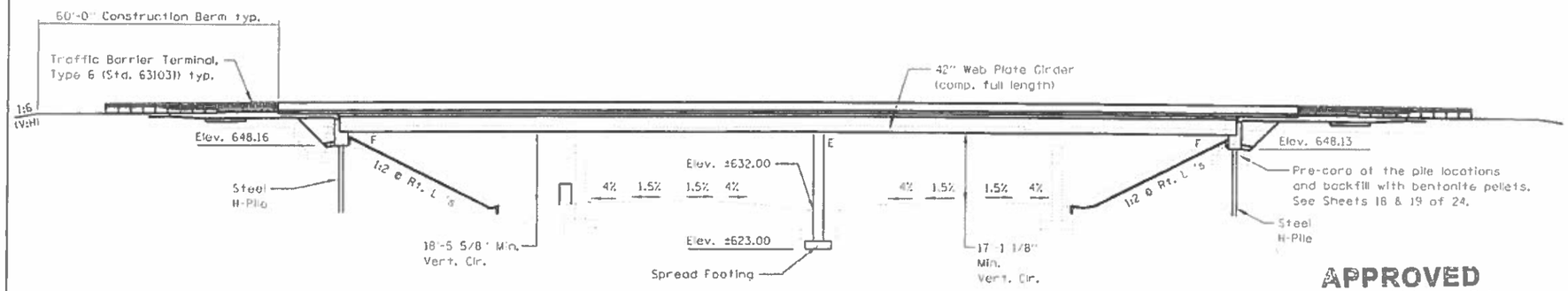

ELEVATION

APPROVED
For Structural Adequacy Only
Engineer of Bridges & Structures

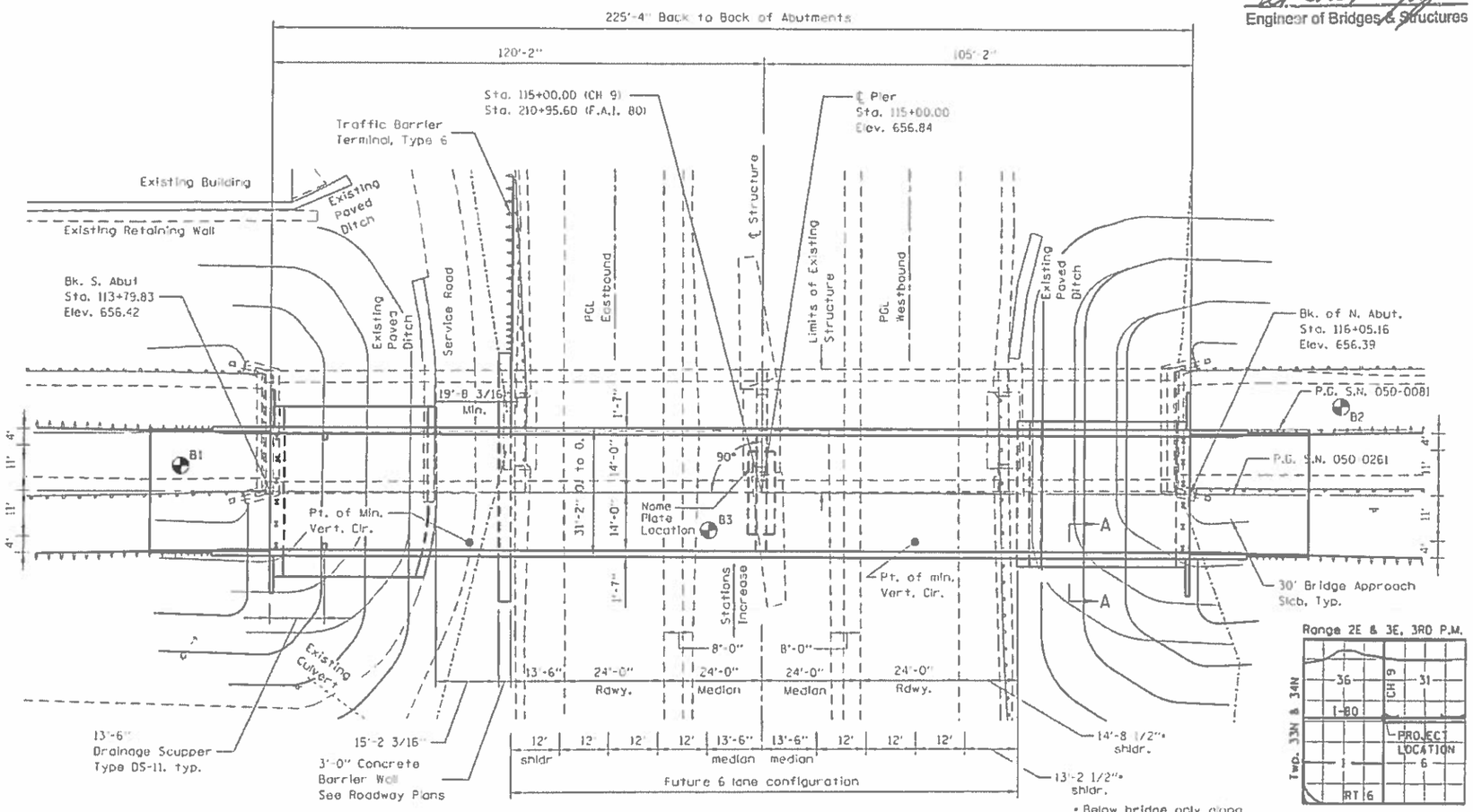

* Below bridge only along centerline bridge (12' and varies outside limits of bridge)

PLAN

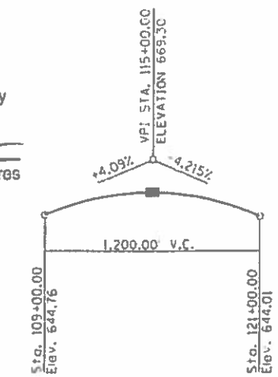

PROFILE GRADE CH 9

(Along ℄ Roadway)

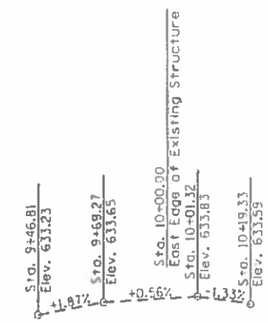

PROFILE GRADE SERVICE ROAD

(Along Westbound ℄ Roadway)

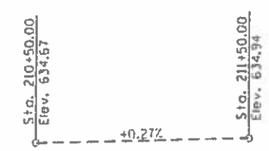

PROFILE GRADE I-80

(Along Eastbound ℄ Roadway)

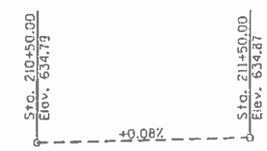

PROFILE GRADE I-80

(Along Westbound ℄ Roadway)

10-23-19
date

LICENSED STRUCTURAL ENGINEER
JAMES K. CLINKRD
NO. 081-001655
STATE OF ILLINOIS
expires 11-30-2020
signature
PROFESSIONAL DESIGN FIRM LICENSE NO. 184-001717

10-23-19
date

LICENSED STRUCTURAL ENGINEER
ADAM D. BOHNHOFF
081-007431
EFFINGHAM
STATE OF ILLINOIS
EXP 11-30-20
signature

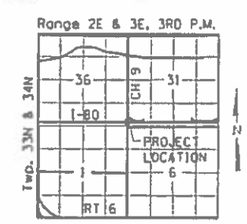

LOCATION SKETCH

GENERAL PLAN & ELEVATION
CH 9 OVER I-80
F.A.I. RTE. 80 (I-80)
SECTION (50-3) HBR-3
LASALLE COUNTY
STATION 115+00
SN 050-0261

CHAMLIN & ASSOCIATES, INC.

USER NAME =	DESIGNED - JKC	REVISED -	
	CHECKED - AJD	REVISED -	
PLOT SCALE =	DRAWN - NV	REVISED -	
PLOT DATE =	CHECKED - JKC	REVISED -	

STATE OF ILLINOIS
DEPARTMENT OF TRANSPORTATION

GENERAL PLAN & ELEVATION
STRUCTURE NO. 050-0261

SHEET 1 OF 24 SHEETS

F.A.I. RTE.	SECTION	COUNTY	TOTAL SHEETS	SHEET NO.
80	(50-3) HBR-3	LASALLE	137	61

CONTRACT NO. 66C59
ILLINOIS FED. AID PROJECT

MODEL: Default
FILE NAME: G:\Users\11\11287-03 CH 9 over I80 Bridge Plans\CAD\Survey D366C59\Consultant Data\Chamlin_2019\CAD Sheets\050026-66C59-001-GPE.dgn
10/23/2019 8:26:30 AM

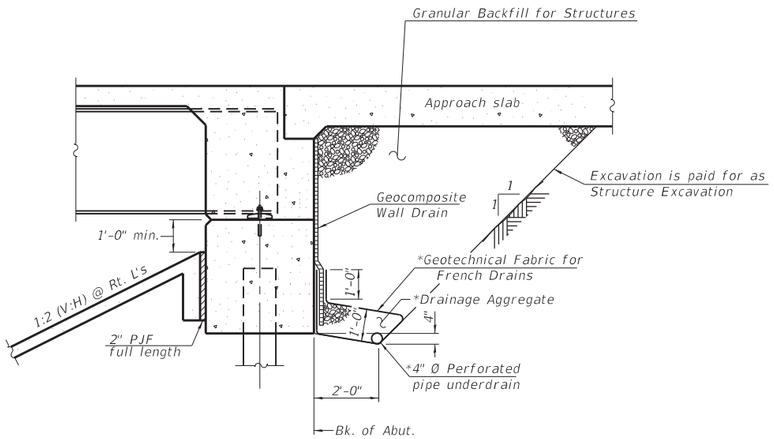

SECTION THRU INTEGRAL ABUTMENT

(Horiz. dim. @ Rt. ∠'s)

*Included in the cost of Pipe Underdrains for Structures.
(See Special Provisions)

Note:
All drainage system components shall extend to 2'-0" from the end of each wingwall except an outlet pipe shall extend until intersecting with the side slopes. The pipes shall drain into concrete headwalls. (See Article 601.05 of the Standard Specifications and Highway Standard 601101).

GENERAL NOTES

Fasteners shall be ASTM A325 Type 1, mechanically galvanized bolts. Bolts 7/8 in. Ø, holes 15/16 in. Ø, unless otherwise noted.

Calculated weight of Structural Steel = 217,530 pounds GR50

17,400 pounds GR36

No field welding is permitted except as specified in the contract documents.

Reinforcement bars designated (E) shall be epoxy coated.

Bearing seat surfaces shall be constructed or adjusted to the designated elevations within a tolerance of 1/8 inch (0.01 ft.). Adjustment shall be made either by grinding the surface or by shimming the bearings.

The existing structural steel coating contains lead. The Contractor shall take appropriate precautions to deal with the presence of lead on this project.

The Organic Zinc Rich Primer / Epoxy / Urethane Paint System shall be used for painting of new structural steel except where otherwise noted. The entire system shall be shop applied, with the exception of the exterior surface and the bottom of the bottom flange of fascia beams, masked off connection surfaces, field installed fasteners and damaged areas shall be touched up in the field. The color of the final finish coat for all interior steel surfaces shall be Gray, Munsell No. 5B 7/1. The color of the final finish coat for the exterior and bottom flange of the fascia beams shall be Interstate Green, Munsell No. 7.5G 4/8.

The embankment configuration shown shall be the minimum that must be placed and compacted prior to construction of the abutments.

Two 1/8 in. adjusting shims shall be provided for each bearing in addition to all other plates or shims and placed as shown on bearing details.

Slopewall shall be reinforced with welded wire fabric, 6" x 6" - W4.0 x W4.0, weighing 58 lbs. per 100 sq. ft.

TOTAL BILL OF MATERIAL

ITEM	UNIT	SUPER	SUB	TOTAL
Granular Backfill for Structures	Cu. Yd.	--	65	65
Removal of Existing Structures	Each	--	--	1
Structure Excavation	Cu. Yd.	--	386	386
Concrete Structures	Cu. Yd.	--	136.5	136.5
Concrete Superstructure	Cu. Yd.	266.0	--	266.0
Bridge Deck Grooving	Sq. Yd.	882	--	882
Protective Coat	Sq. Yd.	1314	--	1314
Concrete Superstructure (Approach Slab)	Cu. Yd.	85.3	--	85.3
Furnishing and Erecting Structural Steel	L. Sum	1	--	1
Stud Shear Connectors	Each	2304	--	2304
Reinforcement Bars, Epoxy Coated	Pound	94400	24310	118710
Slope Wall 4 Inch	Sq. Yd.	--	360	360
Name Plates	Each	--	1	1
Furnishing Steel Piles HP 12 x 74	Foot	--	816	816
Driving Piles	Foot	--	816	816
Elastomeric Bearing Assembly, Type 1	Each	6	--	6
Anchor Bolt, 1"	Each	--	24	24
Anchor Bolt, 1 1/2"	Each	--	12	12
Geocomposite Wall Drain	Sq. Yd.	--	72	72
Drainage Scuppers, DS-11	Each	2	--	2
Pipe Underdrains for Structures 4"	Foot	--	151	151

INDEX OF SHEETS

1	General Plan & Elevation
2	General Data
3-4	Top of Slab Elevations
5-6	Top of Approach Slab Elevations
7	Superstructure
8	Superstructure Details
9	Diaphragm Details
10	Drainage Scupper, DS-11
11	Concrete Parapet Slipforming Option
12-13	Bridge Approach Slab Details
14-16	Girder and Framing Details
17	Bearing Details
18	South Abutment
19	North Abutment
20	Pier
21	HP Pile Details
22-24	Boring Logs

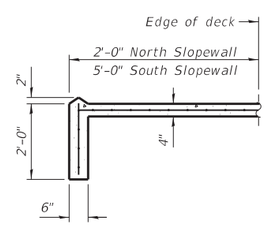

SECTION A-A

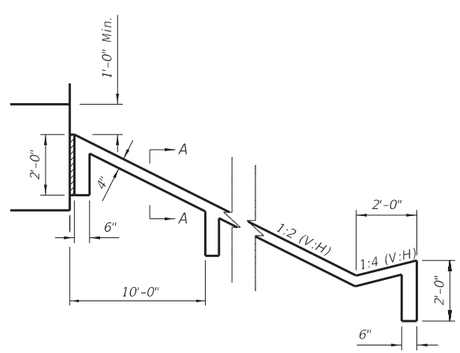

SLOPE WALL ADJACENT TO SERVICE ROAD

(South)

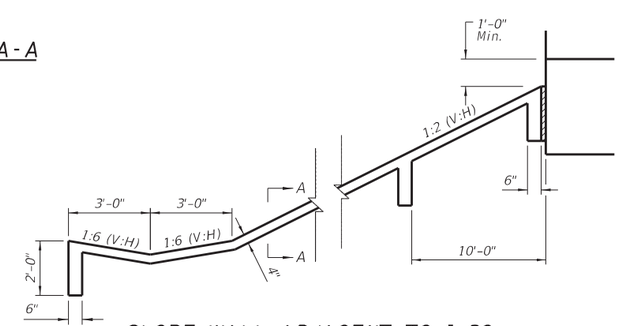

SLOPE WALL ADJACENT TO I-80

(North)

STATION 115+00.00
BUILT BY
STATE OF ILLINOIS
F.A.I. RT. 80 SEC. (50-3) HBR-3
LOADING HL-93
STRUCTURE NO. 050-0261

NAME PLATE

See Std. 515001

MODEL: Default
FILE NAME: G:\Users\11111287-03 CH 9 over I80 Bridge Plans\CAD\Survey D366C59\Consultant_Data\Chamlin_2019\CAD_Sheets\0500261-66C59-002-GEN-DATA.dgn

CHAMLIN & ASSOCIATES, INC.

USER NAME =	DESIGNED - JKC	REVISED -	
	CHECKED - AJO	REVISED -	
PLOT SCALE =	DRAWN - NV	REVISED -	
PLOT DATE =	CHECKED - JKC	REVISED -	

STATE OF ILLINOIS
DEPARTMENT OF TRANSPORTATION

GENERAL DATA
STRUCTURE NO. 050-0261

SHEET 2 OF 24 SHEETS

F.A.I. RTE.	SECTION	COUNTY	TOTAL SHEETS	SHEET NO.
80	(50-3) HBR-3	LASALLE	137	62
		CONTRACT NO. 66C59		
		ILLINOIS	FED. AID PROJECT	

10/15/2019 3:56:57 PM

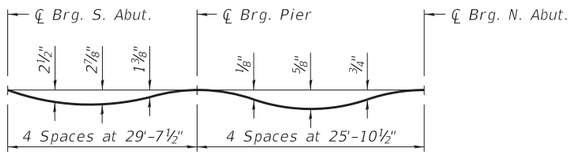

DEAD LOAD DEFLECTION DIAGRAM

(Includes weight of concrete only.)

Note:
The above deflections are not to be used in the field if the engineer is working from the grade elevations adjusted for dead load deflections as shown below and sheet 4 of 24.

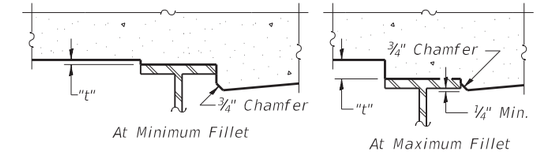

To determine "t": After all structural steel has been erected, elevations of the top flanges of the beams shall be taken at intervals shown below. These elevations subtracted from the "Theoretical Grade Elevations Adjusted for Dead Load Deflection" shown below and on sheet 4 of 24, minus slab thickness, equals the fillet heights "t" above top flange of beams.

FILLET HEIGHTS

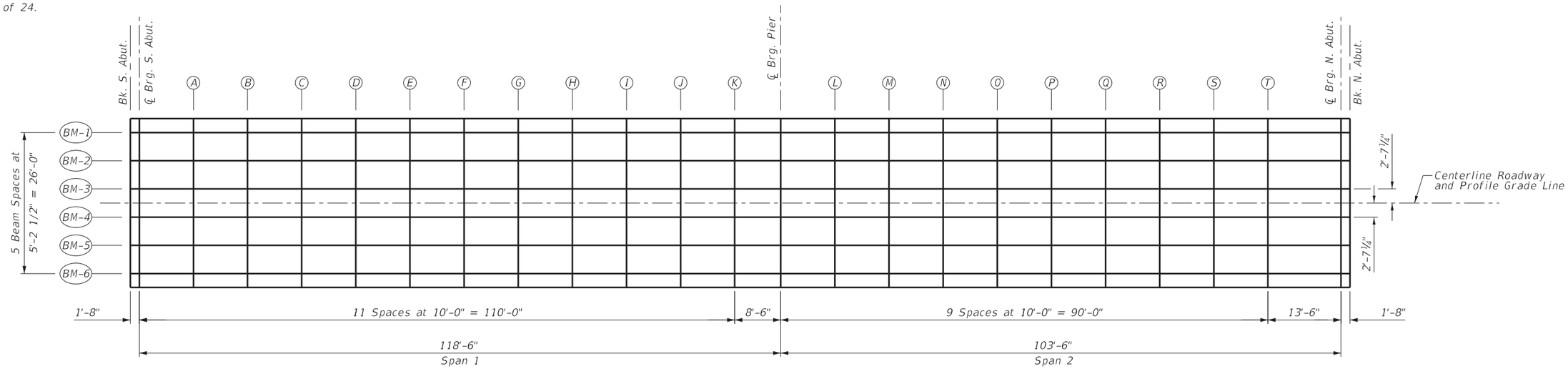

PLAN

N

BEAM 1				
Location	Station	Offset	Theoretical Grade Elevations	Theoretical Grade Elevations Adjusted for Dead Load Deflections
BK. S. ABUT.	113+79.83	-13.02	656.21	656.21
CL. BRG. S. ABUT.	113+81.50	-13.02	656.22	656.22
A	113+91.50	-13.02	656.29	656.37
B	114+01.50	-13.02	656.36	656.51
C	114+11.50	-13.02	656.41	656.63
D	114+21.50	-13.02	656.47	656.71
E	114+31.50	-13.02	656.51	656.77
F	114+41.50	-13.02	656.55	656.79
G	114+51.50	-13.02	656.58	656.79
H	114+61.50	-13.02	656.60	656.77
I	114+71.50	-13.02	656.62	656.73
J	114+81.50	-13.02	656.63	656.69
K	114+91.50	-13.02	656.63	656.66
CL. BRG. PIER	115+00.00	-13.02	656.63	656.63
L	115+10.00	-13.02	656.62	656.61
M	115+20.00	-13.02	656.60	656.61
N	115+30.00	-13.02	656.58	656.60
O	115+40.00	-13.02	656.55	656.60
P	115+50.00	-13.02	656.51	656.58
Q	115+60.00	-13.02	656.47	656.55
R	115+70.00	-13.02	656.42	656.50
S	115+80.00	-13.02	656.36	656.38
T	115+90.00	-13.02	656.29	656.34
CL. BRG. N. ABUT.	116+03.50	-13.02	656.20	656.20
BK. N. ABUT.	116+05.16	-13.02	656.18	656.18

BEAM 2				
Location	Station	Offset	Theoretical Grade Elevations	Theoretical Grade Elevations Adjusted for Dead Load Deflections
BK. S. ABUT.	113+79.83	-7.81	656.30	656.30
CL. BRG. S. ABUT.	113+81.50	-7.81	656.31	656.31
A	113+91.50	-7.81	656.38	656.46
B	114+01.50	-7.81	656.45	656.60
C	114+11.50	-7.81	656.50	656.72
D	114+21.50	-7.81	656.56	656.80
E	114+31.50	-7.81	656.60	656.86
F	114+41.50	-7.81	656.64	656.88
G	114+51.50	-7.81	656.67	656.88
H	114+61.50	-7.81	656.69	656.86
I	114+71.50	-7.81	656.71	656.82
J	114+81.50	-7.81	656.72	656.78
K	114+91.50	-7.81	656.72	656.75
CL. BRG. PIER	115+00.00	-7.81	656.72	656.72
L	115+10.00	-7.81	656.71	656.70
M	115+20.00	-7.81	656.69	656.70
N	115+30.00	-7.81	656.67	656.69
O	115+40.00	-7.81	656.64	656.69
P	115+50.00	-7.81	656.60	656.67
Q	115+60.00	-7.81	656.56	656.64
R	115+70.00	-7.81	656.51	656.59
S	115+80.00	-7.81	656.45	656.47
T	115+90.00	-7.81	656.38	656.43
CL. BRG. N. ABUT.	116+03.50	-7.81	656.29	656.29
BK. N. ABUT.	116+05.16	-7.81	656.27	656.27

BEAM 3				
Location	Station	Offset	Theoretical Grade Elevations	Theoretical Grade Elevations Adjusted for Dead Load Deflections
BK. S. ABUT.	113+79.83	-2.60	656.38	656.38
CL. BRG. S. ABUT.	113+81.50	-2.60	656.39	656.39
A	113+91.50	-2.60	656.46	656.55
B	114+01.50	-2.60	656.53	656.68
C	114+11.50	-2.60	656.59	656.80
D	114+21.50	-2.60	656.64	656.89
E	114+31.50	-2.60	656.68	656.94
F	114+41.50	-2.60	656.72	656.97
G	114+51.50	-2.60	656.75	656.96
H	114+61.50	-2.60	656.77	656.94
I	114+71.50	-2.60	656.79	656.90
J	114+81.50	-2.60	656.80	656.86
K	114+91.50	-2.60	656.80	656.83
CL. BRG. PIER	115+00.00	-2.60	656.80	656.80
L	115+10.00	-2.60	656.79	656.78
M	115+20.00	-2.60	656.78	656.78
N	115+30.00	-2.60	656.75	656.77
O	115+40.00	-2.60	656.72	656.77
P	115+50.00	-2.60	656.68	656.75
Q	115+60.00	-2.60	656.64	656.72
R	115+70.00	-2.60	656.59	656.67
S	115+80.00	-2.60	656.53	656.55
T	115+90.00	-2.60	656.46	656.51
CL. BRG. N. ABUT.	116+03.50	-2.60	656.37	656.37
BK. N. ABUT.	116+05.16	-2.60	656.35	656.35

CENTERLINE ROADWAY AND PROFILE GRADE

Location	Station	Offset	Theoretical Grade Elevations	Theoretical Grade Elevations Adjusted for Dead Load Deflections
BK. S. ABUT.	113+79.83	0.00	656.42	656.42
CL. BRG. S. ABUT.	113+81.50	0.00	656.43	656.43
A	113+91.50	0.00	656.50	656.59
B	114+01.50	0.00	656.57	656.73
C	114+11.50	0.00	656.63	656.84
D	114+21.50	0.00	656.68	656.93
E	114+31.50	0.00	656.72	656.98
F	114+41.50	0.00	656.76	657.01
G	114+51.50	0.00	656.79	657.00
H	114+61.50	0.00	656.82	656.98
I	114+71.50	0.00	656.83	656.94
J	114+81.50	0.00	656.84	656.90
K	114+91.50	0.00	656.85	656.87
CL. BRG. PIER	115+00.00	0.00	656.84	656.84
L	115+10.00	0.00	656.83	656.83
M	115+20.00	0.00	656.82	656.82
N	115+30.00	0.00	656.79	656.81
O	115+40.00	0.00	656.76	656.81
P	115+50.00	0.00	656.72	656.79
Q	115+60.00	0.00	656.68	656.76
R	115+70.00	0.00	656.63	656.72
S	115+80.00	0.00	656.57	656.59
T	115+90.00	0.00	656.51	656.55
CL. BRG. N. ABUT.	116+03.50	0.00	656.41	656.41
BK. N. ABUT.	116+05.16	0.00	656.39	656.39

BEAM 4

Location	Station	Offset	Theoretical Grade Elevations	Theoretical Grade Elevations Adjusted for Dead Load Deflections
BK. S. ABUT.	113+79.83	2.60	656.38	656.38
CL. BRG. S. ABUT.	113+81.50	2.60	656.39	656.39
A	113+91.50	2.60	656.46	656.55
B	114+01.50	2.60	656.53	656.68
C	114+11.50	2.60	656.59	656.80
D	114+21.50	2.60	656.64	656.89
E	114+31.50	2.60	656.68	656.94
F	114+41.50	2.60	656.72	656.97
G	114+51.50	2.60	656.75	656.96
H	114+61.50	2.60	656.77	656.94
I	114+71.50	2.60	656.79	656.90
J	114+81.50	2.60	656.80	656.86
K	114+91.50	2.60	656.80	656.83
CL. BRG. PIER	115+00.00	2.60	656.80	656.80
L	115+10.00	2.60	656.79	656.78
M	115+20.00	2.60	656.78	656.78
N	115+30.00	2.60	656.75	656.77
O	115+40.00	2.60	656.72	656.77
P	115+50.00	2.60	656.68	656.75
Q	115+60.00	2.60	656.64	656.72
R	115+70.00	2.60	656.59	656.67
S	115+80.00	2.60	656.53	656.55
T	115+90.00	2.60	656.46	656.51
CL. BRG. N. ABUT.	116+03.50	2.60	656.37	656.37
BK. N. ABUT.	116+05.16	2.60	656.35	656.35

BEAM 5

Location	Station	Offset	Theoretical Grade Elevations	Theoretical Grade Elevations Adjusted for Dead Load Deflections
BK. S. ABUT.	113+79.83	7.81	656.30	656.30
CL. BRG. S. ABUT.	113+81.50	7.81	656.31	656.31
A	113+91.50	7.81	656.38	656.46
B	114+01.50	7.81	656.45	656.60
C	114+11.50	7.81	656.50	656.72
D	114+21.50	7.81	656.56	656.80
E	114+31.50	7.81	656.60	656.86
F	114+41.50	7.81	656.64	656.88
G	114+51.50	7.81	656.67	656.88
H	114+61.50	7.81	656.69	656.86
I	114+71.50	7.81	656.71	656.82
J	114+81.50	7.81	656.72	656.78
K	114+91.50	7.81	656.72	656.75
CL. BRG. PIER	115+00.00	7.81	656.72	656.72
L	115+10.00	7.81	656.71	656.70
M	115+20.00	7.81	656.69	656.70
N	115+30.00	7.81	656.67	656.69
O	115+40.00	7.81	656.64	656.69
P	115+50.00	7.81	656.60	656.67
Q	115+60.00	7.81	656.56	656.64
R	115+70.00	7.81	656.51	656.59
S	115+80.00	7.81	656.45	656.47
T	115+90.00	7.81	656.38	656.43
CL. BRG. N. ABUT.	116+03.50	7.81	656.29	656.29
BK. N. ABUT.	116+05.16	7.81	656.27	656.27

BEAM 6

Location	Station	Offset	Theoretical Grade Elevations	Theoretical Grade Elevations Adjusted for Dead Load Deflections
BK. S. ABUT.	113+79.83	13.02	656.21	656.21
CL. BRG. S. ABUT.	113+81.50	13.02	656.22	656.22
A	113+91.50	13.02	656.29	656.37
B	114+01.50	13.02	656.36	656.51
C	114+11.50	13.02	656.41	656.63
D	114+21.50	13.02	656.47	656.71
E	114+31.50	13.02	656.51	656.77
F	114+41.50	13.02	656.55	656.79
G	114+51.50	13.02	656.58	656.79
H	114+61.50	13.02	656.60	656.77
I	114+71.50	13.02	656.62	656.73
J	114+81.50	13.02	656.63	656.69
K	114+91.50	13.02	656.63	656.66
CL. BRG. PIER	115+00.00	13.02	656.63	656.63
L	115+10.00	13.02	656.62	656.61
M	115+20.00	13.02	656.60	656.61
N	115+30.00	13.02	656.58	656.60
O	115+40.00	13.02	656.55	656.60
P	115+50.00	13.02	656.51	656.58
Q	115+60.00	13.02	656.47	656.55
R	115+70.00	13.02	656.42	656.50
S	115+80.00	13.02	656.36	656.38
T	115+90.00	13.02	656.29	656.34
CL. BRG. N. ABUT.	116+03.50	13.02	656.20	656.20
BK. N. ABUT.	116+05.16	13.02	656.18	656.18

WEST EDGE OF SHOULDER			
Location	Station	Offset	Theoretical Grade Elevations
S. End South Appr. Pav't	113+50.83	-14.00	655.93
A1	113+60.83	-14.00	656.03
A2	113+70.83	-14.00	656.11
N. End South Appr. Pav't	113+80.83	-14.00	656.19

WEST EDGE OF PAVEMENT			
Location	Station	Offset	Theoretical Grade Elevations
S. End South Appr. Pav't	113+50.83	-11.00	655.99
A1	113+60.83	-11.00	656.09
A2	113+70.83	-11.00	656.17
N. End South Appr. Pav't	113+80.83	-11.00	656.25

CENTERLINE ROADWAY AND PROFILE GRADE			
Location	Station	Offset	Theoretical Grade Elevations
S. End South Appr. Pav't	113+50.83	0.00	656.17
A1	113+60.83	0.00	656.26
A2	113+70.83	0.00	656.35
N. End South Appr. Pav't	113+80.83	0.00	656.43

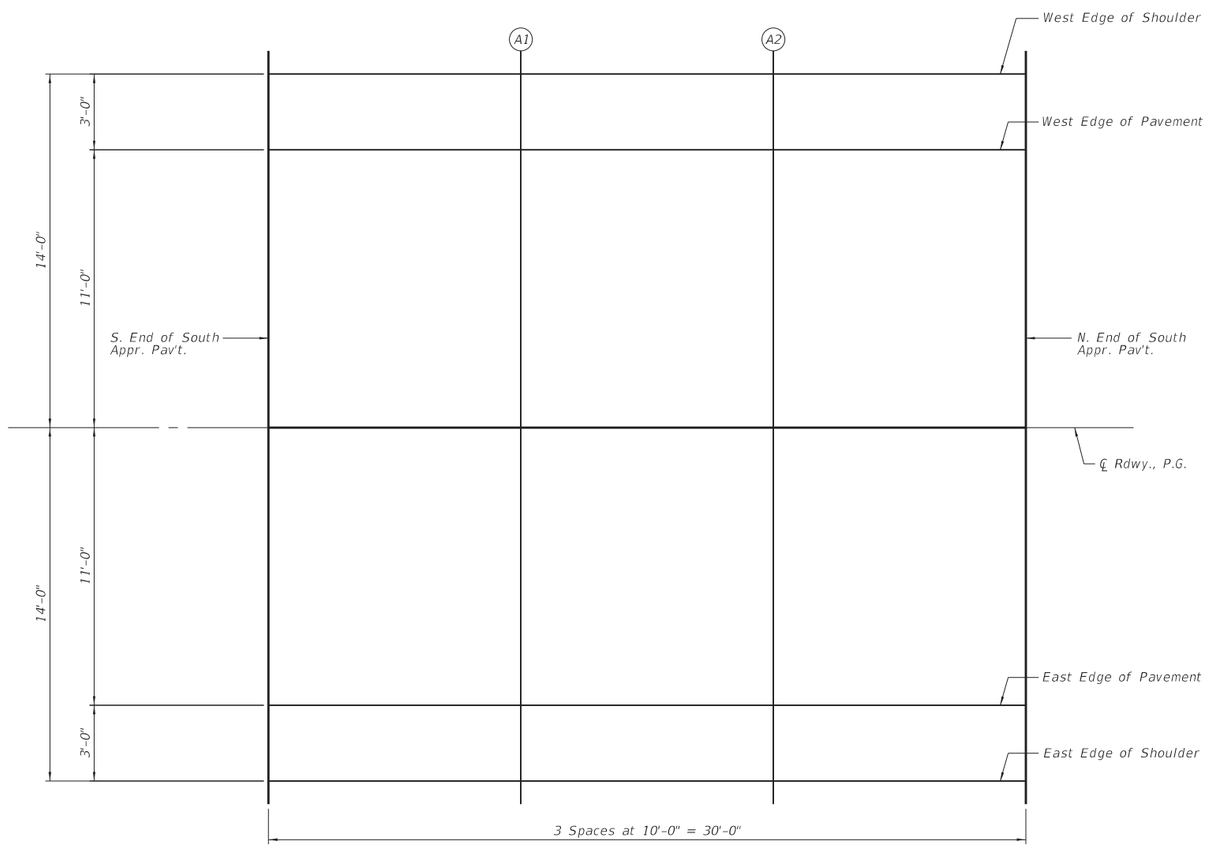

EAST EDGE OF PAVEMENT			
Location	Station	Offset	Theoretical Grade Elevations
S. End South Appr. Pav't	113+50.83	11.00	655.99
A1	113+60.83	11.00	656.09
A2	113+70.83	11.00	656.17
N. End South Appr. Pav't	113+80.83	11.00	656.25

EAST EDGE OF SHOULDER			
Location	Station	Offset	Theoretical Grade Elevations
S. End South Appr. Pav't	113+50.83	14.00	655.93
A1	113+60.83	14.00	656.03
A2	113+70.83	14.00	656.11
N. End South Appr. Pav't	113+80.83	14.00	656.19

PLAN

South Approach

N

MODEL: Default
FILE NAME: G:\Users\11111287-03 CH 9 over I80 Bridge Plans\CAD\Survey D366C59\Consultant_Data\Chamlin_2019\CAD_Sheets\0500261-66C59-005-006-TOP-APPR-SLAB-ELEV.dgn

CHAMLIN & ASSOCIATES, INC.

USER NAME =	DESIGNED - JKC	REVISED -	
	CHECKED - AJO	REVISED -	
PLOT SCALE =	DRAWN - NV	REVISED -	
PLOT DATE =	CHECKED - JKC	REVISED -	

STATE OF ILLINOIS
DEPARTMENT OF TRANSPORTATION

TOP OF APPROACH SLAB ELEVATIONS
STRUCTURE NO. 050-0261

SHEET 5 OF 24 SHEETS

F.A.I. RTE.	SECTION	COUNTY	TOTAL SHEETS	SHEET NO.
80	(50-3) HBR-3	LASALLE	137	65
		CONTRACT NO. 66C59		
		ILLINOIS	FED. AID PROJECT	

10/16/2019 8:22:46 AM

WEST EDGE OF SHOULDER			
Location	Station	Offset	Theoretical Grade Elevations
S. End North Appr. Pav't	116+04.16	-14.00	656.17
A1	116+14.16	-14.00	656.09
A2	116+24.16	-14.00	656.00
N. End North Appr. Pav't	116+34.16	-14.00	655.90

WEST EDGE OF PAVEMENT			
Location	Station	Offset	Theoretical Grade Elevations
S. End North Appr. Pav't	116+04.16	-11.00	656.23
A1	116+14.16	-11.00	656.15
A2	116+24.16	-11.00	656.06
N. End North Appr. Pav't	116+34.16	-11.00	655.96

CENTERLINE ROADWAY AND PROFILE GRADE			
Location	Station	Offset	Theoretical Grade Elevations
S. End North Appr. Pav't	116+04.16	0.00	656.40
A1	116+14.16	0.00	656.32
A2	116+24.16	0.00	656.23
N. End North Appr. Pav't	116+34.16	0.00	656.14

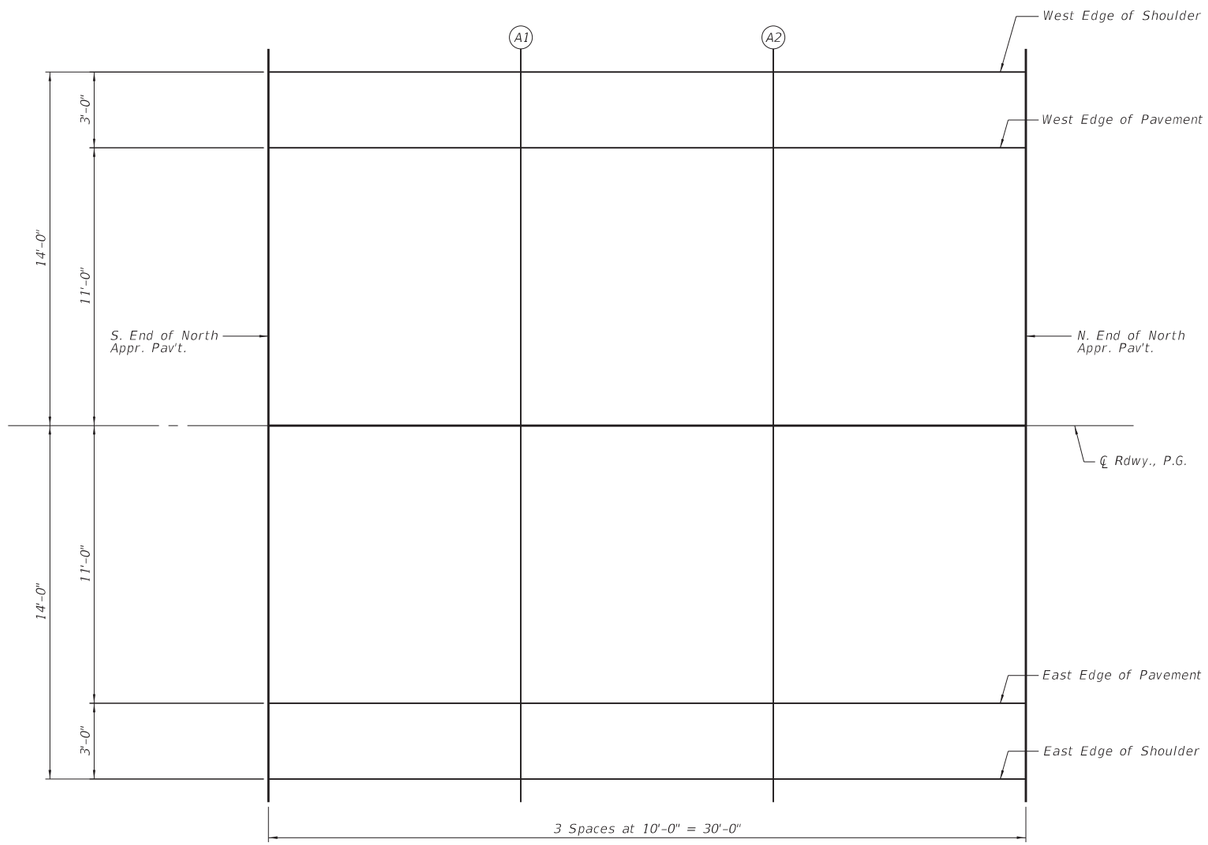

PLAN

North Approach

N

EAST EDGE OF PAVEMENT			
Location	Station	Offset	Theoretical Grade Elevations
S. End North Appr. Pav't	116+04.16	11.00	656.23
A1	116+14.16	11.00	656.15
A2	116+24.16	11.00	656.06
N. End North Appr. Pav't	116+34.16	11.00	655.96

EAST EDGE OF SHOULDER			
Location	Station	Offset	Theoretical Grade Elevations
S. End North Appr. Pav't	116+04.16	14.00	656.17
A1	116+14.16	14.00	656.09
A2	116+24.16	14.00	656.00
N. End North Appr. Pav't	116+34.16	14.00	655.90

MODEL: Default
FILE NAME: G:\Users\11111287-03 CH 9 over I80 Bridge Plans\CAD\Survey D366C59\Consultant_Data\Chamlin_2019\CAD_Sheets\0500261-66C59-005-006-TOP-APPR-SLAB-ELEV.dgn

CHAMLIN & ASSOCIATES, INC.

USER NAME =	DESIGNED - JKC	REVISED -	
	CHECKED - AJO	REVISED -	
PLOT SCALE =	DRAWN - NV	REVISED -	
PLOT DATE =	CHECKED - JKC	REVISED -	

STATE OF ILLINOIS
DEPARTMENT OF TRANSPORTATION

TOP OF APPROACH SLAB ELEVATIONS
STRUCTURE NO. 050-0261

SHEET 6 OF 24 SHEETS

F.A.I. RTE.	SECTION	COUNTY	TOTAL SHEETS	SHEET NO.
80	(50-3) HBR-3	LASALLE	137	66

CONTRACT NO. 66C59

ILLINOIS | FED. AID PROJECT

10/16/2019 8:23:02 AM

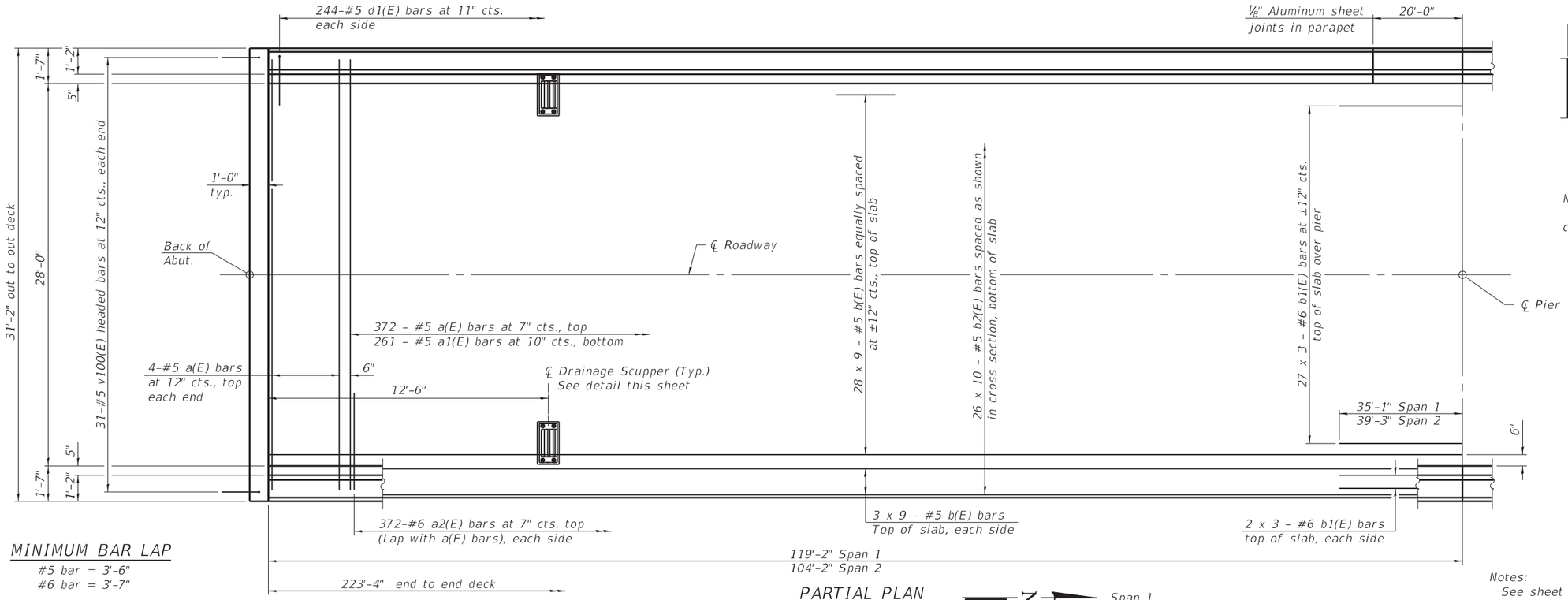

MINIMUM BAR LAP

#5 bar = 3'-6"
#6 bar = 3'-7"

PARTIAL PLAN

Span 1
Span 2

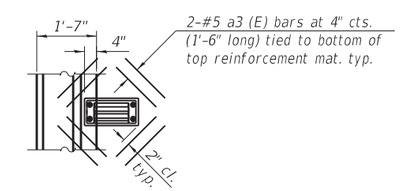

PLAN

Note:
Cut longitudinal reinforcement to clear drainage scuppers.

Notes:
See sheet 8 of 24 for superstructure details and Bill of Material.
Bars indicated thus 20 x 3-#5 etc. indicates 20 lines of bars with 3 lengths per line.

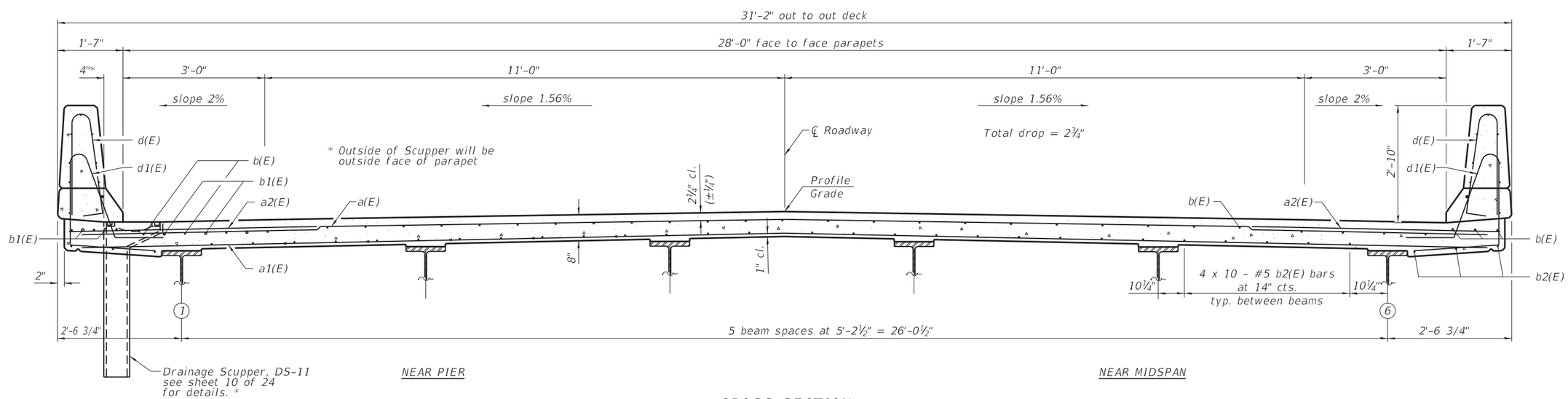

CROSS SECTION

(Looking North)

SI-SB-2-0 8-11-2017

MODEL: Default
FILE NAME: G:\Users\11\111287-03 CH 9 over I80 Bridge Plans\CAD\Survey D366C59\Consultant_Data\Chamlin_2019\CAD_Sheets\0500261-66C59-007-SUPERSTRUCTURE.dgn

CHAMLIN & ASSOCIATES, INC.

USER NAME =	DESIGNED - JKC	REVISED -	
	CHECKED - AJO	REVISED -	
PLOT SCALE =	DRAWN - NV	REVISED -	
PLOT DATE =	CHECKED - JKC	REVISED -	

STATE OF ILLINOIS
DEPARTMENT OF TRANSPORTATION

SUPERSTRUCTURE
STRUCTURE NO. 050-0261

SHEET 7 OF 24 SHEETS

F.A.I. RTE.	SECTION	COUNTY	TOTAL SHEETS	SHEET NO.
80	(50-3) HBR-3	LASALLE	137	67
		CONTRACT NO. 66C59		
	ILLINOIS	FED. AID PROJECT		

10/16/2019 8:23:37 AM

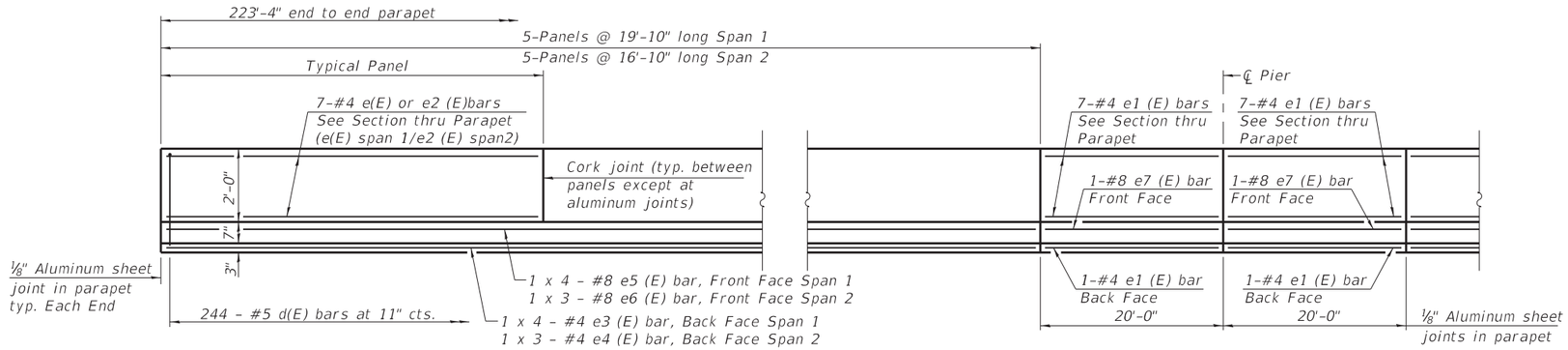

INSIDE ELEVATION OF PARAPET

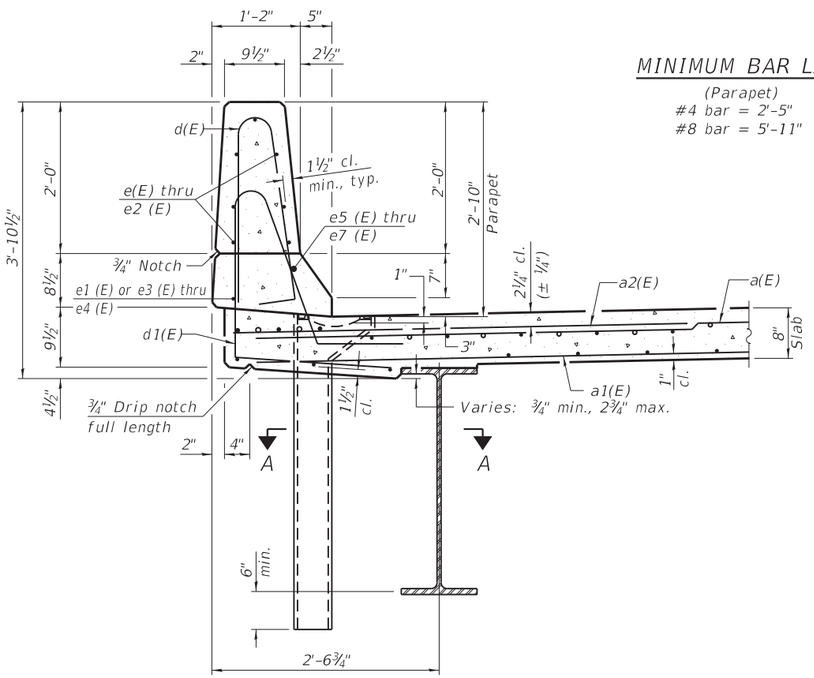

SECTION THRU PARAPET

MINIMUM BAR LAP

(Parapet)
#4 bar = 2'-5"
#8 bar = 5'-11"

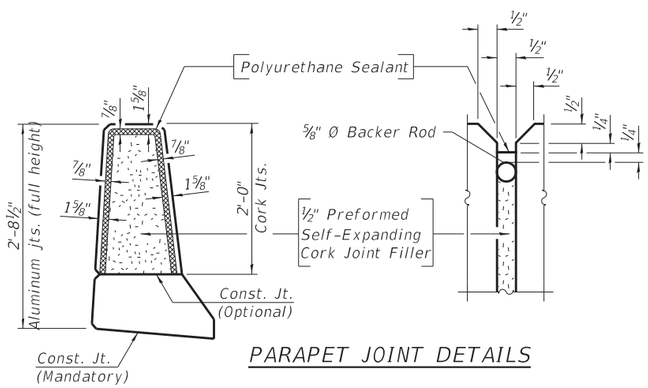

PARAPET JOINT DETAILS

Notes:

Fiberglass pipe shall conform to ASTM D2996, with short-time rupture strength hoop tensile stress of 30,000 p.s.i. minimum.

The exterior surfaces of the floor drains shall be painted according to Article 506 with the finish coat as specified. The exterior surfaces of the drains shall be cleaned according to the Society of Protective Coating's Spec. SSPC-SP1 prior to painting.

The top portion of aluminum floor drains shall be coated to minimize reaction with wet concrete.

The ⅛" Aluminum sheet shall be ASTM B 209 alloy 3003-H14 and coated to minimize reaction with wet concrete. Cost included with Concrete Superstructure.

The Polyurethane Sealant shall be according to Article 1050.04 of the Std. Spec. and the color shall be gray.

Headed bars shall conform to ASTM A970 with threaded attachment; Class HA; and reinforcement bars conforming to ASTM A706. Cost included with Reinforcement Bars, Epoxy Coated.

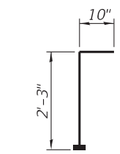

BAR v100(E)
(Headed)

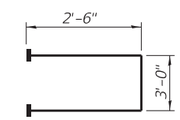

BAR s10(E)
(Headed)

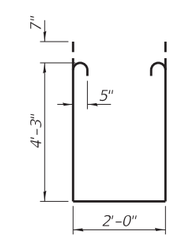

BAR s11(E)

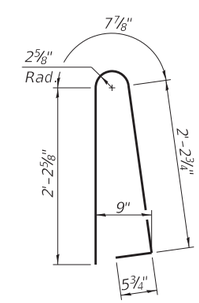

BAR d(E)

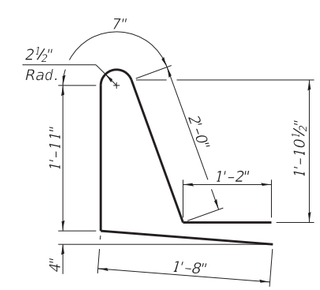

BAR d1(E)

SUPERSTRUCTURE BILL OF MATERIAL

Bar	No.	Size	Length	Shape
a(E)	380	#5	30'-7"	
a1(E)	261	#5	30'-6"	
a2(E)	744	#6	6'-6"	
a3(E)	16	#5	1'-6"	
b(E)	306	#5	27'-11"	
b1(E)	93	#6	27'-2"	
b2(E)	260	#5	25'-6"	
d(E)	488	#5	5'-7"	
d1(E)	488	#5	7'-4"	
e(E)	70	#4	19'-6"	
e1(E)	32	#4	19'-8"	
e2(E)	70	#4	16'-6"	
e3(E)	8	#4	26'-6"	
e4(E)	6	#4	29'-8"	
e5(E)	8	#8	29'-2"	
e6(E)	6	#8	31'-9"	
e7(E)	4	#8	19'-8"	
m10(E)	6	#6	30'-10"	
m11(E)	30	#6	4'-11"	
m12(E)	12	#6	2'-2"	
m13(E)	48	#5	4'-0"	
s10(E)	62	#5	8'-0"	
s11(E)	62	#5	11'-8"	
v100(E)	62	#5	3'-1"	
Reinforcement Bars, Epoxy Coated			Lbs.	59,800
Concrete Superstructure			Cu. Yds.	259.4

Bars indicated thus 1 x 2-#8 etc. indicates 1 line of bars with 2 lengths per line.

MODEL: Default
FILE NAME: G:\Users\11\11287-03 CH 9 over I80 Bridge Plans\CAD\Survey D366C59\Consultant_Data\Chamlin_2019\CAD_Sheets\0500261-66C59-008-SUPER-DET.dgn
10/16/2019 8:24:24 AM

CHAMLIN & ASSOCIATES, INC.

USER NAME =	DESIGNED - JKC	REVISED -	
	CHECKED - AJO	REVISED -	
PLOT SCALE =	DRAWN - NV	REVISED -	
PLOT DATE =	CHECKED - JKC	REVISED -	

STATE OF ILLINOIS
DEPARTMENT OF TRANSPORTATION

SUPERSTRUCTURE DETAILS
STRUCTURE NO. 050-0261

SHEET 8 OF 24 SHEETS

F.A.I. RTE.	SECTION	COUNTY	TOTAL SHEETS	SHEET NO.
80	(50-3) HBR-3	LASALLE	137	68

CONTRACT NO. 66C59

ILLINOIS | FED. AID PROJECT

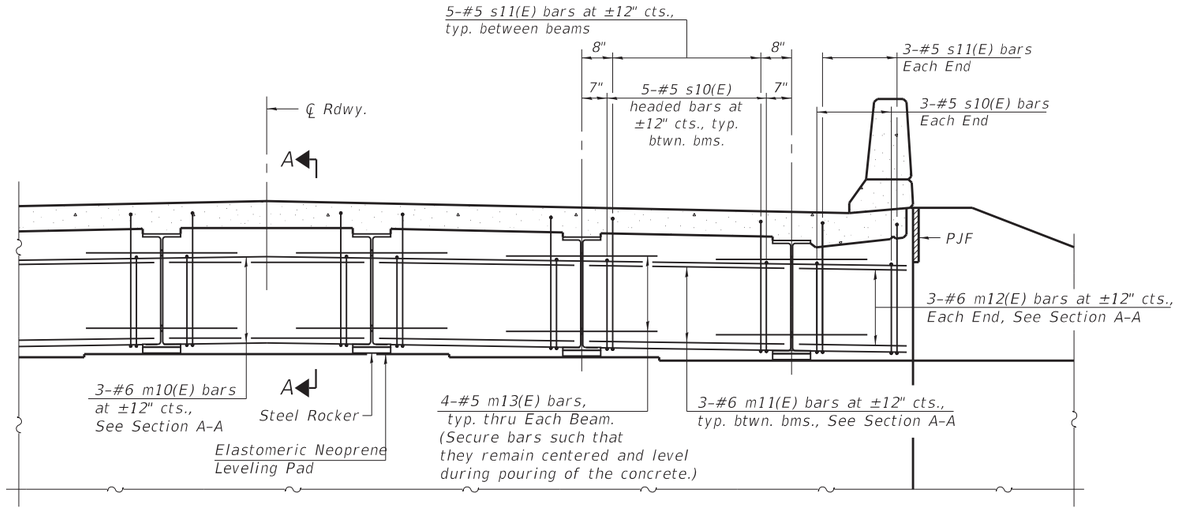

DIAPHRAGM AT ABUTMENT

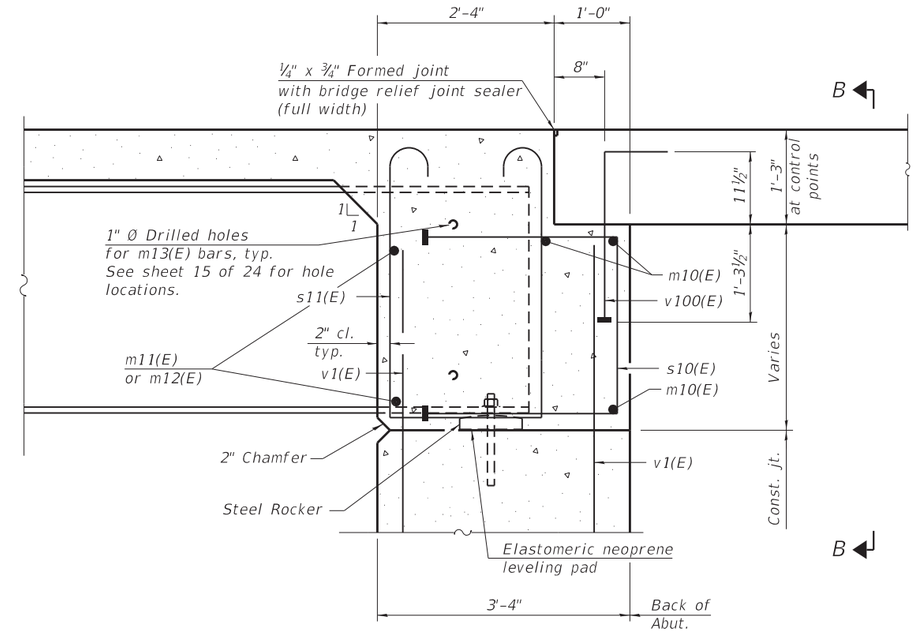

SECTION A-A

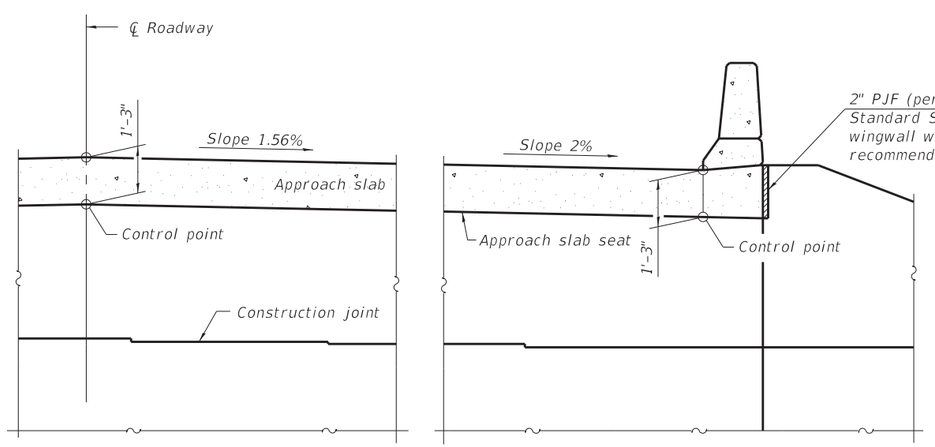

SECTION B-B

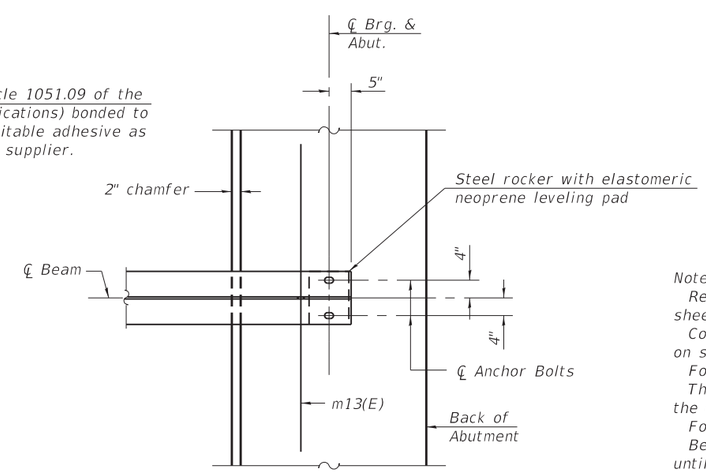

PLAN AT ABUTMENT
(Showing bottom flange of beam)

Notes:
Reinforcement bars in diaphragm are billed with superstructure on sheet 8 of 24.
Concrete in diaphragm is included with Concrete Superstructure on sheet 8 of 24.
For details of bars s10(E), s11(E) and v100(E) see sheet 8 of 24.
The approach slab seat shall have a constant slope determined from the control points shown.
For bearing details see sheet 17 of 24.
Beams shall be braced for stability during erection and remain braced until deck is poured and cured.

DIA-SB2448-0 2-17-2017

MODEL: Default
FILE NAME: G:\Users\1111111287-03 CH 9 over I80 Bridge Plans\CAD\Survey D366C59\Consultant_Data\Chamlin_2019\CAD_Sheets\0500261-66C59-009-DIAPHRAGM-DET.dgn
10/16/2019 8:24:56 AM

CHAMLIN & ASSOCIATES, INC.

USER NAME =	DESIGNED - JKC	REVISED -	
	CHECKED - AJO	REVISED -	
PLOT SCALE =	DRAWN - NV	REVISED -	
PLOT DATE =	CHECKED - JKC	REVISED -	

STATE OF ILLINOIS
DEPARTMENT OF TRANSPORTATION

DIAPHRAGM DETAILS
STRUCTURE NO. 050-0261

SHEET 9 OF 24 SHEETS

F.A.I. RTE.	SECTION	COUNTY	TOTAL SHEETS	SHEET NO.
80	(50-3) HBR-3	LASALLE	137	69

CONTRACT NO. 66C59

ILLINOIS FED. AID PROJECT

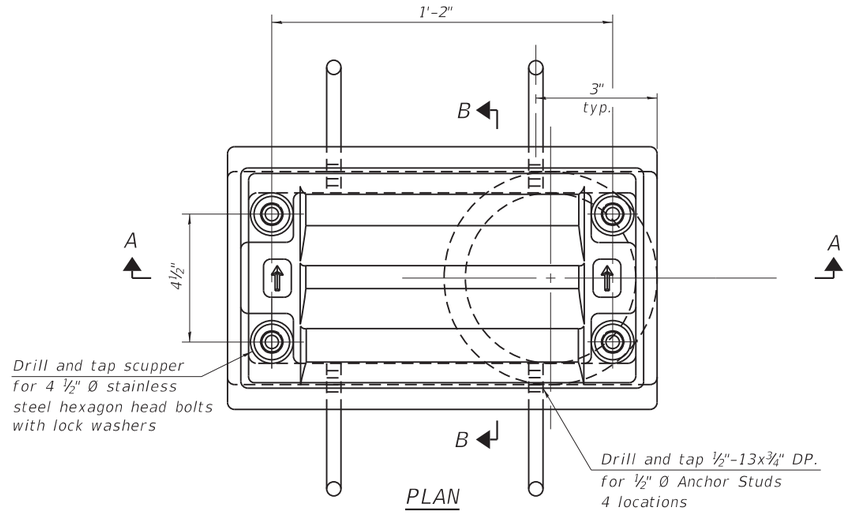

PLAN

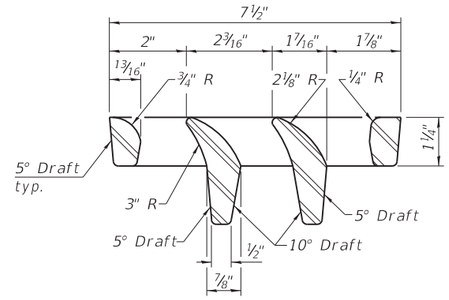

VANE GRATE DETAIL

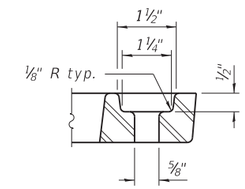

BOLT HOLE DETAIL

Notes:

All cast iron parts shall be gray iron conforming to the requirements of AASHTO M 105, Class 35B.

Bolts, anchor studs, washers and nuts shall conform to the requirements of ASTM A 307 and shall be galvanized according to AASHTO M 232.

Downspouts located on the exterior side of a painted steel fascia beam shall be painted with the finish coat specified for the exterior side of the fascia beam.

As an alternate, bolts, anchor studs, washers and nuts may be stainless steel according to Article 1006.29(d) of the Standard Specifications.

Structural steel weldments of equal sections and of the same configuration may be substituted for the cast iron scupper frame. Fillet or full penetration welds shall be used for the weldments. Details shall be submitted to the Engineer for approval. Structural steel weldments shall not be substituted for the cast iron scupper grate. Structural steel frames and downspouts shall be galvanized according to AASHTO M111.

The Contractor shall take appropriate measures to assure that Protective Coat is not applied to the scupper.

Cost of the Grate, Frame, Downspout, Anchor Studs, Bolts, Washers and Nuts including complete installation of the scupper shall be paid for at the contract unit price each for Drainage Scupper, DS-11.

Alternate fiberglass downspout conforming to ASTM D 2996 with a short-time rupture strength hoop tensile stress of 30,000 psi min. may be used in lieu of the cast iron or steel equivalent.

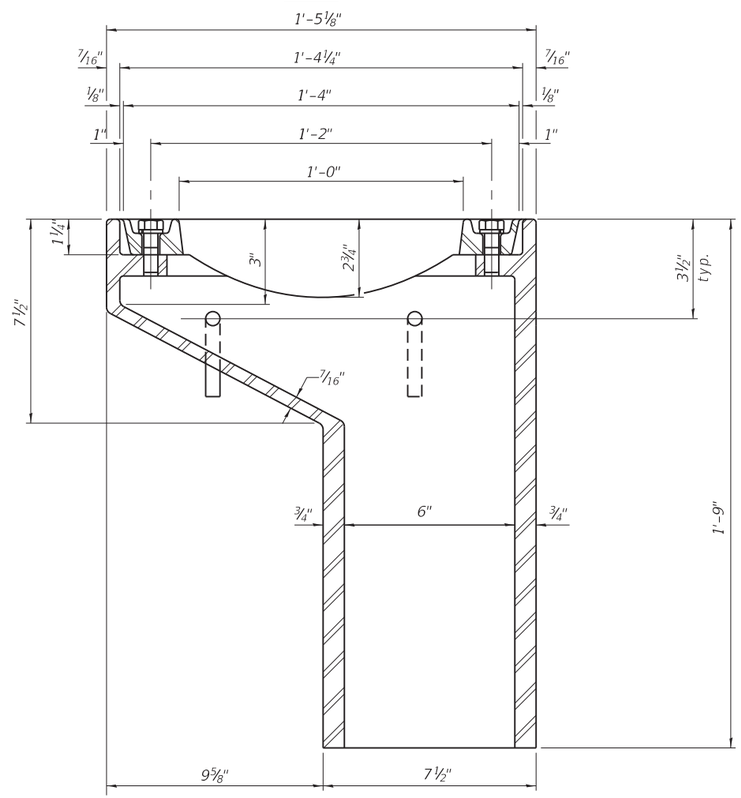

SECTION A-A

See sheet 7 of 24 for scupper location relative to parapet.

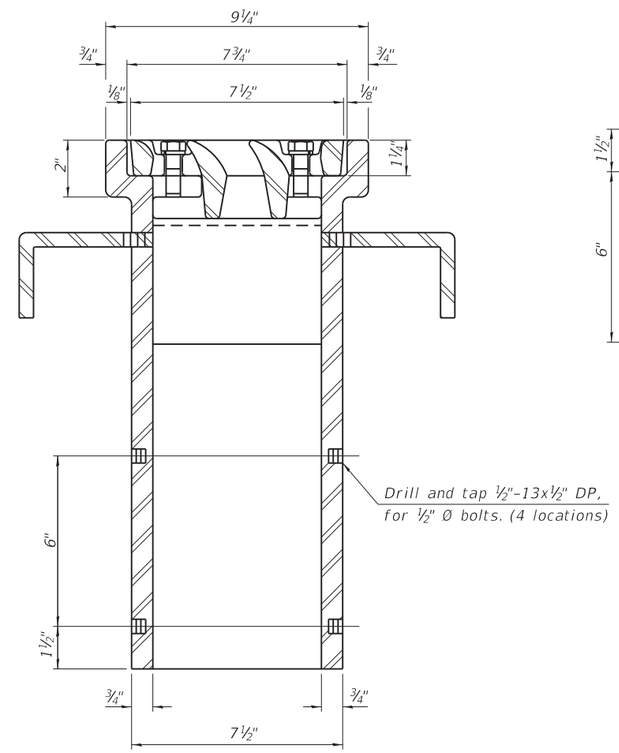

SECTION B-B

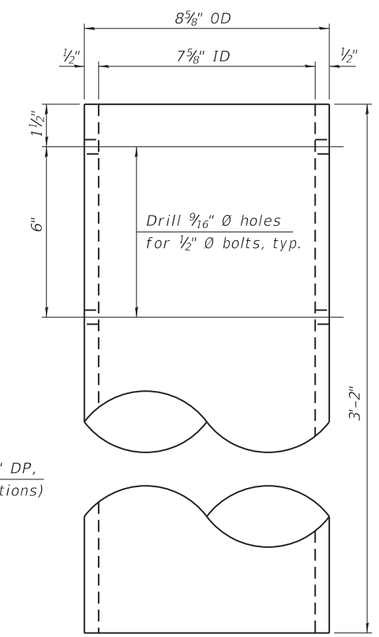

DOWNSPOUT

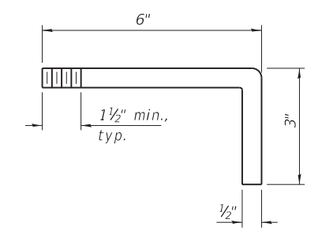

ANCHOR STUD DETAIL

BILL OF MATERIAL

ITEM	UNIT	QUANTITY
Drainage Scupper, DS-11	Each	2

DS-11 2-17-2017

CHAMLIN & ASSOCIATES, INC.

USER NAME =	DESIGNED - JKC	REVISED -	
	CHECKED - AJO	REVISED -	
PLOT SCALE =	DRAWN - NV	REVISED -	
PLOT DATE =	CHECKED - JKC	REVISED -	

STATE OF ILLINOIS
DEPARTMENT OF TRANSPORTATION

DRAINAGE SCUPPER, DS-11
STRUCTURE NO. 050-0261

SHEET 10 OF 24 SHEETS

F.A.I. RTE.	SECTION	COUNTY	TOTAL SHEETS	SHEET NO.
80	(50-3) HBR-3	LASALLE	137	70

CONTRACT NO. 66C59

ILLINOIS FED. AID PROJECT

MODEL: Default
FILE NAME: G:\Users\1111111287-03 CH 9 over I80 Bridge Plans\CAD\Survey D366C59\Consultant_Data\Chamlin_2019\CAD_Sheets\0500261-66C59-010-DRAIN-SCUPPER.dgn

10/16/2019 8:25:43 AM

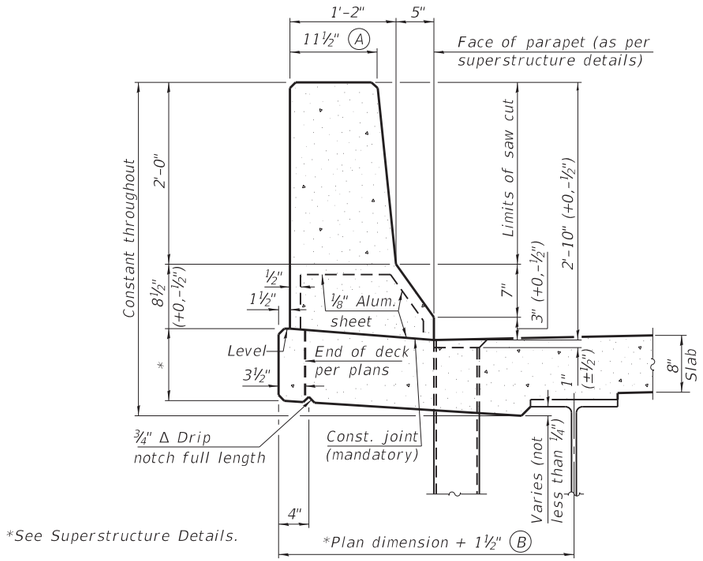

34" F SHAPE PARAPET SECTION

(Showing dimensions)

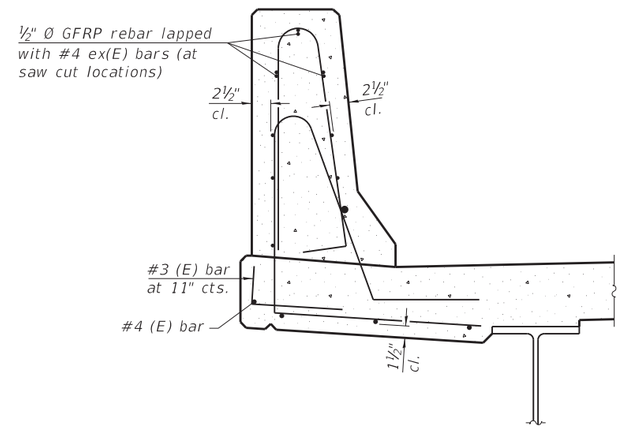

SECTION

(34" parapet shown - 42" parapet similar)
(Showing reinforcement clearances for slip forming and additional reinforcement bars)

GENERAL NOTES

All dimensions shall remain the same as shown on superstructure details, except dimensions A and B which are to be revised as shown to provide additional clearance. Additional concrete needed to revise dimension A and B = 0.0165 cu. yds./ft. for 34" parapet or = 0.0223 cu. yds./ft. for 42" parapet.

Place aluminum sheet in curb portion at and near piers. Full thickness saw cut at all joint locations in lieu of cork joint filler.

Steel superstructure shown. Other superstructure types similar.

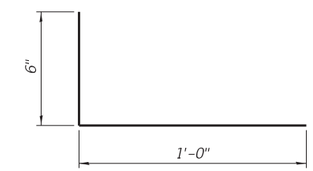

#3 (E) BAR

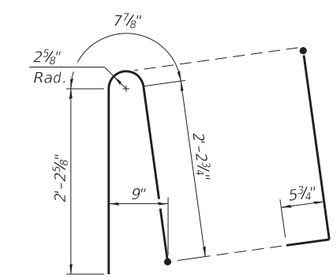

ALTERNATE BAR d(E)

(For 34" parapet when conduit is present)

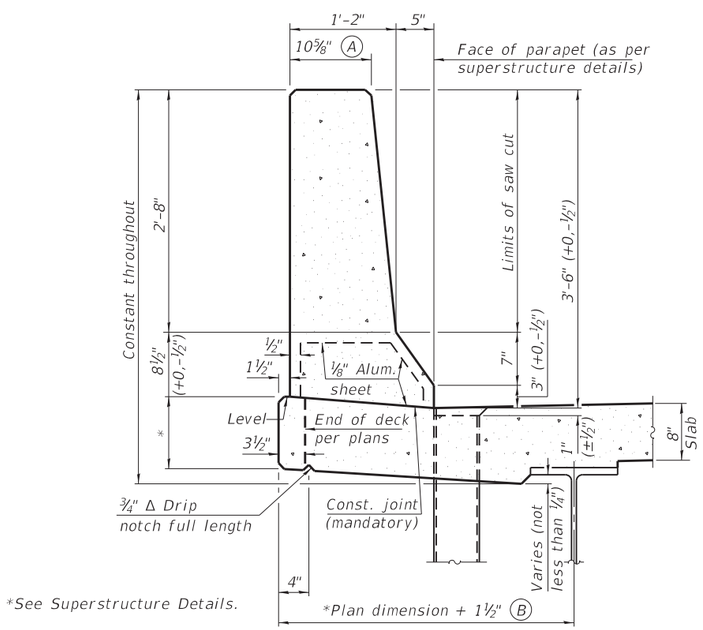

42" F SHAPE PARAPET SECTION

(Showing dimensions)

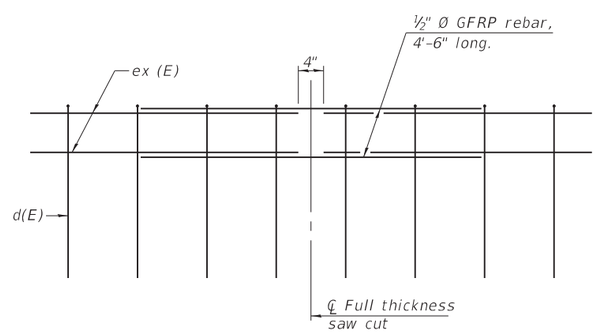

GFRP REBAR STIFFENING DETAIL

(Place as shown in parapet section at each parapet joint location.)

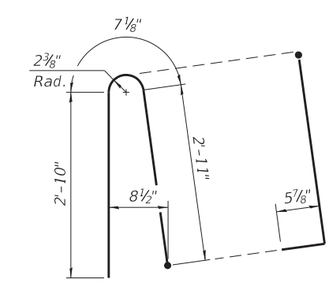

ALTERNATE BAR d(E)

(For 42" parapet when conduit is present)

SFP 34-42 2-17-2017

MODEL: Default
FILE NAME: G:\Users\1111\1287-03 CH 9 over I80 Bridge Plans\CAD\Survey D366C59\Consultant_Data\Chamlin_2019\CAD_Sheets\0500261-66C59-011-CONC-PARAPET.dgn
10/16/2019 8:26:24 AM

CHAMLIN & ASSOCIATES, INC.

USER NAME =	DESIGNED - JKC	REVISED -	
	CHECKED - AJO	REVISED -	
PLOT SCALE =	DRAWN - NV	REVISED -	
PLOT DATE =	CHECKED - JKC	REVISED -	

STATE OF ILLINOIS
DEPARTMENT OF TRANSPORTATION

CONCRETE PARAPET SLIPFORMING OPTION
STRUCTURE NO. 050-0261

SHEET 11 OF 24 SHEETS

F.A.I. RTE.	SECTION	COUNTY	TOTAL SHEETS	SHEET NO.
80	(50-3) HBR-3	LASALLE	137	71
		CONTRACT NO. 66C59		
		ILLINOIS	FED. AID PROJECT	

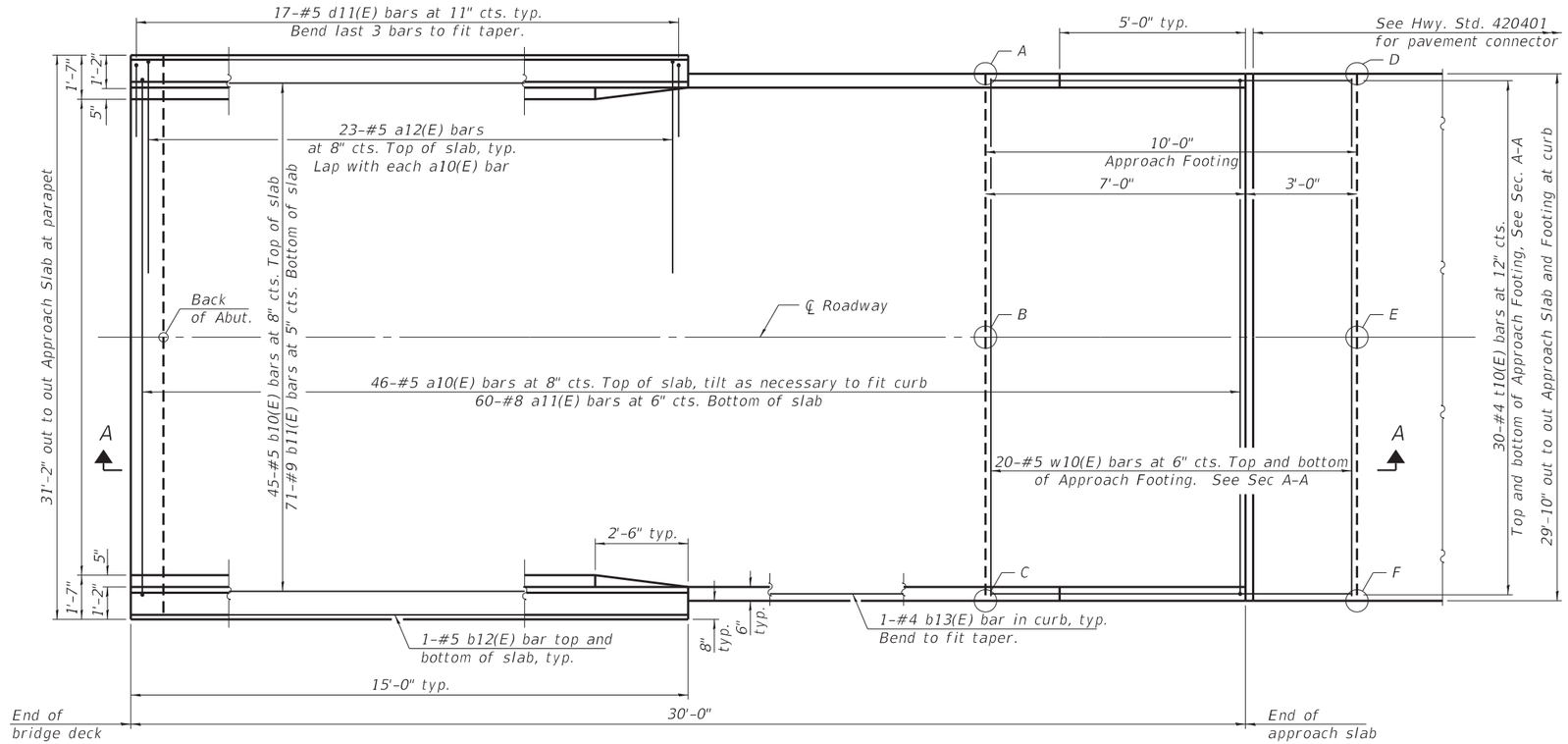

PLAN

N (North Approach)

N (South Approach)

TOP AND BOTTOM ELEVATIONS FOR APPROACH FOOTING

	South Approach		North Approach	
Point	Top	Bottom	Top	Bottom
A	654.73	653.90	654.70	653.87
B	654.98	654.15	654.95	654.12
C	654.73	653.90	654.70	653.87
D	654.64	653.80	654.61	653.77
E	654.89	654.05	654.86	654.02
F	654.64	653.80	654.61	653.77

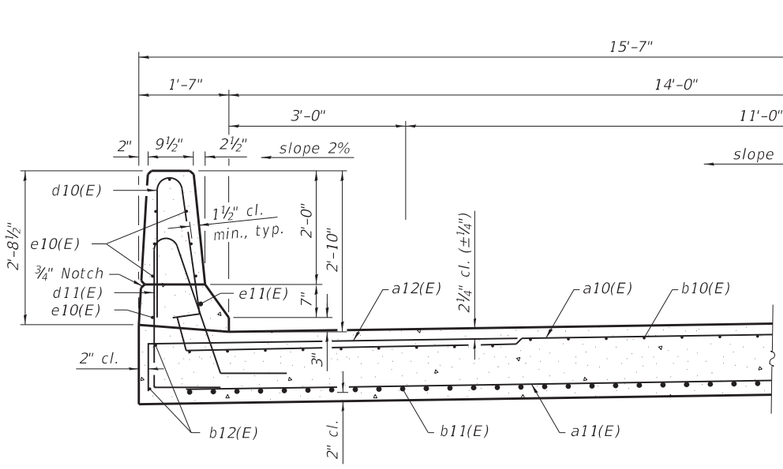

NEAR ABUTMENT

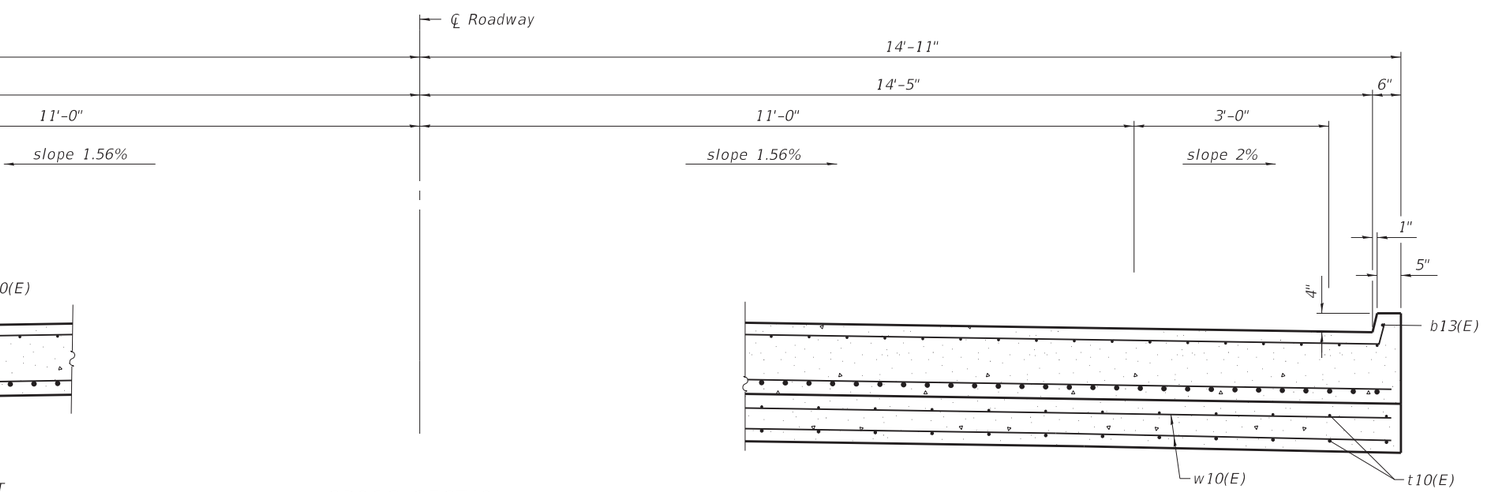

CROSS SECTION

(Looking North)

AT APPROACH FOOTING

BAIA-CIP-34FS-0 8-11-2017

(Sheet 1 of 2)

USER NAME =	DESIGNED - JKC	REVISED -	
	CHECKED - AJO	REVISED -	
PLOT SCALE =	DRAWN - NV	REVISED -	
PLOT DATE =	CHECKED - JKC	REVISED -	

CHAMLIN & ASSOCIATES, INC.

STATE OF ILLINOIS
DEPARTMENT OF TRANSPORTATION

BRIDGE APPROACH SLAB DETAILS
STRUCTURE NO. 050-0261

SHEET 12 OF 24 SHEETS

F.A.I. RTE.	SECTION	COUNTY	TOTAL SHEETS	SHEET NO.
80	(50-3) HBR-3	LASALLE	137	72

CONTRACT NO. 66C59

ILLINOIS FED. AID PROJECT

MODEL: Default
FILE NAME: G:\Users\1111111287-03 CH 9 over I80 Bridge Plans\CAD\Survey D366C59\Consultant_Data\Chamlin_2019\CAD_Sheets\0500261-66C59-012-013-APPROACH-SLAB-DET.dgn

10/16/2019 8:27:02 AM

Notes:

The joint opening shall be adjusted for temperature per Article 520.04 of the Standard Specifications. However, since this detail is for jointless structures, the length of bridge used to calculate the adjustment shall be equal to half the total bridge length plus the length of the bridge approach slab.

Parapet concrete shall be paid for as Concrete Superstructure.

Approach slab shall be paid for as Concrete Superstructure (Approach Slab).

Approach footing concrete shall be paid for as Concrete Structures.

The approach footing maximum applied service bearing pressure (Qmax) = 2.0 ksf.

Cost of excavation for approach footing included with Concrete Structures.

For Granular Backfill for Structures and drainage treatment details, see sheet 2 of 24.

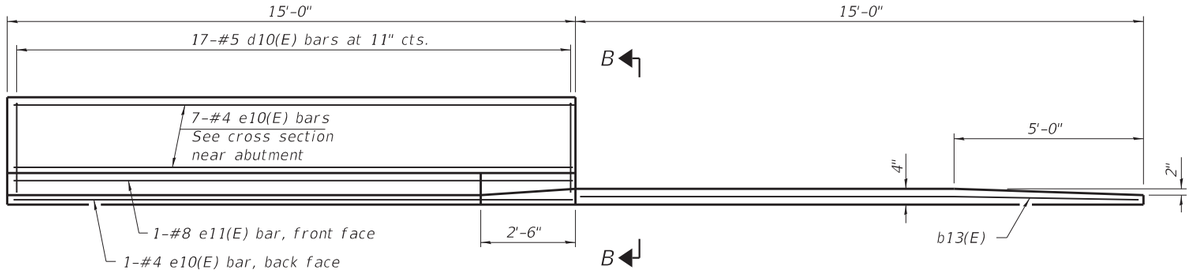

INSIDE ELEVATION OF PARAPET AND CURB

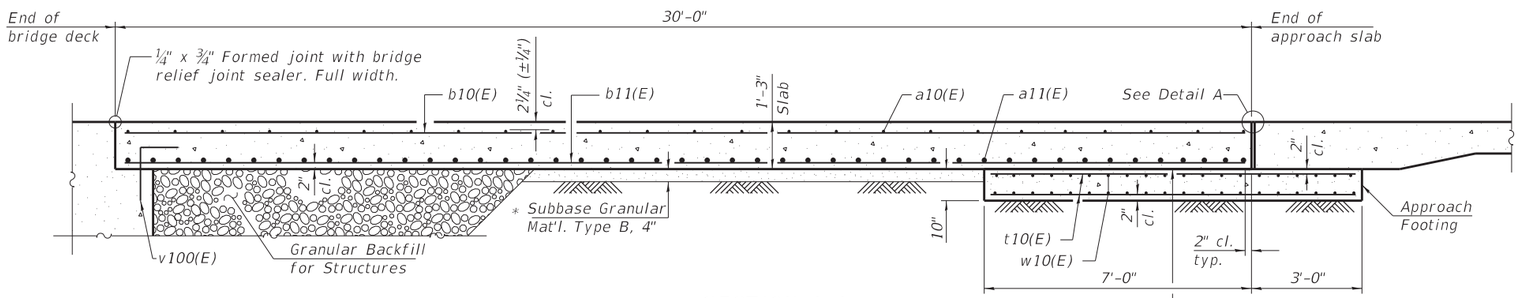

SECTION A-A

* 10 mil. Polyethylene bond breaker on steel trowel finish

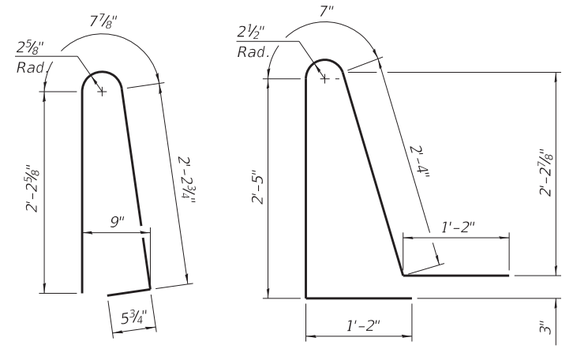

BAR d10(E)

BAR d11(E)

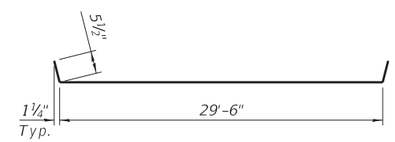

BAR a10(E)

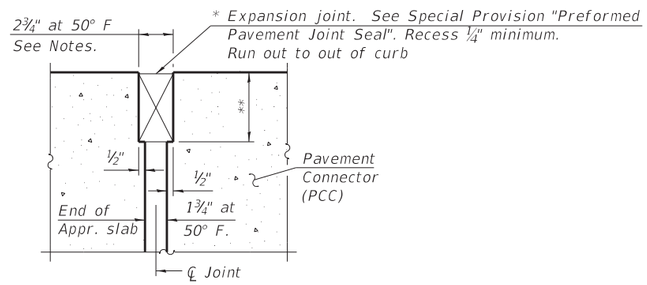

DETAIL A

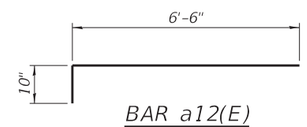

BAR a12(E)

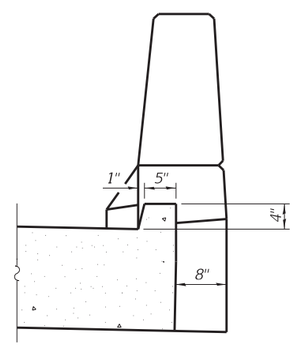

VIEW B-B

TWO APPROACHES
BILL OF MATERIAL

Bar	No.	Size	Length	Shape
a10(E)	92	#5	30'-5"	
a11(E)	120	#8	29'-6"	
a12(E)	92	#5	7'-4"	
b10(E)	90	#5	29'-8"	
b11(E)	142	#9	29'-8"	
b12(E)	8	#5	14'-8"	
b13(E)	4	#4	14'-8"	
d10(E)	68	#5	5'-7"	
d11(E)	68	#5	7'-8"	
e10(E)	32	#4	14'-8"	
e11(E)	4	#8	14'-8"	
t10(E)	60	#4	9'-8"	
w10(E)	80	#5	29'-6"	
Concrete Superstructure			Cu. Yd.	6.6
Concrete Superstructure (Approach Slab)			Cu. Yd.	85.3
Concrete Structures			Cu. Yd.	18.4
Reinforcement Bars, Epoxy Coated			Pound	34600

* Cost included with Concrete Superstructure (Approach Slab).

** Per manufacturer recommendations

BAIA-CIP-34FS-0 8-11-2017

(Sheet 2 of 2)

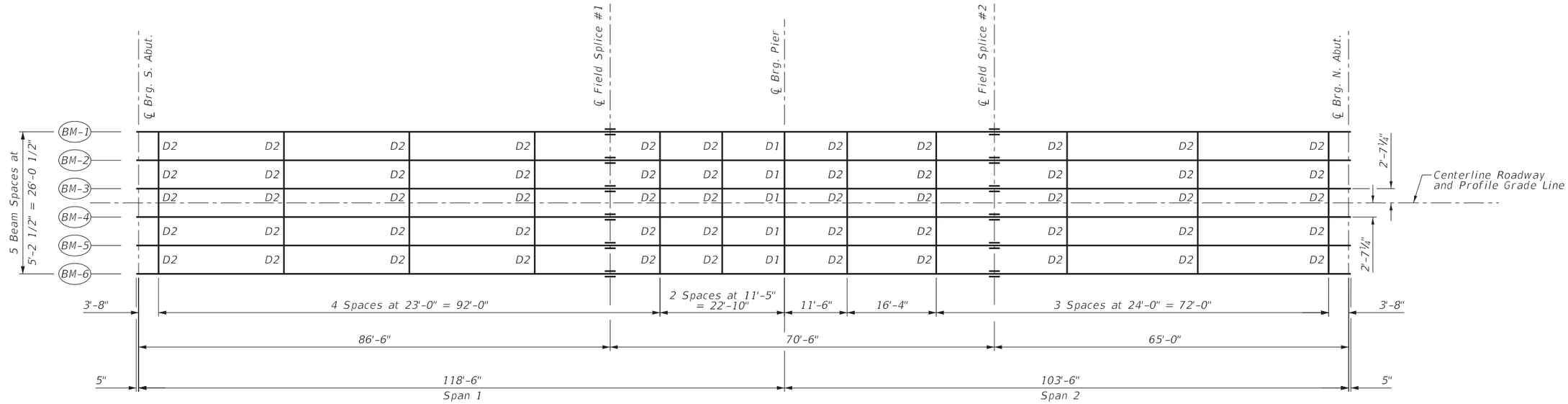

PLAN

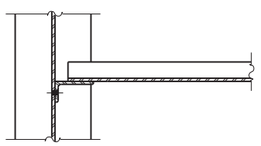

SECTION A-A

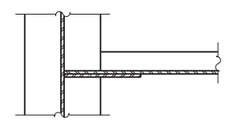

SECTION B-B

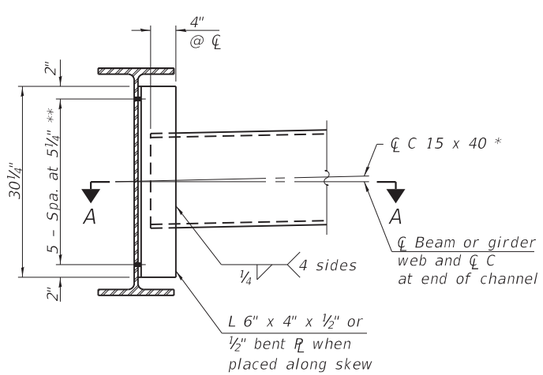

INTERIOR DIAPHRAGM - D2 (55 REQUIRED)

Note:
* C 15 x 50 channels are permitted to facilitate material acquisition. Calculated weight of structural steel is based on the lighter section.
The alternate, if utilized, shall be provided at no additional cost to the Department.
** ¾" Ø HS bolts, 15/16" Ø holes

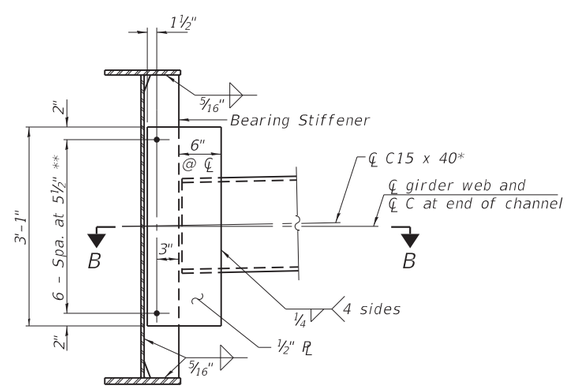

INTERIOR DIAPHRAGM - D1 (5 REQUIRED)

Note:
** ¾" Ø HS bolts, 15/16" Ø holes

Note:
All cross frames or diaphragms shall be installed as steel is erected and secured with erection pins and bolts except as otherwise noted. Individual cross frames or diaphragms at supports may be temporarily disconnected to install bearing anchor rods.
Two hardened washers required for each set of oversized holes.

MODEL: Default
FILE NAME: G:\Users\11\1111287-03 CH 9 over I80 Bridge Plans\CAD\Survey D366C59\Consultant_Data\Chamlin_2019\CAD_Sheets\0500261-66C59-014-FRAMING-PLAN.dgn
10/16/2019 8:27:53 AM

CHAMLIN & ASSOCIATES, INC.	USER NAME =	DESIGNED - JKC	REVISED -	STATE OF ILLINOIS DEPARTMENT OF TRANSPORTATION	FRAMING PLAN & DETAILS STRUCTURE NO. 050-0261
		CHECKED - AJO	REVISED -		
	PLOT SCALE =	DRAWN - NV	REVISED -		
	PLOT DATE =	CHECKED - JKC	REVISED -		SHEET 14 OF 24 SHEETS

F.A.I. RTE.	SECTION	COUNTY	TOTAL SHEETS	SHEET NO.
80	(50-3) HBR-3	LASALLE	137	74
		CONTRACT NO. 66C59		
		ILLINOIS FED. AID PROJECT		

TOP OF WEB ELEVATIONS (FOR FABRICATION ONLY)

LOCATION / BEAM	BM-1	BM-2	BM-3	BM-4	BM-5	BM-6
Centerline Brg. S. Abut.	655.41	655.50	655.58	655.58	655.50	655.41
Centerline Splice #1	655.85	655.94	656.02	656.02	655.94	655.85
Centerline Brg. Pier	655.78	655.87	655.95	655.95	655.87	655.78
Centerline Splice #2	655.70	655.79	655.87	655.87	655.79	655.70
Centerline Brg. N Abut.	655.38	655.47	655.55	655.55	655.47	655.38

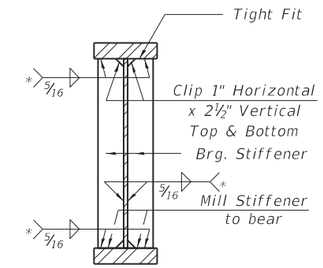

SECTION AT PIER

* Terminate ¼" (±⅛") from the end of plate intersects.

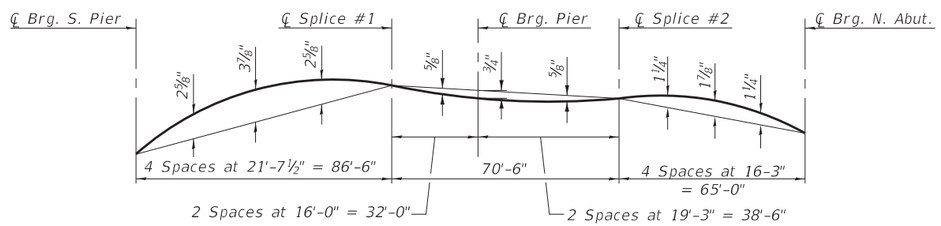

CAMBER DIAGRAM

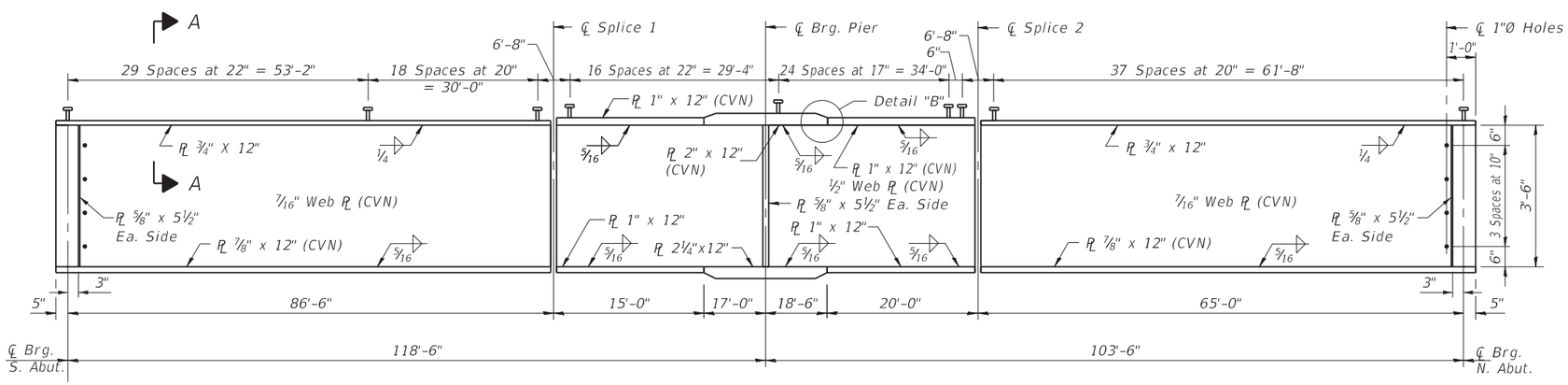

GIRDER ELEVATION

"CVN" denotes Charpy-V-Notch impact energy requirements, zone 2.

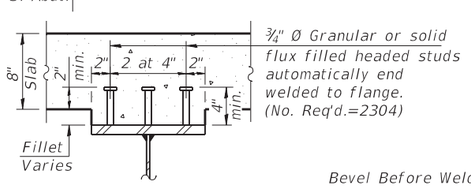

SECTION A-A

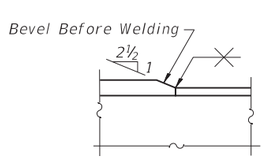

DETAIL "B"

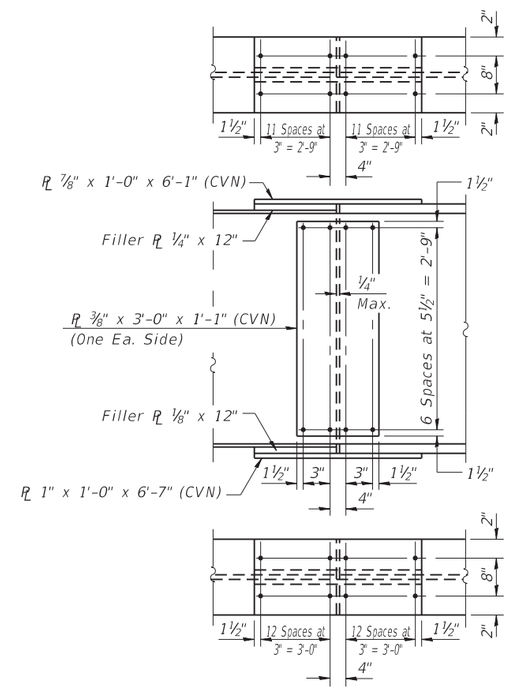

FIELD SPLICE DETAIL

G-1

2-17-2017

USER NAME =	DESIGNED - JKC	REVISED -	
	CHECKED - AJO	REVISED -	
PLOT SCALE =	DRAWN - NV	REVISED -	
PLOT DATE =	CHECKED - JKC	REVISED -	

CHAMLIN & ASSOCIATES, INC.

STATE OF ILLINOIS
DEPARTMENT OF TRANSPORTATION

GIRDER ELEVATION & DETAILS
STRUCTURE NO. 050-0261

SHEET 15 OF 24 SHEETS

F.A.I. RTE.	SECTION	COUNTY	TOTAL SHEETS	SHEET NO.
80	(50-3) HBR-3	LASALLE	137	75

CONTRACT NO. 66C59

ILLINOIS | FED. AID PROJECT

MODEL: Default
FILE NAME: G:\Users\1111111287-03 CH 9 over I80 Bridge Plans\CAD\Survey D366C59\Consultant_Data\Chamlin_2019\CAD_Sheets\0500261-66C59-015-STRUC-STEEL.dgn

10/16/2019 8:28:28 AM

INTERIOR GIRDER MOMENT TABLE				
		0.4 Sp. 1	Pier	0.6 Sp. 2
Is	(in^4)	11611.4	27872.5	11611.4
Ic(n)	(in^4)	28178	–	28178
Ic(3n)	(in^4)	20709.3	–	20709.3
Ic(cr)	(in^4)	–	31397.8	–
Ss	(in^3)	552.6	1250.6	552.6
Sc(n)	(in^3)	761.3	–	761.3
Sc(3n)	(in^3)	693.5	–	693.5
Sc(cr)	(in^3)	–	1303.0	–
DC1	(k/')	0.69	0.70	0.70
MDC1	('k)	633.0	1353.5	362.6
DC2	(k/')	0.150	0.150	0.150
MDC2	('k)	143.0	274.5	83.0
DW	(k/')	0.23	0.23	0.23
MDW	('k)	222.4	426.9	129.2
LLDF		0.422	0.456	0.436
M_{LL+IM}	('k)	1133.4	1427.1	1012.0
Mu (Strength I)	('k)	3287.1	5172.9	2521.8
Øf Mn	('k)	3647.8	6134.6	3863.6
fs DC1	(ksi)	13.75	12.99	7.87
fs DC2	(ksi)	2.47	2.53	1.44
fs DW	(ksi)	3.85	3.93	2.24
fs (LL+IM)	(ksi)	17.86	13.14	15.95
fs (Service II)	(ksi)	43.29	36.53	32.28
0.95Rh Fyf	(ksi)	47.5	47.5	47.5
fs (Total)(Strength I)	(ksi)	–	–	–
Øf Fn	(ksi)	–	–	–
Vf	(k)	26.6	–	26.5

INTERIOR GIRDER REACTION TABLE							
		South Abut.		Pier		North Abut.	
		Interior	Exterior	Interior	Exterior	Interior	Exterior
LLDF		0.612	0.612	0.612	0.612	0.612	0.612
OCF		–	1.0	–	–	–	1.0
RDC1	(k)	29.9	29.9	102.2	102.2	23.3	23.3
RDC2	(k)	6.6	6.6	21.6	21.6	5.1	5.1
RDW	(k)	10.2	10.2	33.6	33.6	7.9	7.9
R_{LL}	(k)	59.1	59.1	118.1	118.1	56.6	56.6
R_{IM}	(k)	13.0	13.0	22.2	22.2	12.9	12.9
RTotal	(k)	118.8	118.8	297.7	297.7	105.8	105.8

Is, Ss: Non-composite moment of inertia and section modulus of the steel section used for computing fs(Total-Strength I, and Service II) due to non-composite dead loads ($in.^4$ and $in.^3$).

Ic(n), Sc(n): Composite moment of inertia and section modulus of the steel and deck based upon the modular ratio, "n", used for computing fs(Total-Strength I, and Service II) in uncracked sections due to short-term composite live loads ($in.^4$ and $in.^3$).

Ic(3n), Sc(3n): Composite moment of inertia and section modulus of the steel and deck based upon 3 times the modular ratio, "3n", used for computing fs(Total-Strength I, and Service II) in uncracked sections, due to long-term composite (superimposed) dead loads ($in.^4$ and $in.^3$).

Ic(cr), Sc(cr): Composite moment of inertia and section modulus of the steel and longitudinal deck reinforcement, used for computing fs (Total-Strength I and Service II) in cracked sections, due to both short-term composite live loads and long-term composite (superimposed) dead loads ($in.^4$ and $in.^3$).

DC1: Un-factored non-composite dead load (kips/ft.).

MDC1: Un-factored moment due to non-composite dead load (kip-ft.).

DC2: Un-factored long-term composite (superimposed excluding future wearing surface) dead load (kips/ft.).

MDC2: Un-factored moment due to long-term composite (superimposed excluding future wearing surface) dead load (kip-ft.).

DW: Un-factored long-term composite (superimposed future wearing surface only) dead load (kips/ft.).

MDW: Un-factored moment due to long-term composite (superimposed future wearing surface only) dead load (kip-ft.).

M_{LL+IM}: Un-factored live load moment plus dynamic load allowance (impact) (kip-ft.).

Mu (Strength I): Factored design moment (kip-ft.).
$1.25\ (MDC1 + MDC2) + 1.5\ MDW + 1.75\ M_{LL+IM}$

Øf Mn: Compact composite positive moment capacity computed according to Article 6.10.7.1 or non-slender negative moment capacity according to Article A6.1.1 or A6.1.2 (kip-ft).

fs DC1: Un-factored stress at edge of flange for controlling steel flange due to vertical non-composite dead loads as calculated below (ksi).
MDC1/ Snc

fs DC2: Un-factored stress at edge of flange for controlling steel flange due to vertical composite dead loads as calculated below (ksi).
MDC2/ Sc(3n) or MDC2/ Sc(cr) as applicable.

fs DW: Un-factored stress at edge of flange for controlling steel flange due to vertical composite future wearing surface loads as calculated below (ksi).
MDW/ Sc(3n) or MDW/ Sc(cr) as applicable.

fs (LL+IM): Un-factored stress at edge of flange for controlling steel flange due to vertical composite live load plus impact loads as calculated below (ksi).
M_{LL+IM} / Sc(n) or M_{LL+IM} / Sc(cr) as applicable.

fs (Service II): Sum of stresses as computed below (ksi).
fsDC1 + fsDC2 + fsDW + 1.3 $fs(_{LL+IM})$

0.95RhFyf: Composite stress capacity for Service II loading according to Article 6.10.4.2 (ksi).

fs (Total)(Strength I): Sum of stresses as computed below on non-compact section (ksi).
1.25 (fsDC1 + fsDC2) + 1.5 fsDW + 1.75 $fs(_{LL+IM})$

Øf Fn: Non-Compact composite positive or negative stress capacity for Strength I loading according to Article 6.10.7 or 6.10.8 (ksi).

Vf: Maximum factored shear range in span computed according to Article 6.10.10.

LLDF: Live Load Distribution Factor

OCF: Obtuse Correction Factor

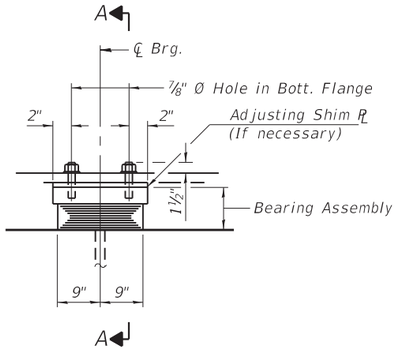

ELEVATION AT PIER

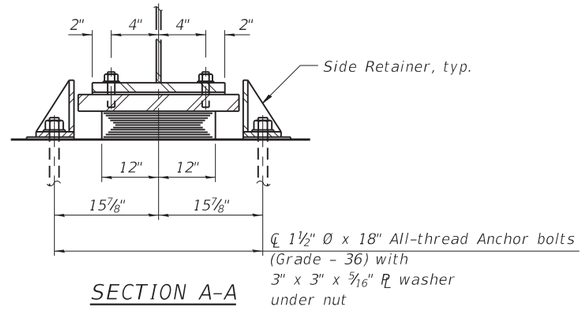

SECTION A-A

TYPE I ELASTOMERIC EXP. BRG.

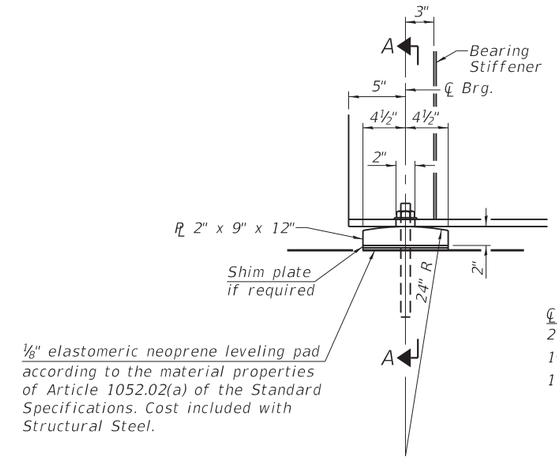

ELEVATION AT ABUTMENT

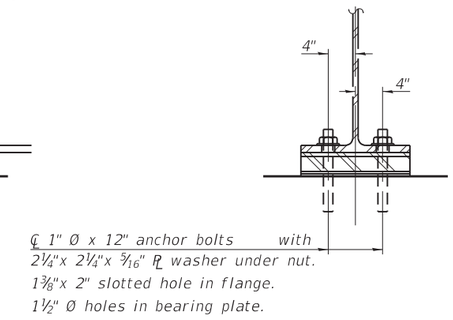

SECTION A-A

FIXED BEARING

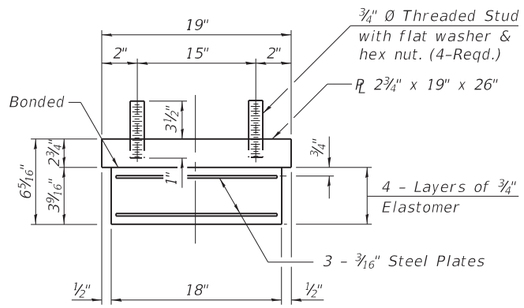

BEARING ASSEMBLY

Note:
Shim plates shall not be placed under Bearing Assembly.

Notes:
Side retainers and other steel members required for the elastomeric bearing assembly shall be included in the cost of Elastomeric Bearing Assembly, Type I.
Anchor bolts and side retainers at all supports shall be installed as each member is erected unless an equivalent temporary means of lateral restraint is used.

Notes:
Anchor bolts shall be according to Article 521.06 of the Standard Specifications.
Beams shall be braced for stability during erection and remain braced until deck is poured and cured.
Anchor bolts at all supports shall be installed as each member is erected unless an equivalent temporary means of lateral restraint is used.

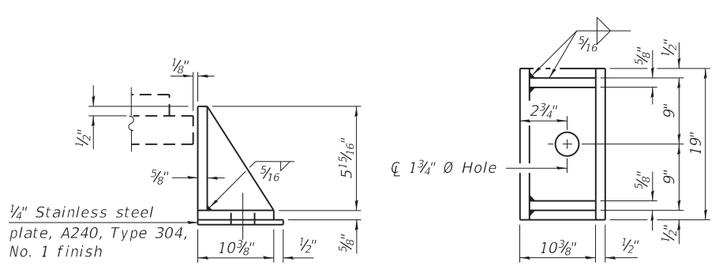

SIDE RETAINER

Equivalent rolled angle with stiffeners will be allowed in lieu of welded plates.

BILL OF MATERIAL

Item	Unit	Total
Elastomeric Bearing Assembly Type I	Each	6
Anchor Bolts 1"	Each	24
Anchor Bolts 1½"	Each	12

MODEL: Default
FILE NAME: 0500261-66C59-017-BEARING-DET.dgn

CHAMLIN & ASSOCIATES, INC.

USER NAME =	DESIGNED - JKC	REVISED -	
	CHECKED - AJO	REVISED -	
PLOT SCALE =	DRAWN - NV	REVISED -	
PLOT DATE =	CHECKED - JKC	REVISED -	

STATE OF ILLINOIS
DEPARTMENT OF TRANSPORTATION

BEARING DETAILS
STRUCTURE NO. 050-0261

SHEET 17 OF 24 SHEETS

F.A.I. RTE.	SECTION	COUNTY	TOTAL SHEETS	SHEET NO.
80	(50-3) HBR-3	LASALLE	137	77

CONTRACT NO. 66C59

ILLINOIS FED. AID PROJECT

10/16/2019 8:29:43 AM

Notes:
Pour steps monolithically with cap.
Space reinforcement in cap to miss anchor bolts.

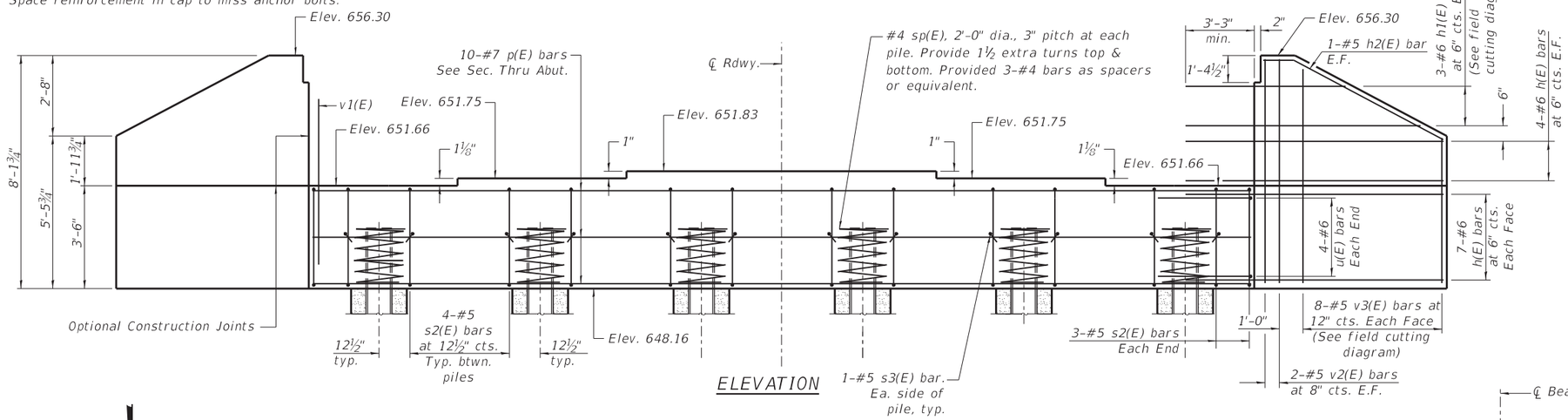

ELEVATION

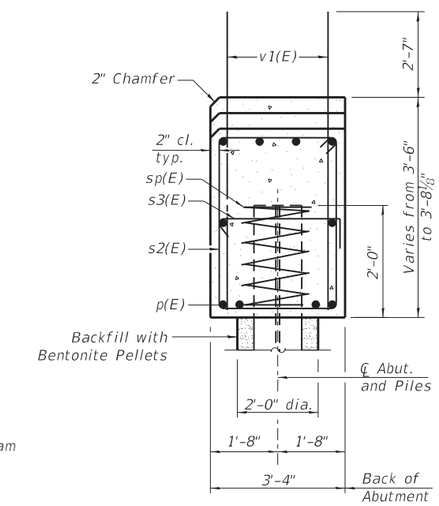

SEC. THRU ABUT.

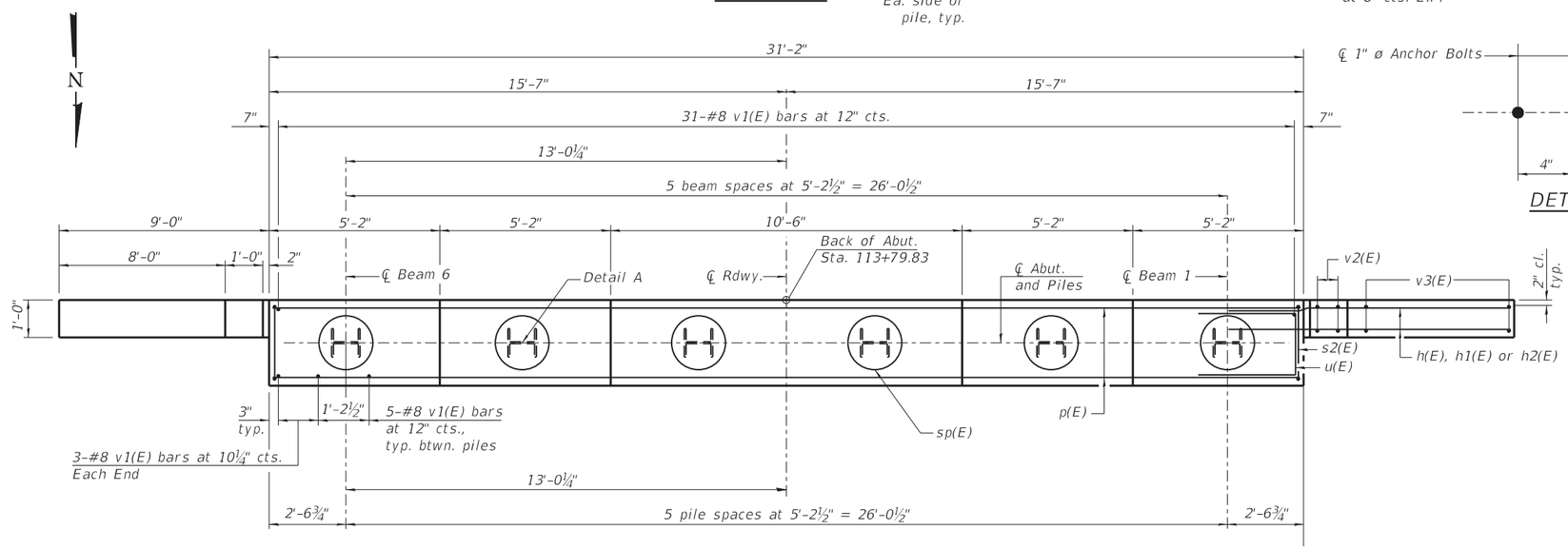

PLAN

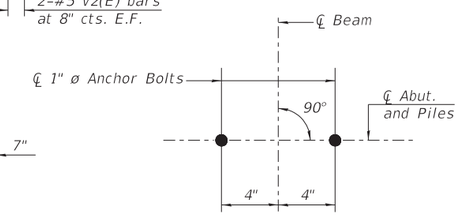

DETAIL A

BILL OF MATERIAL

Bar	No.	Size	Length	Shape
h(E)	44	#6	12'-1"	
h1(E)	6	#6	19'-4"	
h2(E)	4	#5	9'-1"	
p(E)	10	#7	30'-10"	
s2(E)	26	#5	13'-3"	
s3(E)	12	#5	4'-0"	
* sp(E)	6	#4	2'-0"	
u(E)	8	#6	10'-6"	
v1(E)	62	#8	5'-11"	
v2(E)	8	#5	7'-9"	
v3(E)	16	#5	12'-8"	
Structure Excavation			Cu. Yd.	113
Concrete Structures			Cu. Yd.	18.5
Reinforcement Bars, Epoxy Coated			Pound	3,710
Furnishing Steel Piles, HP12x74			Foot	408
Driving Piles			Foot	408

For details of piles see sheet 21 of 24.
*Length is height of spiral

PILE DATA

Type: Steel HP12x74
Nominal Required Bearing: 589 kips
Factored Resistance Available: 324 kips
Est. Length: 68 ft.
No. Production Piles: 6
No. Test Piles: 0

Piles shall be driven through 24" diameter precored holes extending to Elevation 638.16 according to Article 512.09(c) of the Standard Specifications except as noted. Void space outside pile shall be backfilled with bentonite pellets per manufacturer's specifications. Cost included in Driving Piles.

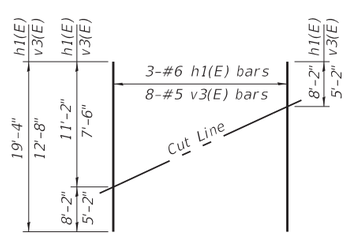

FIELD CUTTING DIAGRAM

Order h1(E) and v3(E) full length. Cut as shown and use remainder of bars in opposite face.

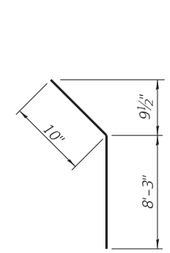

BAR h2(E)

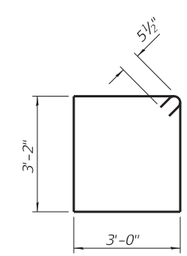

BAR s2(E)

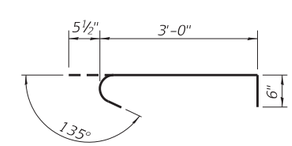

BAR s3(E)

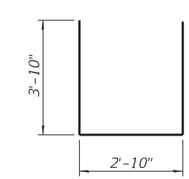

BAR u(E)

MODEL: Default
FILE NAME: P:\Effingham\2685x01 - CH 9 at I-30 SGR - IDOT D3\Work Order #6\CAD\Sheets\ReFeed\SXX_R2685_01_Integral-Abutments_South.dgn

CDI CIVIL DESIGN, INC. WBE / DBE EFFINGHAM, IL LICENSE #184.003222	USER NAME = wkistler	DESIGNED - KM	REVISED -
		CHECKED - TJZ	REVISED -
	PLOT SCALE = 40.0000 ' / in.	DRAWN - DMM	REVISED -
	PLOT DATE = 8/14/2019	CHECKED - ADB	REVISED -

STATE OF ILLINOIS
DEPARTMENT OF TRANSPORTATION

SOUTH ABUTMENT
STRUCTURE NO. 050-0261

SHEET 18 OF 24 SHEETS

F.A.I RTE.	SECTION	COUNTY	TOTAL SHEETS	SHEET NO.
80	(50-3) HBR-3	LASALLE	137	78
		CONTRACT NO. 66C59		
		ILLINOIS FED. AID PROJECT		

Notes:
Pour steps monolithically with cap.
Space reinforcement in cap to miss anchor bolts.

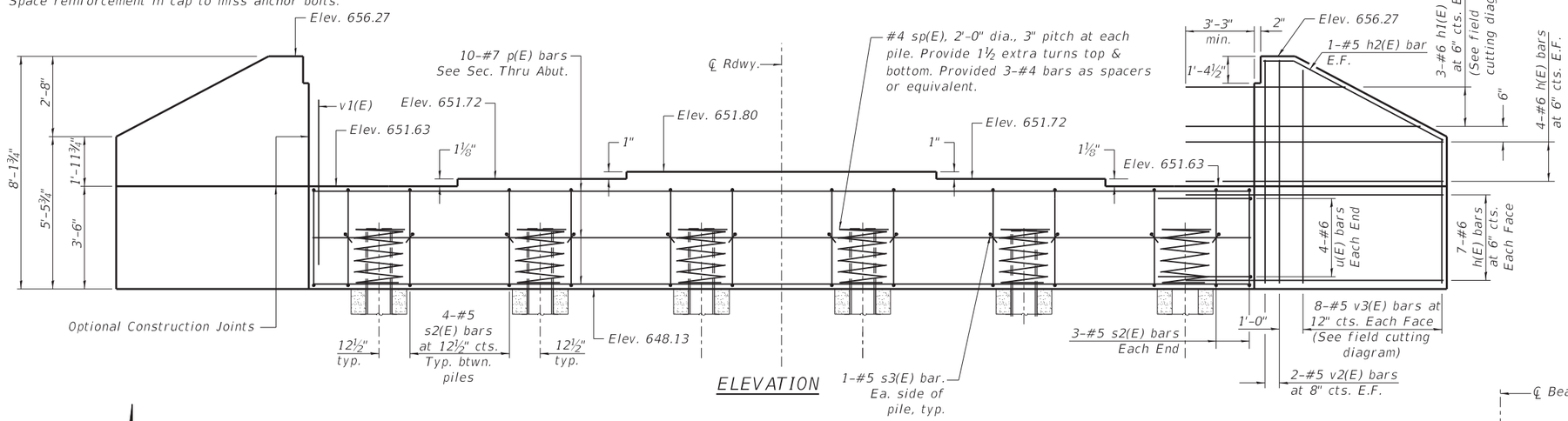

ELEVATION

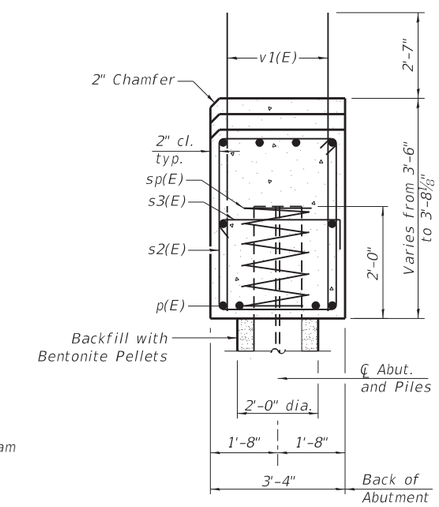

SEC. THRU ABUT.

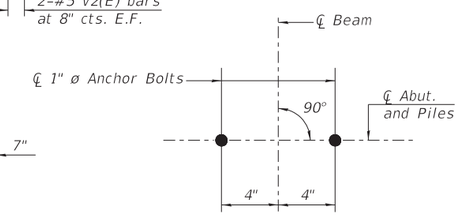

DETAIL A

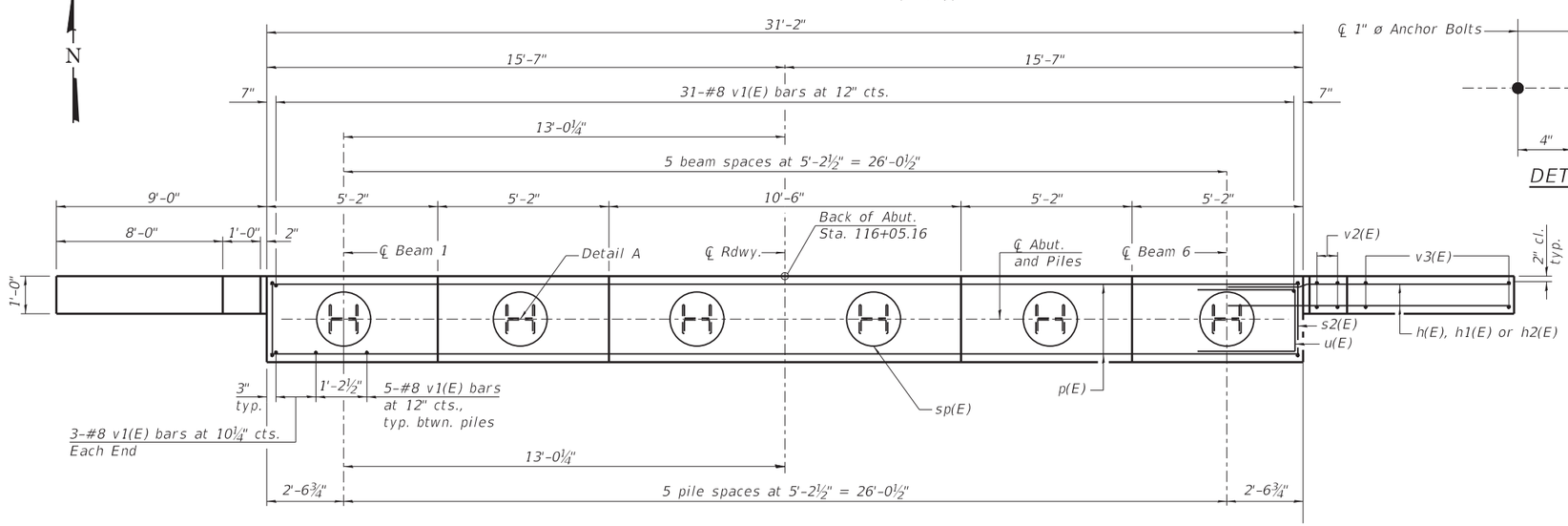

PLAN

BILL OF MATERIAL

Bar	No.	Size	Length	Shape
h(E)	44	#6	12'-1"	
h1(E)	6	#6	19'-4"	
h2(E)	4	#5	9'-1"	
p(E)	10	#7	30'-10"	
s2(E)	26	#5	13'-3"	
s3(E)	12	#5	4'-0"	
* sp(E)	6	#4	2'-0"	
u(E)	8	#6	10'-6"	
v1(E)	62	#8	5'-11"	
v2(E)	8	#5	7'-9"	
v3(E)	16	#5	12'-8"	
Structure Excavation			Cu. Yd.	113
Concrete Structures			Cu. Yd.	18.5
Reinforcement Bars, Epoxy Coated			Pound	3,710
Furnishing Steel Piles, HP12x74			Foot	408
Driving Piles			Foot	408

For details of piles see sheet 21 of 24.
*Length is height of spiral

PILE DATA

Type: Steel HP12x74
Nominal Required Bearing: 589 kips
Factored Resistance Available: 324 kips
Est. Length: 68 ft.
No. Production Piles: 6
No. Test Piles: 0

Piles shall be driven through 24" diameter precored holes extending to Elevation 638.13 according to Article 512.09(c) of the Standard Specifications except as noted. Void space outside pile shall be backfilled with bentonite pellets per manufacturer's specifications. Cost included in Driving Piles.

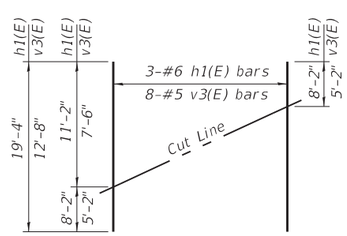

FIELD CUTTING DIAGRAM

Order h1(E) and v3(E) full length. Cut as shown and use remainder of bars in opposite face.

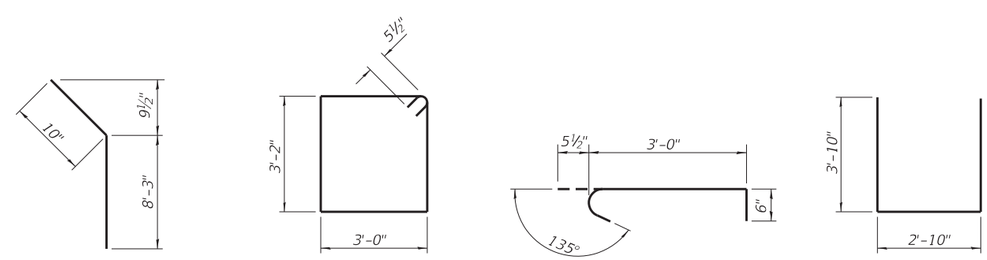

BAR h2(E) BAR s2(E) BAR s3(E) BAR u(E)

Notes:
Space reinforcement in cap to miss anchor bolts.
Pour steps monolithically with cap.

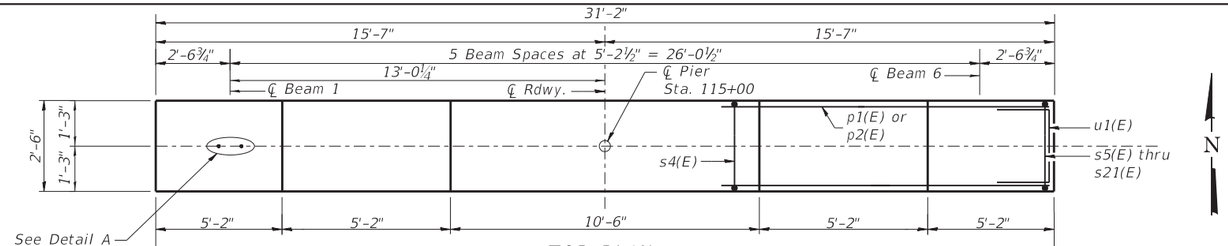

TOP PLAN

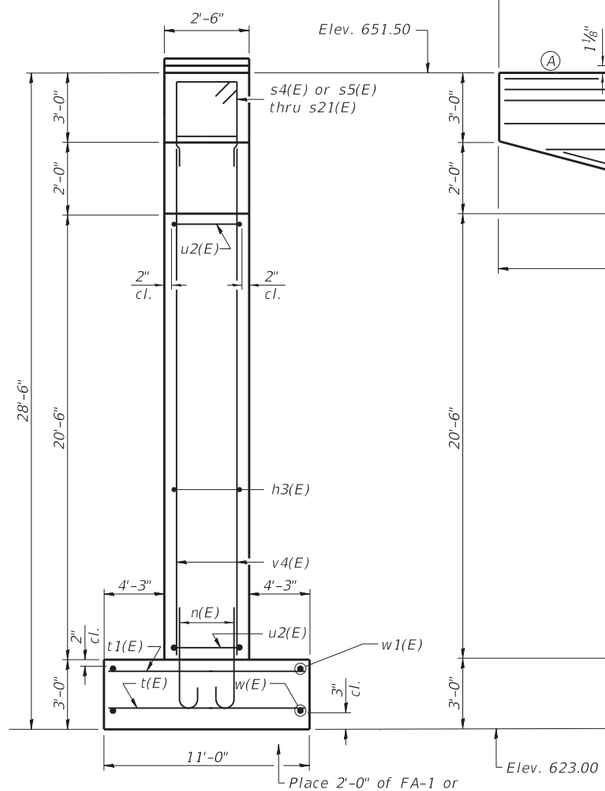

END VIEW

Max. applied service bearing pressure = Qmax = 9.7 ksf

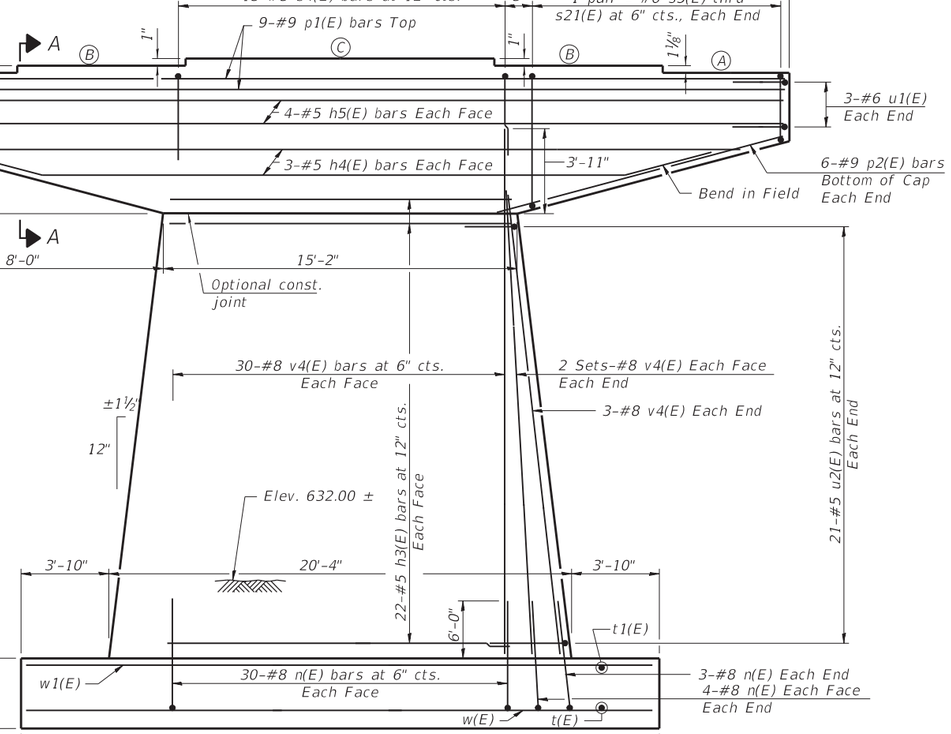

ELEVATION
(Looking North)

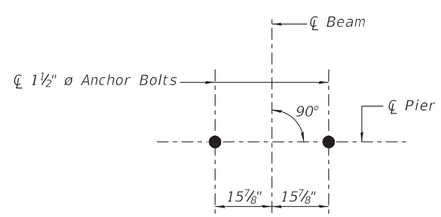

DETAIL A

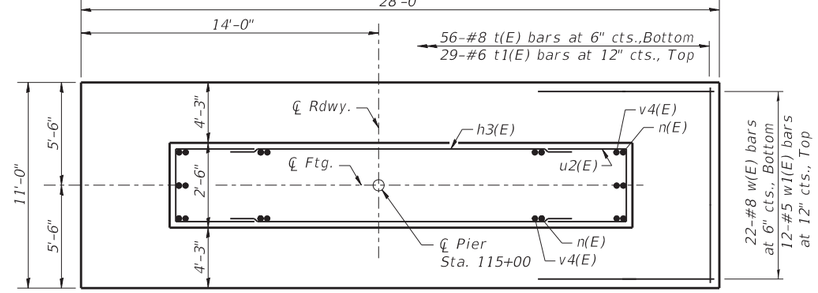

FOOTING PLAN

BEARING SEAT ELEV.

	Elev.
A	651.50
B	651.59
C	651.67

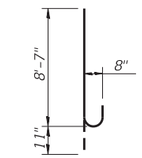

BAR n(E)

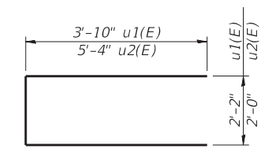

BAR u1(E) & u2(E)

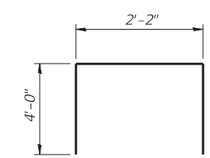

BAR s4(E)

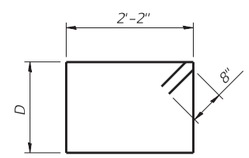

BARS s5(E) THRU s21(E)

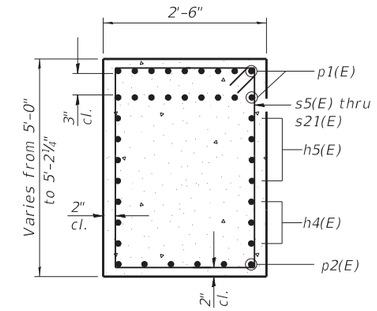

SECTION A-A

BILL OF MATERIAL

Bar	No.	Size	Length	Shape
h3(E)	44	#5	14'-10"	
h4(E)	6	#5	28'-5"	
h5(E)	8	#5	30'-10"	
n(E)	82	#8	9'-6"	
p1(E)	18	#9	30'-10"	
p2(E)	12	#9	8'-1"	
s4(E)	15	#5	10'-2"	
s5(E)	4	#6	11'-0"	
s6(E)	4	#6	11'-4"	
s7(E)	4	#6	11'-6"	
s8(E)	4	#6	11'-8"	
s9(E)	4	#6	12'-0"	
s10(E)	4	#6	12'-2"	
s11(E)	4	#6	12'-6"	
s12(E)	4	#6	12'-10"	
s13(E)	4	#6	13'-0"	
s14(E)	4	#6	13'-4"	
s15(E)	4	#6	13'-6"	
s16(E)	4	#6	13'-8"	
s17(E)	4	#6	14'-0"	
s18(E)	4	#6	14'-4"	
s19(E)	4	#6	14'-6"	
s20(E)	4	#6	14'-10"	
s21(E)	4	#6	15'-0"	
t(E)	56	#8	10'-8"	
t1(E)	29	#6	10'-8"	
u1(E)	6	#6	9'-10"	
u2(E)	42	#5	12'-8"	
v4(E)	82	#8	24'-3"	
w(E)	22	#8	27'-8"	
w1(E)	12	#5	27'-8"	
Structure Excavation		Cu. Yd.	160	
Concrete Structures		Cu. Yd.	81.1	
Reinforcement Bars, Epoxy Coated		Pound	16,890	

MIN. BAR LAP

#5 bar = 2'-11"

D DIMENSION

Bar	D
s5(E)	2'-8"
s6(E)	2'-10"
s7(E)	2'-11"
s8(E)	3'-0"
s9(E)	3'-2"
s10(E)	3'-3"
s11(E)	3'-5"
s12(E)	3'-7"
s13(E)	3'-8"
s14(E)	3'-10"
s15(E)	3'-11"
s16(E)	4'-0"
s17(E)	4'-2"
s18(E)	4'-4"
s19(E)	4'-5"
s20(E)	4'-7"
s21(E)	4'-8"

MODEL: Default
FILE NAME: P:\Effingham\2685-01 - CH 9 at I-80 -SGR - IDOT D3\Work Order #6\CAD\Sheets\RevisedSXX_R2685-01-Pier.dgn

CDI
CIVIL DESIGN, INC.
WBE / DBE
EFFINGHAM, IL
LICENSE #184.003222

USER NAME = wkistler	DESIGNED - KM	REVISED -
	CHECKED - TJZ	REVISED -
PLOT SCALE = 40.0000 ' / in.	DRAWN - DMM	REVISED -
PLOT DATE = 8/15/2019	CHECKED - ADB	REVISED -

STATE OF ILLINOIS
DEPARTMENT OF TRANSPORTATION

PIER
STRUCTURE NO. 050-0261

SHEET 20 OF 24 SHEETS

F.A.I RTE.	SECTION	COUNTY	TOTAL SHEETS	SHEET NO.
80	(50-3) HBR-3	LASALLE	137	80
		CONTRACT NO. 66C59		
		ILLINOIS	FED. AID PROJECT	

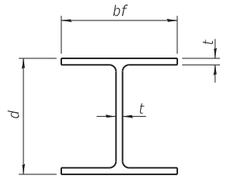

STEEL PILE TABLE

Designation	Depth d	Flange width bf	Web and Flange thickness t	Encasement diameter A
HP 14x117	14¼"	14⅞"	13/16"	30"
x102	14"	14¾"	11/16"	30"
x89	13⅞"	14¾"	⅝"	30"
x73	13⅝"	14⅝"	½"	30"
HP 12x84	12¼"	12¼"	11/16"	24"
x74	12⅛"	12¼"	⅝"	24"
x63	12"	12⅛"	½"	24"
x53	11¾"	12"	7/16"	24"
HP 10x57	10"	10¼"	9/16"	24"
x42	9¾"	10⅛"	7/16"	24"
HP 8x36	8"	8⅛"	7/16"	18"

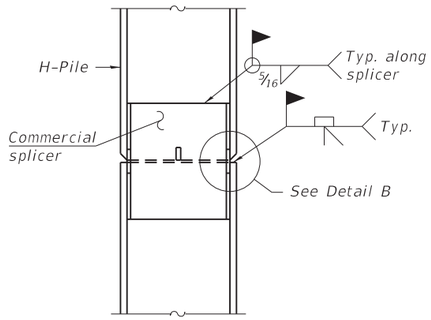

ELEVATION

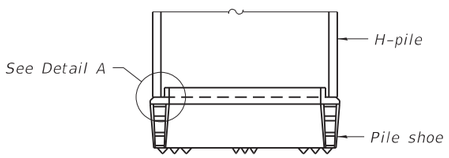

ELEVATION

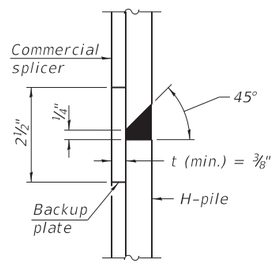

DETAIL "B"

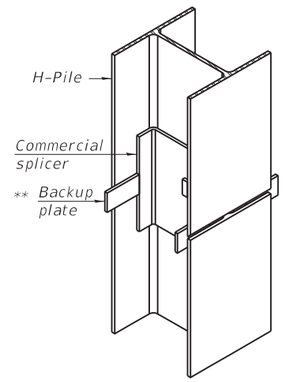

ISOMETRIC VIEW

WELDED COMMERCIAL SPLICE

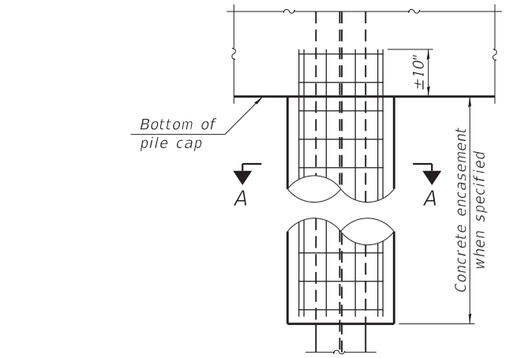

ELEVATION

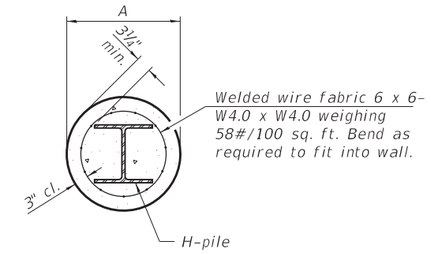

SECTION A-A

INDIVIDUAL PILE CONCRETE ENCASEMENT

(Forms for encasement may be omitted when soil conditions permit).

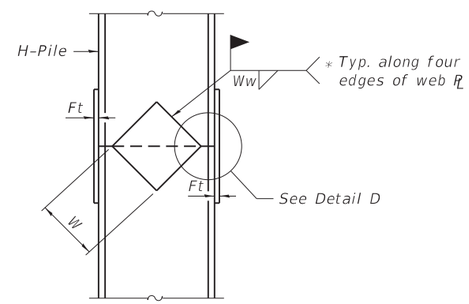

ELEVATION

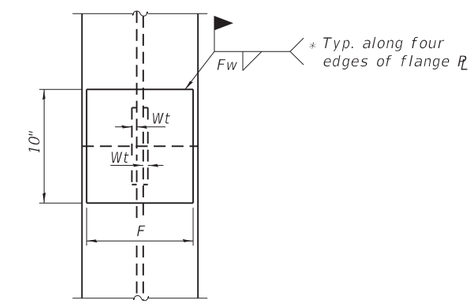

END VIEW

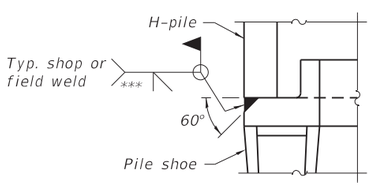

DETAIL A

SHOE ATTACHMENT

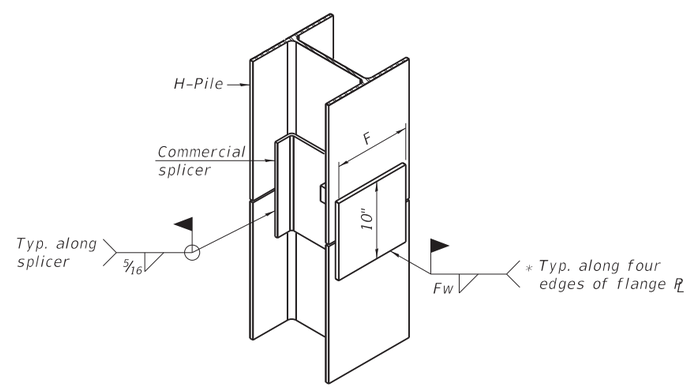

ISOMETRIC VIEW

WELDED COMMERCIAL SPLICE ALTERNATE

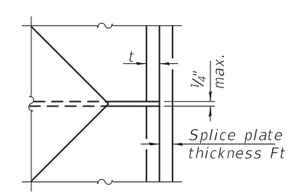

DETAIL D

Designation	F	Ft	Fw	W	Wt	Ww
HP 14x117	12½"	1"	⅞"	7¾"	⅝"	½"
x102	12½"	⅞"	¾"	7¾"	⅝"	½"
x89	12½"	¾"	11/16"	7¾"	⅝"	½"
x73	12½"	⅝"	9/16"	7¾"	⅝"	½"
HP 12x84	10"	⅞"	11/16"	6½"	⅝"	½"
x74	10"	⅞"	11/16"	6½"	⅝"	½"
x63	10"	⅝"	½"	6½"	½"	⅜"
x53	10"	⅝"	½"	6½"	½"	⅜"
HP 10x57	8"	¾"	9/16"	5¼"	½"	⅜"
x42	8"	⅝"	9/16"	5¼"	½"	⅜"
HP 8x36	7"	⅝"	7/16"	4¼"	½"	⅜"

WELDED PLATE FIELD SPLICE

Note:
The steel H-piles shall be according to AASHTO M270 Grade 50.

* Interrupt welds ¼" from end of web and/or each flange.

** Remove portions of backup plates that extend outside the flanges.

*** Weld size per pile shoe manufacturer (5/16" min.).

F-HP 8-11-2017

MODEL: Default
FILE NAME: 0500261-66C59-017-BEARING-DET.dgn

CHAMLIN & ASSOCIATES, INC.

USER NAME =	DESIGNED - --	REVISED -	
	CHECKED - --	REVISED -	
PLOT SCALE =	DRAWN - NV	REVISED -	
PLOT DATE =	CHECKED - JKC	REVISED -	

STATE OF ILLINOIS
DEPARTMENT OF TRANSPORTATION

HP PILE DETAILS
STRUCTURE NO. 050-0261

SHEET 21 OF 24 SHEETS

F.A.I. RTE.	SECTION	COUNTY	TOTAL SHEETS	SHEET NO.
80	(50-3) HBR-3	LASALLE	137	81
		CONTRACT NO. 66C59		
		ILLINOIS FED. AID PROJECT		

10/16/2019 8:30:28 AM

Illinois Department of Transportation
Division of Highways
IDOT

SOIL BORING LOG

Date 6/3/11

ROUTE I-80 (FAI 80) DESCRIPTION FAS 174 (CH 9) over I-80, 4 miles East of IL 178 LOGGED BY Larry Myers

SECTION 50-3HB-1 LOCATION SW 1/4, SEC. 31, TWP. 34N, RNG. 3E, 3rd PM,
Latitude , Longitude

COUNTY LaSalle DRILLING METHOD Hollow Stem Auger HAMMER TYPE CME Automatic

STRUCT. NO. 050-0081 (Exist.)
Station 210+80.6

BORING NO. 01 (S. Abut.)
Station 210+88.6
Offset 142.0 ft Rt.
Ground Surface Elev. 653.58 ft

Surface Water Elev. ft
Stream Bed Elev. ft

Groundwater Elev.:
First Encounter ft
Upon Completion 628.6 ft
After Hrs. ft

Description	Elev.	DEPTH (ft)	BLOWS (/6")	UCS Qu (tsf)	MOIST (%)
Augered Bituminous Pavement, Brown Sand & Gravel Fill	651.08				
Hard Brown & Gray Silty Clay Loam Till Fill	649.08		6		
			7 8	>4.5 P	11
Very Stiff Black & Gray Silty Clay/Silty Clay Loam Fill		-5	4		
			3 5	3.1 B	26
			4		
			5 7	3.6 B	25
		-10	3		
			5 6	3.4 B	27
			4		
			6 7	3.4 B	26
		-15	3		
			6 7	3.6 B	25
			4		
			7 8	3.8 B	20
		-20			
Very Stiff Black & Gray Silty Clay/Silty Clay Loam Fill *(continued)*			3		
			6 7	3.6 B	25
			11		
	629.58		8 9	4.0 B	18
Very Stiff Black Silty Clay Loam Topsoil		▽ -25	5		
			6 7	3.4 B	26
Stiff Brown & Gray Silty Clay & Silt Layers	627.08		3		
			3 4	2.0 P	27
	623.58	-30	5		
Hard Gray Silty Clay Loam Till			7 12	5.4 S	16
			6		
			12 14	5.7 S	15
		-35	5		
			8 9	5.4 S	15
	616.58				
Very Stiff Gray Silty Clay Loam/Silty Clay Till with Layers of Fine Sand @ 55'			3		
			6 7	3.7 B	16
		-40			

The Unconfined Compressive Strength (UCS) Failure Mode is indicated by (B-Bulge, S-Shear, P-Penetrometer)
The SPT (N value) is the sum of the last two blow values in each sampling zone (AASHTO T206)

BBS, form 137 (Rev. 8-99)

142' Rt. Sta 210+88.6 = 6.18' Lt Sta 113+58.04

Illinois Department of Transportation
Division of Highways
IDOT

SOIL BORING LOG

Date 6/3/11

ROUTE I-80 (FAI 80) DESCRIPTION FAS 174 (CH 9) over I-80, 4 miles East of IL 178 LOGGED BY Larry Myers

SECTION 50-3HB-1 LOCATION SW 1/4, SEC. 31, TWP. 34N, RNG. 3E, 3rd PM,
Latitude , Longitude

COUNTY LaSalle DRILLING METHOD Hollow Stem Auger HAMMER TYPE CME Automatic

STRUCT. NO. 050-0081 (Exist.)
Station 210+80.6

BORING NO. 01 (S. Abut.)
Station 210+88.6
Offset 142.0 ft Rt.
Ground Surface Elev. 653.58 ft

Surface Water Elev. ft
Stream Bed Elev. ft

Groundwater Elev.:
First Encounter ft
Upon Completion 628.6 ft
After Hrs. ft

Description	Elev.	DEPTH (ft)	BLOWS (/6")	UCS Qu (tsf)	MOIST (%)
Very Stiff Gray Silty Clay Loam/Silty Clay Till with Layers of Fine Sand @ 55' *(continued)*			4		
			7 8	4.0 S	19
			3		
			5 7	3.7 B	19
		-45	4		
			4 8	3.7 B	18
			4		
			5 7	3.7 B	23
		-50	4		
			5 7	3.7 B	21
			5		
			4 7	3.7 B	18
		-55	9		
			10 12	4.0 B	23
	596.58				
Hard Gray Silty Loam Till with Fine Sand Layers - Till is Brittle			21		
			27 36	>4.5 P	9
	594.08				
		-60			
Hard Reddish Gray Silty Loam/ Silty Clay Loam Till			47		
			100/5"	12.1 S*	8
* Max Rimac @ 0% *(continued)*					
	591.08				
Assumed Rock Surface with Auger Refusal @ 62.5' End of Boring			100/0"		
		-65			
		-70			
		-75			
		-80			

The Unconfined Compressive Strength (UCS) Failure Mode is indicated by (B-Bulge, S-Shear, P-Penetrometer)
The SPT (N value) is the sum of the last two blow values in each sampling zone (AASHTO T206)

BBS, form 137 (Rev. 8-99)

142' Rt. Sta 210+88.6 = 6.18' Lt Sta 113+58.04

Illinois Department of Transportation
Division of Highways
IDOT

SOIL BORING LOG

Date 6/7/11

ROUTE I-80 (FAI 80) DESCRIPTION FAS 174 (CH 9) over I-80, 4 miles East of IL 178 LOGGED BY Larry Myers

SECTION 50-3HB-1 LOCATION SE 1/4, SEC. 36, TWP. 34N, RNG. 2E, 3rd PM,
Latitude , Longitude

COUNTY LaSalle DRILLING METHOD Hollow Stem Auger HAMMER TYPE CME Automatic

STRUCT. NO. 050-0081 (Exist.)
Station 210+80.6

BORING NO. 02 (N. Abut.)
Station 210+75.1
Offset 142.0 ft Lt.
Ground Surface Elev. 654.02 ft

Surface Water Elev. ft
Stream Bed Elev. ft

Groundwater Elev.:
First Encounter ft
Upon Completion 628.0 ft
After Hrs. ft

Description	Elev.	DEPTH (ft)	BLOWS (/6")	UCS Qu (tsf)	MOIST (%)
Augered Bituminous Pavement, Brown Sand & Gravel Fill	651.52				
Hard Gray & Black Silty Clay Loam Topsoil & Till Fill	649.02	-5	7 7 8	4.9 S	16
Medium Gray Loamy Sand & Gravel Fill	647.02		10 10		8
Very Stiff to Hard Brown, Black & Gray Silty Clay & Silty Clay Loam Till Fill		-10	4 5 6	3.7 B	25
		-15	4 3 7	4.1 B	21
		-20	3 6 8	4.6 S	14
			3 4 5	3.4 B	24
			4 5 6	4.1 B	16
Very Stiff to Hard Brown, Black & Gray Silty Clay & Silty Clay Loam Till Fill *(continued)*	631.52		4 5 6	4.4 S	15
Hard Black Silty Clay Loam Topsoil	629.52		8 8 9	5.4 S	14
Very Stiff Gray & Brown Silty Clay Loess	629.02	-25	3		
Medium Gray & Brown Fine Sand to Coarse Gravel - Loamy with Free Water			4 5	3.1 B	25
		-30	10 10 5		23
		-35	9 12 7		13
		-40	5 10 10	4.1 B	16
			10 12 5	7.8 S	13
			7 10 7	6.4 S	14
Hard Gray Silty Clay Loam Till with Silt Layers @ 48' - 53'	622.02				

The Unconfined Compressive Strength (UCS) Failure Mode is indicated by (B-Bulge, S-Shear, P-Penetrometer)
The SPT (N value) is the sum of the last two blow values in each sampling zone (AASHTO T206)

BBS, form 137 (Rev. 8-99)

142' Rt. Sta 210+75.1 = 21.33' Lt Sta 116+41.96

Illinois Department of Transportation
Division of Highways
IDOT

SOIL BORING LOG

Date 6/7/11

ROUTE I-80 (FAI 80) DESCRIPTION FAS 174 (CH 9) over I-80, 4 miles East of IL 178 LOGGED BY Larry Myers

SECTION 50-3HB-1 LOCATION SE 1/4, SEC. 36, TWP. 34N, RNG. 2E, 3rd PM,
Latitude , Longitude

COUNTY LaSalle DRILLING METHOD Hollow Stem Auger HAMMER TYPE CME Automatic

STRUCT. NO. 050-0081 (Exist.)
Station 210+80.6

BORING NO. 02 (N. Abut.)
Station 210+75.1
Offset 142.0 ft Lt.
Ground Surface Elev. 654.02 ft

Surface Water Elev. ft
Stream Bed Elev. ft

Groundwater Elev.:
First Encounter ft
Upon Completion 628.0 ft
After Hrs. ft

Description	Elev.	DEPTH (ft)	BLOWS (/6")	UCS Qu (tsf)	MOIST (%)
Hard Gray Silty Clay Loam Till with Silt Layers @ 48' - 53' *(continued)*			7 11 15	7.0 S	15
		-45	7 9 15	7.2 S	17
		-50	10 18 22	7.8 S	16
		-55	10 12 12	7.4 S	19
		-60	6 10 12	6.8 S	14
			8 10 14	7.0 S	23
			9 12 17	7.0 S	24
	594.52				
Hard Reddish Gray Silty Clay Loam Till			17 21 33	11.5 S*	11
* Max Rimac @ 5% *(continued)*	591.52	-65	100/0"		
Assumed Rock Surface with Auger Refusal @ 62.5' End of Boring		-70 -75 -80			

The Unconfined Compressive Strength (UCS) Failure Mode is indicated by (B-Bulge, S-Shear, P-Penetrometer)
The SPT (N value) is the sum of the last two blow values in each sampling zone (AASHTO T206)

BBS, form 137 (Rev. 8-99)

142' Rt. Sta 210+75.1 = 21.33' Lt Sta 116+41.96

Illinois Department of Transportation
Division of Highways
IDOT

SOIL BORING LOG

Date 6/7/16

ROUTE I-80 (FAI 80) DESCRIPTION FAS 174 (CH 9) over I-80, 4 miles East of IL 178 LOGGED BY Larry Myers

SECTION 50-3HB-1 LOCATION SW 1/4, SEC. 31, TWP. 34N, RNG. 3E, 3rd PM, Latitude 41.368118, Longitude -88.933246

COUNTY LaSalle DRILLING METHOD Hollow Stem Auger HAMMER TYPE CME Automatic

STRUCT. NO. 050-0081 (Exist.)
Station 210+80.6

BORING NO. 03 (Pier)
Station 211+04.6
Offset 13.0 ft Rt.
Ground Surface Elev. 633.92 ft

Surface Water Elev. ____ ft
Stream Bed Elev. ____ ft

Groundwater Elev.:
First Encounter 627.4 ft ▼
Upon Completion 627.9 ft ▽
After ____ Hrs. ____ ft

Description	Elev.	DEPTH (ft)	BLOWS (/6")	UCS Qu (tsf)	MOIST (%)
Augered Shoulder Stone, Black Silty Clay Loam Fill, Brown Silty Clay					
	631.42				
Very Stiff Brown Silty Clay			3		
			3	2.5	26
			4	P	
	629.42				
Stiff Brown Silty Loam / Loam		-5			
			1		
			2	1.0	18
	627.42 ▼		3	P	
Medium Brown Fine Sand to Coarse Gravel with Free Water					
			5		
			7		12
			7		
	623.92	-10			
Very Stiff to Hard Gray Silty Clay Loam Till with Numerous Layers of Gray Silt			3		
			4	3.5	17
			6	P	
			4		
			6	4.3	16
			8	S	
		-15			
			5		
			6	5.7	15
			10	S	
			2		
			5	4.8	17
			7	S	
		-20			

Description	Elev.	DEPTH (ft)	BLOWS (/6")	UCS Qu (tsf)	MOIST (%)
Very Stiff to Hard Gray Silty Clay Loam Till with Numerous Layers of Gray Silt *(continued)*			5		
			7	4.9	18
			8	S	
			4		
			5	4.7	19
			10	S	
		-25			
			6		
			5	4.3	19
			6	B	
			5		
			7	5.6	18
			11	S	
		-30			
			7		
			9	6.4	18
			12	S	
			7		
			9	6.6	22
			13	S	
		-35			
			4		
			7	5.7	21
			12	S	
			4		
			8	5.4	21
			10	S	
	594.42				
		-40			

The Unconfined Compressive Strength (UCS) Failure Mode is indicated by (B-Bulge, S-Shear, P-Penetrometer)
The SPT (N value) is the sum of the last two blow values in each sampling zone (AASHTO T206)

BBS, form 137 (Rev. 8-99)

13' Rt. Sta 211+04.6 = 9.07' Rt. Sta 114+87.14

SOIL BORING 050-0081.GPJ IL_DOT.GDT 6/15/16

Illinois Department of Transportation
Division of Highways
IDOT

SOIL BORING LOG

Date 6/7/16

ROUTE I-80 (FAI 80) DESCRIPTION FAS 174 (CH 9) over I-80, 4 miles East of IL 178 LOGGED BY Larry Myers

SECTION 50-3HB-1 LOCATION SW 1/4, SEC. 31, TWP. 34N, RNG. 3E, 3rd PM, Latitude 41.368118, Longitude -88.933246

COUNTY LaSalle DRILLING METHOD Hollow Stem Auger HAMMER TYPE CME Automatic

STRUCT. NO. 050-0081 (Exist.)
Station 210+80.6

BORING NO. 03 (Pier)
Station 211+04.6
Offset 13.0 ft Rt.
Ground Surface Elev. 633.92 ft

Surface Water Elev. ____ ft
Stream Bed Elev. ____ ft

Groundwater Elev.:
First Encounter 627.4 ft ▼
Upon Completion 627.9 ft ▽
After ____ Hrs. ____ ft

Description	Elev.	DEPTH (ft)	BLOWS (/6")	UCS Qu (tsf)	MOIST (%)
Medium Gray Fine Sand to Coarse Gravel *(continued)*			7		
			12		11
			15		
			8		
			10		17
			12		
	589.92				
Hard Reddish Brown Silty Clay Loam Till		-45			
			27		
* Max Rimac @ 5%			36	11.5	9
			41	S*	
			25		
			35	11.5	11
			45	S*	
	583.92	-50			
Light Gray Shale	583.75		100/2"		10
End of Boring					
		-55			
		-60			

The Unconfined Compressive Strength (UCS) Failure Mode is indicated by (B-Bulge, S-Shear, P-Penetrometer)
The SPT (N value) is the sum of the last two blow values in each sampling zone (AASHTO T206)

BBS, form 137 (Rev. 8-99)

13' Rt. Sta 211+04.6 = 9.07' Rt. Sta 114+87.14

SOIL BORING 050-0081.GPJ IL_DOT.GDT 6/15/16

B.M.: Top of N.E. bolt
100' Rt. Sta. 209+00
Elev. 632.25

FOR INFORMATION ONLY

STATE OF ILLINOIS
DEPARTMENT OF PUBLIC WORKS & BUILDINGS
DIVISION OF HIGHWAYS

ROUTE NO.	SECTION	COUNTY	TOTAL SHEETS	SHEET NO.
F.A.I. 80	*	LA SALLE	B-61 F-21	22 9
FED. ROAD DIST. NO. 7	ILLINOIS	FED. AID PROJECT.		

SHEET NO. 1
11 SHEETS

* 50-3HB, HF, 3HB-1, HF-1, 3HB-2, HF-2, 3HB-3, HF-3

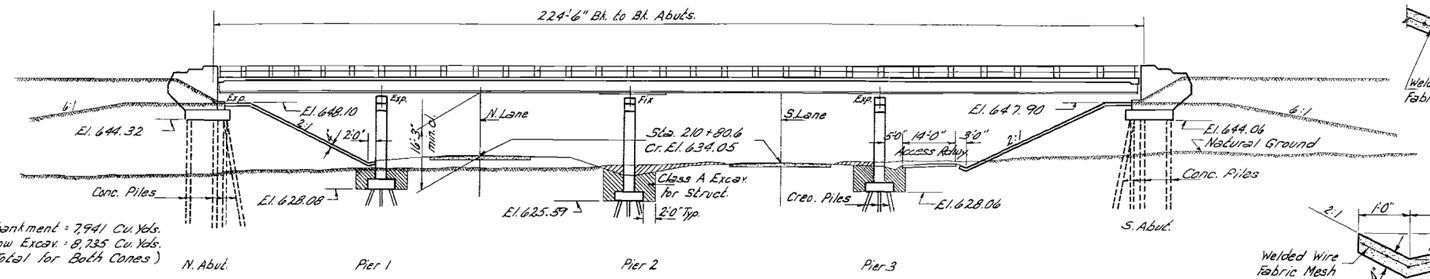

Embankment = 7,941 Cu. Yds.
Borrow Excav. = 8,735 Cu. Yds.
(Total for Both Cones)

ELEVATION

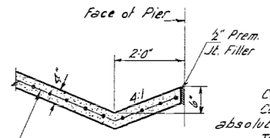

SEC. B-B

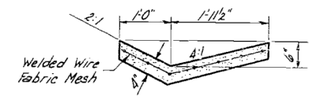

SEC. C-C
(By others)

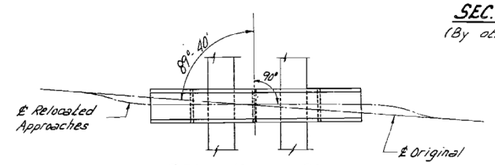

RELOCATION SKETCH

GENERAL NOTES

Class X Concrete shall be used throughout.

Coarse aggregate which is to be used in end posts must be absolutely free of chert, flint, limonite, lignite and soft sandstone.

The concrete floor slab shall be finished in accordance with Article 51.19 of the Standard Specifications.

Slope wall shall be reinforced with welded wire fabric 6"x6" mesh, #4 wires, weighing 58# per 100 sq. ft.

Rivets ¾", open holes 15/16", unless noted.

All Structural Steel shall conform to A.S.T.M. A-7 Specifications for Structural Steel.

Anchor bolts shall be set before riveting diaphragms over supports.

All bolsters, rockers, bearing plates, shim plates, lead plates, pintles and anchor bolts shall be fabricated and set in accordance with Article 51.15 of the Standard Specifications and are included in quantity of Structural Steel.

Except as otherwise provide all Structural Steel shall receive one shop coat of red lead paint and two field coats of aluminum paint. See Articles 56.1 to 56.5 inclusive of the Standard Specifications.

All paint shall be furnished and applied by the Contractor.

Concrete piles through embankment shall be driven in precorded holes in accordance with Article 60.91(c) of the Standard Specifications.

The contractor shall drive one concrete test pile at North Abut. in permanent location and one timber test pile in the vicinity of Pier 2 as directed by the Engineer before ordering remainder of piles.

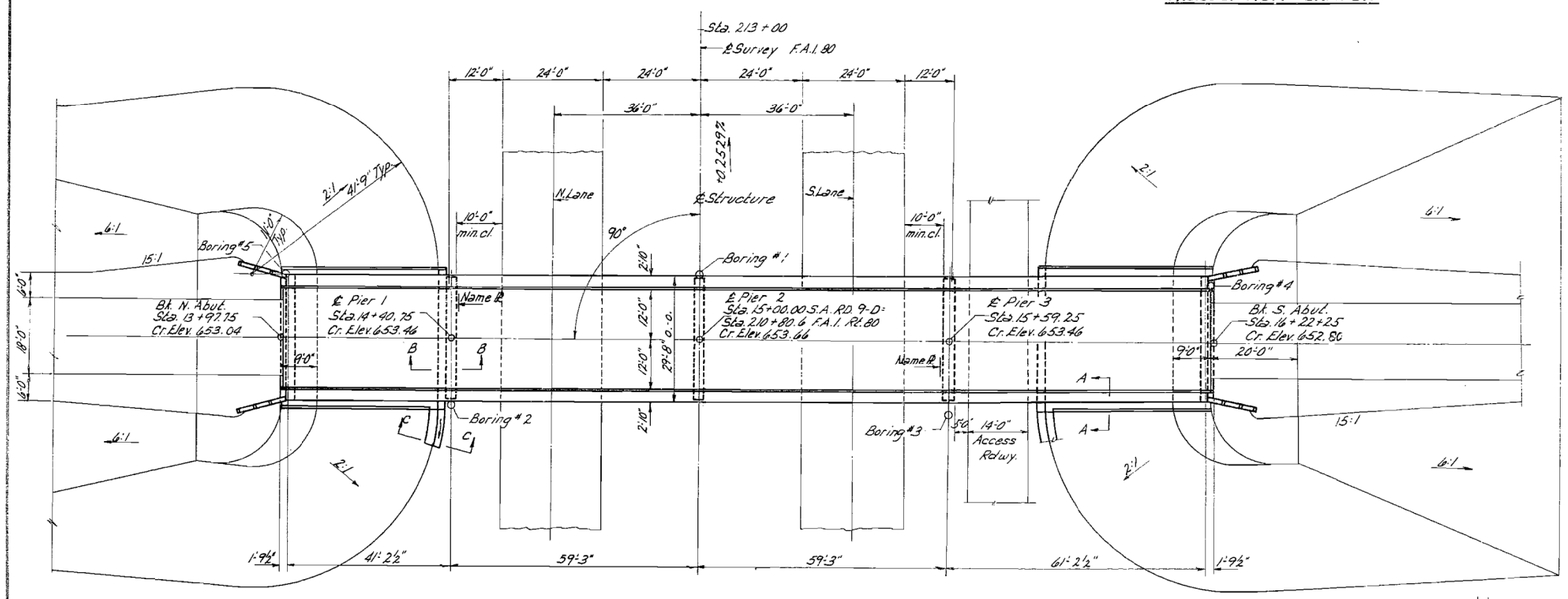

PLAN

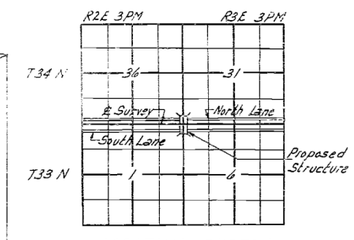

LOCATION SKETCH

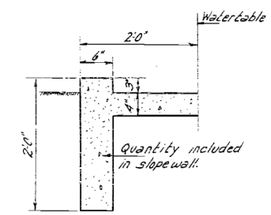

SECTION A-A

TOTAL BILL OF MATERIAL - SEC. 50-3HB-1

Item		Super	Sub	Total
Earth Excavation	Cu. Yds.			8,735
Class A Excavation for Struct.	Cu. Yds.		150	150
Class X Concrete	Cu. Yds.	186.1	200.2	386.3
Erecting Structural Steel	Lbs.	145,240		145,240
Furnishing & Erecting Metal Handrail	Lin. Ft.	444		444
Reinforcement Bars	Lbs.	34,430	13,890	48,320
Creosoted Piles (up to 20')	Lin. Ft.		940	940
Test Piles (Timber)	Ea.		1	1
Concrete Piles	Lin. Ft.		595	595
Test Piles (Concrete)	Ea.		1	1
Name Plates	Ea.		2	2
Slope Wall	Sq. Yds.		370	370

BILL OF MATERIAL - SEC. 50-3HF-1

Furnish Structural Steel	Lbs.	145,240		145,240

DESIGNED	T. M. Yang
CHECKED	W. Hsiung
DRAWN	T. M. Yang, P. Lawler
CHECKED	W. Hsiung

MAY 24 1961

EXAMINED — W. E. Baumann, ENGINEER OF BRIDGE AND TRAFFIC STRUCTURES

PASSED — ENGINEER OF DESIGN

APPROVED — CHIEF HIGHWAY ENGINEER

DESIGN STRESSES

fc = 1,400 p.s.i. Super & Sub.
fs = 20,000 p.s.i. Reinf.
fs = 18,000 p.s.i. Structural Steel
v = 75 p.s.i. Footings
n = 10

LOADING H15-S12-44

STA. 210+80.6
BUILT 196 BY
STATE OF ILLINOIS
F.A.I. RT. 80 SEC. 50-3HB-1
F.A. PROJ. I-80-3(12)
LOADING H15-S12

NAME PLATE

See Std. 2113

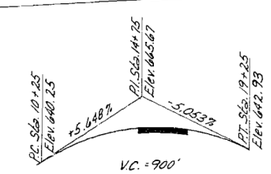

GRADE PROFILE - S.A. RD. 9-D

GENERAL PLAN & ELEVATION
PROJ. I-80-3( )
S.A. RD. 9-D OVER
F.A.I. RT. 80 SEC. 50-3HB-F-1
LaSALLE COUNTY
STA. 210+80.6

Revised 7-24-61 Bk. Sa. Abut. Elev.

FILE NAME =	USER NAME = calderonl	DESIGNED -	REVISED -
c:\pw_work\pwidot\calderonl\d0318968\D366c59-sht-exist-bridge-plans.dgn		DRAWN -	REVISED -
	PLOT SCALE = 100.0000 ' / in.	CHECKED -	REVISED -
	PLOT DATE = 10/9/2019	DATE -	REVISED -

STATE OF ILLINOIS
DEPARTMENT OF TRANSPORTATION

ORIGINAL CONSTRUCTION FOR INFORMATION ONLY

SCALE: SHEET OF SHEETS STA. TO STA.

F.A.I. RTE.	SECTION	COUNTY	TOTAL SHEETS	SHEET NO.
80	(50-3)HBR-3	LASALLE	137	85
		CONTRACT NO. 66C59		
		ILLINOIS FED. AID PROJECT		

FOR INFORMATION ONLY

STATE OF ILLINOIS
DEPARTMENT OF PUBLIC WORKS & BUILDINGS
DIVISION OF HIGHWAYS

80 * LA SALLE B-61 23 — SHEET NO. 2 OF 11 SHEETS

* 50-3HB, 50-3HB-1, 50-3HB-2, 50-3HB-3

FORM NO. B.D. 137 REV. 9-60 — Sn. 1 of 1 Sn.

BRIDGE FOUNDATION BORING LOG

PROJECT I-80-3 — BRIDGE County Highway 9-D — Date February 27, 1961
ROUTE FAI 80 — over FAI 80 (Sta 210+80.6) — Bored By Gehler
SEC. 50-3HB-1 — STA. 15+00 — Checked By Bieritz
COUNTY La Salle
Pier #2 — Boring No. 1 — Station 14+00 — Offset 13' Lt. ℄
Surface Water El. None
Groundwater El. at Completion 624.97
After 24 Hours 625.47

Elevation	Z	q u tsf	w (%)
Ground Surface 632.97	0		
Very Stiff Brownish Black SILTY CLAY 629.47			
	15	2.9 S	25
Stiff Yellowish Brown SILTY CLAY 627.97	-5		
Loose Yellowish Brown SANDY LOAM 626.97	7	1.7 S	26
Medium Yellowish Brown Coarse Rounded SAND to Coarse Rounded GRAVEL 624.47	14		
Hard Brown CLAY (Till) 621.97	-10		
	14	4.3 B	17
Hard Gray CLAY (Till)			
	24	6.2 S	15
	-15		
	22	8.3 B	14
	21	5.4 S	17
	-20		
	18	4.3 S	19
Hard Gray CLAY (Till)			
	16	4.4 B	18
	-25		
	16	4.1 B	19
	27	5.5 B	18
602.97	-30		
	37	6.2 B	17
Dense Gray SANDY LOAM 600.97			
Very Stiff Gray CLAY (Till) 599.47			
	24	3.9 S	18
	-35		
	28	3.1 S	24
	27	4.3 B	21
Dense GRAY GRAVELY LOAM 592.97	-40		
	54	6.3 B	9
Hard Gray CLAY (Till) 591.97			
Hard Gray CLAY LOAM (Till) 589.97			
	175	9.7 +	9
	-45		

FORM NO. B.D. 137 REV. 9-60 — Sn. 1 of 1 Sn.

BRIDGE FOUNDATION BORING LOG

PROJECT I-80-3 — BRIDGE County Highway 9-D — Date February 28, 1961
ROUTE FAI 80 — over FAI 80 (Sta 210+80.6) — Bored By Gehler
SEC. 50-3HB-1 — STA. 15+00 — Checked By Bieritz
COUNTY La Salle
Pier #1 — Boring No. 2 — Station 14+40.75 — Offset 15.5' Rt ℄
Surface Water El. None
Groundwater El. at Completion 624.53
After 24 Hours 625.43

Elevation	Z	q u tsf	w (%)
Ground Surface 632.53	0		
Very Stiff Yellowish Brown and Black SILTY CLAY 629.03			
	17	3.3 S	24
Stiff Yellowish Brown SILTY CLAY 628.03	-5		
Loose Yellowish Brown SANDY LOAM 626.53	9	1.2 B	22
Medium Yellowish Brown GRAVELY LOAM 624.03	20		
Very Stiff Brown CLAY (Till) 621.53	-10		
	15	2.6 B	17
Stiff Gray CLAY (Till) 619.03			
	14	1.8 S	17
Very Stiff Gray CLAY (Till)	-15		
	13	2.7 S	16
	17	2.3 S	16
Hard Gray CLAY (Till) 614.03			
Hard Gray CLAY (Till)	-20		
	19	5.2 B	16
	18	4.3 B	15
Very Stiff Gray CLAY (Till) 609.03			
	-25		
	23	3.5 B	16
	25	3.4 B	16
	-30		
	21	3.3 B	20
Medium Gray SILT LOAM 599.03			
	30	1.7 S	17
Hard Gray CLAY 596.53	-35		
	30	4.3 S	25
Very Stiff Gray CLAY 595.53			
Medium Gray Coarse Angular SAND to Coarse Angular GRAVEL 594.53			
	33	2.9 B	23
	-40		
	-45		

FORM NO. B.D. 137 REV. 9-60 — Sn. 1 of 1 Sn.

BRIDGE FOUNDATION BORING LOG

PROJECT I-80-3 — BRIDGE County Highway 9-D — Date February 28, 1961
ROUTE FAI 80 — over FAI 80 (Sta. 210+80.6) — Bored By Gehler
SEC. 50-3 HB-1 — STA. 15+00 — Checked By Bieritz
COUNTY La Salle
Pier #3 — Boring No. 3 — Station 15+59.25 — Offset 17' Rt ℄
Surface Water El. None
Groundwater El. at Completion 625.75
After 24 Hours 626.35

Elevation	Z	q u tsf	w (%)
Ground Surface 634.15	0		
Medium Brownish Black SILTY CLAY 630.65			
	13	0.5 DE	26
Very Stiff Yellowish Brown SILTY CLAY 628.15	-5		
	13	2.8 S	24
Loose Yellowish Brown GRAVELY LOAM 625.65	8		14
Very Stiff Brown CLAY LOAM (Till) 623.15	-10		
	14	2.7 B	17
Hard Brown CLAY LOAM (Till) 620.65			
	19	4.1 B	16
Hard Gray CLAY (Till)	-15		
	27	4.3 B	15
	24	4.9 B	15
	-20		
	21	4.0 E	16
Hard Gray CLAY (Till)			
	22	6.4 B	15
	-25		
	30	Lost Sample	
	24	3.9 B	18
	-30		
	29	4.1 B	19
603.15			
Very Stiff Gray CLAY			
	26	3.5 S	25
	-35		
	23	Lost Sample	
598.15			
	-40		
	-45		

FORM NO. B.D. 137 REV. 9-60 — Sn. 1 of 1 Sn.

BRIDGE FOUNDATION BORING LOG

PROJECT I-80-3 — BRIDGE County Highway 9-D — Date March 9, 1961
ROUTE FAI 80 — over FAI 80 (Sta 210+80.6) — Bored By Bieritz
SEC. 50-3HB-1 — STA. 15+00 — Checked By Gehler
COUNTY La Salle
S. Abut. — Boring No. 4 — Station 16+02.25 — Offset 13' Lt ℄
Surface Water El. None
Groundwater El. at Completion 624.31
After 24 Hours 625.01

Elevation	Z	q u tsf	w (%)
Ground Surface 632.81	0		
Stiff Yellowish Brown and BLACK SILTY CLAY 629.31			
	18	1.0 S	22
Stiff Yellowish Brown and GRAY SILTY CLAY 627.81	-5		
Medium Yellowish Brown SANDY LOAM 625.31	10	1.7 S	25
Very Stiff Brown and Gray CLAY (Till)	-10		
	11	2.0 E	21
621.81			
Hard Gray CLAY (Till)			
	17	3.3 B	20
	21	3.0 S	17
	-15		
	28	6.18 S	17
614.31			
	23	4.95 S	17
Very Stiff Gray CLAY (Till)	-20		
	25	3.69 B	19
	24	Lost Sample	
609.31			
Medium Gray SILT 606.81	-25		
	19		20
Hard Gray Clay (TILL) 604.31			
	27	4.3 B	19
Medium Gray GRAVELY LOAM 601.81	-30		
	21		19
Very Stiff Gray CLAY 599.31			
	24	3.7 B	26
Medium Gray Coarse Angular SAND 598.31			
Very Stiff Gray CLAY 597.31	-35		
	22	2.4 S	26
	-40		

FORM NO. B.D. 137 REV. 9-60 — Sn. 1 of 1 Sn.

BRIDGE FOUNDATION BORING LOG

PROJECT I-80-3 — BRIDGE County Highway 9-D — Date March 10, 1961
ROUTE FAI 80 — over FAI 80 (Sta 210+80.6) — Bored By Gehler
SEC. 50-3HB-1 — STA. 15+00 — Checked By Bieritz
COUNTY La Salle
N. Abut. — Boring No. 5 — Station 13+97.75 — Offset 16' Lt ℄
Surface Water El. None
Groundwater El. at Completion 624.25
After 24 Hours 624.65

Elevation	Z	q u tsf	w (%)
Ground Surface 632.15	0		
Stiff Yellowish Brown and Black SILTY CLAY 628.65			
	14	1.0 E	21
Stiff Yellowish Brown and Gray SILTY CLAY 627.15	-5		
	7	1.0 E	25
Medium Yellowish Brown GRAVELY LOAM 623.65	17		
Medium Yellowish Brown SILTY CLAY 621.15	-10		
	11	1.8 B	13
Very Stiff Gray CLAY (Till)			
	20	3.9 S	19
	-15		
	23	3.9 B	15
616.15			
Hard Gray CLAY (Till) 613.65			
	24	5.4 B	13
Very Stiff Gray CLAY (Till)	-20		
	21	3.1 B	16
	23	4.1 B	15
Very Stiff Gray CLAY (Till) 609.15			
	-25		
	23	2.0 S	16
	18	1.9 S	21
	-30		
	22	2.7 B	20
Very Stiff Gray CLAY 598.15			
	25	3.1 B	22
Hard Gray CLAY 594.15	-35		
	28	4.7 B	23
	40	4.1 S	21
	-40		

N - Standard Penetration Test - Blows per foot to drive 2" O.D Split Spoon Sampler 12" with 140# hammer falling 30".

Qu - Unconfined Compressive Strength - t/sf

w - Water Content - percentage of oven dry weight - %.

Type failure
B - Bulge Failure
S - Shear Failure
E - Estimated Value

DESIGNED T. M. Yang
CHECKED W. Hsing
DRAWN T. M. Y. Plawler
CHECKED W. Hsing

MAY 24 1961
EXAMINED W. G. Baumann
PASSED
APPROVED R. R. Bartelsmeyer

BORING DATA

F.A.I. RT. 80 SEC. 50:3HB-1
LaSALLE COUNTY
STA. 210 + 80.6

FILE NAME = c:\pw_work\pwidot\calderonl\d0318968\D366c59-sht-exist-bridge-plans.dgn	USER NAME = calderonl	DESIGNED -	REVISED -	STATE OF ILLINOIS DEPARTMENT OF TRANSPORTATION	ORIGINAL CONSTRUCTION FOR INFORMATION ONLY	F.A.I RTE.	SECTION	COUNTY	TOTAL SHEETS	SHEET NO.
		DRAWN -	REVISED -			80	(50-3)HBR-3	LASALLE	137	86
	PLOT SCALE = 100.0000 ' / in.	CHECKED -	REVISED -					CONTRACT NO. 66C59		
	PLOT DATE = 10/9/2019	DATE -	REVISED -		SCALE: SHEET OF SHEETS STA. TO STA.		ILLINOIS FED. AID PROJECT			

STATE OF ILLINOIS
DEPARTMENT OF PUBLIC WORKS & BUILDINGS
DIVISION OF HIGHWAYS

FOR INFORMATION ONLY

ROUTE NO.	SECTION	COUNTY	TOTAL SHEETS	SHEET NO.
80	*	LA SALLE	B-61 F-21	25 11

SHEET NO. 4
11 SHEETS

* 50-3HB , 3HF
50-3HB-1 , 3HF-1
50-3HB-2 , 3HF-2
50-3HB-3 , 3HF-3

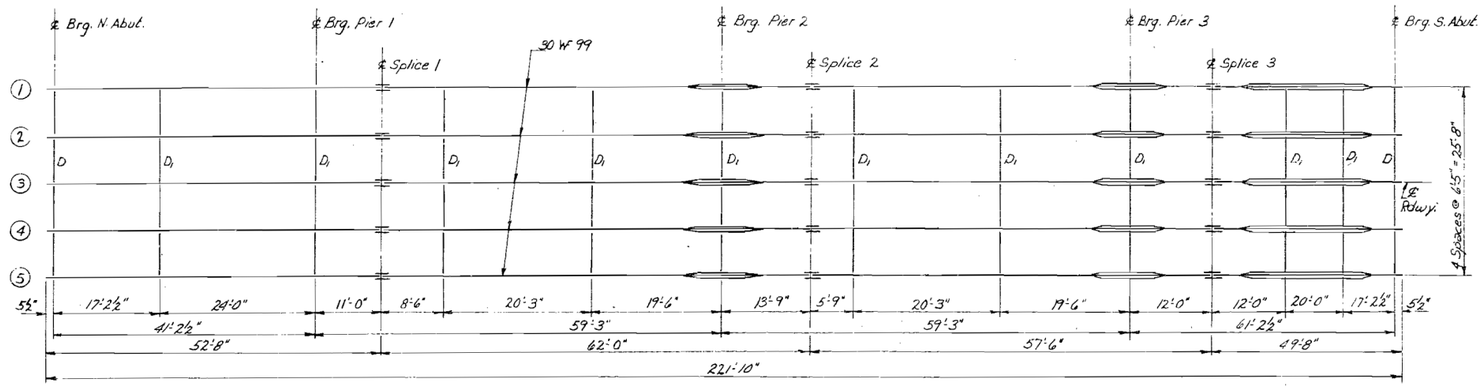

STEEL FRAMING PLAN

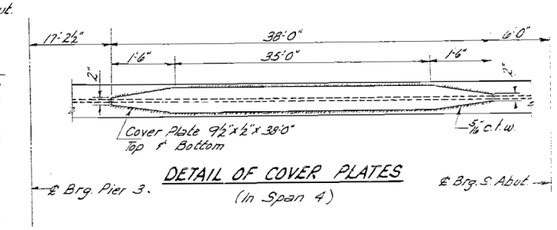

DETAIL OF COVER PLATES
(In Span 4)

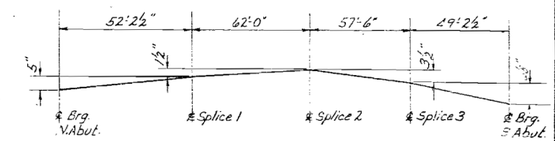

FABRICATION DIAGRAM
(All Beams)

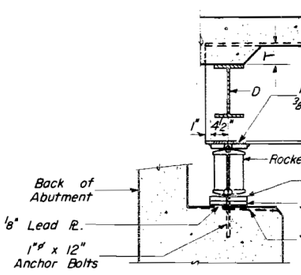

SECTION AT ABUTMENT

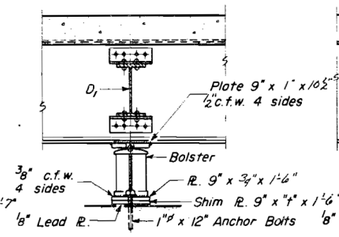

PIER 2

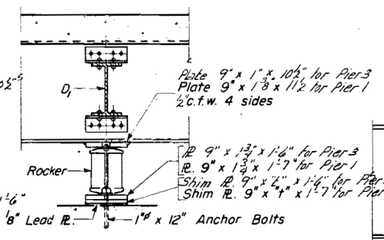

PIER 1 & 3

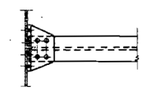

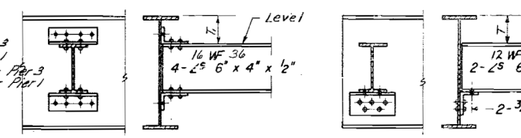

INT. DIAPHRAGM D_1
40 Required

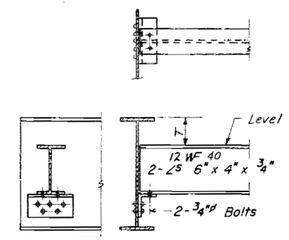

END DIAPHRAGM D
8 Required

ELEVATION TOP OF WF
(For Fabrication Only)

Beam No.	℄ Brg. N. Abut.	℄ Brg. Pier 1	℄ Splice 1	℄ Brg. Pier 2	℄ Splice 2	℄ Brg. Pier 3	℄ Splice 3	℄ Brg. S. Abut.
1 & 5	652.42	652.75	652.84	652.93	652.96	652.93	652.67	652.[illegible]
2 & 4	652.51	652.84	652.93	653.02	653.05	652.82	652.76	652.[illegible]
3	652.54	652.87	652.96	653.05	653.08	652.85	652.79	652.28

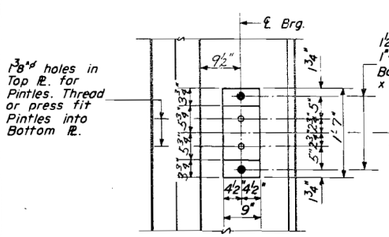

PLAN

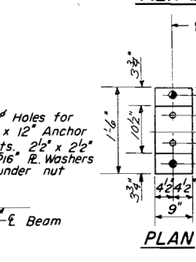

PLAN

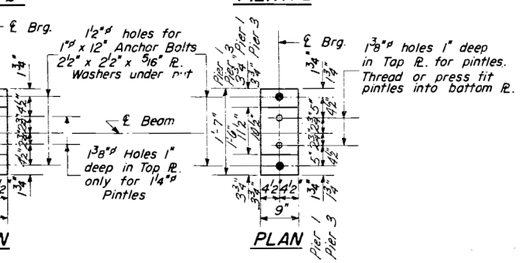

PLAN

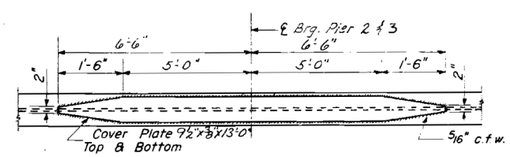

DETAIL OF COVER PLATES
(Over Piers 2 & 3)

TABLE OF T & T_1 DIMENSIONS

Beam No.	1	2	3	4	5
T	3"	4½"	4½"	4½"	3"
T_1	6"	7½"	7½"	7½"	6"

TABLE OF "t" DIMENSIONS

Beam No.	1	2	3	4	5
"t"	0	0	⅞"	0	0

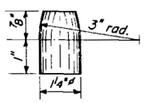

DETAIL OF PINTLE

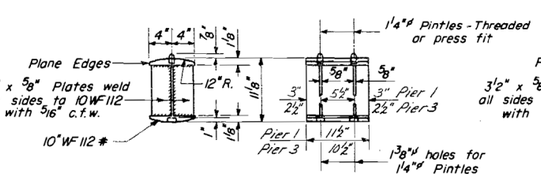

DETAIL OF BEARING AT PIER 1, 3 & ABUTS.
20 - Required

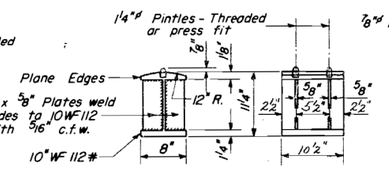

DETAIL OF BEARING AT PIER 2
5 - Required

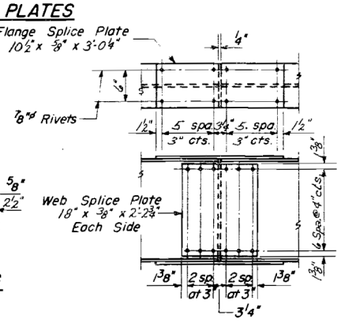

DETAIL OF SPLICE

STRUCTURAL STEEL

F.A.I. RT. 80 SEC. 50-3HB-F-1
LaSALLE COUNTY
STA. 210+80.6

DESIGNED	T. M. Yang	
CHECKED	W. Hung	
DRAWN	T. M. Yang, W. A. Sousaman	Plawler
CHECKED	W. Hung	

MAY 24 1961
EXAMINED — ENGINEER OF BRIDGE AND TRAFFIC STRUCTURES
PASSED — ENGINEER OF DESIGN
APPROVED — CHIEF HIGHWAY ENGINEER

I-2 Re-drawn 8-18-59

FILE NAME = c:\pw_work\pwidot\calderonl\d0318968\D36Ec59-sht-exist-bridge-plans.dgn	USER NAME = calderonl	DESIGNED -	REVISED -
		DRAWN -	REVISED -
	PLOT SCALE = 100.0000 ' / in.	CHECKED -	REVISED -
	PLOT DATE = 10/9/2019	DATE -	REVISED -

STATE OF ILLINOIS
DEPARTMENT OF TRANSPORTATION

ORIGINAL CONSTRUCTION FOR INFORMATION ONLY

SCALE: SHEET OF SHEETS STA. TO STA.

F.A.I. RTE.	SECTION	COUNTY	TOTAL SHEETS	SHEET NO.
80	(50-3)HBR-3	LASALLE	137	87

CONTRACT NO. 66C59
ILLINOIS FED. AID PROJECT

STATE OF ILLINOIS
DEPARTMENT OF PUBLIC WORKS & BUILDINGS
DIVISION OF HIGHWAYS

FOR INFORMATION ONLY

ROUTE NO.	SECTION	COUNTY	TOTAL SHEETS	SHEET NO.
F.A.I. 80	*	LA SALLE	B-61 / F-21	24 / 10
FED. ROAD DIST. NO. 7		ILLINOIS	FED. AID PROJECT	

SHEET NO. 3
11 SHEETS

* 50-3HB, 3HF
50-3HB-1, 3HF-1
50-3HB-2, 3HF-2
50-3HB-3, 3HF-3

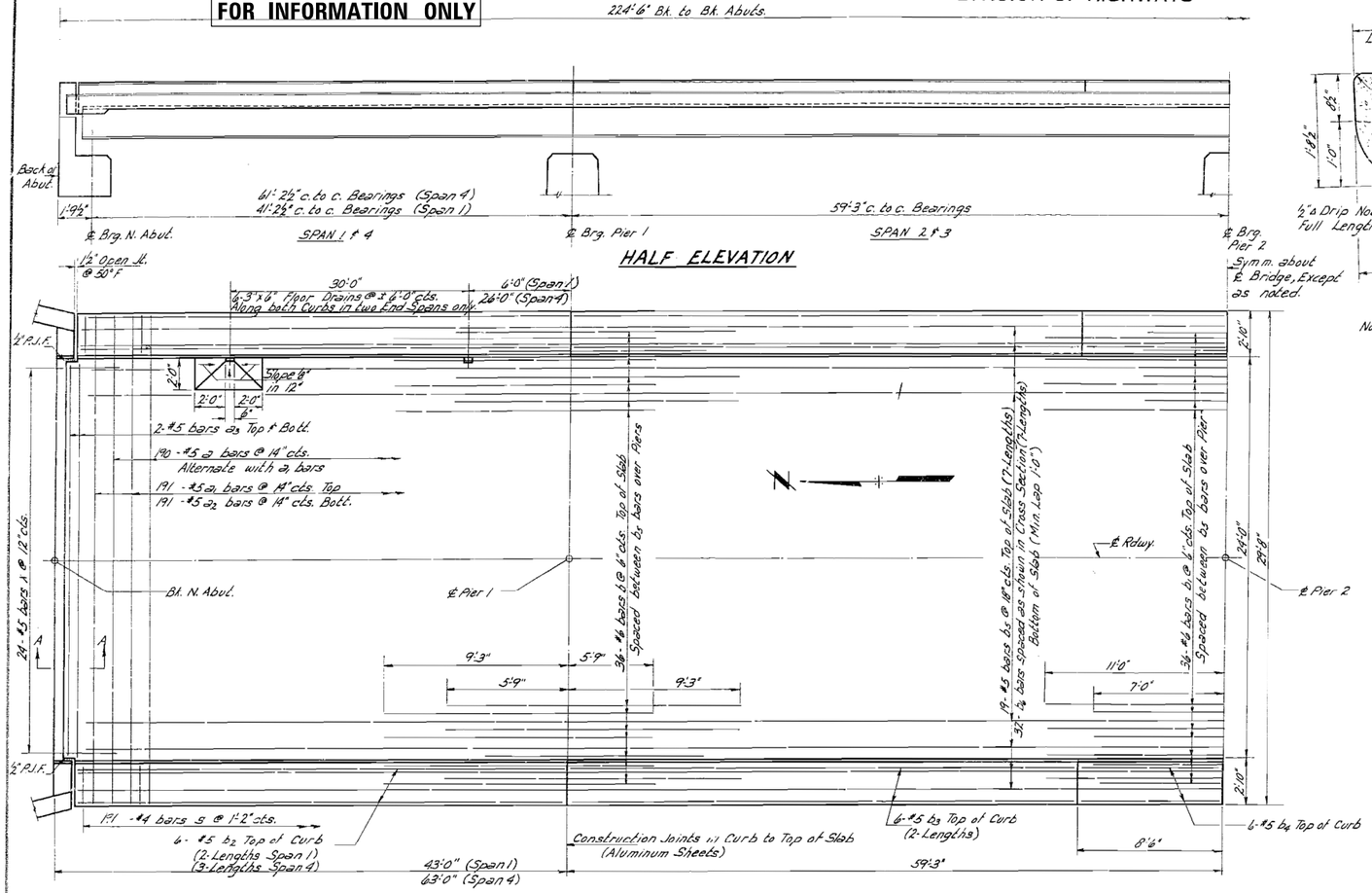

HALF ELEVATION

HALF PLAN

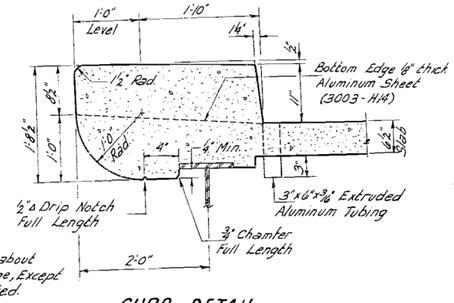

CURB DETAIL

Note: Cost of Aluminum Sheet and drains shall be incidental.

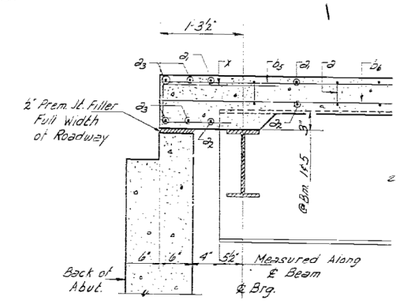

SECTION A-A

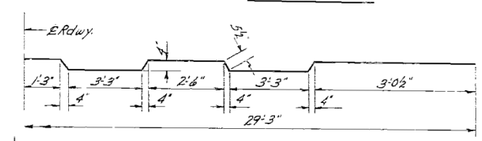

BAR a

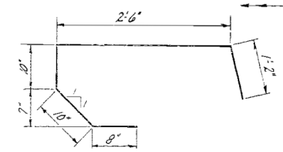

BAR s

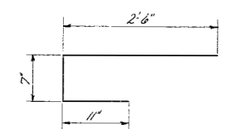

BAR x

BILL OF MATERIAL

Bar	No.	Size	Length	Shape
a	190	#5	30'-3"	
a1	191	#5	29'-3"	
a2	191	#5	28'-3"	
a3	8	#5	23'-9"	
b	72	#6	15'-0"	
b1	36	#6	18'-0"	
b2	60	#5	21'-6"	
b3	48	#5	26'-0"	
b4	24	#5	8'-3"	
b5	133	#5	33'-0"	
b6	224	#4	33'-0"	
s	382	#4	6'-0"	
x	48	#5	4'-0"	
Class X Concrete			Cu. Yds.	186.1
Reinforcement Bars			Lbs.	34,430
* Structural Steel			Lbs.	45,140

*Weight of Bolsters, Rockers, Bearing Plates, Lead Plates and Anchor Bolts included as Structural Steel.
Est. Wt. = 6,430#
Note: Min. bar laps = 20 dia

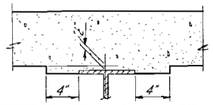

METHOD OF DETERMINING FILLET HEIGHT "L"

After all Structural Steel has been erected, elevations of the top flanges of the beams shall be taken at intervals shown on sheet 5. These elevations subtracted from the "Grade Elevations adjusted for D.L. Deflections" shown on sheet 5, minus floor thickness, equals the fillet heights above top of beams.

DESIGNED	T. M. Yang
CHECKED	W. Hasig
DRAWN	T. M. Yang, P. Lawler
CHECKED	W. Hasig

MAY 24 1961

EXAMINED	W. E. Baumann, ENGINEER OF BRIDGE AND TRAFFIC STRUCTURES
PASSED	E. L. Heck, ENGINEER OF DESIGN
APPROVED	R. R. Bartelsmeyer, CHIEF HIGHWAY ENGINEER

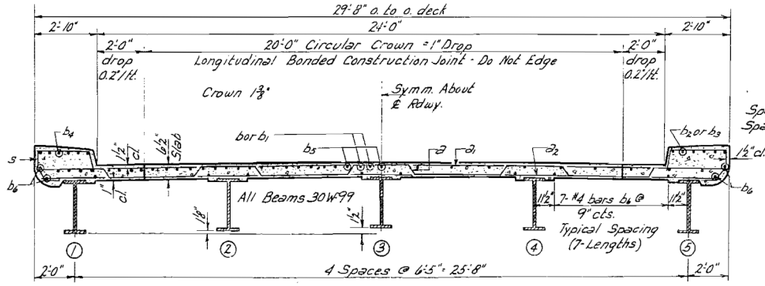

OVER PIERS

CROSS SECTION

TYPICAL

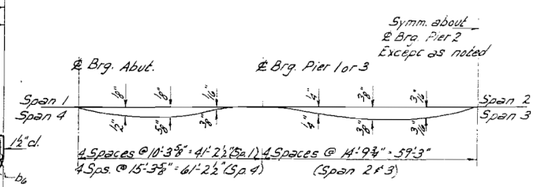

DEAD LOAD DEFLECTION DIAGRAM

(All Beams - for weight of Concrete only)

Note: The above deflections are not for use in the field if the Engineer is working from the Grade Elevations Adjusted for Dead Load Deflection as shown on sh. 5

SUPERSTRUCTURE

F.A.I. RT. 80 SEC. 50-3HB-F-1
LaSALLE COUNTY
STA. 210+80.6

FILE NAME =	USER NAME = calderonl	DESIGNED -	REVISED -
c:\pw_work\pwidot\calderonl\d0318968\D366c59-sht-exist-bridge-plans.dgn		DRAWN -	REVISED -
	PLOT SCALE = 100.0000 ' / in.	CHECKED -	REVISED -
	PLOT DATE = 10/9/2019	DATE -	REVISED -

STATE OF ILLINOIS
DEPARTMENT OF TRANSPORTATION

ORIGINAL CONSTRUCTION FOR INFORMATION ONLY

SCALE: SHEET OF SHEETS STA. TO STA.

F.A.I. RTE.	SECTION	COUNTY	TOTAL SHEETS	SHEET NO.
80	(50-3)HBR-3	LASALLE	137	88
		CONTRACT NO. 66C59		
		ILLINOIS FED. AID PROJECT		

FOR INFORMATION ONLY

STATE OF ILLINOIS
DEPARTMENT OF PUBLIC WORKS & BUILDINGS
DIVISION OF HIGHWAYS

FAI	*	LA SALLE	8-61	2.7

SHEET NO. 2 / SHEETS

* 50-3HB
50-3HB-1
50-3HB-2
50-3HB-3

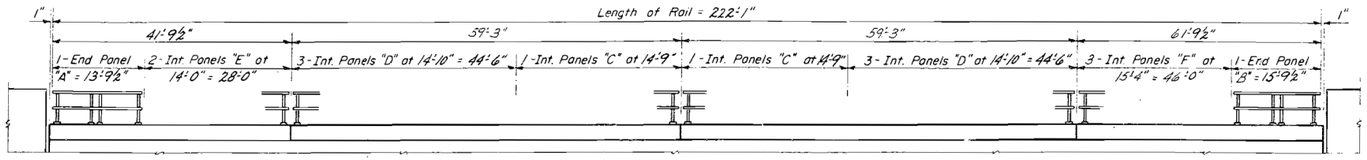

ELEVATION

Showing West Rail
(Rotate 180° For East Rail)

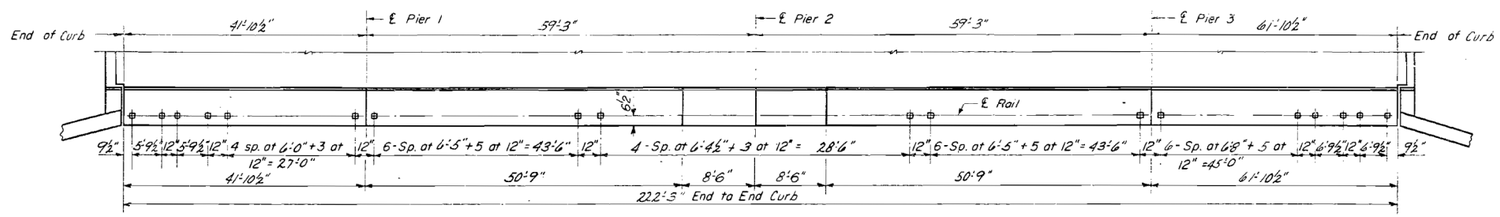

DIMENSIONS OF END PANELS

	Unit A	Unit B
a	8½"	8½"
b	5'-9½"	6'-9½"
c	13'-9½"	15'-9½"

DIMENSIONS OF INTERIOR PANELS

	Unit C	Unit D	Unit E	Unit F
d	6'-4½"	6'-5"	6'-0"	6'-8"
e	14'-9"	14'-10"	14'-0"	15'-4"

PLAN OF RAIL POSTS

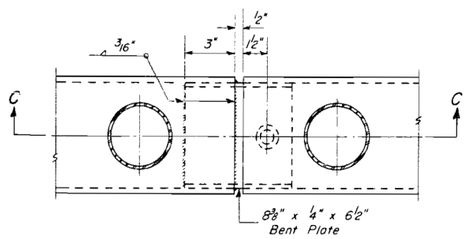

SECTION B-B

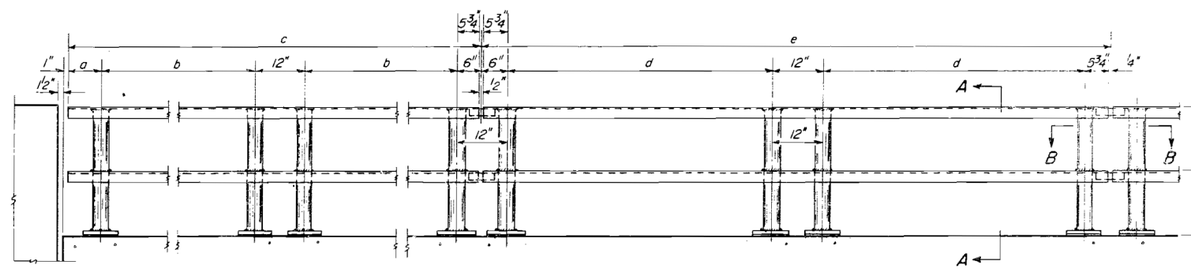

ELEVATION END PANELS

ELEVATION TYPICAL INTERIOR PANEL

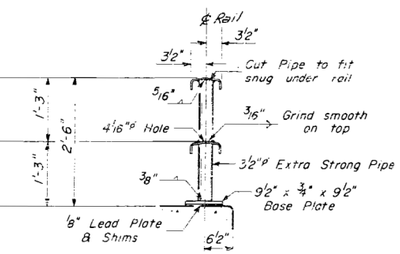

SECTION A-A

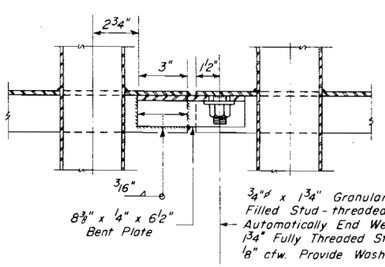

SECTION C-C

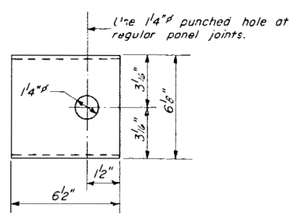

PLAN

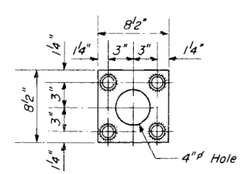

ANCHOR DEVICE

For Single Post at each End of Panel

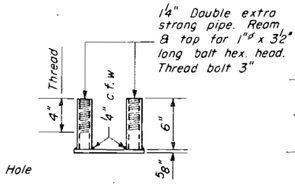

END VIEW

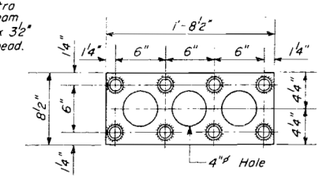

ANCHOR DEVICE

For Double Posts within Each Panel

GENERAL NOTES

After erection all Bolts and Washers shall be spot painted with one coat of red lead before painting handrail with two costs of aluminum paint.

Provide 1-⅛" and 2-1/16" Shims for 50% of the Posts.

BILL OF MATERIAL

Item	Unit	Quantity
Metal Handrail	Lin.Ft.	444

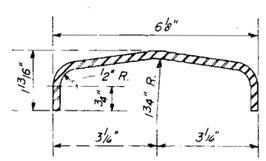

DETAIL OF ¼" BENT PLATE

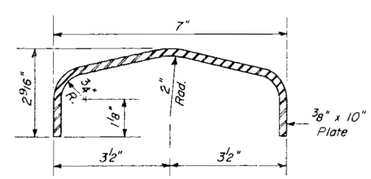

DETAIL OF RAIL

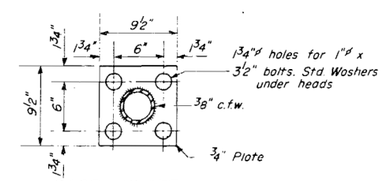

BASE PLATE ALL POSTS

HANDRAIL

F.A.I. RT. 80 SEC. 50-3HB-1
LaSALLE COUNTY
STA. 210 + 80

DESIGNED	T. M. Yang	EXAMINED	May 24 1961 M. Bauman
CHECKED	W. Heing	PASSED	E. Grant
DRAWN	T. M. Y. P. Lawler	APPROVED	R. R. Bartelsmeyer
CHECKED	W. Heing		

FILE NAME = c:\pw_work\pwidot\calderonl\d0318968\D366c59-sht-exist-bridge-plans.dgn	USER NAME = calderonl	DESIGNED -	REVISED -
		DRAWN -	REVISED -
	PLOT SCALE = 100.0000 ' / in.	CHECKED -	REVISED -
	PLOT DATE = 10/9/2019	DATE -	REVISED -

STATE OF ILLINOIS
DEPARTMENT OF TRANSPORTATION

ORIGINAL CONSTRUCTION FOR INFORMATION ONLY

SCALE: SHEET OF SHEETS STA. TO STA.

F.A.I RTE.	SECTION	COUNTY	TOTAL SHEETS	SHEET NO.
80	(50-3)HBR-3	LASALLE	137	89

CONTRACT NO. 66C59

ILLINOIS FED. AID PROJECT

STATE OF ILLINOIS
DEPARTMENT OF PUBLIC WORKS & BUILDINGS
DIVISION OF HIGHWAYS

ROUTE	SECTION	TOTAL SHEETS	SHEET NO.
I-80 *	LASALLE	B-61	26

SHEET NO. 26 OF SHEETS

* 50-3HB
50-3HB-1
50-3HB-2
50-3HB-3

FOR INFORMATION ONLY

SPAN 1

	Beams	Station	Offset	Theoretical Grade Elevations	Grade Elevations Adjusted for Dead Load Deflection
Bk. N. Abut.	1	1397.750	12.833	652.912	652.912
	2	1397.750	6.416	653.008	653.008
	3	1397.750	- .000	653.043	653.043
	4	1397.750	- 6.416	653.008	653.008
	5	1397.750	- 12.833	652.912	652.912
℄ Brg. N. Abut.		1399.542	12.833	652.934	652.934
		1399.542	6.416	653.030	653.030
		1399.542	- .000	653.064	653.064
		1399.542	- 6.416	653.030	653.030
		1399.542	- 12.833	652.934	652.934
		1409.542	12.833	653.047	653.057
		1409.542	6.416	653.144	653.154
		1409.542	- .000	653.178	653.188
		1409.542	- 6.416	653.144	653.154
		1409.542	- 12.833	653.047	653.057
		1419.542	12.833	653.149	653.159
		1419.542	6.416	653.245	653.256
		1419.542	- .000	653.280	653.290
		1419.542	- 6.416	653.245	653.256
		1419.542	- 12.833	653.149	653.159
		1429.542	12.833	653.239	653.244
		1429.542	6.416	653.335	653.341
		1429.542	- .000	653.369	653.375
		1429.542	- 6.416	653.335	653.341
		1429.542	- 12.833	653.239	653.244

SPAN 2

	Beams	Station	Offset	Theoretical Grade Elevations	Grade Elevations Adjusted for Dead Load Deflection
℄ Brg. Pier 1		1440.750	12.833	653.325	653.325
		1440.750	6.416	653.421	653.421
		1440.750	- .000	653.456	653.456
		1440.750	- 6.416	653.421	653.421
		1440.750	- 12.833	653.325	653.325
		1450.750	12.833	653.390	653.404
		1450.750	6.416	653.486	653.500
		1450.750	- .000	653.520	653.534
		1450.750	- 6.416	653.486	653.500
		1450.750	- 12.833	653.390	653.404
		1460.750	12.833	653.442	653.467
		1460.750	6.416	653.539	653.563
		1460.750	- .000	653.573	653.597
		1460.750	- 6.416	653.539	653.563
		1460.750	- 12.833	653.442	653.467
		1470.750	12.833	653.483	653.514
		1470.750	6.416	653.579	653.610
		1470.750	- .000	653.614	653.645
		1470.750	- 6.416	653.579	653.610
		1470.750	- 12.833	653.483	653.514
		1480.750	12.833	653.512	653.532
		1480.750	6.416	653.608	653.629
		1480.750	- .000	653.643	653.663
		1480.750	- 6.416	653.608	653.629
		1480.750	- 12.833	653.512	653.532
		1490.750	12.833	653.529	653.539
		1490.750	6.416	653.625	653.635
		1490.750	- .000	653.659	653.669
		1490.750	- 6.416	653.625	653.635
		1490.750	- 12.833	653.529	653.539

SPAN 3

	Beams	Station	Offset	Theoretical Grade Elevations	Grade Elevations Adjusted for Dead Load Deflection
℄ Brg. Pier 2		1500.000	12.833	653.534	653.534
		1500.000	6.416	653.630	653.630
		1500.000	- .000	653.665	653.665
		1500.000	- 6.416	653.630	653.630
		1500.000	- 12.833	653.534	653.534
		1510.000	12.833	653.528	653.539
		1510.000	6.416	653.624	653.635
		1510.000	- .000	653.659	653.669
		1510.000	- 6.416	653.624	653.635
		1510.000	- 12.833	653.528	653.539
		1520.000	12.833	653.510	653.531
		1520.000	6.416	653.607	653.628
		1520.000	- .000	653.641	653.662
		1520.000	- 6.416	653.607	653.628
		1520.000	- 12.833	653.510	653.531
		1530.000	12.833	653.481	653.512
		1530.000	6.416	653.577	653.608
		1530.000	- .000	653.611	653.642
		1530.000	- 6.416	653.577	653.608
		1530.000	- 12.833	653.481	653.512
		1540.000	12.833	653.439	653.463
		1540.000	6.416	653.535	653.559
		1540.000	- .000	653.570	653.594
		1540.000	- 6.416	653.535	653.559
		1540.000	- 12.833	653.439	653.463
		1550.000	12.833	653.386	653.399
		1550.000	6.416	653.482	653.495
		1550.000	- .000	653.516	653.529
		1550.000	- 6.416	653.482	653.495
		1550.000	- 12.833	653.386	653.399

SPAN 4

	Beams	Station	Offset	Theoretical Grade Elevations	Grade Elevations Adjusted for Dead Load Deflection
℄ Brg. Pier 3		1559.250	12.833	653.325	653.325
		1559.250	6.416	653.422	653.422
		1559.250	- .000	653.456	653.456
		1559.250	- 6.416	653.422	653.422
		1559.250	- 12.833	653.325	653.325
		1569.250	12.833	653.249	653.2[illegible]
		1569.250	6.416	653.345	653.3[illegible]
		1569.250	- .000	653.380	653.4[illegible]
		1569.250	- 6.416	653.345	653.3[illegible]
		1569.250	- 12.833	653.249	653.2[illegible]
		1579.250	12.833	653.161	653.1[illegible]
		1579.250	6.416	653.257	653.2[illegible]
		1579.250	- .000	653.291	653.3[illegible]
		1579.250	- 6.416	653.257	653.2[illegible]
		1579.250	- 12.833	653.161	653.1[illegible]
		1589.250	12.833	653.061	653.[illegible]
		1589.250	6.416	653.157	653.2[illegible]
		1589.250	- .000	653.191	653.2[illegible]
		1589.250	- 6.416	653.157	653.2[illegible]
		1589.250	- 12.833	653.061	653.[illegible]
		1599.250	12.833	652.949	652.9[illegible]
		1599.250	6.416	653.045	653.[illegible]
		1599.250	- .000	653.079	653.[illegible]
		1599.250	- 6.416	653.045	653.[illegible]
		1599.250	- 12.833	652.949	652.9[illegible]
		1609.250	12.833	652.825	652.8[illegible]
		1609.250	6.416	652.921	652.9[illegible]
		1609.250	- .000	652.955	652.9[illegible]
		1609.250	- 6.416	652.921	652.9[illegible]
		1609.250	- 12.833	652.825	652.8[illegible]
℄ Brg. S. Abut.		1620.458	12.833	652.672	652.672
		1620.458	6.416	652.768	652.768
		1620.458	.000	652.802	652.802
		1620.458	6.416	652.768	652.768
		1620.458	12.833	652.672	652.672
Bk. S. Abut.		1622.250	12.833	652.646	652.646
		1622.250	6.416	652.742	652.742
		1622.250	.000	652.776	652.776
		1622.250	6.416	652.742	652.742
		1622.250	12.833	652.646	652.646

Note: Where [illegible] 5 inch depth of [illegible] to deviation [illegible]

DESIGNED T. M. Yang	MAY 24 1961
CHECKED W. Hiving	EXAMINED W. G. Baumann
DRAWN T. M. Yang / P. Lawler	PASSED [illegible]
CHECKED W. Hiving	APPROVED R. C. Bartelsmeyer

TOP OF SLAB ELEVATIONS

F.A.I. RT 80 SEC. 50-3HB-1
LaSALLE COUNTY
STA. 210 + 80.6

FILE NAME = c:\pw_work\pwidot\calderonl\d0318968\D366c59-sht-exist-bridge-plans.dgn	USER NAME = calderonl	DESIGNED -	REVISED -	STATE OF ILLINOIS DEPARTMENT OF TRANSPORTATION	ORIGINAL CONSTRUCTION FOR INFORMATION ONLY	F.A.I RTE. 80	SECTION (50-3)HBR-3	COUNTY LASALLE	TOTAL SHEETS 137	SHEET NO. 90
		DRAWN -	REVISED -					CONTRACT NO. 66C59		
	PLOT SCALE = 100.0000 ' / in.	CHECKED -	REVISED -		SCALE: SHEET OF SHEETS STA. TO STA.		ILLINOIS FED. AID PROJECT			
	PLOT DATE = 10/9/2019	DATE -	REVISED -							

FOR INFORMATION ONLY

STATE OF ILLINOIS
DEPARTMENT OF PUBLIC WORKS & BUILDINGS
DIVISION OF HIGHWAYS

ROUTE NO.	SECTION	COUNTY	TOTAL SHEETS	SHEET NO.
Aurora F.A.I. 80	4	LA SALLE	B-61	29
F.A.I. RTE. SECT. NO.		ILLINOIS	FED. AID PROJECT:	

SHEET NO. 8
// SHEETS

50-3HB
50-3HB-1
50-3HB-2
50-3HB-3

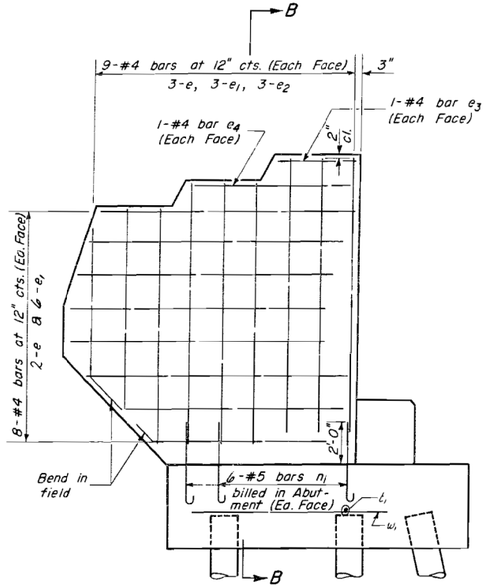

ELEVATION

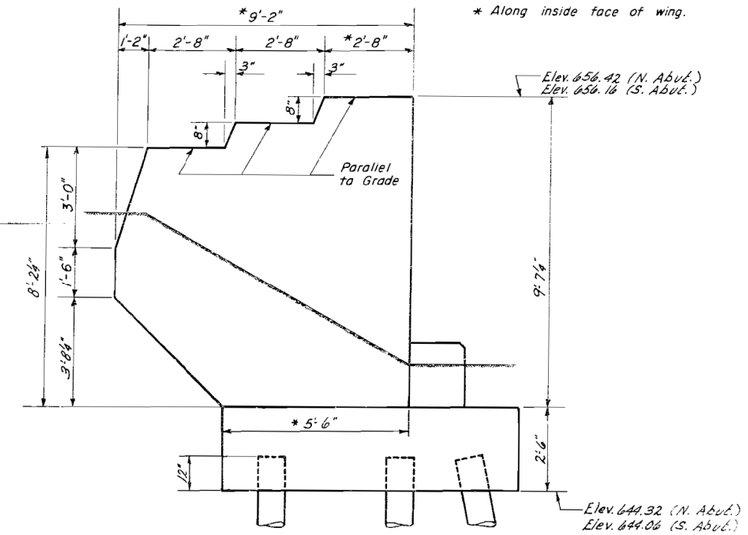

ELEVATION

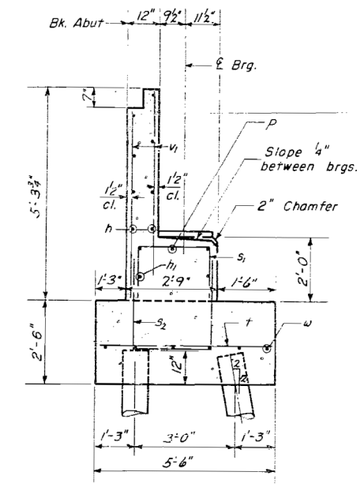

SECTION A-A

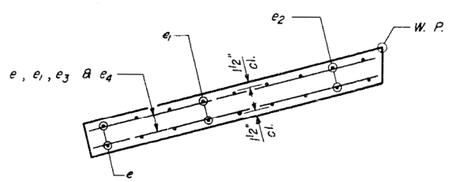

PLAN

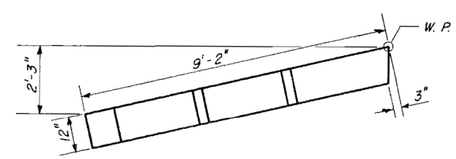

PLAN

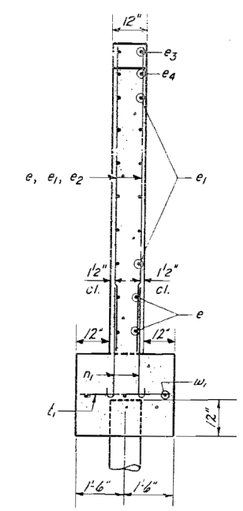

SECTION B-B

FOUR END POSTS
BAR LIST

Bar	No.	Size	Length	Shape
e	40	#4	6'-3"	—
e1	72	#4	7'-9"	—
e2	24	#4	8'-9"	—
e3	8	#4	2'-3"	—
e4	8	#4	4'-9"	—

Note: Work this sheet with sheet 7 of 11

END POSTS

F.A.I. RT. 80 SEC. 50-3HB-1
LaSALLE COUNTY
STA. 210+80.6

DESIGNED	T. M. Yang	EXAMINED	May 24 1961 H. G. Baumann ENGINEER OF BRIDGE AND TRAFFIC STRUCTURES
CHECKED	W. Hsing	PASSED	E. L. Tuve ENGINEER OF DESIGN
DRAWN	T. M. Y. P. Lawler W. A. Sausaman	APPROVED	R. R. Bartelsmeyer CHIEF HIGHWAY ENGINEER
CHECKED	W. Hsing		

AW-2 Drawn 2-2-60

FILE NAME = c:\pw_work\pwidot\calderonl\d0318968\D366c59-sht-exist-bridge-plans.dgn	USER NAME = calderonl	DESIGNED -	REVISED -
		DRAWN -	REVISED -
	PLOT SCALE = 100.0000 ' / in.	CHECKED -	REVISED -
	PLOT DATE = 10/9/2019	DATE -	REVISED -

STATE OF ILLINOIS
DEPARTMENT OF TRANSPORTATION

ORIGINAL CONSTRUCTION FOR INFORMATION ONLY

SCALE: SHEET OF SHEETS STA. TO STA.

F.A.I. RTE.	SECTION	COUNTY	TOTAL SHEETS	SHEET NO.
80	(50-3)HBR-3	LASALLE	137	91
		CONTRACT NO. 66C59		
		ILLINOIS FED. AID PROJECT		

FOR INFORMATION ONLY

STATE OF ILLINOIS
DEPARTMENT OF PUBLIC WORKS & BUILDINGS
DIVISION OF HIGHWAYS

ROUTE NO.	SECTION	COUNTY	TOTAL SHEETS	SHEET NO.
F.A.I. 80	*	LA SALLE	B-61	28
FED. ROAD DIST. NO. 7	ILLINOIS	FED. AID PROJECT-		

SHEET NO. 7
11 SHEETS

* 50-3HB
50-3HB-1
50-3HB-2
50-3HB-3

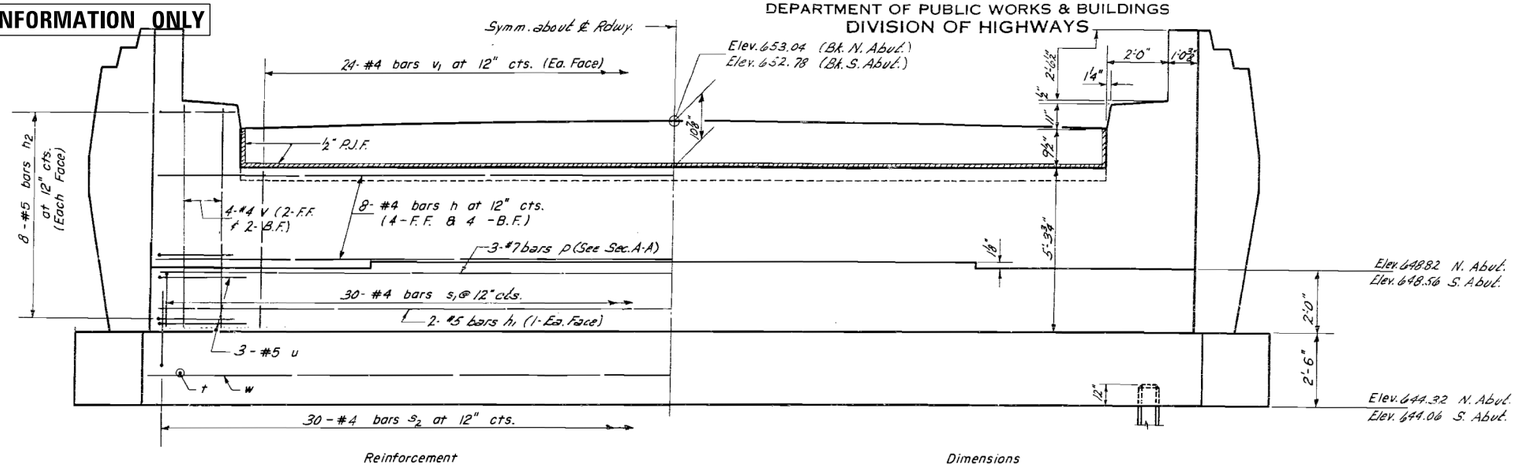

ELEVATION

North Abut. Looking North
South Abut. Looking South

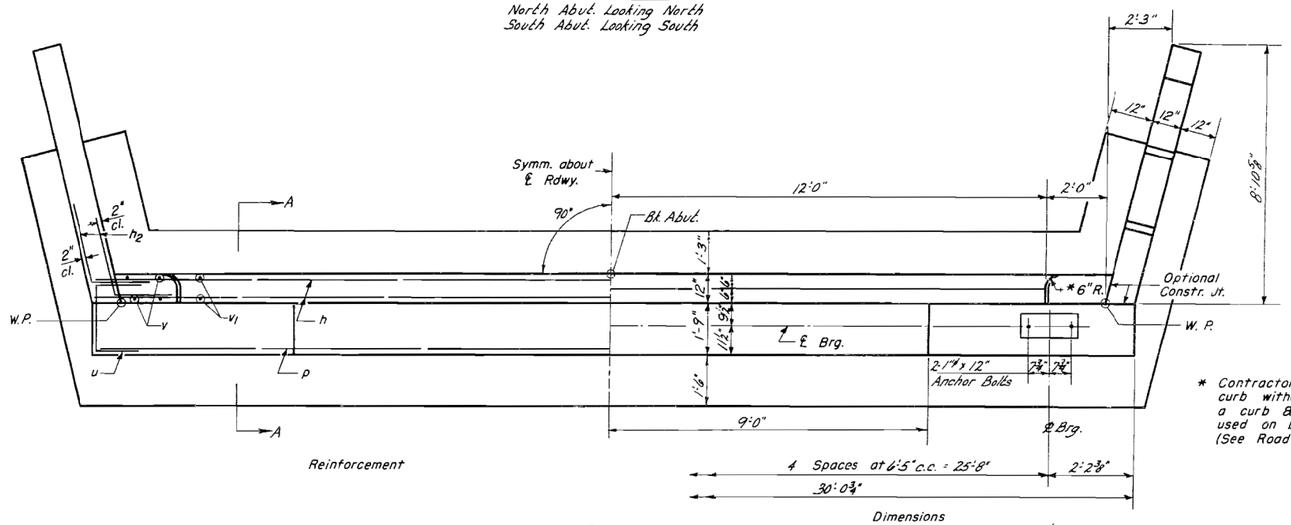

PLAN

* Contractor shall construct curb without radius when a curb & gutter are used on bridge approaches. (See Road Plans).

For Details of End Post & Sec. A-A See Sheet 8

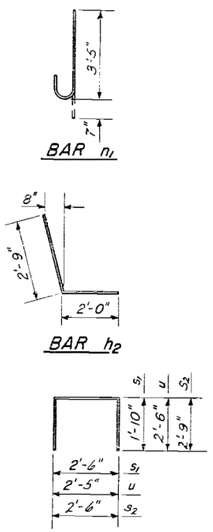

2 ABUTMENT BAR LIST

Bar	No.	Size	Length	Shape
h	32	#4	15'-6"	—
h_1	4	#5	29'-8"	—
h_2	64	#5	4'-9"	L
n_1	48	#5	4'-0"	⊃
p	6	#7	29'-8"	—
s_1	60	#4	6'-2"	⊓
s_2	60	#4	8'-0"	⊓
t	60	#5	5'-3"	—
t_1	32	#5	2'-9"	—
u	12	#5	7'-5"	⊓
v	16	#4	6'-9"	—
v_1	96	#4	4'-6"	—
w	12	#5	30'-0"	—
w_1	12	#5	8'-2"	—

2 ABUTMENT BILL OF MATERIAL

Item	Unit	Quantity
Class X Concrete	Cu. Yds.	65.7
Reinforcement Bars	Lbs.	3,980
Concrete Piles	Lin. Ft.	595
Test Piles (Concrete)	Each	1

Note: Bill of Material includes Reinforcement and Class X Concrete for End Posts.
Work this sheet with sheet 8 of 11

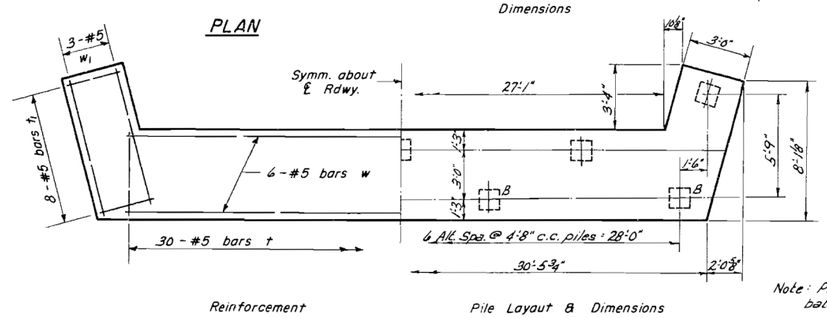

PILE DATA

Type - Concrete
Capacity - 28 Ton Min.
Est. Length - 35 Feet
No. Req'd. - 17 + 1 Test pile @ N. Abut.

Note: Piles marked "B" shall be battered as shown in Sec. A-A.

FOOTING PLAN

DESIGNED	T. M. Yang	
CHECKED	W. Hsieh	
DRAWN	T. M. Yang, P. Lawler, W. A. Sausaman	
CHECKED	W. Hsieh	

MAY 24 1961

EXAMINED — N. G. Baumann, ENGINEER OF BRIDGE AND TRAFFIC STRUCTURES
PASSED — ENGINEER OF DESIGN
APPROVED — R. R. Bartelsmeyer, CHIEF HIGHWAY ENGINEER

A-7 Drawn 1-27-50

ABUTMENTS

F.A.I. RT. 80 SEC. 50-3HB-1
LASALLE COUNTY
STA. 210+80.6

FILE NAME =	USER NAME = calderonl	DESIGNED -	REVISED -
c:\pw_work\pwidot\calderonl\d0318968\D366c59-sht-exist-bridge-plans.dgn		DRAWN -	REVISED -
	PLOT SCALE = 100.0000 ' / in.	CHECKED -	REVISED -
	PLOT DATE = 10/9/2019	DATE -	REVISED -

STATE OF ILLINOIS
DEPARTMENT OF TRANSPORTATION

ORIGINAL CONSTRUCTION FOR INFORMATION ONLY

SCALE: SHEET OF SHEETS STA. TO STA.

F.A.I. RTE.	SECTION	COUNTY	TOTAL SHEETS	SHEET NO.
80	(50-3)HBR-3	LASALLE	137	92
		CONTRACT NO. 66C59		
		ILLINOIS FED. AID PROJECT		

FOR INFORMATION ONLY

STATE OF ILLINOIS
DEPARTMENT OF PUBLIC WORKS & BUILDINGS
DIVISION OF HIGHWAYS

F.A.I. 80	#	LA SALLE	B-61	31

SHEET NO. 10
11 SHEETS

Z50-3HB
50-3HB-1
50-3HB-2
50-3HB-3

PILE DATA

Type: Creo.
Capacity: 20T
Est. Length: 20'
No. Req'd.: 18 + 1 Test Pile

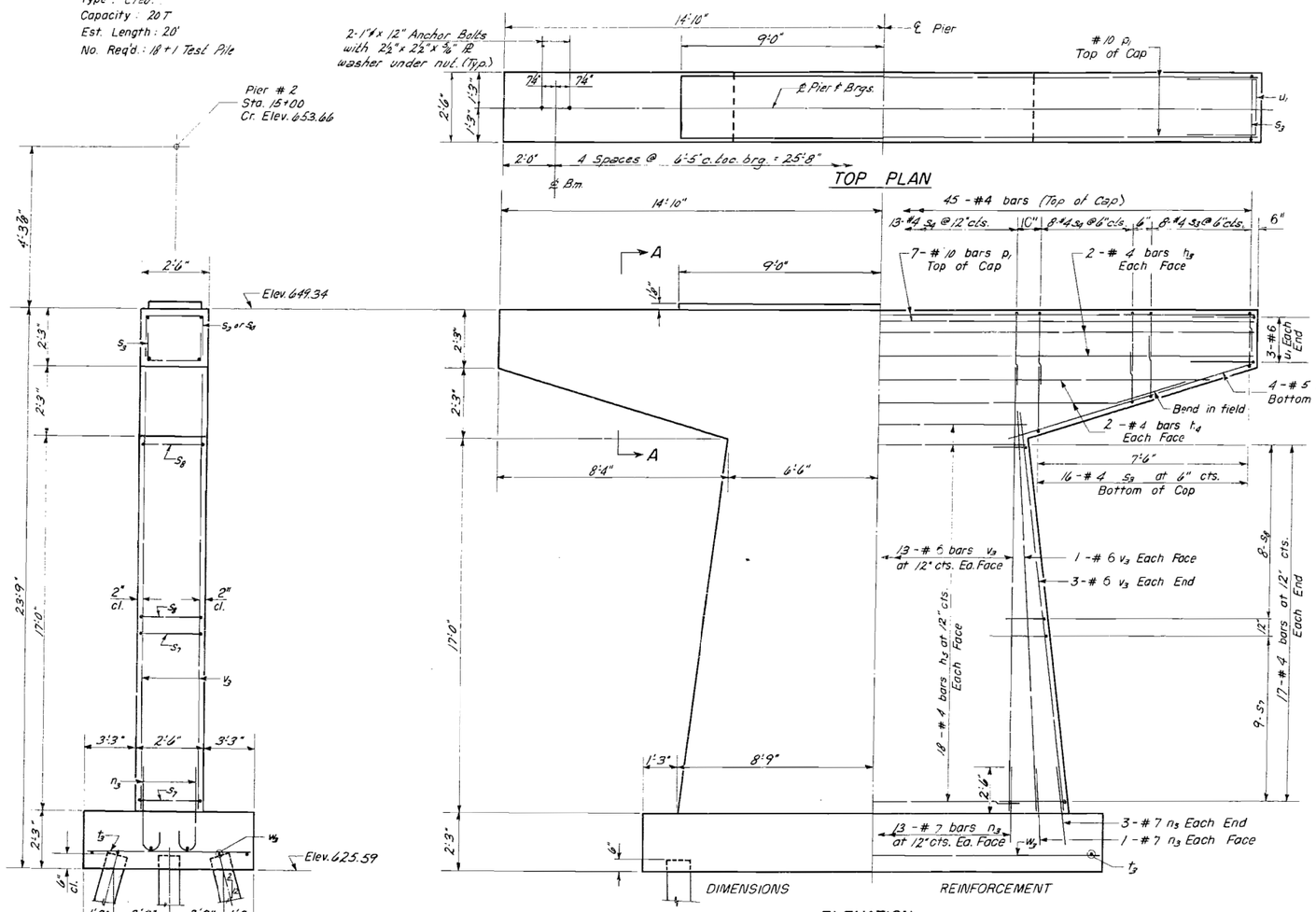

Note: All edges shall have standard ¾" chamfers except footings. Space reinforcement to clear Anchor bolts. Pour step monolithically with top of Pier.

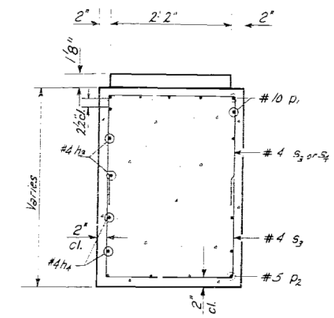

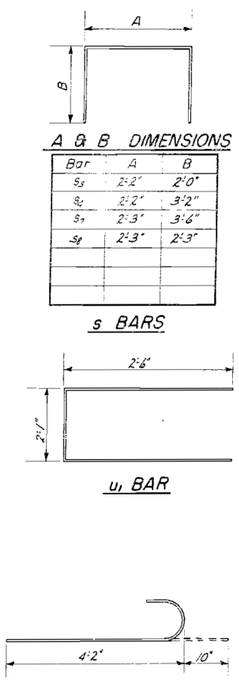

Bar	A	B
s_3	2'-2"	2'-0"
s_4	2'-2"	3'-2"
s_7	2'-3"	3'-6"
s_8	2'-3"	2'-3"

PIER 2 BILL OF MATERIAL

Bar	No.	Size	Length	Shape
h_5	4	#4	29'-4"	—
h_4	4	#4	24'-6"	—
h_5	34	#4	12'-9"	—
n_3	36	#7	5'-0"	⊃
p_1	7	#10	29'-4"	—
p_2	8	#5	9'-6"	—
s_3	48	#4	6'-2"	⊓
s_4	29	#4	8'-6"	⊓
s_7	18	#4	9'-3"	⊓
s_8	16	#4	6'-9"	⊓
t_3	32	#6	8'-9"	—
u_1	6	#6	7'-1"	⊏
v_3	36	#6	19'-0"	—
w_3	6	#5	19'-9"	—
Class A Excav. for Struct.			Cu. Yds.	60
Class X Concrete			Cu. Yds.	49.7
Reinforcement Bars			Lbs.	3,970
Creosoted Piles			Lin. Ft.	360
Test Piles (Timber)			Ea.	1

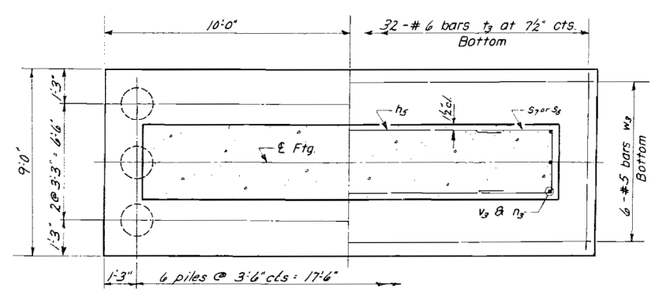

DESIGNED	T. M. Young	EXAMINED	W. E. Baumann
CHECKED	W. Heinz	PASSED	C. H. Heinz
DRAWN	T. M. Y. Phawler / W. A. Sausaman	APPROVED	R. H. Bartelsmeyer
CHECKED	W. Heinz		

MAY 24 1961

P-2 Re-drawn 7-17-59 Rev. 11-25-59

PIER 2

F.A.I. RT. 80 SEC. 50-3HB-1
LaSALLE COUNTY
STA. 210+80.6

FILE NAME = c:\pw_work\pwidot\calderonl\d0318968\D366c59-sht-exist-bridge-plans.dgn	USER NAME = calderonl	DESIGNED -	REVISED -
	PLOT SCALE = 100.0000 ' / in.	DRAWN -	REVISED -
	PLOT DATE = 10/9/2019	CHECKED -	REVISED -
		DATE -	REVISED -

STATE OF ILLINOIS
DEPARTMENT OF TRANSPORTATION

ORIGINAL CONSTRUCTION FOR INFORMATION ONLY

SCALE: SHEET OF SHEETS STA. TO STA.

F.A.I. RTE.	SECTION	COUNTY	TOTAL SHEETS	SHEET NO.
80	(50-3)HBR-3	LASALLE	137	93

CONTRACT NO. 66C59

ILLINOIS FED. AID PROJECT

FOR INFORMATION ONLY

STATE OF ILLINOIS
DEPARTMENT OF PUBLIC WORKS & BUILDINGS
DIVISION OF HIGHWAYS

80	*	LA SALLE	B-61	30

SHEET NO 9 / 11 SHEETS

*50-3HB
50-3HB-1
50-3HB-2
50-3HB-3

PILE DATA

Type : Creo.
Capacity : 20T
Est. Length : 20'
No. Req'd. : 29

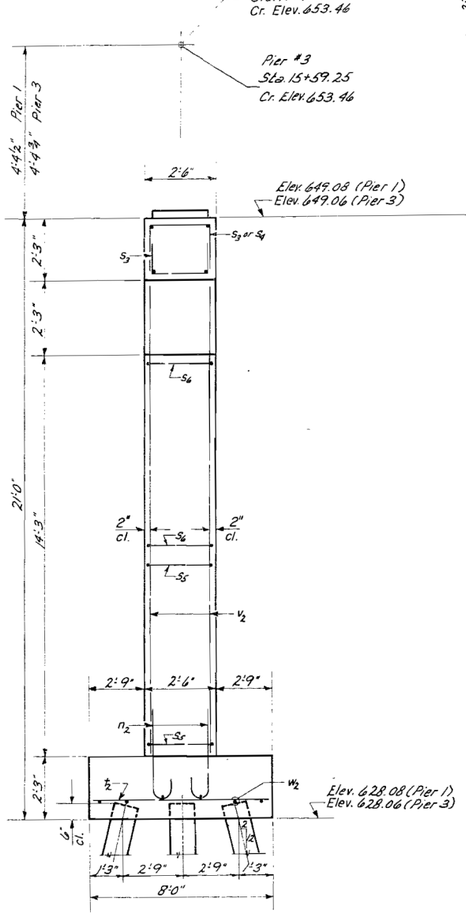

END VIEW

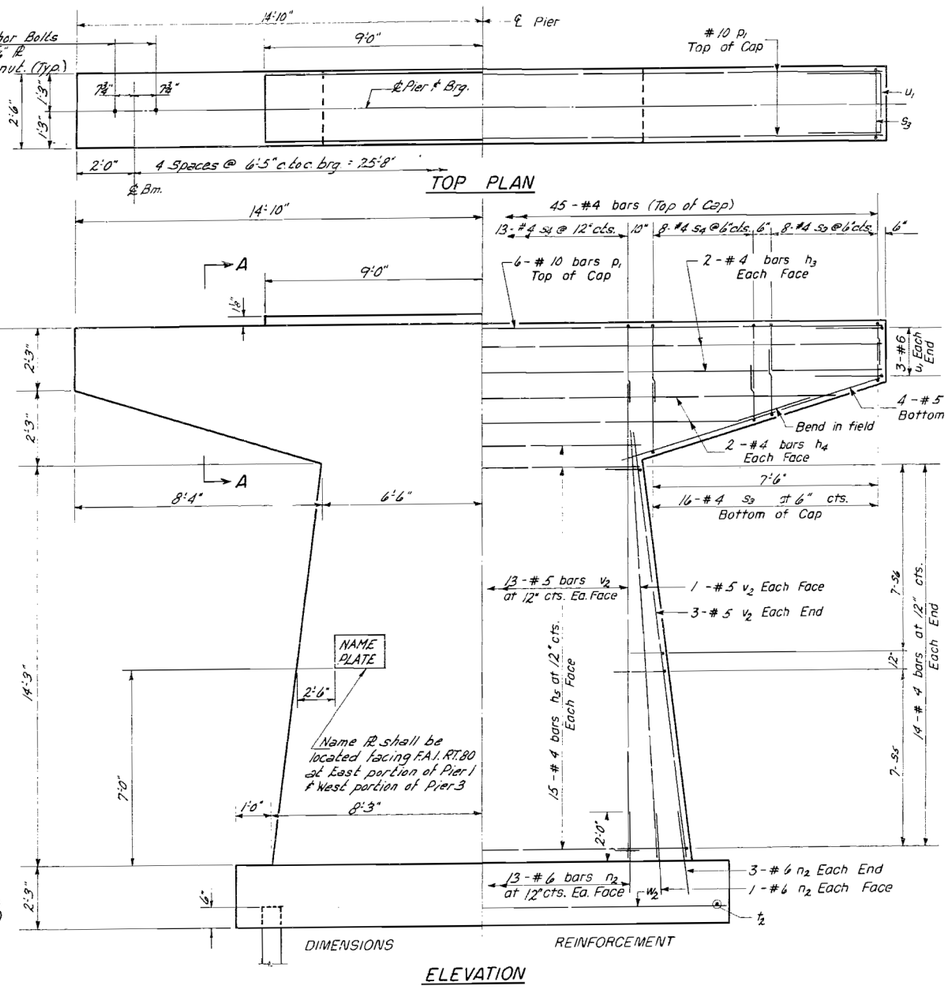

TOP PLAN

ELEVATION

Note: All edges shall have standard ¾" chamfers except footings.
Space reinforcement to clear Anchor Bolts.
Pour step monolithically with top of Pier.

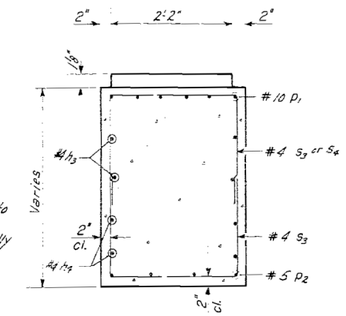

SECTION A-A

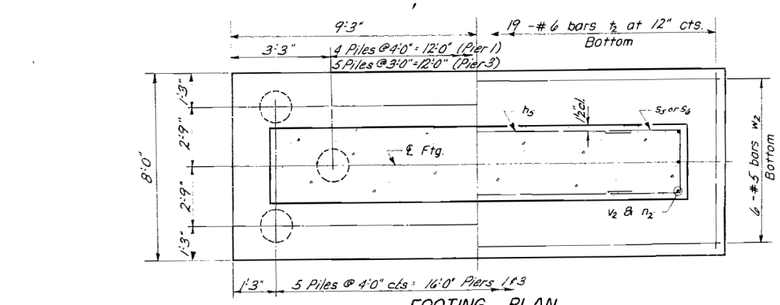

FOOTING PLAN

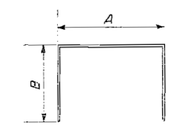

A & B DIMENSIONS

Bar	A	B
s3	2'-2"	2'-0"
s2	2'-2"	3'-2"
s3	2'-3"	2'-9"
s6	2'-3"	1'-9"

s BARS

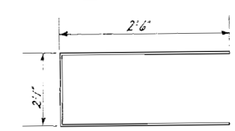

u1 BAR

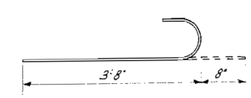

n2 BAR

PIERS 1 & 3 BILL OF MATERIAL

Bar	No.	Size	Length	Shape
h3	8	#4	29'-4"	—
h4	8	#4	24'-6"	—
h5	60	#4	12'-9"	—
n2	72	#6	4'-4"	
p1	12	#10	29'-4"	—
p2	16	#5	9'-6"	—
s3	96	#4	6'-2"	
s4	58	#4	8'-6"	
s5	28	#4	7'-9"	
s6	28	#4	5'-9"	
t2	38	#6	7'-9"	—
u1	12	#6	7'-1"	
v2	72	#5	16'-3"	—
w2	12	#5	18'-3"	—
Class A Excav. for Struct.			Cu.Yds.	90
Class X Concrete			Cu.Yds.	84.8
Reinforcement Bars			Lbs.	5,940
Creosoted Piles			Lin.Ft.	560
Name Plates			Ea.	2

PIERS 1 & 3

F.A.I. RT. 80 SEC. 50-3HB-1
LaSALLE COUNTY
STA. 210+80.6

DESIGNED	T. M. Yang
CHECKED	W. Heinz
	T. M. Yang, P. Lawler
DRAWN	W. A. Sausaman
CHECKED	W. Heinz

MAY 24 1961
EXAMINED W. E. Baumann
PASSED E. L. Hendricks
APPROVED R. R. Bartelsmeyer

P-2 Re-drawn 7-17-59 Rev. 11-25-59

FILE NAME = c:\pw_work\pwidot\calderonl\d0318968\D366c59-sht-exist-bridge-plans.dgn	USER NAME = calderonl	DESIGNED -	REVISED -
		DRAWN -	REVISED -
	PLOT SCALE = 100.0000 ' / in.	CHECKED -	REVISED -
	PLOT DATE = 10/9/2019	DATE -	REVISED -

STATE OF ILLINOIS
DEPARTMENT OF TRANSPORTATION

ORIGINAL CONSTRUCTION FOR INFORMATION ONLY

SCALE: SHEET OF SHEETS STA. TO STA.

F.A.I. RTE.	SECTION	COUNTY	TOTAL SHEETS	SHEET NO.
80	(50-3)HBR-3	LASALLE	137	94
		CONTRACT NO. 66C59		
		ILLINOIS FED. AID PROJECT		

FOR INFORMATION ONLY

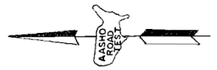

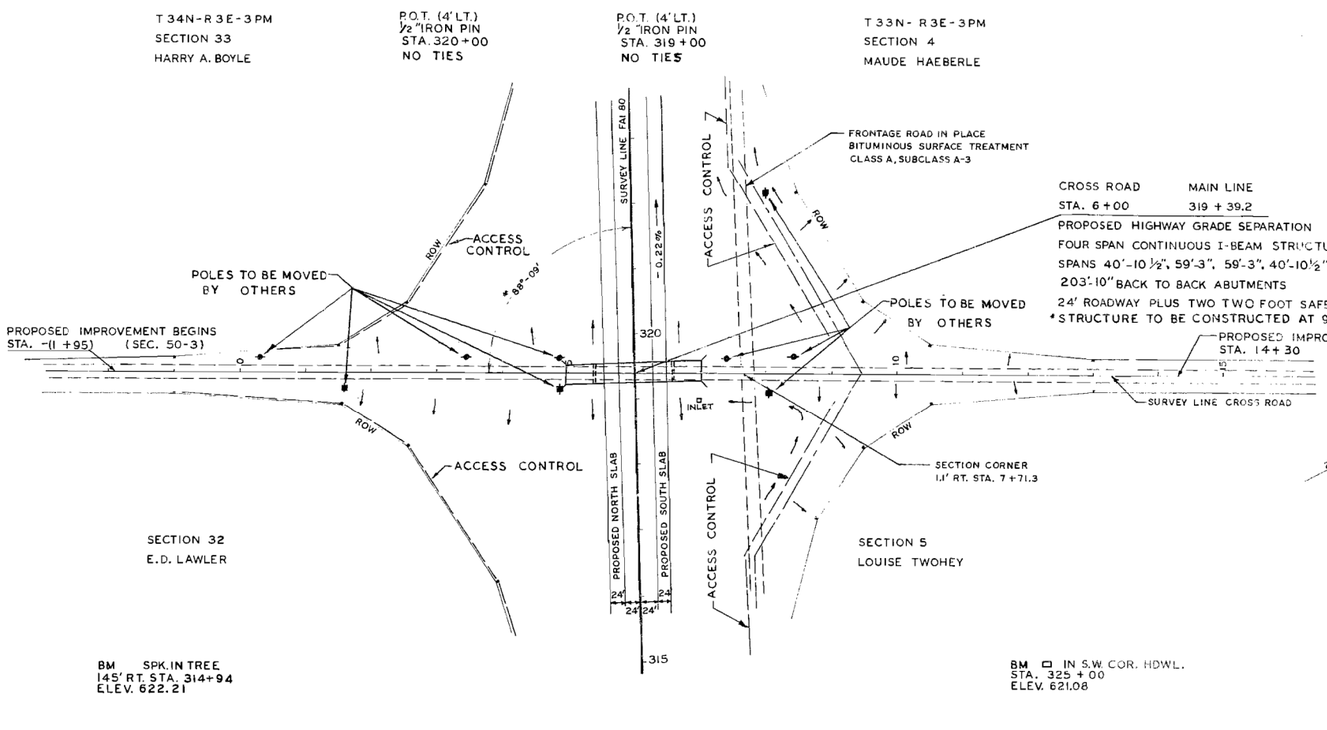

80	50-3HF 50-3HB	LA SALLE	B-61 F-21	93 12

50-3HB-1, HF-1
50-3HB-2, HF-2
50-3HB-3, HF-3

CROSS ROAD STA. 6+00 — MAIN LINE 319+39.2

PROPOSED HIGHWAY GRADE SEPARATION
FOUR SPAN CONTINUOUS I-BEAM STRUCTURE - *SECTION 50-3HB-2*
SPANS 40'-10½", 59'-3", 59'-3", 40'-10½"
203'-10" BACK TO BACK ABUTMENTS
24' ROADWAY PLUS TWO TWO FOOT SAFETY WALKS
*STRUCTURE TO BE CONSTRUCTED AT 90° TO SURVEY LINE FAI 80

LEGEND
- TELEPHONE POLE
- POWER POLE

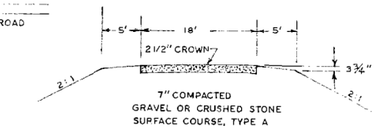

TYPICAL SECTION
CROSS ROAD

NOTE: 10,260 CU. YDS. EARTH EXCAVATION TO MAKE ABUTMENT CONES TO BE SECURED FROM TURNAROUNDS - SEE SHEET NO. 2 & CROSS SECTIONS
0 STA. YDS. OVERHAUL

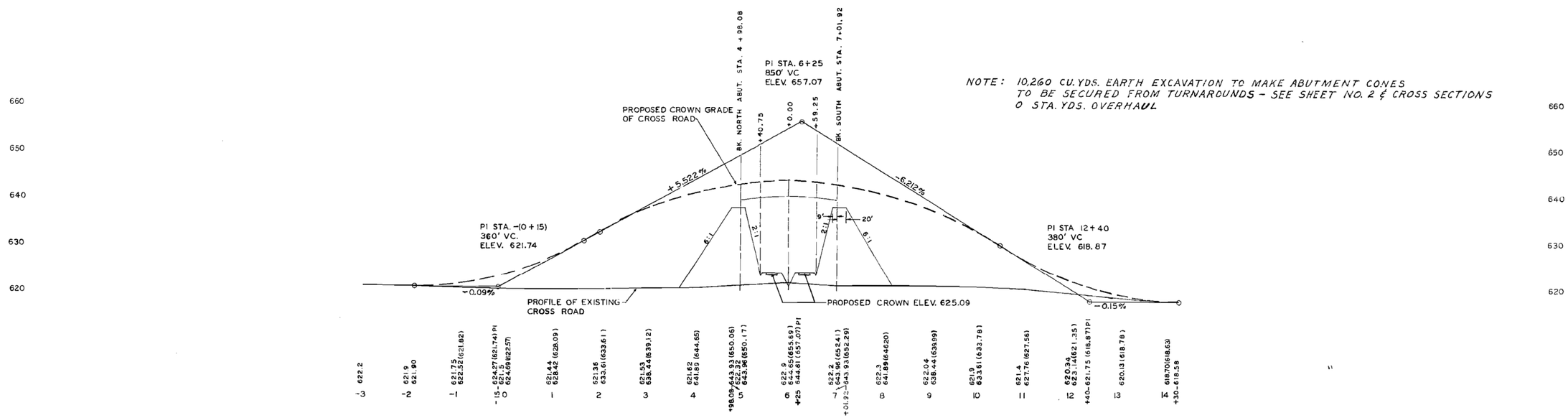

FILE NAME =	USER NAME = calderonl	DESIGNED -	REVISED -	STATE OF ILLINOIS DEPARTMENT OF TRANSPORTATION	ORIGINAL CONSTRUCTION FOR INFORMATION ONLY	F.A.I RTE.	SECTION	COUNTY	TOTAL SHEETS	SHEET NO.
c:\pw_work\pwidot\calderonl\d0318968\D366c59-sht-exist-bridge-plans.dgn		DRAWN -	REVISED -			80	(50-3)HBR-3	LASALLE	137	95
	PLOT SCALE = 100.0000 ' / in.	CHECKED -	REVISED -					CONTRACT NO. 66C59		
	PLOT DATE = 10/9/2019	DATE -	REVISED -		SCALE: SHEET OF SHEETS STA. TO STA.		ILLINOIS	FED. AID PROJECT		

FOR INFORMATION ONLY

STATE OF ILLINOIS
DEPARTMENT OF PUBLIC WORKS & BUILDINGS
DIVISION OF HIGHWAYS

ROUTE NO.	SECTION	COUNTY	TOTAL SHEETS	SHEET NO.
F.A.I. 80	*	LA SALLE	8-61	32

SHEET NO. // // SHEETS

FED. ROAD DIST. NO. | ILLINOIS | FED. AID PROJECT

* 50-3HB, 3HB-1, 3HB-2, 3HB-3

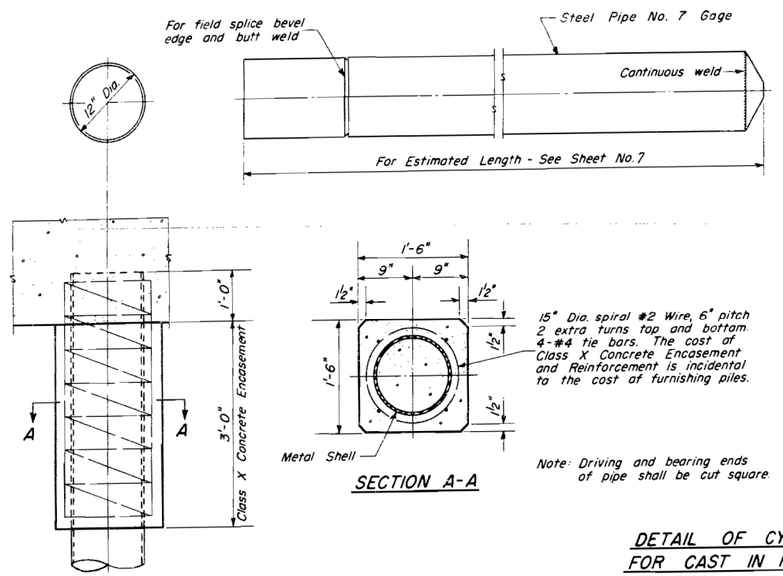

SECTION A-A

DETAIL OF CYLINDRICAL STEEL SHELL FOR CAST IN PLACE CONCRETE PILES

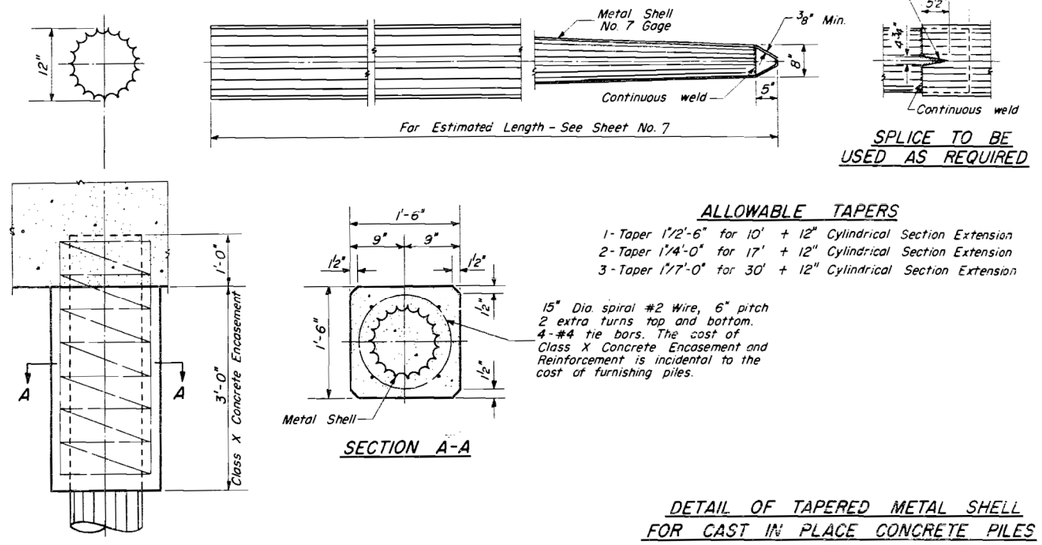

SPLICE TO BE USED AS REQUIRED

SECTION A-A

ALLOWABLE TAPERS

1 - Taper 1"/2'-6" for 10' + 12" Cylindrical Section Extension
2 - Taper 1"/4'-0" for 17' + 12" Cylindrical Section Extension
3 - Taper 1"/7'-0" for 30' + 12" Cylindrical Section Extension

DETAIL OF TAPERED METAL SHELL FOR CAST IN PLACE CONCRETE PILES

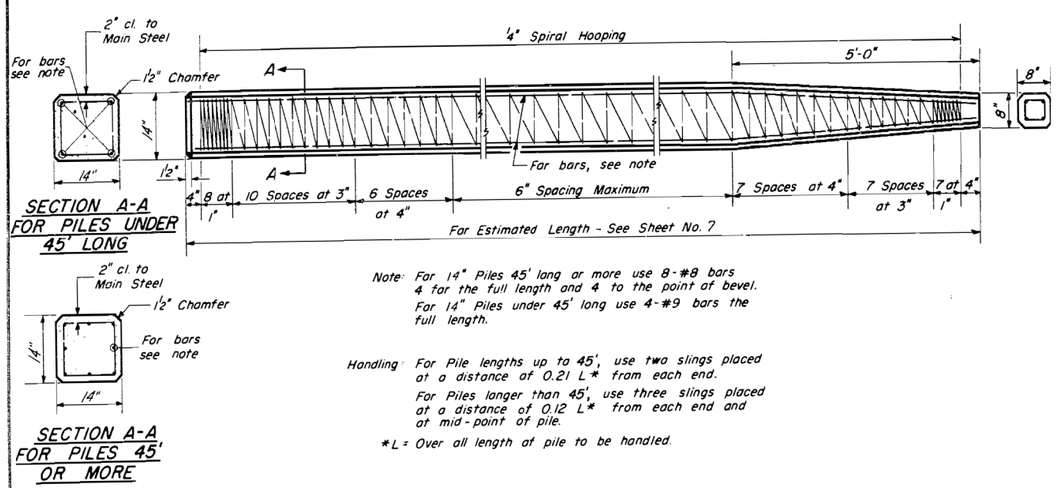

SECTION A-A FOR PILES UNDER 45' LONG

SECTION A-A FOR PILES 45' OR MORE

Note: For 14" Piles 45' long or more use 8-#8 bars 4 for the full length and 4 to the point of bevel.
For 14" Piles under 45' long use 4-#9 bars the full length.

Handling: For Pile lengths up to 45', use two slings placed at a distance of 0.21 L* from each end.
For Piles longer than 45', use three slings placed at a distance of 0.12 L* from each end and at mid-point of pile.

*L = Over all length of pile to be handled.

DESIGNED	T. M. Yang
CHECKED	W. Hering
DRAWN	T. M. Y., P. Lawler, W. A. Sausaman
CHECKED	W. Hering

MAY 24 1961
EXAMINED M. E. Bunnemann — ENGINEER OF BRIDGE AND TRAFFIC STRUCTURES
PASSED E. L. Hecht — ENGINEER OF DESIGN
APPROVED R. R. Bartelsmeyer — CHIEF HIGHWAY ENGINEER

X-1 Re-drawn 9-24-59 Rev. 9-23-60 Rev. 11-23-60

DETAIL OF PRECAST CONCRETE PILES

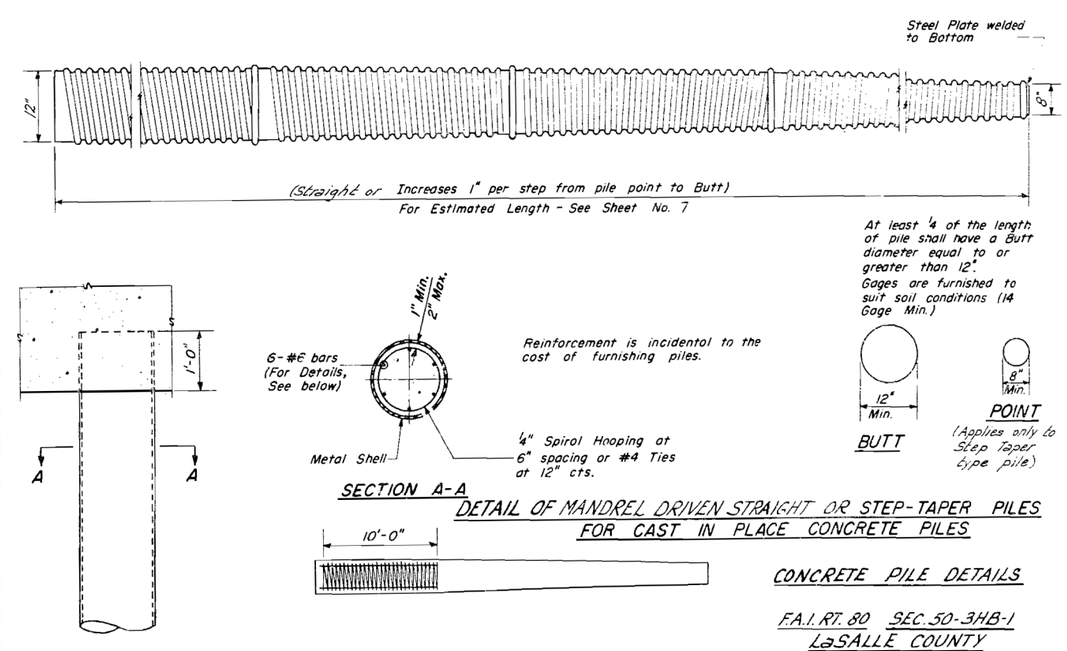

At least ¼ of the length of pile shall have a Butt diameter equal to or greater than 12".
Gages are furnished to suit soil conditions (14 Gage Min.)

BUTT

POINT (Applies only to Step Taper type pile)

SECTION A-A

DETAIL OF MANDREL DRIVEN STRAIGHT OR STEP-TAPER PILES FOR CAST IN PLACE CONCRETE PILES

CONCRETE PILE DETAILS

F.A.I. RT. 80 SEC. 50-3HB-1
LaSALLE COUNTY
STA. 210 + 80.6

FILE NAME =	USER NAME = calderonl	DESIGNED -	REVISED -
c:\pw_work\pwidot\calderonl\d0318968\D366c59-sht-exist-bridge-plans.dgn		DRAWN -	REVISED -
	PLOT SCALE = 100.0000 ' / in.	CHECKED -	REVISED -
	PLOT DATE = 10/9/2019	DATE -	REVISED -

STATE OF ILLINOIS
DEPARTMENT OF TRANSPORTATION

ORIGINAL CONSTRUCTION FOR INFORMATION ONLY

SCALE: SHEET OF SHEETS STA. TO STA.

F.A.I. RTE.	SECTION	COUNTY	TOTAL SHEETS	SHEET NO.
80	(50-3)HBR-3	LASALLE	137	96

CONTRACT NO. 66C59

ILLINOIS FED. AID PROJECT

FOR INFORMATION ONLY

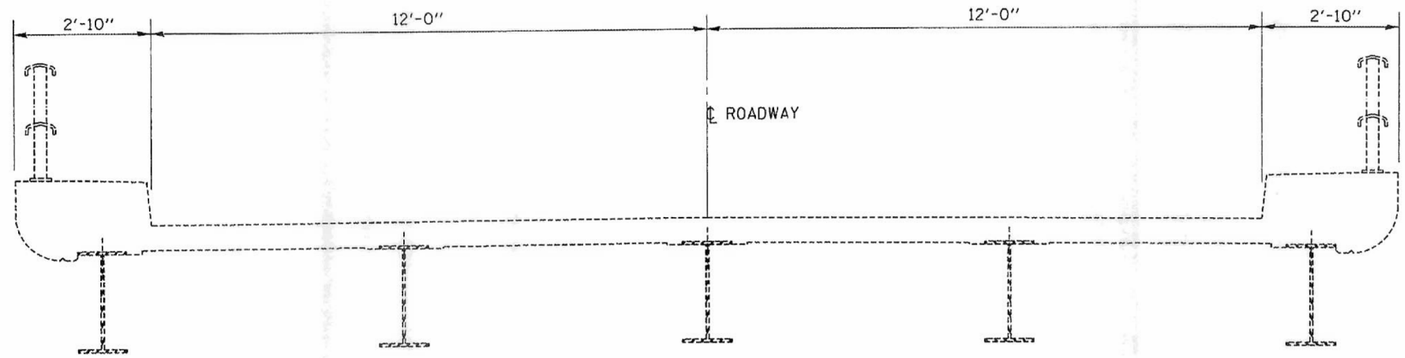

TYPICAL SECTION
C.H. 9 @ SN 050-0081
LOOKING NORTH

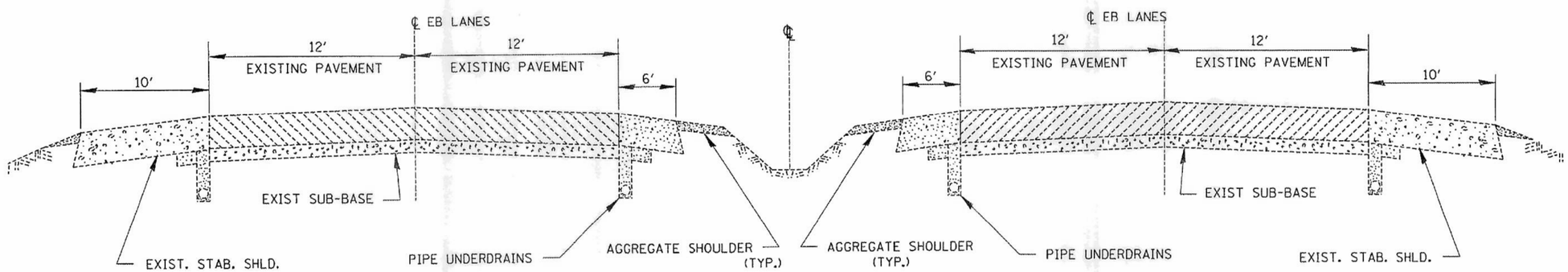

TYPICAL SECTION
FAI 80
LOOKING WEST

FILE NAME = c:\projects\mchd07\0500081\0500081.dgn	USER NAME = vaninger.jr	DESIGNED - RON WOODSHANK	REVISED -	STATE OF ILLINOIS DEPARTMENT OF TRANSPORTATION	TYPICAL SECTIONS	F.A.I. RTE.	SECTION	COUNTY	TOTAL SHEETS	SHEET NO.
		DRAWN - RON WOODSHANK	REVISED -			80	(50-3HB-F-1)I	LASALLE	11	4
	PLOT SCALE = 103.4829 ' / IN.	CHECKED -	REVISED -					CONTRACT NO. 66758		
	PLOT DATE = Feb 11, 2008 - 07:21:54 AM	DATE -	REVISED -		SCALE: SHEET NO. 1 OF 1 SHEETS STA. TO STA.	FED. ROAD DIST. NO.	ILLINOIS	FED. AID PROJECT		

FILE NAME = c:\pw_work\pwidot\calderonl\d0318968\D366c59-sht-exist-bridge-plans.dgn	USER NAME = calderonl	DESIGNED -	REVISED -	STATE OF ILLINOIS DEPARTMENT OF TRANSPORTATION	BEAM REPLACEMENT FOR INFORMATION ONLY	F.A.I RTE.	SECTION	COUNTY	TOTAL SHEETS	SHEET NO.
		DRAWN -	REVISED -			80	(50-3)HBR-3	LASALLE	137	97
	PLOT SCALE = 100.0000 ' / in.	CHECKED -	REVISED -					CONTRACT NO. 66C59		
	PLOT DATE = 10/9/2019	DATE -	REVISED -		SCALE: SHEET OF SHEETS STA. TO STA.		ILLINOIS	FED. AID PROJECT		

ROUTE NO.	SECTION	COUNTY	TOTAL SHEETS	SHEET NO.	SHEET NO. 1
FAI 80		LA SALLE	11	9	3 SHEETS
FED. ROAD DIST. NO. 7		ILLINOIS	FED. AID PROJECT=		

Contract Number: 66758

STATE OF ILLINOIS
DEPARTMENT OF TRANSPORTATION

FOR INFORMATION ONLY

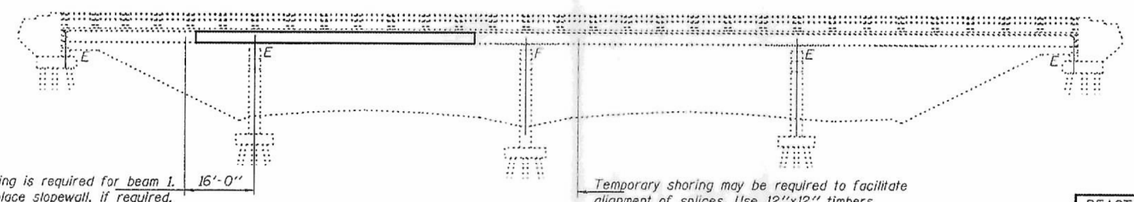

Temporary shoring is required for beam 1. Remove and replace slopewall, if required. Cost included with Temporary Shoring and Cribbing.

Temporary shoring may be required to facilitate alignment of splices. Use 12"x12" timbers or HP's to be paid for as Temporary Shoring and Cribbing. The shoring shall not be placed on the pavement or paved shoulder.

REACTION TABLE AT TEMPORARY SHORING		
℄	(k)	12.5
⅊	(k)	29.0
Imp.	(k)	8.7
Total	(k)	50.2

ELEVATION

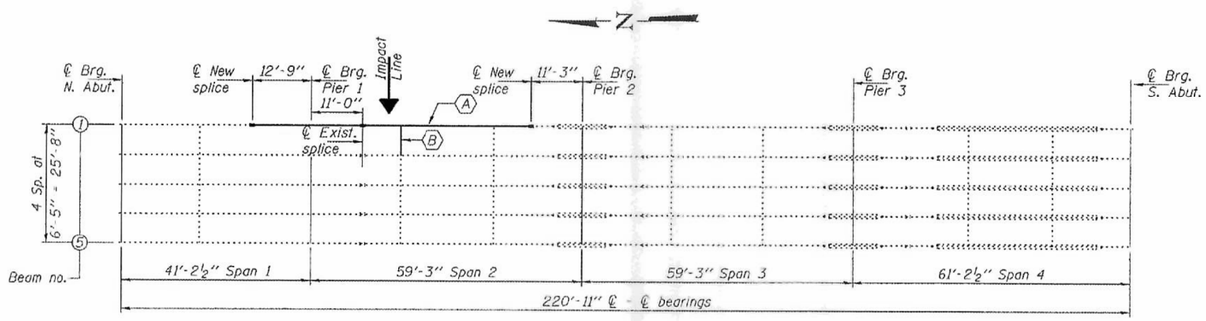

PLAN

(A) Beam replacement
(B) Diaphragm & clip L replacement

GENERAL NOTES

All structural steel shall conform to AASHTO Classification M-270 Gr. 36, unless otherwise noted.

Fasteners shall be high strength bolts. Flange splice holes shall be $^{15}/_{16}$"ϕ for $^{7}/_{8}$"ϕ bolts. Web splice holes shall be $^{13}/_{16}$"ϕ for $^{3}/_{4}$"ϕ bolts.

The Contractor shall provide support and/or shoring systems for the slab and beam in the area of existing beam removal. See Special Provisions "Temporary Shoring and Cribbing" and "Temporary Slab Support System."

After the new beam is in its final position and/or beam straightening operations have been completed, the Engineer in the field shall check to see that the top flange is tight against the slab. If not, the Contractor shall inject epoxy between the existing concrete deck and the top flange of the beam. See Special Provision "Epoxy Injection".

Prior to pouring the new concrete deck, all heavy or loose rust, loose mill scale, and other loose or potentially detrimental foreign material shall be removed from the surfaces in contact with concrete. Tightly adhered paint may remain unless otherwise noted. Removal shall be accomplished by methods that will not damage the steel and the cost will be included in the pay item covering removal of the existing concrete.

Plan dimensions and details relative to existing plans are subject to routine variations. The Contractor shall field verify existing dimensions and details affecting new construction and make necessary approved adjustments prior to construction or ordering of materials. Such variations shall not be cause for additional compensation for a change in scope of the work, however, the Contractor will be paid for the quantity actually furnished based upon the unit price bid for the work.

Cost of removal and re-installation of all members necessary to complete the work as detailed on the plans and as specified in the Special Provisions shall be included with Furnishing and Erecting Structural Steel.

The Inorganic Zinc Rich Primer / Acrylic / Acrylic Paint System shall be used for shop and field painting of new structural steel except where otherwise noted. The color of the final finish coat for all interior steel surfaces shall be gray, Munsell No. 5B 7/1. The color of the final finish coat for the exterior and bottom flange of the fascia beams shall be Interstate Green, Munsell No. 7.5G 4/8.

Existing structural steel that will be in contact with new structural steel shall be cleaned and painted prior to erection as required by the Special Provision "Cleaning and Painting Contact Surface Areas of Existing Steel Structures".

Existing reinforcement bars extending into the removal area shall be cleaned, straightened and incorporated into the new construction. Any reinforcement bars that are damaged during concrete removal shall be replaced with an approved bar splicer or anchorage system. Cost included with Concrete Removal.

Load carrying components designated "NTR" shall conform to the Supplemental Requirements for Notch Toughness, Zone 2.

Diaphragm connection holes shall be $^{15}/_{16}$"ϕ for $^{3}/_{4}$"ϕ bolts. Two hardened washers shall be required at diaphragm connections.

If the analysis submitted to the Contractor for the jacking/temporary support system to be used shows temporary stiffeners are required to prevent web crippling or buckling, the stiffeners shall be steel and bolted to the web. If stiffeners are not required, hardwood timbers shall be installed tightly between the top and bottom flange to prevent flange rotation.

TOTAL BILL OF MATERIAL

ITEM	UNIT	QUANTITY
Concrete Removal	Cu. Yd.	1.4
Concrete Superstructure	Cu. Yd.	1.4
Furnishing and Erecting Structural Steel	Pound	7350
Temporary Slab Support System	L.S.	1
Structural Steel Removal	Pound	6670
Temporary Shoring and Cribbing	L.S.	1

STATE OF ILLINOIS
RALPH E. ANDERSON
081-004625
SPRINGFIELD
LICENSED STRUCTURAL ENGINEER

DESIGNED	Andrew Fil	
CHECKED	Adrian T. Holloway	
DRAWN	baliva	
CHECKED	AJB AJH	

MARCH 3, 2008
EXAMINED — ENGINEER OF STRUCTURAL SERVICES
PASSED — ENGINEER OF BRIDGES AND STRUCTURES

Expires: November 30, 2008

PLAN AND ELEVATION
SA RD 9-D over FAI 80
LA SALLE COUNTY
SN 050-0081

FILE NAME = c:\pw_work\pwidot\calderonl\d0318968\D366c59-sht-exist-bridge-plans.dgn	USER NAME = calderonl	DESIGNED -	REVISED -
		DRAWN -	REVISED -
	PLOT SCALE = 100.0000 ' / in.	CHECKED -	REVISED -
	PLOT DATE = 10/9/2019	DATE -	REVISED -

STATE OF ILLINOIS
DEPARTMENT OF TRANSPORTATION

BEAM REPLACEMENT FOR INFORMATION ONLY

SCALE: SHEET OF SHEETS STA. TO STA.

F.A.I RTE.	SECTION	COUNTY	TOTAL SHEETS	SHEET NO.
80	(50-3)HBR-3	LASALLE	137	98
		CONTRACT NO. 66C59		
		ILLINOIS FED. AID PROJECT		

FOR INFORMATION ONLY

STATE OF ILLINOIS
DEPARTMENT OF TRANSPORTATION

ROUTE NO.	SECTION	COUNTY	TOTAL SHEETS	SHEET NO.
FAI 80		LA SALLE	11	10
FED. ROAD DIST. NO. 7		ILLINOIS	FED. AID PROJECT-	

SHEET NO. 2
3 SHEETS

Contract Number: 66758

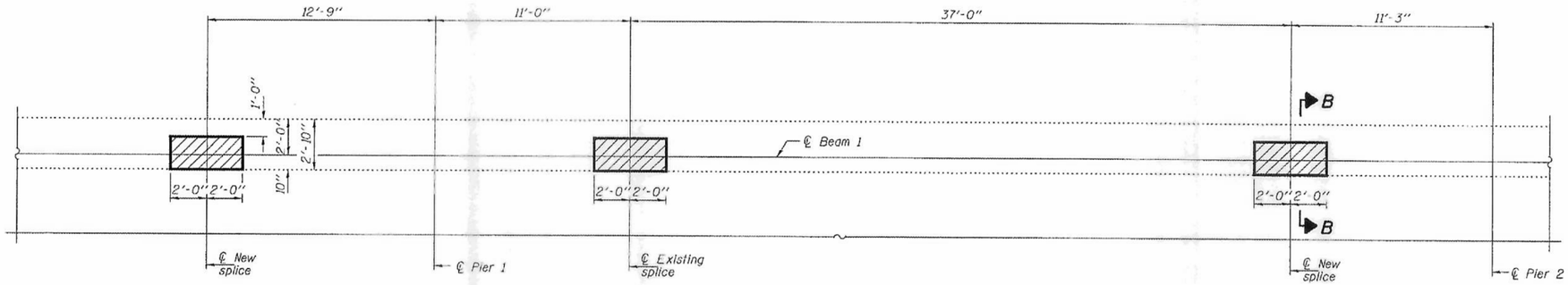

CONCRETE REMOVAL AND REPLACEMENT

Hatched areas indicate concrete sections to be removed and replaced. Perimeters of concrete removal areas shall be saw cut $\frac{3}{4}$" prior to the removal of concrete.
Reinforcement shall be cut only if required for fitting bolts. Cut reinforcement shall be spliced as directed by the Engineer. Cost shall be included with Concrete Removal.

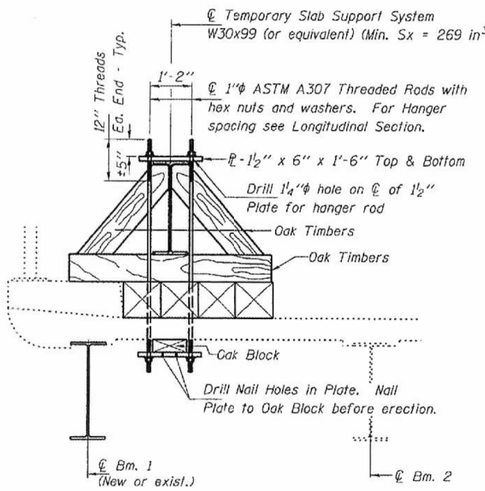

SECTION A-A

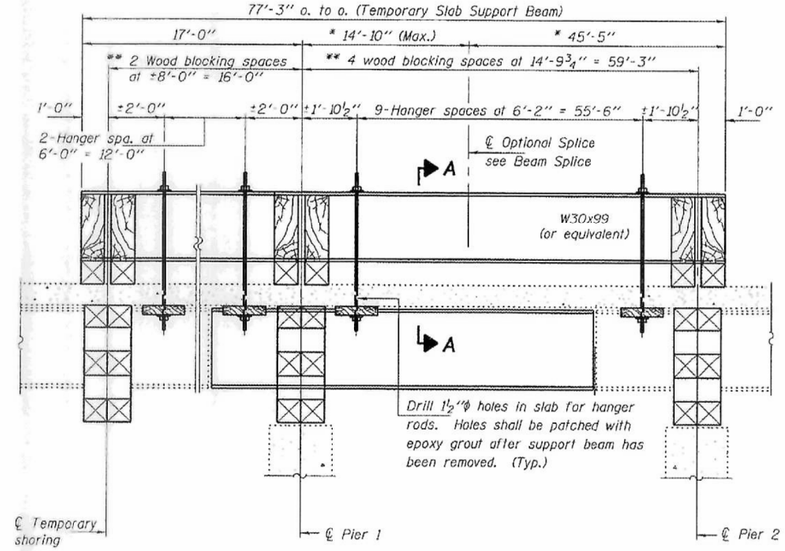

LONGITUDINAL SECTION
SUGGESTED TEMPORARY SLAB SUPPORT SYSTEM

* These dimensions may vary for available beams in stock.
** Wood blocking between piers & abutment to be placed after support beam deflects under its own weight.

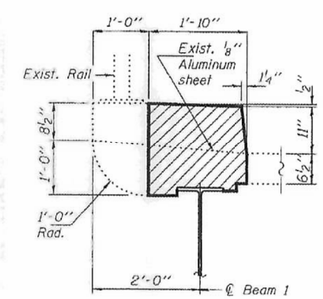

SECTION B-B

REPLACEMENT DETAILS
SA RD 9-D over FAI 80
LA SALLE COUNTY
SN 050-0081

DESIGNED	AJB	
CHECKED	ATH	
DRAWN	baliva	
CHECKED	AJB	ATH

MARCH 3, 2008
EXAMINED — ENGINEER OF STRUCTURAL SERVICES
PASSED — ENGINEER OF BRIDGES AND STRUCTURES

FILE NAME = c:\pw_work\pwidot\calderonl\d0318968\D366c59-sht-exist-bridge-plans.dgn	USER NAME = calderonl	DESIGNED -	REVISED -
		DRAWN -	REVISED -
	PLOT SCALE = 100.0000 ' / in.	CHECKED -	REVISED -
	PLOT DATE = 10/9/2019	DATE -	REVISED -

STATE OF ILLINOIS
DEPARTMENT OF TRANSPORTATION

BEAM REPLACEMENT FOR INFORMATION ONLY

SCALE: SHEET OF SHEETS STA. TO STA.

F.A.I RTE.	SECTION	COUNTY	TOTAL SHEETS	SHEET NO.
80	(50-3)HBR-3	LASALLE	137	99
		CONTRACT NO. 66C59		
		ILLINOIS FED. AID PROJECT		

FOR INFORMATION ONLY

STATE OF ILLINOIS
DEPARTMENT OF TRANSPORTATION

ROUTE NO.	SECTION	COUNTY	TOTAL SHEETS	SHEET NO.
FAI 80		LA SALLE	11	11
FED. ROAD DIST. NO. 7		ILLINOIS	FED. AID PROJECT-	

SHEET NO. 3
3 SHEETS

Contract Number: 66758

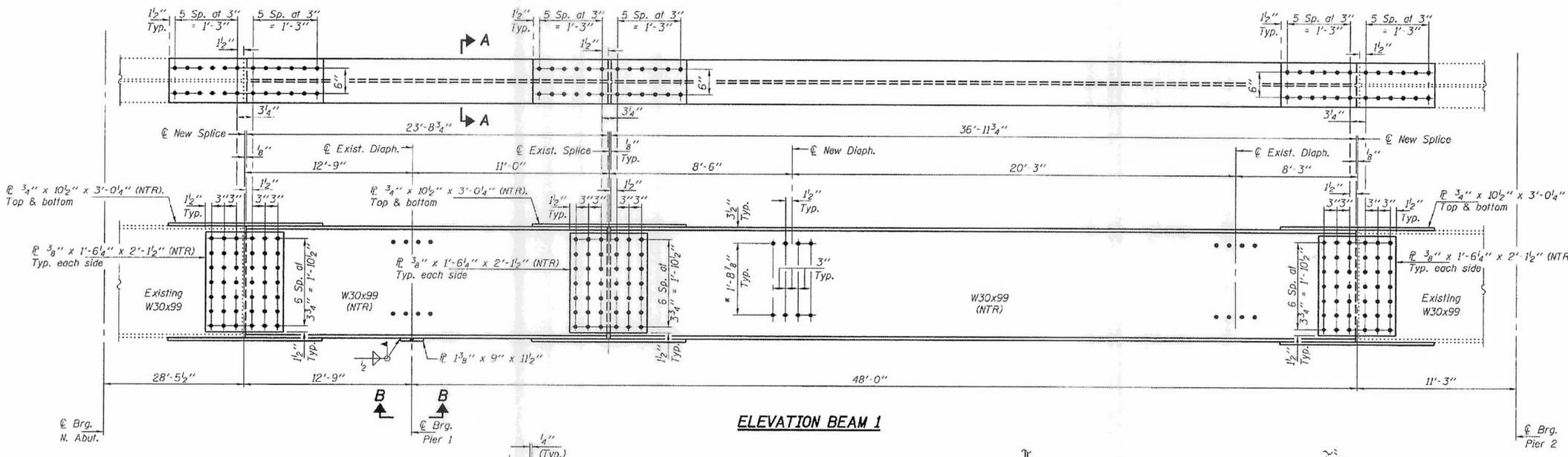

ELEVATION BEAM 1

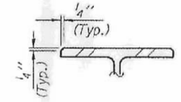

SECTION A-A

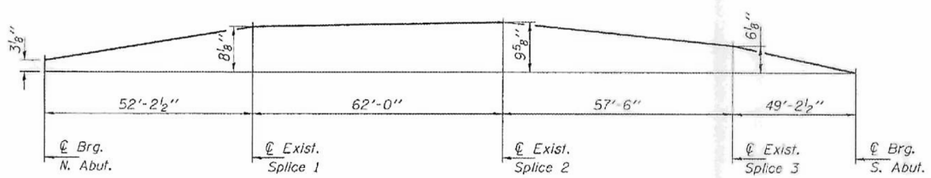

EXISTING BLOCKING DIAGRAM
FOR DRILLING OF SPLICES
(For information only)

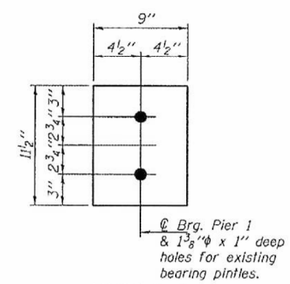

VIEW B-B

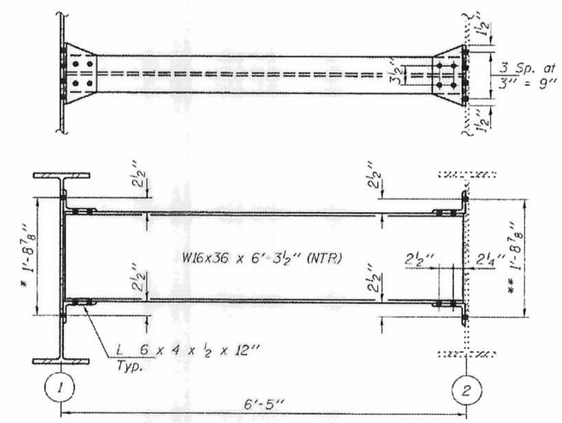

DIAPHRAGM REPLACEMENT DETAIL

Notes:
Natural camber of new beam shall be placed upward for fabrication.
Diaphragm connection holes shall be 9/16"ϕ for ¾"ϕ bolts. Two hardened washers shall be required at diaphragm connections.

* Field drill holes in new beam using holes in new and existing angles as a template.
** Field drill holes in angles using holes in web as a template.

DESIGNED	AJB
CHECKED	ATH
DRAWN	baliva
CHECKED	AJB ATH

MARCH 3, 2008
EXAMINED R. Carl Pfaffmann
ENGINEER OF STRUCTURAL SERVICES
PASSED Ralph E. Anderson
ENGINEER OF BRIDGES AND STRUCTURES

REPLACEMENT DETAILS
SA RD 9-D over FAI 80
LA SALLE COUNTY
SN 050-0081

FILE NAME = c:\pw_work\pwidot\calderonl\d0318968\D366c59-sht-exist-bridge-plans.dgn	USER NAME = calderonl	DESIGNED -	REVISED -
		DRAWN -	REVISED -
	PLOT SCALE = 100.0000 ' / in.	CHECKED -	REVISED -
	PLOT DATE = 10/9/2019	DATE -	REVISED -

STATE OF ILLINOIS
DEPARTMENT OF TRANSPORTATION

BEAM REPLACEMENT FOR INFORMATION ONLY

SCALE: SHEET OF SHEETS STA. TO STA.

F.A.I RTE.	SECTION	COUNTY	TOTAL SHEETS	SHEET NO.
80	(50-3)HBR-3	LASALLE	137	100
		CONTRACT NO. 66C59		
		ILLINOIS FED. AID PROJECT		