1-16-09 Letting, Item 003

F.A.P RTE.	SECTION	COUNTY	TOTAL SHEETS	SHEET NO.
317	(137,102)RS-4; 101RS-3	FULTON	56	1
FED. ROAD DIST. NO. 4	ILLINOIS	CONTRACT NO. 68337		

INDEX OF SHEETS:

205001–D4 406201–D4 635101–D4
280001–D4 440001–D4 667101–D4
281001–D4 601301–D4 780001–D4
406101–D4 630101–D4

STANDARDS:

001001-02	630001-08	701311-03
280001-04	701006-03	701336-05
285001-02	701011-02	701901-01
442201-03	701201-03	780001-02
542401-01	701301-03	781001-03
609001-04	701306-02	

BRIDGE OMISSIONS

STA. 74+92 TO STA. 75+54
STA. 109+78 TO STA. 110+18
STA. 318+00 TO STA. 319+90
STA. 478+33 TO STA. 479+82

ADT: 2,532
MU%: 7.9
SU%:6.1

FULL SIZE PLANS HAVE BEEN PREPARED USING STANDARD ENGINEERING SCALES. REDUCED SIZED PLANS WILL NOT CONFORM TO STANDARD SCALES. IN MAKING MEASUREMENTS ON REDUCED PLANS, THE ABOVE SCALES MAY BE USED.

J.U.L.I.E.
JOINT UTILITY LOCATION INFORMATION FOR EXCAVATION
1–800–892–0123
OR 811

PROJECT ENGINEER: MAUREEN ADDIS, (309) 671–3454
DESIGNER: LEONEL CRESPO (309) 671–3459

CONTRACT NO. 68337

STATE OF ILLINOIS
DEPARTMENT OF TRANSPORTATION
DIVISION OF HIGHWAYS

PROPOSED HIGHWAY PLANS

FAP ROUTE 317
SECTION: (137,102) RS–4; 101 RS–3
FULTON COUNTY
C–94–033–03
PROJECT F-0317(078)

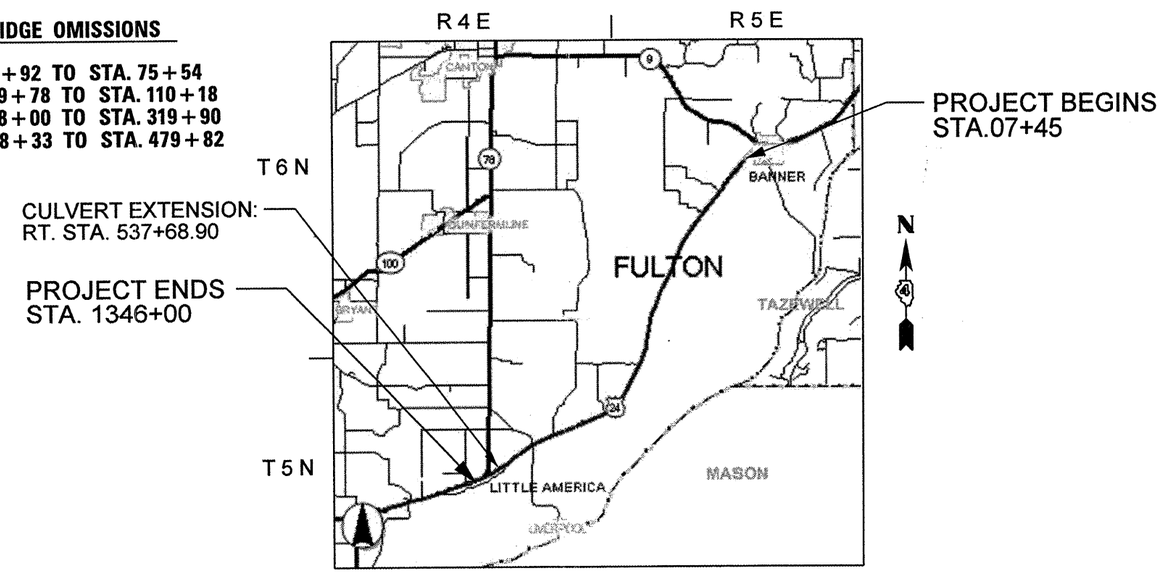

GROSS LENGTH = 54,305.31 FT. = 10.285 MILE
NET LENGTH = 53,864.31 FT. = 10.202 MILE

STATION EQUATIONS:

STA. 269+01.41 (BK) = 269+09.00 (AH)
STA. 386+10.55(BK) = 385+82.67 (AH)
STA. 541+48.96 (BK) = 1336+89.96 (AH)

D–94–031–03

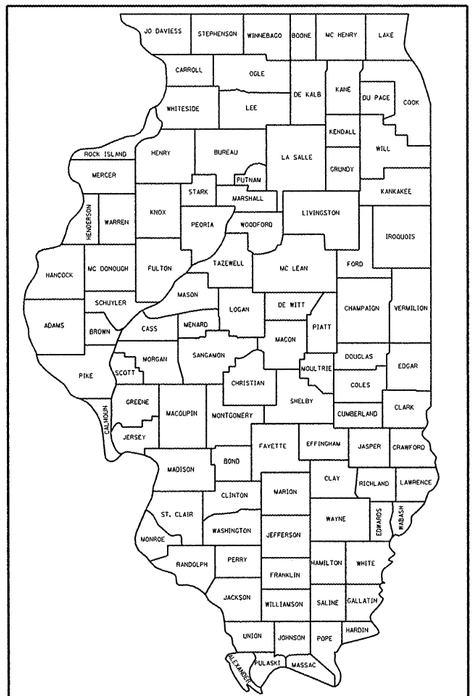

LOCATION OF SECTION INDICATED THUS:–

DESCRIPTION OF WORK

Project consists of patching, culvert extension, resurfacing of US 24 from Banner to Little America.

STATE OF ILLINOIS
DEPARTMENT OF TRANSPORTATION
DIVISION OF HIGHWAYS

SUBMITTED 10/15/ 2008
DEPUTY DIRECTOR OF HIGHWAYS, REGION ENGINEER
December 5, 2008
Eric E. Harm
Interim ENGINEER OF DESIGN AND ENVIRONMENT
December 5, 2008
Christine M. Reed
DIRECTOR OF HIGHWAYS, CHIEF ENGINEER

PRINTED BY THE AUTHORITY OF THE STATE OF ILLINOIS

COMMITMENTS

Commitments are not to be altered without the written approval of all parties to which the commitment was made.

No Commitments have been made on this project.

DESIGN CRITERIA

This project was designed in accordance with S.M.A.R.T. policies procedures, and guidelines.

GENERAL NOTES

Environmental Reviews

Prior to the use of any proposed borrow areas, use areas (temporary access roads, detours, run-arounds, etc.), and/or waste areas, the Contractor shall file the required environmental resource request surveys according to Section 107.22 of the Standard Specifications. These surveys are required in order for the Department to conduct cultural and biological resource surveys for the proposed site. Prior to any waste materials being removed from the construction site, the required environmental resource surveys will need to be obtained and filed by the Contactor. Excess waste products removed from the constuction site shall be disposed of as required in Section 202.03 of the Standard Specifications. Any protruding metal bars shall be removed prior to the diposal of broken concrete at approved disposal sites.The required environmental resource documentation shall include the following:

* BDE Form 2289 (Environmental Survey Request)
* A location map showing the size limits and location of the use area
* Signed property owner agreement form
* Color photographs depicting the use area

Please note that a minimum of two weeks shall be allowed for the District to obtain the required environmental clearances.

Permanent Survey Markers

Contractor shall notify the Resident Engineer two weeks prior to any hot-mix asphalt surface removal to allow sufficent time to locate existing survey markers.

Layout for permenant survey markers shall be included in the cost of Permanent survey markers pay item.

Hot-Mix Asphalt Shoulders

Top lift of new shoulders shall be paved monlithically with the mainline surface.

Aggregate Shoulders, Type B

Aggregate Shoulders, Type B shall be required for all granular construction of side roads, entrances, and mailbox turnouts, whether or not portions of the surfaces thus constructed are to be covered with a hot-mix surface, except where noted differently on the plans.

Paving Surface Course

Continuous paving operations on the main roadway shall be maintained at all times during the construction of the hot-mix surface. No interruptions for side roads, entrances, turn lanes, etc. will be allowed.

Butt Joint Cutting Time Restriction

Butt Joints shall not be milled more than three (3) days prior to placement of the hot-mix surface course.

The removal of Hot-Mix bituminous surface (3/4" to 1 1/2") along the bituminous shoulders will be paid for as Hot-Mix Surface removal (variable depth).

HOT-MIX ASPHALT MIXTURE REQUIREMENTS

The following mixture requirements are applicable for this project:

MIXTURE USE(S)	SURFACE COURSE	HOT-MIX ASPHALT SHOULDERS , 1½" (If not paved monolithic with mainline)	POLYMERIZED LEVELING BINDER
AC/PG:	PG 64-22	PG 64-22	SBS OR SBR 70-22
RAP% (MAX):	15%	30%	0%
DESIGN AIR VOIDS:	4.0% @ N=50	3.0% @ N=30	2.5% @ N=50
MIXTURE COMPOSITION:	IL 9.5 OR IL 12.5	IL 9.5 L	IL 4.75
FRICTION AGGREGATE:	MIXTURE D (DOLOMITE ONLY)	MIXTURE C	N/A

MIXTURE USE(S)	INCIDENTAL HOT-MIX ASPHALT SURFACING	CLASS D PATCH	HOT-MIX ASPHALT SHOULDERS, 8" (Lower Lifts)
AC/PG:	PG 64-22	PG 64-22	PG 64-22
RAP% (MAX):	15%	25%	30%
DESIGN AIR VOIDS:	4.0% @ N=50	4.0% @ N=50	4.0% @ N=30
MIXTURE COMPOSITION:	IL 9.5 OR IL 12.5	IL 19.0	IL 19.0 L
FRICTION AGGREGATE:	MIXTURE D (DOLOMITE)	N/A	MIXTURE C

SIDEROADS

Milling and Resurfacing limits need to be verified by the Resident Engineer prior to each operation.

Pavement Station Numbers & Placement

The Contractor shall provide labor and materials required to imprint pavement station numbers in the finished surface of the pavement and/or overlay. The numbers shall be approximately 3/4 inches wide, 5 inches high, and 5/8 inches deep. The pavement station numbers shall be installed as specified herein:

Interval - 200 feet
Bottom of Numbers - 6 inches from the inside edge of the pavement marking
Location:

- 2, 3, & 5 Lane Pavements - right edge of pavement in direction of increasing stations
- Multi-lane Divided Roadways - outside edge of pavement in both directions
- Ramps - along baseline edge of pavement
- Position - stations shall be placed so they can be read from the adjacent shoulder

Format - pavement stations shall use this format XXX + XX, where X represents the pavement station This work will not be paid separately, but will be considered included in the cost of the associated pavement and/or overlay pay items.

SUMMARY OF QUANTITIES

CODE NO.	ITEM	UNIT	T. QUANTITY	CONSTRUCTION TYPE CODE 80% FED 20% STATE I000
20100500	TREE REMOVAL, ACRES	ACRE	0.28	0.28
20200100	EARTH EXCAVATION	CU YD	256	256
20201200	REMOVAL AND DISPOSAL OF UNSUITABLE MATERIAL	CU YD	42	42
20400800	FURNISHED EXCAVATION	CU YD	415	415
20700220	POROUS GRANULAR EMBANKMENT	CU YD	4	4
21001000	GEOTECHNICAL FABRIC FOR GROUND STABILIZATION	SQ YD	22	22
21101615	TOPSOIL FURNISH AND PLACE, 4"	SQ YD	796	796
* 25000300	SEEDING, CLASS 3	ACRE	0.25	0.25
* 25000400	NITROGEN FERTILIZER NUTRIENT	POUND	23	23
* 25000500	PHOSPHORUS FERTILIZER NUTRIENT	POUND	23	23
* 25000600	POTASSIUM FERTILIZER NUTRIENT	POUND	23	23
25100635	HEAVY DUTY EROSION CONTROL BLANKET	SQ YD	796	796
28000300	TEMPORARY DITCH CHECKS	EACH	8	8
28000400	PERIMETER EROSION BARRIER	FOOT	60	60
28100207	STONE RIPRAP, CLASS A4	TON	6.5	6.5
28200200	FILTER FABRIC	SQ YD	8.5	8.5

SUMMARY OF QUANTITIES

CODE NO.	ITEM	UNIT	T. QUANTITY	CONSTRUCTION TYPE CODE 80% FED 20% STATE I000
28500100	FABRIC FORMED CONCRETE REVETMENT MAT	SQ YD	441	441
35800100	PREPARATION OF BASE	SQ YD	44	44
35800200	AGGREGATE BASE REPAIR	TON	20	20
40600215	POLYMERIZED BITUMINOUS MATERIAL (PRIME COAT)	TON	91	91
40600300	AGGREGATE (PRIME COAT)	TON	549	549
40600895	CONSTRUCTING TEST STRIP	EACH	2	2
40600982	HOT-MIX SURFACE REMOVAL - BUTT JOINT	SQ YD	2,052	2,052
40600990	TEMPORARY RAMP	SQ YD	422	422
40603335	HOT-MIX ASPHALT SURFACE COURSE, MIX "D", N50	TON	13234	13234
40800050	INCIDENTAL HOT-MIX ASPHALT SURFACING	TON	291	291
44000152	HOT-MIX ASPHALT SURFACE REMOVAL, 3/4"	SQ YD	158, 157	158,157
44000198	HOT-MIX ASPHALT SURFACE REMOVAL, VARIABLE DEPTH	SQ YD	6471	6471
44000300	CURB REMOVAL	FOOT	215	215
44004250	PAVED SHOULDER REMOVAL	SQ YD	130	130
44201789	CLASS D PATCHES, TYPE II, 12 INCH	SQ YD	957	957
44201794	CLASS D PATCHES, TYPE III, 12 INCH	SQ YD	69	69

* SPECIALTY ITEM

SUMMARY OF QUANTITIES			CONSTRUCTION TYPE CODE 80% FED 20% STATE	
CODE NO.		UNIT	T. QUANTITY	I000
44201796	CLASS D PATCHES, TYPE IV, 12 INCH	SQ YD	144	144
48101200	AGGREGATE SHOULDERS, TYPE B	TON	2,755	2,755
48203029	HOT-MIX ASPHALT SHOULDERS, 8"	SQ YD	120	120
48203100	HOT-MIX ASPHALT SHOULDERS	TON	3,052	3,052
50102400	CONCRETE REMOVAL	CU YD	1.4	1.4
50800105	REINFORCEMENT BARS	POUND	1,508	1,508
54002020	EXPANSION BOLTS 3/4 INCH	EACH	12	12
54003000	CONCRETE BOX CULVERTS	CU YD	10	10
54215547	METAL END SECTIONS 12"	EACH	2	2
54248510	CONCRETE COLLAR	CU YD	0.5	0.5
60100945	PIPE DRAINS 12"	FOOT	60	60
60900230	TYPE C INLET BOX, STANDARD 609001 (SPECIAL)	EACH	2	2
60900515	CONCRETE THRUST BLOCKS	EACH	2	2
* 63000000	STEEL PLATE BEAM GUARD RAIL, TYPE A	FOOT	462.5	462.5
* 63100167	TRAFFIC BARRIER TERMINAL, TYPE 1 (SPECIAL) TANGENT	EACH	3	3
63200310	GUARDRAIL REMOVAL	FOOT	262.5	262.5

SUMMARY OF QUANTITIES			CONSTRUCTION TYPE CODE 80% FED 20% STATE	
CODE NO.	ITEM	UNIT	T. QUANTITY	I000
63304385	TRAFFIC BARRIER TERMINAL REMOVAL, TYPE 1	EACH	5	5
Z0020800	EROSION CONTROL CURB	FOOT	215	215
66700205	PERMANENT SURVEY MARKERS, TYPE I	EACH	44	44
67000400	ENGINEER'S FIELD OFFICE, TYPE A	CAL MO	4	4
67100100	MOBILIZATION	L SUM	1	1
70100450	TRAFFIC CONTROL AND PROTECTION, STANDARD 701201	L SUM	1	1
70100460	TRAFFIC CONTROL AND PROTECTION, STANDARD 701306	L SUM	1	1
70100600	TRAFFIC CONTROL AND PROTECTION, STANDARD 701336	L SUM	1	1
70300100	SHORT- TERM PAVEMENT MARKING	FOOT	16,298	16,298
70300220	TEMPORARY PAVEMENT MARKING - LINE 4"	FOOT	154,835	154,835
70300250	TEMPORARY PAVEMENT MARKING - LINE 8"	FOOT	495	495
70300260	TEMPORARY PAVEMENT MARKING - LINE 12"	FOOT	320	320
70300280	TEMPORARY PAVEMENT MARKING - LINE 24"	FOOT	20	20
70301000	WORK ZONE PAVEMENT MARKING REMOVAL	SQ FT	5,433	5,433
* 78001110	PAINT PAVEMENT MARKING - LINE 4"	FOOT	154,835	154,835
* 78001140	PAINT PAVEMENT MARKING - LINE 8"	FOOT	495	495

* SPECIALTY ITEM

FILE NAME = ©FILEL©	USER NAME = ©USER©	DESIGNED - ___	REVISED - ___
		DRAWN - ___	REVISED - ___
	PLOT SCALE = ©SCALE©	CHECKED - ___	REVISED - ___
	PLOT DATE = ©DATE©	DATE - _____	REVISED - ___

STATE OF ILLINOIS
DEPARTMENT OF TRANSPORTATION

SUMMARY OF QUANTITIES

SCALE: _____ | SHEET NO. __ OF ___ SHEETS | STA. _____ TO STA. _____

F.A.P 317	SECTION	COUNTY	TOTAL SHEETS	SHEET NO.
US24	(137,102)RS-4; 101RS-3	FULTON	____	4

CONTRACT NO. 68337

FED. ROAD DIST. NO. _ | ILLINOIS | FED. AID PROJECT

	SUMMARY OF QUANTITIES			CONSTRUCTION TYPE CODE 80% FED 20% STATE	
	CODE NO.		UNIT	T. QUANTITY	I000
*	78001150	PAINT PAVEMENT MARKING - LINE 12"	FOOT	320	320
*	78001180	PAINT PAVEMENT MARKING - LINE 24"	FOOT	20	20
*	78100100	RAISED REFLECTIVE PAVEMENT MARKER	EACH	675	675
*	78200410	GUARDRAIL MARKERS, TYPE A	EACH	11	11
*	78201000	TERMINAL MARKER - DIRECT APPLIED	EACH	3	3
	78300200	RAISED REFLECTIVE PAVEMENT MARKER REMOVAL	EACH	625	625
	X0301512	GUARDRAIL AGGREGATE EROSION CONTROL	TON	109	109
	X0321475	PIPE ELBOW, 12"	EACH	4	4
	X0322584	REVETMENT MAT REMOVAL	SQ YD	156	156
	X0323586	PIPE DRAIN REMOVAL	FOOT	22	22
	X4067107	POLYMERIZED LEVELING BINDER (MACHINE METHOD), IL-4.75, N50	TON	6,617	6,617
	Z0054500	ROCK FILL	TON	11	11
	Z0055600	RUMBLE STRIP	SQ YD	72	72

* SPECIALTY ITEM

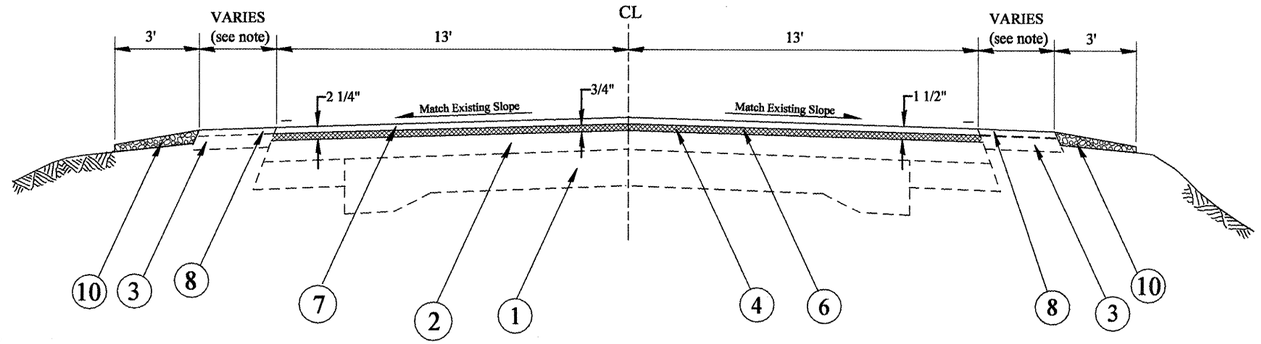

NOTE:

Left and right hot-mix asphalt shoulder dimensions are 5' and 2', respectively, except segments indicated by the following:

* LT 2' and RT 3'
** LT 8' and RT 8'
*** LT 2' and RT 0'

STA. 7+45 TO 8+95*
STA. 40+00 TO 45+00
STA. 107+00 TO 109+78**
STA. 171+00 TO 175+50
STA. 396+00 TO 397+50
STA. 432+50 TO 433+10

STA. 434+50 TO 435+35
STA. 450+00 TO 454+00
STA. 460+00 TO 464+00
STA. 509+50 TO 515+95
STA. 1342+78 TO 1346+00***

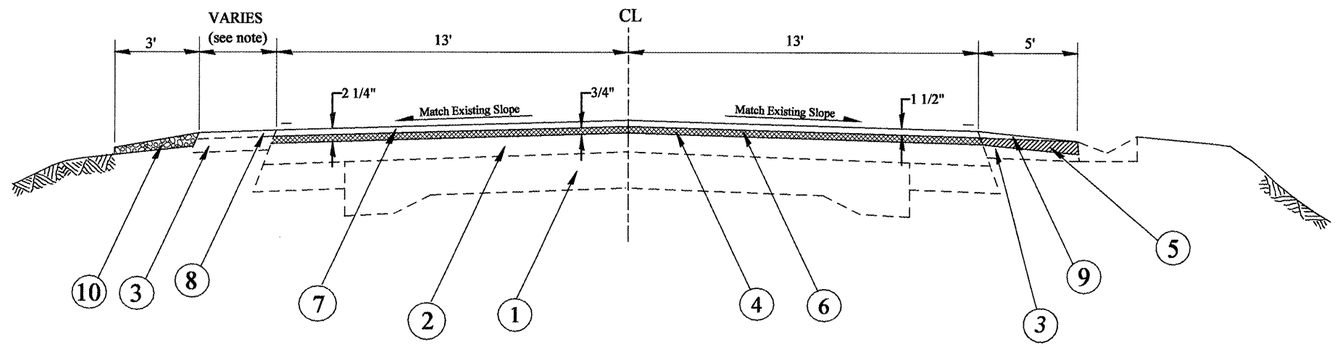

NOTE:

Left hot-mix asphalt shoulder width is 2' except segments denoted by *, where it is 5'

STA. 51+00 TO 54+00
STA. 56+50 TO 60+00*
STA. 65+00 TO 65+50*
STA. 65+50 TO 70+00
STA. 76+55 TO 78+00*
STA. 78+00 TO 79+44
STA. 84+00 TO 85+00
STA. 85+85 TO 90+00
STA. 154+50 TO 156+50*
STA 156+50 TO 159+50
STA. 160+50 TO 162+50
STA. 195+50 TO 201+00
STA. 202+75 TO 206+50
STA. 212+50 TO 215+98
STA. 216+55 TO 219+35
STA. 219+92 TO 222+09

STA. 154+50 TO 156+50*
STA. 222+43 TO 226+50
STA. 228+50 TO 230+50
STA. 231+75 TO 235+00
STA. 236+00 TO 239+00
STA. 239+00 TO 240+00*
STA. 245+00 TO 249+00
STA. 249+00 TO 251+00*
STA. 252+25 TO 253+75*
STA. 255+00 TO 258+75
STA. 277+00 TO 280+50
STA. 362+00 TO 374+50*
STA. 381+00 TO 383+50*
STA. 383+50 TO 393+50
STA. 393+50 TO 394+00*
STA. 524+00 TO 528+20*

STA. 528+54 TO 532+37*
STA. 532+59 TO 536+00
STA. 1338+50 TO 1342+78

STA. EQ. 386+10.55 (BK) = 385+82.67 (AH)

LEGEND

1. EXISTING PAVEMENT (9,6,9)
2. EXISTING HOT-MIX ASPHALT OVERLAY
3. EXISTING HOT-MIX ASPHALT SHOULDER
4. PROPOSED HOT-MIX ASPHALT SURFACE REMOVAL, 3/4"
5. PROPOSED HOT-MIX ASPHALT SURFACE REMOVAL VAR. DEPTH (3/4" to 1 1/2")
6. PROPOSED POLY. LEVELING BINDER (MACHINE METHOD) N50, 3/4"
7. PROPOSED HOT-MIX ASPHALT SURFACE CSE, MIX D, N50, 1 1/2"
8. PROPOSED HOT-MIX ASPHALT SHOULDERS, 1 1/2"
9. PROPOSED HOT-MIX ASPHALT SHOULDERS, VAR. DEPTH
10. PROPOSED AGGREGATE SHOULDER TY B, WEDGE

FILE NAME = S:\GEN\DRAFT\STD&PLNS\SQUAD11\68337\68337A\plans.dgn	USER NAME = brucebm	DESIGNED -	REVISED -	STATE OF ILLINOIS DEPARTMENT OF TRANSPORTATION	TYPICAL SECTIONS	F.A.P 317	SECTION	COUNTY	TOTAL SHEETS	SHEET NO.
		DRAWN -	REVISED -			US24	(137,102)RS-4; 101RS-3	FULTON	56	6
	PLOT SCALE = 44.2009 ' / IN.	CHECKED -	REVISED -					CONTRACT NO. 68337		
	PLOT DATE = 10/14/2008	DATE -	REVISED -		SCALE: SHEET NO. OF SHEETS STA. TO STA.	FED. ROAD DIST. NO.	ILLINOIS	FED. AID PROJECT		

STA. 50+50 TO 51+00
STA. 54+00 TO 54+50
STA. 70+00 TO 73+00
STA. 79+44 TO 84+00
STA. 85+00 TO 85+85
STA. 90+00 TO 90+50
STA. 159+50 TO 160+50
STA. 162+50 TO 163+00
STA. 201+00 TO 202+75
STA. 212+00 TO 212+50
STA. 215+98 TO 216+55

STA. 219+35 TO 219+92
STA. 222+09 TO 222+43
STA. 226+50 TO 228+50
STA. 230+50 TO 231+75
STA. 235+00 TO 236+00
STA. 242+00 TO 245+00
STA. 254+00 TO 255+00
STA. 258+75 TO 259+50
STA. 276+50 TO 277+00
STA. 280+50 TO 281+00
STA. 500+00 TO 504+50

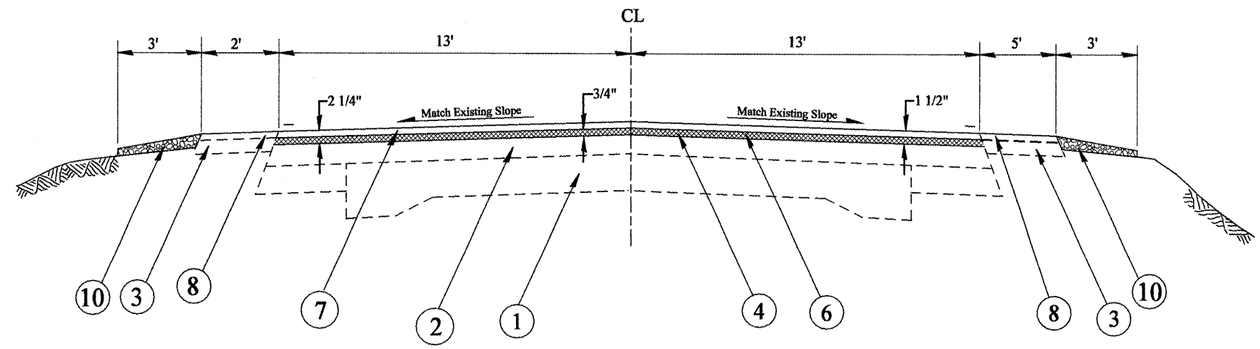

STA. 26+50 TO 32+00
STA. 54+50 TO 56+50
STA. 60+00 TO 65+00
STA. 73+00 TO 74+92
STA. 75+54 TO 76+55
STA. 90+50 TO 95+50
STA. 110+18 TO 113+00
STA. 129+00 TO 135+50
STA. 152+00 TO 154+50
STA. 240+00 TO 242+00
STA. 251+00 TO 252+25
STA. 253+75 TO 254+00

STA. 316+00 TO 318+00
STA. 319+90 TO 321+00
STA. 361+50 TO 362+00
STA. 374+50 TO 381+00
STA. 394+00 TO 396+00
STA. 433+10 TO 434+50
STA. 476+50 TO 478+33
STA. 479+82 TO 482+50
STA. 515+95 TO 524+00
STA. 528+20 TO 528+54
STA. 532+37 TO 1338+50

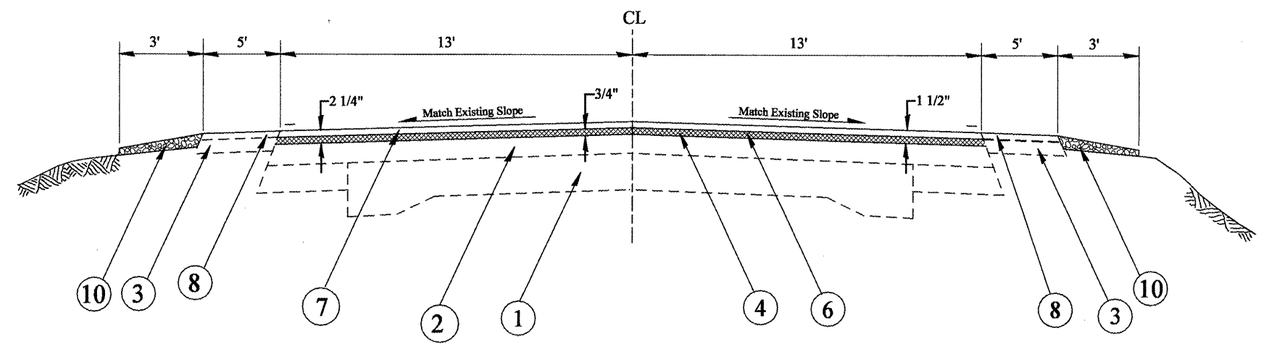

STA. EQ. 541+48.96 (BK) = 1336+89.96 (AH)

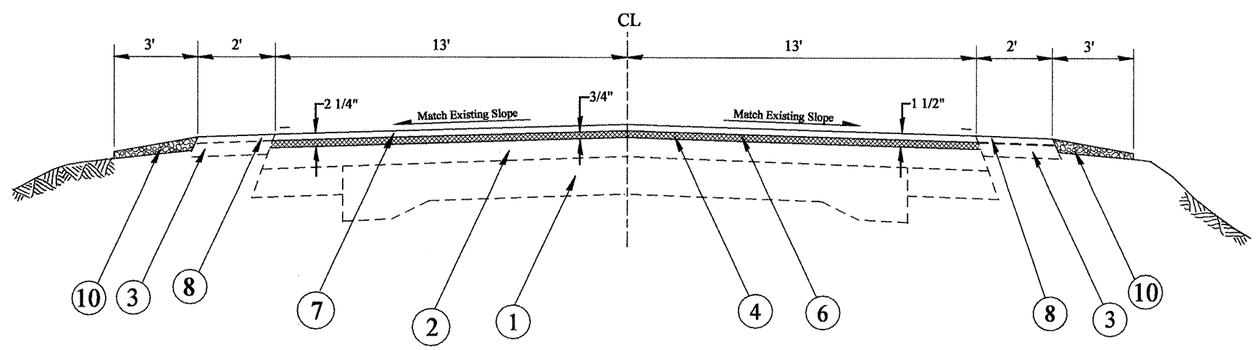

LEGEND

1. EXISTING PAVEMENT (9,6,9)
2. EXISTING HOT-MIX ASPHALT OVERLAY
3. EXISTING HOT-MIX ASPHALT SHOULDER
4. PROPOSED HOT-MIX ASPHALT SURFACE REMOVAL, 3/4"
5. PROPOSED HOT-MIX ASPHALT SURFACE REMOVAL VAR. DEPTH (3/4" to 1 1/2")
6. PROPOSED POLY. LEVELING BINDER (MACHINE METHOD) N50, 3/4"
7. PROPOSED HOT-MIX ASPHALT SURFACE CSE, MIX D, N50, 1 1/2"
8. PROPOSED HOT-MIX ASPHALT SHOULDERS, 1 1/2"
9. PROPOSED HOT-MIX ASPHALT SHOULDERS, VAR. DEPTH
10. PROPOSED AGGREGATE SHOULDER TY B, WEDGE

STA. 8+95 TO 26+50
STA. 32+00 TO 40+00
STA. 45+00 TO 50+50
STA. 95+50 TO 107+00
STA. 113+00 TO 129+00

STA. 135+50 TO 152+00
STA. 163+00 TO 171+00
STA. 175+50 TO 195+50
STA. 206+50 TO 212+00
STA. 259+50 TO 276+50

STA. 281+00 TO 316+00
STA. 321+00 TO 361+50
STA. 397+50 TO 432+50
STA. 435+35 TO 450+00
STA. 454+00 TO 460+00

STA. 464+00 TO 476+50
STA. 482+50 TO 500+00
STA. 504+50 TO 509+50

STA. EQ. 269+01.41 (BK) = 269+09.00 (AH)

FILE NAME = S:\GEN\DRAFT\STD&PLNS\SQUAD11\68337\68337A\plans.dgn	USER NAME = brucebm	DESIGNED -	REVISED -
		DRAWN -	REVISED -
	PLOT SCALE = 44.2029 ' / IN.	CHECKED -	REVISED -
	PLOT DATE = 10/14/2008	DATE -	REVISED -

STATE OF ILLINOIS
DEPARTMENT OF TRANSPORTATION

TYPICAL SECTIONS

SCALE: | SHEET NO. OF SHEETS | STA. TO STA.

F.A.P 317	SECTION	COUNTY	TOTAL SHEETS	SHEET NO.
US24	(137,102)RS-4; 101RS-3	FULTON	56	7
		CONTRACT NO. 68337		

FED. ROAD DIST. NO. | ILLINOIS | FED. AID PROJECT

TABULATION OF RESURFACING QUANTITIES

LOCATION	TOTAL ROADWAY WIDTH	LENGTH	AREA	HOT-MIX SURFACE REMOVAL BUTT JOINT	TEMPORARY RAMP	HOT-MIX ASPH.SURF. REMOVAL 0.75 IN	HOT-MIX ASPH.SURF. REMOVAL VAR. DEPTH	POLY. BIT. MATERIALS PRIME COAT	AGGREGATE MATERIALS PRIME COAT	POLYMERIZED LEVELING BINDER (MM) 0.75 IN	HOT-MIX ASPHALT SURF CSE MIX D N50 1.5 IN	INCIDENTAL HOT-MIX ASPH SURF	HOT-MIX ASPHALT SHOULDERS		AGGREGATE SHOULDERS TYPE B	
													LEFT SIDE	RIGHT SIDE	LEFT SIDE	RIGHT SIDE
	FT	FT	SQ YD	SQ YD	SQ YD	SQ YD	SQ YD	TON	TON	TON	TON	TON	TON	TON	TON	TON
STA. 7 + 45 TO 8 + 95	26.00	150.00	433.33	103.33	17.22	433.33		0.24	1.47	18.20	36.40		2.80	4.20	4.27	
STA. 8 + 95 TO 26 + 50	26.00	1755.00	5070.00			5070.00		2.79	16.77	212.94	425.88		32.76	32.76	49.97	49.97
STA. 26 + 50 TO 32 + 00	26.00	550.00	1588.89			1588.89		0.95	5.99	66.73	133.47		25.67	25.67	15.66	15.66
STA. 32 + 00 TO 40 + 00	26.00	800.00	2311.11			2311.11		1.27	7.64	97.07	194.13		14.93	14.93	22.78	22.78
STA. 40 + 00 TO 45 + 00	26.00	500.00	1444.44			1444.44		0.83	5.11	60.67	121.33		23.33	9.33	14.24	14.24
STA. 45 + 00 TO 50 + 50	26.00	550.00	1588.89			1588.89		0.88	5.26	66.73	133.47		10.27	10.27	15.66	15.66
STA. 50 + 50 TO 51 + 00	26.00	50.00	144.44			144.44		0.08	0.51	6.07	12.13		0.93	2.33	1.42	1.42
STA. 51 + 00 TO 54 + 00	26.00	300.00	866.67			866.67	166.67	0.53	3.07	36.40	72.80		5.60	14.00	8.54	
STA. 54 + 00 TO 54 + 50	26.00	50.00	144.44			144.44		0.08	0.51	6.07	12.13		0.93	2.33	1.42	1.42
STA. 54 + 50 TO 56 + 50	26.00	200.00	577.78			577.78		0.34	2.18	24.27	48.53		9.33	9.33	5.69	5.69
STA. 56 + 50 TO 60 + 00	26.00	350.00	1011.11			1011.11	194.44	0.64	3.81	42.47	84.93		16.33	16.33	9.97	
STA. 60 + 00 TO 61 + 00	26.00	100.00	288.89			288.89		0.17	1.09	12.13	24.27		4.67	4.67	2.85	2.85
STA. 61 + 00 TO 65 + 00	26.00	400.00	1155.56			1155.56		0.69	4.36	48.53	97.07		18.67	18.67	11.39	11.39
STA. 65 + 00 TO 65 + 50	26.00	50.00	144.44			144.44	27.78	0.09	0.54	6.07	12.13		2.33	2.33	1.42	
STA. 65 + 50 TO 70 + 00	26.00	450.00	1300.00			1300.00	250.00	0.80	4.60	54.60	109.20		8.40	21.00	12.81	
STA. 70 + 00 TO 73 + 00	26.00	300.00	866.67			866.67		0.50	3.07	36.40	72.80		5.60	14.00	8.54	8.54
STA. 73 + 00 TO 74 + 92	26.00	192.00	554.67	120.00	20.00	554.67		0.33	2.09	23.30	46.59		8.96	8.96	5.47	5.47
BRIDGE OMISSION																
STA. 75 + 54 TO 76 + 55	26.00	101.00	291.78	120.00	20.00	291.78		0.17	1.10	12.25	24.51		4.71	4.71	2.88	2.88
STA. 76 + 55 TO 78 + 00	26.00	145.00	418.89			418.89	80.56	0.27	1.58	17.59	35.19		6.77	6.77	4.13	
STA. 78 + 00 TO 79 + 44	26.00	144.00	416.00			416.00	80.00	0.25	1.47	17.47	34.94		2.69	6.72	4.10	
STA. 79 + 44 TO 84 + 00	26.00	456.00	1317.33			1317.33		0.76	4.66	55.33	110.66		8.51	21.28	12.98	12.98
STA. 84 + 00 TO 84 + 50	26.00	50.00	144.44			144.44	27.78	0.09	0.51	6.07	12.13		0.93	2.33	1.42	
STA. 84 + 50 TO 85 + 00	26.00	50.00	144.44			144.44	27.78	0.09	0.51	6.07	12.13		0.93	2.33	1.42	
STA. 85 + 00 TO 85 + 85	26.00	85.00	245.56			245.56		0.14	0.87	10.31	20.63		1.59	3.97	2.42	2.42
STA. 85 + 85 TO 90 + 00	26.00	415.00	1198.89			1198.89	230.56	0.73	4.24	50.35	100.71		7.75	19.37	11.82	
STA. 90 + 00 TO 90 + 50	26.00	50.00	144.44			144.44		0.08	0.51	6.07	12.13		0.93	2.33	1.42	1.42
STA. 90 + 50 TO 95 + 50	26.00	500.00	1444.44			1444.44		0.86	5.44	60.67	121.33		23.33	23.33	14.24	14.24
STA. 95 + 50 TO 107 + 00	26.00	1150.00	3322.22			3322.22		1.83	10.99	139.53	279.07		21.47	21.47	32.74	32.74
STA. 107 + 00 TO 109 + 78	26.00	278.00	803.11	120.00	20.00	803.11		0.52	3.40	33.73	67.46		20.76	20.76	7.92	7.92
BRIDGE OMISSION																
STA. 110 + 18 TO 113 + 00	26.00	282.00	814.67	120.00	20.00	814.67		0.49	3.07	34.22	68.43		13.16	13.16	8.03	8.03
STA. 113 + 00 TO 129 + 00	26.00	1600.00	4622.22			4622.22		2.55	15.29	194.13	388.27		29.87	29.87	45.56	45.56
STA. 129 + 00 TO 135 + 50	26.00	650.00	1877.78			1877.78		1.12	7.08	78.87	157.73		30.33	30.33	18.51	18.51
STA. 135 + 50 TO 152 + 00	26.00	1650.00	4766.67			4766.67		2.63	15.77	200.20	400.40		30.80	30.80	46.98	46.98
STA. 152 + 00 TO 154 + 50	26.00	250.00	722.22			722.22		0.43	2.72	30.33	60.67		11.67	11.67	7.12	7.12
STA. 154 + 50 TO 156 + 50	26.00	200.00	577.78			577.78	111.11	0.37	2.18	24.27	48.53		9.33	9.33	5.69	
STA. 156 + 50 TO 159 + 50	26.00	300.00	866.67			866.67	166.67	0.54	3.07	36.40	72.80		5.60	14.00	8.54	
STA. 159 + 50 TO 160 + 50	26.00	100.00	288.89			288.89		0.17	1.02	12.13	24.27		1.87	4.67	2.85	2.85
STA. 160 + 50 TO 162 + 50	26.00	200.00	577.78			577.78	111.11	0.35	2.04	24.27	48.53		3.73	9.33	5.69	
SUB-TOTAL				**583**	**97**	**44,498**	**1,474**	**26**	**156**	**1,869**	**3,738**		**428**	**500**	**439**	**359**

TABULATION OF RESURFACING QUANTITIES

LOCATION	TOTAL ROADWAY WIDTH	LENGTH	AREA	HOT-MIX ASPH. SURF. REMOVAL BUTT JOINT	TEMPORARY RAMP	HOT-MIX ASPH. SURF. REMOVAL 0.75 IN	HOT-MIX ASPH. SURF. REMOVAL VAR. DEPTH	POLY. BIT. MATERIALS PRIME COAT	AGGREGATE MATERIALS PRIME COAT	POLYMERIZED LEVELING BINDER (MM) 0.75 IN	HOT-MIX ASPHALT SURF CSE MIX D N50 1.5 IN	INCIDENTAL HOT-MIX ASPH. SURF.	HOT-MIX ASPHALT SHOULDERS		AGGREGATE SHOULDERS TYPE B	
													LEFT SIDE	RIGHT SIDE	LEFT SIDE	RIGHT SIDE
	FT	FT	SQ YD	SQ YD	SQ YD	SQ YD	SQ YD	TON	TON	TON	TON	TON	TON	TON	TON	TON
STA. 162 + 50 TO 163 + 00	26.00	50.00	144.44			144.44		0.08	0.51	6.07	12.13		0.93	2.33	1.42	1.42
STA. 163 + 00 TO 171 + 00	26.00	800.00	2311.11			2311.11		1.27	7.64	97.07	194.13		14.93	14.93	22.78	22.78
STA. 171 + 00 TO 175 + 50	26.00	450.00	1300.00			1300.00		0.75	4.60	54.60	109.20		21.00	8.40	12.81	12.81
STA. 175 + 50 TO 195 + 50	26.00	2000.00	5777.78			5777.78		3.18	19.11	242.67	485.33		37.33	37.33	56.94	56.94
STA. 195 + 50 TO 200 + 00	26.00	450.00	1300.00			1300.00	250.00	0.80	4.60	54.60	109.20		8.40	21.00	12.81	
STA. 200 + 00 TO 201 + 00	26.00	100.00	288.89			288.89	55.56	0.18	1.02	12.13	24.27		1.87	4.67	2.85	
STA. 201 + 00 TO 202 + 75	26.00	175.00	505.56			505.56		0.29	1.79	21.23	42.47		3.27	8.17	4.98	4.98
STA. 202 + 75 TO 204 + 50	26.00	175.00	505.56			505.56	97.22	0.31	1.79	21.23	42.47		3.27	8.17	4.98	
STA. 204 + 50 TO 206 + 50	26.00	200.00	577.78			577.78	111.11	0.35	2.04	24.27	48.53		3.73	9.33	5.69	
STA. 206 + 50 TO 212 + 00	26.00	550.00	1588.89			1588.89		0.88	5.26	66.73	133.47		10.27	10.27	15.66	15.66
STA. 212 + 00 TO 212 + 50	26.00	50.00	144.44			144.44		0.08	0.51	6.07	12.13		0.93	2.33	1.42	1.42
STA. 212 + 50 TO 215 + 98	26.00	348.00	1005.33			1005.33	193.33	0.62	3.56	42.22	84.45		6.50	16.24	9.91	
STA. 215 + 98 TO 216 + 55	26.00	57.00	164.67			164.67		0.09	0.58	6.92	13.83		1.06	2.66	1.62	1.62
STA. 216 + 55 TO 219 + 35	26.00	280.00	808.89			808.89	155.56	0.49	2.86	33.97	67.95		5.23	13.07	7.97	
STA. 219 + 35 TO 219 + 92	26.00	57.00	164.67			164.67		0.09	0.58	6.92	13.83		1.06	2.66	1.62	1.62
STA. 219 + 92 TO 222 + 09	26.00	217.00	626.89			626.89	120.56	0.38	2.22	26.33	52.66		4.05	10.13	6.18	
STA. 222 + 09 TO 222 + 43	26.00	34.00	98.22			98.22		0.06	0.35	4.13	8.25		0.63	1.59	0.97	0.97
STA. 222 + 43 TO 226 + 50	26.00	407.00	1175.78			1175.78	226.11	0.72	4.16	49.38	98.77		7.60	18.99	11.59	
STA. 226 + 50 TO 228 + 50	26.00	200.00	577.78			577.78		0.33	2.04	24.27	48.53		3.73	9.33	5.69	5.69
STA. 228 + 50 TO 230 + 50	26.00	200.00	577.78			577.78	111.11	0.35	2.04	24.27	48.53		3.73	9.33	5.69	
STA. 230 + 50 TO 231 + 75	26.00	125.00	361.11			361.11		0.21	1.28	15.17	30.33		2.33	5.83	3.56	3.56
STA. 231 + 75 TO 235 + 00	26.00	325.00	938.89			938.89	180.56	0.57	3.32	39.43	78.87		6.07	15.17	9.25	
STA. 235 + 00 TO 236 + 00	26.00	100.00	288.89			288.89		0.17	1.02	12.13	24.27		1.87	4.67	2.85	2.85
STA. 236 + 00 TO 237 + 00	26.00	100.00	288.89			288.89	55.56	0.18	1.02	12.13	24.27		1.87	4.67	2.85	
STA. 237 + 00 TO 239 + 00	26.00	200.00	577.78			577.78	111.11	0.35	2.04	24.27	48.53		3.73	9.33	5.69	5.69
STA. 239 + 00 TO 240 + 00	26.00	100.00	288.89			288.89	55.56	0.18	1.09	12.13	24.27		4.67	4.67	2.85	
STA. 240 + 00 TO 242 + 00	26.00	200.00	577.78			577.78		0.34	2.18	24.27	48.53		9.33	9.33	5.69	5.69
STA. 242 + 00 TO 245 + 00	26.00	300.00	866.67			866.67		0.50	3.07	36.40	72.80		5.60	14.00	8.54	8.54
STA. 245 + 00 TO 249 + 00	26.00	400.00	1155.56			1155.56	222.22	0.71	4.09	48.53	97.07		7.47	18.67	11.39	
STA. 249 + 00 TO 251 + 00	26.00	200.00	577.78			577.78	111.11	0.37	2.18	24.27	48.53		9.33	9.33	5.69	
STA. 251 + 00 TO 252 + 25	26.00	125.00	361.11			361.11		0.22	1.36	15.17	30.33		5.83	5.83	3.56	3.56
STA. 252 + 25 TO 253 + 75	26.00	150.00	433.33			433.33	83.33	0.28	1.63	18.20	36.40		7.00	7.00	4.27	
STA. 253 + 75 TO 254 + 00	26.00	25.00	72.22			72.22		0.04	0.27	3.03	6.07		1.17	1.17	0.71	0.71
STA. 254 + 00 TO 255 + 00	26.00	100.00	288.89			288.89		0.17	1.02	12.13	24.27		1.87	4.67	2.85	2.85
STA. 255 + 00 TO 258 + 75	26.00	375.00	1083.33			1083.33	208.33	0.66	3.83	45.50	91.00		7.00	17.50	10.68	
STA. 258 + 75 TO 259 + 50	26.00	75.00	216.67			216.67		0.12	0.77	9.10	18.20		1.40	3.50	2.14	2.14
STA. 259 + 50 TO 261 + 75	26.00	225.00	650.00			650.00		0.36	2.15	27.30	54.60		4.20	4.20	6.41	6.41
STA. 261 + 75 TO 269 + 01	26.00	726.41	2098.52			2098.52		1.16	6.94	88.14	176.28		13.56	13.56	20.68	20.68
STA. EQ. 269+01.41 (BK) =																
269+09.00 (AH)																
SUB-TOTAL (FROM SHEET 9)						**30,771**	**2,348**	**18**	**107**	**1,292**	**2,585**		**234**	**364**	**303**	**189**

TABULATION OF RESURFACING QUANTITIES

LOCATION	TOTAL ROADWAY WIDTH	LENGTH	AREA	HOT-MIX ASPH. SURF. REMOVAL BUTT JOINT	TEMPORARY RAMP	HOT-MIX ASPH. SURF. REMOVAL 0.75 IN	HOT-MIX ASPH. SURF. REMOVAL VAR. DEPTH	POLY. BIT. MATERIALS PRIME COAT	AGGREGATE MATERIALS PRIME COAT	POLYMERIZED LEVELING BINDER (MM) 0.75 IN	HOT-MIX ASPHALT SURF CSE MIX D N50 1.5 IN	INCIDENTAL HOT-MIX ASPH. SURF.	HOT-MIX ASPHALT SHOULDERS		AGGREGATE SHOULDERS TYPE B	
													LEFT SIDE	RIGHT SIDE	LEFT SIDE	RIGHT SIDE
	FT	FT	SQ YD	SQ YD	SQ YD	SQ YD	SQ YD	TON	TON	TON	TON	TON	TON	TON	TON	TON
STA. 269 + 09 TO 276 + 50	26.00	741.00	2140.67			2140.67		1.18	7.08	89.91	179.82		13.83	13.83	21.10	21.10
STA. 276 + 50 TO 277 + 00	26.00	50.00	144.44			144.44		0.08	0.51	6.07	12.13		0.93	2.33	1.42	1.42
STA. 277 + 00 TO 280 + 50	26.00	350.00	1011.11			1011.11	194.44	0.62	3.58	42.47	84.93		6.53	16.33	9.97	
STA. 280 + 50 TO 281 + 00	26.00	50.00	144.44			144.44		0.08	0.51	6.07	12.13		0.93	2.33	1.42	1.42
STA. 281 + 00 TO 316 + 00	26.00	3500.00	10111.11			10111.11		5.57	33.44	424.67	849.33		65.33	65.33	99.65	99.65
STA. 316 + 00 TO 318 + 00	26.00	200.00	577.78	120.00	20.00	577.78		0.34	2.18	24.27	48.53		9.33	9.33	5.69	5.69
BRIDGE OMISSION																
STA. 319 + 90 TO 321 + 00	26.00	110.00	317.78	120.00	20.00	317.78		0.19	1.20	13.35	26.69		5.13	5.13	3.13	3.13
STA. 321 + 00 TO 361 + 50	26.00	4050.00	11700.00			11700.00		6.44	38.70	491.40	982.80		75.60	75.60	115.31	115.31
STA. 361 + 50 TO 362 + 00	26.00	50.00	144.44			144.44		0.09	0.54	6.07	12.13		2.33	2.33	1.42	1.42
STA. 362 + 00 TO 374 + 50	26.00	1250.00	3611.11			3611.11	694.44	2.29	13.61	151.67	303.33		58.33	58.33	35.59	
STA. 374 + 50 TO 380 + 00	26.00	550.00	1588.89			1588.89		0.95	5.99	66.73	133.47		25.67	25.67	15.66	15.66
STA. 380 + 00 TO 381 + 00	26.00	100.00	288.89			288.89		0.17	1.09	12.13	24.27		4.67	4.67	2.85	2.85
STA. 381 + 00 TO 383 + 50	26.00	250.00	722.22			722.22	138.89	0.46	2.72	30.33	60.67		11.67	11.67	7.12	
STA. 383 + 50 TO 386 + 11	26.00	260.55	752.70			752.70	144.75	0.46	2.66	31.61	63.23		4.86	12.16	7.42	
STA. EQ. 386+10.55 (BK) =																
385+82.67 (AH)																
STA. 385 + 83 TO 393 + 50	26.00	767.33	2216.73			2216.73	426.29	1.36	7.84	93.10	186.21		14.32	35.81	21.85	
STA. 393 + 50 TO 394 + 00	26.00	50.00	144.44			144.44	27.78	0.09	0.54	6.07	12.13		2.33	2.33	1.42	
STA. 394 + 00 TO 396 + 00	26.00	200.00	577.78			577.78		0.34	2.18	24.27	48.53		9.33	9.33	5.69	5.69
STA. 396 + 00 TO 397 + 50	26.00	150.00	433.33			433.33		0.25	1.53	18.20	36.40		7.00	2.80	4.27	4.27
STA. 397 + 50 TO 432 + 50	26.00	3500.00	10111.11			10111.11		5.57	33.44	424.67	849.33		65.33	65.33	99.65	99.65
STA. 432 + 50 TO 433 + 10	26.00	60.00	173.33			173.33		0.10	0.61	7.28	14.56		2.80	1.12	1.71	1.71
STA. 433 + 10 TO 434 + 50	26.00	140.00	404.44			404.44		0.24	1.52	16.99	33.97		6.53	6.53	3.99	3.99
STA. 434 + 50 TO 435 + 35	26.00	85.00	245.56			245.56		0.14	0.87	10.31	20.63		3.97	1.59	2.42	2.42
STA. 435 + 35 TO 450 + 00	26.00	1465.00	4232.22			4232.22		2.33	14.00	177.75	355.51		27.35	27.35	41.71	41.71
STA. 450 + 00 TO 454 + 00	26.00	400.00	1155.56			1155.56		0.66	4.09	48.53	97.07		18.67	7.47	11.39	11.39
STA. 454 + 00 TO 460 + 00	26.00	600.00	1733.33			1733.33		0.95	5.73	72.80	145.60		11.20	11.20	17.08	17.08
STA. 460 + 00 TO 464 + 00	26.00	400.00	1155.56			1155.56		0.66	4.09	48.53	97.07		18.67	7.47	11.39	11.39
STA. 464 + 00 TO 476 + 50	26.00	1250.00	3611.11			3611.11		1.99	11.94	151.67	303.33		23.33	23.33	35.59	35.59
STA. 476 + 50 TO 478 + 33	26.00	183.00	528.67	120.00	20.00	528.67		0.32	1.99	22.20	44.41		8.54	8.54	5.21	5.21
BRIDGE OMISSION																
STA. 479 + 82 TO 482 + 50	26.00	268.00	774.22	120.00	20.00	774.22		0.46	2.92	32.52	65.03		12.51	12.51	7.63	7.63
STA. 482 + 50 TO 500 + 00	26.00	1750.00	5055.56			5055.56		2.78	16.72	212.33	424.67		32.67	32.67	49.83	49.83
STA. 500 + 00 TO 504 + 50	26.00	450.00	1300.00			1300.00		0.75	4.60	54.60	109.20		8.40	21.00	12.81	12.81
STA. 504 + 50 TO 509 + 50	26.00	500.00	1444.44			1444.44		0.80	4.78	60.67	121.33		9.33	9.33	14.24	14.24
STA. 509 + 50 TO 515 + 95	26.00	645.00	1863.33			1863.33		1.07	6.59	78.26	156.52		30.10	12.04	18.36	18.36
STA. 515 + 95 TO 524 + 00	26.00	805.00	2325.56			2325.56		1.39	8.77	97.67	195.35		37.57	37.57	22.92	22.92
STA. 524 + 00 TO 528 + 20	26.00	420.00	1213.33			1213.33	233.33	0.77	4.57	50.96	101.92		19.60	19.60	11.96	
STA. 528 + 20 TO 528 + 54	26.00	34.00	98.22			98.22		0.06	0.37	4.13	8.25		1.59	1.59	0.97	0.97
SUB-TOTAL (FROM SHEET 10)				**480**	**80**	**74,053**	**1,860**	**42**	**254**	**3,110**	**6,220**		**656**	**662**	**730**	**635**

TABULATION OF RESURFACING QUANTITIES

LOCATION	TOTAL ROADWAY WIDTH	LENGTH	AREA	HOT-MIX ASPH. SURF. REMOVAL BUTT JOINT	TEMPORARY RAMP	HOT-MIX ASPH. SURF. REMOVAL 0.75 IN	HOT-MIX ASPH. SURF. REMOVAL VAR. DEPTH	POLY. BIT. MATERIALS PRIME COAT	AGGREGATE MATERIALS PRIME COAT	POLYMERIZED LEVELING BINDER (MM) 0.75 IN	HOT-MIX ASPHALT SURF CSE MIX D N50 1.5 IN	INCIDENTAL HOT-MIX ASPH. SURF.	HOT-MIX ASPHALT SHOULDERS		AGGREGATE SHOULDERS TYPE B	
													LEFT SIDE	RIGHT SIDE	LEFT SIDE	RIGHT SIDE
	FT	FT	SQ YD	SQ YD	SQ YD	SQ YD	SQ YD	TON	TON	TON	TON	TON	TON	TON	TON	TON
STA. 528 + 54 TO 532 + 37	26.00	383.00	1106.44			1106.44	212.78	0.70	4.17	46.47	92.94		17.87	17.87	10.90	
STA. 532 + 37 TO 532 + 59	26.00	22.00	63.56			63.56		0.04	0.24	2.67	5.34		1.03	1.03	0.63	0.63
STA. 532 + 59 TO 536 + 00	26.00	341.00	985.11			985.11		0.59	3.71	41.37	82.75		15.91	15.91	9.71	
STA. 536 + 00 TO 536 + 29	26.00	28.69	82.88			82.88		0.05	0.31	3.48	6.96		1.34	1.34	0.82	
STA. 536 + 29 TO 538 + 43	26.00	214.46	619.55			619.55		0.35	2.44	26.02	52.04			10.01	6.11	6.11
STA. 538 + 43 TO 541 + 49	26.00	305.85	883.57			883.57		0.53	3.23	37.11	74.22		14.27	14.27	8.71	8.71
STA. EQ. 541+48+96 (BK) =																
1336+89.96 (AH)																
STA. 1336 + 90 TO 1338 + 50	26.00	160.04	462.34			462.34		0.28	1.74	19.42	38.84		7.47	7.47	4.56	4.56
STA. 1338 + 50 TO 1342 + 78	26.00	428.00	1236.44			1236.44	237.78	0.76	4.38	51.93	103.86		7.99	19.97	12.19	
STA. 1342 + 78 TO 1346 + 00	26.00	322.00	930.22	93.33	15.55	930.22		0.50	2.93	39.07	78.14		6.01		9.17	9.17
RT. 78 INTERSECTION			1849.86	186.66	31.10	1849.86	338.00	1.10	6.45	77.69	155.39		8.68	40.38	8.83	1.28
SIDEROADS																
WHYMANN RD			129.03	105.96	20.00			0.03	0.30			10.84				
McKINLEY RD			174.59	88.44	16.67	96.00		0.04	0.36			14.67				
BROWN RD			149.30	73.26	12.78	71.61		0.03	0.25			12.54				
DUCK ISLAND RD			117.00		28.00	117.00		0.11	1.08			9.83				
OLD WEAVER RD			99.29	71.34	15.55	19.56		0.02	0.19			8.34				
SPEEDWAY RD			189.29	107.19	18.33	92.07		0.03	0.29			15.90				
POLLIT RD			144.17	125.10	19.44	40.98		0.02	0.22			12.11				
COUNTY HIGHWAY 8 (LT)			75.36	63.75	13.33	102.33		0.05	0.48			6.33				
COUNTY HIGHWAY 8 (RT)			163.93		35.83	75.36		0.03	0.25			13.77				
TOWNSHIP ROAD 395			73.95	73.95	17.78			0.02	0.16			6.21				
MAILBOX TURNOUT (13)			531.57									44.65				
MAILBOX TURNOUT + ENT. (17)			704.48									59.18				
PRIVATE ENTERANCE	0.00		597.24									50.17				
COMMERCIAL ENTERANCE	0.00		311.10									26.13				
SUB-TOTAL				**989**	**244**	**8,835**	**789**	**5**	**33**	**345**	**690**	**291**	**81**	**128**	**72**	**30**
SUB-TOTAL (FROM SHEET 8)				**583**	**97**	**44,498**	**1,474**	**26**	**156**	**1,869**	**3,738**		**428**	**500**	**439**	**359**
SUB-TOTAL (FROM SHEET 9)						**30,771**	**2,348**	**18**	**107**	**1,292**	**2,585**		**234**	**364**	**303**	**189**
SUB-TOTAL (FROM SHEET 10)				**480**	**80**	**74,053**	**1,860**	**42**	**254**	**3,110**	**6,220**		**656**	**662**	**730**	**635**
GRAND-TOTAL				**2,052**	**422**	**158,157**	**6,471**	**91**	**549**	**6,617**	**13,234**	**291**	**1,399**	**1,653**	**1,543**	**1,212**

PRIME COAT CONVERSION FACTORS		
SURFACE TYPE	POLY. BIT. PRIME COAT (GAL / SQYD)	AGG. PRIME COAT (LB / SQ YD)
COLD MILLED SURFACES	0.1	4
EXISTING PAVEMENT	0.05	4
NEW HOT-MIX ASPH. CSE	0.03	2

HOT-MIX ASPHALT & AGGREGATE CONVERSION FACTORS	
SURFACE TYPE	
HOT-MIX ASPHALT SURF CSE	112 LB/SQ YD /IN
ALL OTHERS HOT-MIX ASPH.	112 LB/SQ YD /IN
AGGREAGATE SHOULDERS	2.05 TONS / CU YD

TREE REMOVAL, ACRES		
Location	UNIT	Qty.
Rt. Sta. 536+05 to Rt. Sta. 538+82.43	ACRE	0.28
		TOTAL = 0.28

TOPSOIL FURNISH AND PLACE, 4"		
Location	UNIT	Qty.
Rt. Sta. 536+00 to Rt. Sta. 538+75	SQ YD	796
		TOTAL = 796

STONE RIPRAP CLASS A4		
Location	UNIT	Qty.
Rt. Sta. 537+64.31 to Rt. Sta. 537+73.53	TON	6.5
		TOTAL = 6.5

EARTH EXCAVATION		
Location	UNIT	Qty.
Rt. Sta. 536+00 to Rt. Sta. 538+75	CU YD	256
		TOTAL = 256

SEEDING, CLASS 3		
Location	UNIT	Qty.
Rt. Sta. 536+24.90 to Rt. Sta. 538+81.57	ACRE	0.25
		TOTAL = 0.25

FILTER FABRIC		
Location	UNIT	Qty.
Rt. Sta. 537+64.31 to Rt. Sta. 537+73.53	SQ YD	8.5
		TOTAL = 8.5

REMOVAL AND DISPOSAL OF UNSUITABLE MATERIAL		
Location	UNIT	Qty.
Rt. Sta. 536+68.90	CU YD	42
		TOTAL = 42

NITROGEN FERTILIZER NUTRIENTS		
Location	UNIT	Qty.
Rt. Sta. 536+24.90 to Rt. Sta. 538+81.57	POUND	23
		TOTAL = 23

FABRIC FORMED CONCRETE PAVEMENT MAT		
Location	UNIT	Qty.
Rt. Sta. 536+24.90 to Rt. Sta. 537+64.31	SQ YD	227.00
Rt. Sta. 537+73.53 to Rt. Sta. 5387+68.82		214.00
		TOTAL = 441

FURNISHED EXCAVATION		
Location	UNIT	Qty.
Rt. Sta. 536+00 TO Rt. Sta. 538+75	CU YD	415
		TOTAL = 415

PHOSPHORUS FERTILIZER NUTRIENTS		
Location	UNIT	Qty.
Rt. Sta. 536+24.90 to Rt. Sta. 538+81.57	POUND	23
		TOTAL = 23

CONSTRUCTION TEST STRIP		
Location	UNIT	Qty.
JOBSITE	EACH	2
		TOTAL = 2

POROUS GRANULAR EMBANKMENT		
Location	UNIT	Qty.
Rt. Sta. 537+68.90	CU YD	4
		TOTAL = 4

POTASSIUM FERTILIZER NUTRIENTS		
Location	UNIT	Qty.
Rt. Sta. 536+24.90 to Rt. Sta. 538+81.57	POUND	23
		TOTAL = 23

CURB REMOVAL		
Location	UNIT	Qty.
Rt. Sta. 536+28.68 to Rt. Sta. 538+43.49	FOOT	215
		TOTAL = 215

GEOTECHNICAL FABRIC FOR GROUND STABILIZATION		
Location	UNIT	Qty.
Rt. Sta. 537+68.90	SQ YD	22
		TOTAL = 22

HEAVY DUTY EROSION CONTROL BLANKET		
Location	UNIT	Qty.
Rt. Sta. 536+24.90 to Rt. Sta. 538+81.57	SQ YD	796
		TOTAL = 796

PAVED SHOULDER REMOVAL		
Location	UNIT	Qty.
Rt. Sta. 536+28.68 to Rt. Sta. 538+43.49	SQ YD	130
		TOTAL = 130

HOT-MIX ASPHALT SHOULDERS, 8"		
Location	UNIT	Qty.
Rt. Sta. 536+28.68 to Rt. Sta. 538+43.49	SQ YD	120
		TOTAL = 120

CLASS D PATCHES					
	Location Sta. to Sta.	No. of Patches	Type 2 sq. yd.	Type 3 sq. yd.	Type 4 sq. yd.
1	7+45 to 74+92	34 1	234.06	17.33	
2	75+54 to 81+15	3 2	17.33		144.44
3	81+15 to 112+04	22	132.94		
4	112+04 to 317+10	42 2	291.87	34.67	
5	320+47 to 395+43	10 1	72.24	17.33	
6	395+43 to 461+34	9	78.02		
7	461+34 to 490+32	10	69.36		
8	490+32 to 1346+00	9	60.69		
Totals			956.51	69.33	144.44

CONCRETE REMOVAL		
Location	UNIT	Qty.
Rt. Sta. 537+68.90	CU YD	1.4
		TOTAL = 1.4

REINFORCEMENT BARS		
Location	UNIT	Qty.
Rt. Sta. 537+68.90	POUND	1,508
		TOTAL = 1,508

EXPANSION BOLTS 3/4 INCH		
Location	UNIT	Qty.
Rt. Sta. 537+68.90	EACH	12
		TOTAL = 12

CONCRETE BOX CULVERTS		
Location	UNIT	Qty.
Rt. Sta. 537+68.90	CU YD	10
		TOTAL = 10

METAL END SECTIONS 12"		
Location	UNIT	Qty.
Rt. Sta. 537+00	EACH	1
Rt. Sta. 538+37.28		1
		TOTAL = 2

CONCRETE COLLAR		
Location	UNIT	Qty.
Rt. Sta. 537+68.90	CU YD	0.5
		TOTAL = 0.5

PIPE DRAINS 12"		
Location	UNIT	Qty.
Rt. Sta. 537+00	FOOT	28
Rt. Sta. 538+37.28		32
		TOTAL = 60

TYPE C INLET BOX, STANDARD 609001 (SPECIAL)		
Location	UNIT	Qty.
Rt. Sta. 537+00	EACH	1
Rt. Sta. 538+37.28		1
		TOTAL = 2

CONCRETE THRUST BLOCKS		
Location	UNIT	Qty.
Rt. Sta. 537+00	EACH	1
Rt. Sta. 538+37.28		1
		TOTAL = 2

STEEL PLATE BEAM GUARD RAIL, TYPE A		
Location	UNIT	Qty.
Lt. Sta. 530+02.5 to Lt. Sta. 533+02.5	FOOT	300
Rt. Sta. 536+80.65 to Rt. Sta. 538+43.15		162.5
		TOTAL = 462.5

TRAFFIC BARRIER TERMINAL TYPE 1, SPECIAL (TANGENT)		
Location	UNIT	Qty.
Lt. Sta. 529+52.5 to Lt. Sta. 530+02.5	EACH	1
Lt. Sta. 535+65 to Lt. Sta. 536+15		1
Rt. Sta. 536+28.68 to Rt. Sta. 536+78.68		1
		TOTAL = 3

GUARDRAIL REMOVAL		
Location	UNIT	Qty.
Lt. Sta. 529+80 to Lt. Sta. 530+05	FOOT	25
Lt. Sta. 532+77.5 to Lt. Sta. 533+02.5		25
Lt. Sta. 535+65 to Rt. Sta. 535+90		25
Rt. Sta. 536+53.69 to Rt. Sta. 538+41.19		187.5
		TOTAL = 262.5

TRAFFIC BARRIER TERMINAL REMOVAL, TYPE 1		
Location	UNIT	Qty.
Lt. Sta. 529+55 to Lt. Sta. 529+80	EACH	1
Lt. Sta. 530+05 to Lt. Sta. 530+30		1
Lt. Sta. 532+52.5 to Lt. Sta. 532+77.5		1
Lt. Sta. 535+90 to Lt. Sta. 536+15		1
Rt. Sta. 536+28.69 to Rt. Sta. 536+53.69		1
		TOTAL = 5

EROSION CONTROL CURB		
Location	UNIT	Qty.
Rt. Sta. 536+28.68 to Rt. Sta. 538+43.49	FOOT	215
		TOTAL = 215

GUARDRAIL MARKERS, TYPE A

STATION TO STATION	EACH
Lt Sta. 529+55 to 532+77	6
Lt Sta. 535+65 to 536+15	2
Rt Sta. 536+28.68 to 538+43.49	3
TOTAL	11

MOBILIZATION

Location	UNIT	Qty.
Jobsite	L. Sum	1
		TOTAL = 1

PERMANENT SURVEY MARKERS, TYPE I

STATION	EACH	STATION	EACH
Sta. 12+00	1	Sta. 312+39.39	1
Sta. 21+80.81	1	Sta. 317+00	1
Sta. 35+00	1	Sta. 330+00	1
Sta. 45+00	1	Sta. 340+00	1
Sta. 55+00	1	Sta. 350+00	1
Sta. 65+00	1	Sta. 360+00	1
Sta. 75+00	1	Sta. 373+99.73	1
Sta. 90+00	1	Sta. 385+69.40 (BK) = 385+41.18 (AH)	1
Sta. 100+00	1		
Sta. 110+00	1	Sta. 369+00	1
Sta. 120+00	1	Sta. 400+00	1
Sta. 130+00	1	Sta. 410+00	1
Sta. 140+00	1	Sta. 420+00	1
Sta. 152+85.04	1	Sta. 430+00	1
Sta. 160+83.48	1	Sta.440+00	1
Sta. 185+00	1	Sta.450+00	1
Sta. 195+00	1	Sta. 460+00	1
Sta. 205+00	1	Sta. 470+12.68	1
Sta. 221+00	1	Sta. 479+99.43	1
Sta. 235+00	1	Sta. 501+32.49	1
Sta. 247+22.47	1	Sta. 533+84.79	1
Sta. 261+66.64	1	Sta. 541+48.96	1
Sta. 302+50.66	1		
			TOTAL = 44

TERMINAL MARKER - DIRECT APPLIED

LOCATION	EACH
Lt Sta. 527+67.5	1
Lt Sta. 582+02.5	1
Rt Sta. 536+28.68	1
TOTAL	3

TRAFFIC CONTROL AND PROTECTION, STANDARD 701201

Location	UNIT	Qty.
Jobsite	L. Sum	1
		TOTAL = 1

TRAFFIC CONTROL AND PROTECTION, STANDARD 701306

Location	UNIT	Qty.
Jobsite	L. Sum	1
		TOTAL = 1

TRAFFIC CONTROL AND PROTECTION, STANDARD 701336

Location	UNIT	Qty.
Jobsite	L. Sum	1
		TOTAL = 1

SHORT-TERM PAVEMENT MARKING

STATION TO STATION	LENGTH (FEET)
Sta. 7+45 to 74+92	675
Sta. 75+54 to 109+78	342
Sta. 110+18 to 269+01.41	1,589
Sta. 269+09 to 318+00	489
Sta. 319+90 to 386+10.55	662
Sta. 385+82.67 to 478+33	925
Sta. 479+82 to 541+48.96	617
Sta. 1336+89.96 to 1346+00	91
Rt. 78 Intersection	43
TOTAL (3 APPLICATIONS)	16,298

PREPARATION OF BASE

Specific locations and quantities appear on sheets 26 to 29	44 SQ YD

PAINT PAVEMENT MARKING - LINE 4"
TEMPORARY PAVEMENT MARKING - LINE 4"

STATION	EDGELINE WHITE 4"	SKIP DASH YELLOW 4"	SOLID YELLOW 4"	DOUBLE YELLOW 4"
7+45 TO 54+19	4,674	4,674		
54+19 TO 64+74 (RT)	1,055	1,055	1,055	
64+74 TO 74+92	1,018			1,018
BRIDGE OMISSION	—	—	—	—
75+54 TO 79+00	346			346
79+00 TO 87+97 (LT)	897	897	897	
87+97 TO 109+78	2,181	2,181		
BRIDGE OMISSION	—	—	—	—
110+18 TO 145+73	3,555	3,555		
145+73 TO 155+76 (RT)	1,003	1,003	1,003	
155+76 TO 157+87	211			211
157+87 TO 166+85 (LT)	898	898	898	
166+85 TO 210+70	4,385	4,385		
210+70 TO 216+50 (RT)	580	580	580	
216+50 TO 220+72	422	422		
220+72 TO 226+00 (LT)	528	528	528	
226+00 TO 227+05	105	105		
227+05 TO 236+68 (RT)	963	963	963	
236+68 TO 249+75	1,307			1,307
249+75 TO 259+51 (LT)	976	976	976	
259+51 TO 268+84	933	933		
268+84 TO 277+29 (RT)*	837	837	837	
277+29 TO 285+74 (LT)	845	845	845	
285+74 TO 318+00	3,226	3,226		
BRIDGE OMISSION	—			
319+90 TO 357+55	3,765	3,765		
357+55 TO 368+11 (RT)	1,056	1,056	1,056	
368+11 TO 386+83**	1,900			1,900
386+83 TO 396+33 (LT)	950	950	950	
396+33 TO 431+08	3,475	3,475		
431+08 TO 442+17 (RT)	1,109	1,109	1,109	
442+17 TO 444+28	211	211		
444+28 TO 449+56 (LT)	528	528	528	
449+56 TO 454+84	528	528		
454+84 TO 459+60 (RT)	476	476	476	
459+60 TO 461+70	210			210
461+70 TO 471+20 (LT)	950	950	950	
471+20 TO 474+90	370			370
474+90 TO 478+33 (RT)	343	343	343	
BRIDGE OMISSION	—	—	—	—
479+82 TO 484+19 (RT)	437	437	437	
484+19 TO 490+53	634			634
490+53 TO 492+40 (LT)	187	187	187	
492+40 TO 502+43	1,003	1,003		
502+43 TO 511+93 (RT)	950	950	950	
511+93 TO 528+30	1,637			1,637
528+30 TO 535+16 (RT)	686	686	686	
535+16 TO 1346+00***	1,543			1,543
RT. 78 INTERSECTION	862			200
TOTAL	54,325	11,177	16,254	9,377
TOTAL TWO SIDES	108,650			18,754
TOTAL 4"	154,835			

PAINT PAVEMENT MARKING - LINE 8" TEMPORARY PAVEMENT MARKING - LINE 8"		
STATION	PAINTED MEDIAN	
	WHITE 8"	YELLOW 8"
RT. 78 INTERSECTION	165	330
TOTAL	165	330
TOTAL 8"	495	

PAINT PAVEMENT MARKING - LINE 12" TEMPORARY PAVEMENT MARKING - LINE 12"	
STATION	PAINTED MEDIAN
	YELLOW 12"
RT. 78 INTERSECTION	320
TOTAL	320

PAINT PAVEMENT MARKING - LINE 24" TEMPORARY PAVEMENT MARKING - LINE 24"	
STATION	STOP BAR
	WHITE 24"
RT. 78 INTERSECTION	20
TOTAL	20

WORK ZONE PAVEMENT MARKING REMOVAL	
STATION TO STATION	AREA (SQ FT)
Sta. 7+45 to 74+92	675
Sta. 75+54 to 109+78	342
Sta. 110+18 to 269+01.41	1,589
Sta. 269+09 to 318+00	489
Sta. 319+90 to 386+10.55	662
Sta. 385+82.67 to 478+33	925
Sta. 479+82 to 541+48.96	617
Sta. 1336+89.96 to 1346+00	91
Rt. 78 Intersection	43
TOTAL	5,433

RAISED REFLECTIVE PAVEMENT MARKER REMOVAL	
STATION TO STATION	EACH
Sta. 7+45 to 1346+00	625
TOTAL	625

RAISED REFLECTIVE PAVEMENT MARKER	
STATION TO STATION	EACH
Sta. 7+45 to 74+92	84
Sta. 75+54 to 109+78	43
Sta. 110+18 to 269+01.41	199
Sta. 269+09 to 318+00	61
Sta. 319+90 to 386+10.55	83
Sta. 385+82.67 to 478+33	116
Sta. 479+82 to 541+48.96	77
Sta. 1336+89.96 to 1346+00	12
TOTAL	675

GUARDRAIL AGGREGATE EROSION CONTROL		
Location	UNIT	Qty.
Lt. Sta. 529+52.5 to Lt. Sta. 533+02.5	TON	62
Lt. Sta. 535+65 to Lt. Sta. 536+15		9
Rt. Sta. 536+28.68 to Rt. Sta. 538+41.18		38
		TOTAL = 109

PIPE ELBOW, 12"		
Location	UNIT	Qty.
Rt. Sta. 537+00	EACH	2
Rt. Sta. 538+37.28		2
		TOTAL = 4

REVETMENT MAT REMOVAL		
Location	UNIT	Qty.
Rt. Sta. 536+75 to Rt. Sta. 537+75	SQ YD	156
		TOTAL = 156

PIPE DRAIN REMOVAL		
Location	UNIT	Qty.
Rt. Sta. 537+00.00	FOOT	22
		TOTAL = 22

AGGREGATE BASE REPAIR	
Specific locations and quantities appear on sheets 26 to 29	20 TON

RUMBLE STRIP	
STATION TO STATION	SQ YD
Lt Sta. 8+31 to 8+56	12
Lt Sta. 8+84 to 9+09	12
Lt Sta. 10+31 to 10+56	12
Lt Sta. 11+05 to 11+30	12
Lt Sta. 14+47 to 14+72	12
Lt Sta. 16+75 to 17+00	12
TOTAL	72

ROCK FILL		
Location	UNIT	Qty.
Rt. Sta. 537+68.90	TON	11
		TOTAL = 11

TEMPORARY DITCH CHECKS		
Location	UNIT	Qty.
Rt. Sta. 536+24.90 to Rt. Sta. 537+64.31	EACH	4
Rt. Sta. 537+73.53 to Rt. Sta. 5387+68.82		4
		TOTAL = 8

PERIMETER EROSION BARRIER		
Location	UNIT	Qty.
Rt. Sta. 537+50 to Rt. Sta. 538+00	FOOT	60
		TOTAL = 60

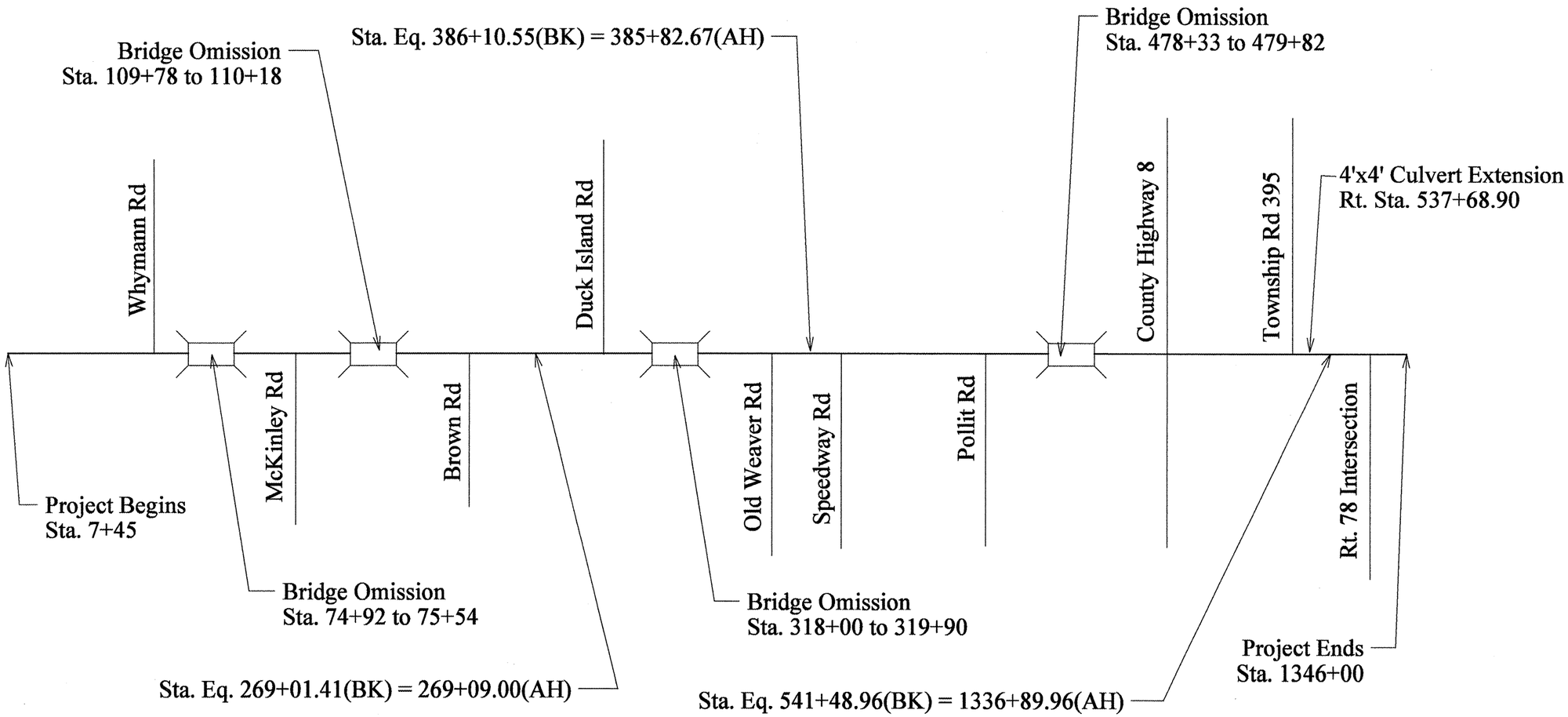

FILE NAME = S:\GEN\DRAFT\STD&PLNS\SQUAD11\68337\68337A\plans.dgn	USER NAME = brucebm	DESIGNED -	REVISED -
		DRAWN -	REVISED -
	PLOT SCALE = 44.2009 ' / IN.	CHECKED -	REVISED -
	PLOT DATE = 10/14/2008	DATE -	REVISED -

STATE OF ILLINOIS
DEPARTMENT OF TRANSPORTATION

LINE DIAGRAM

SCALE: | SHEET NO. OF SHEETS | STA. TO STA.

F.A.P 317	SECTION	COUNTY	TOTAL SHEETS	SHEET NO.
US24	(137,102)RS-4; 101RS-3	FULTON	56	16

CONTRACT NO. 68337

FED. ROAD DIST. NO. | ILLINOIS | FED. AID PROJECT

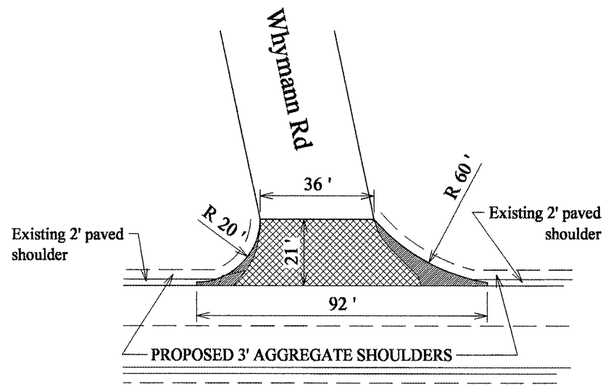

Whymann Road and US 24

ITEMS	UNITS	QUANTITY
PREPARATION OF BASE	SQ YD	22.56
AGGREGATE BASE REPAIR	TON	10.28
HOT-MIX SURF. REM. BUTT JOINT	SQ YD	105.96
HOT-MIX SURF. REM. 3/4"	SQ YD	0.00
INCIDENTAL HOT-MIX SURFACING	TON	10.79

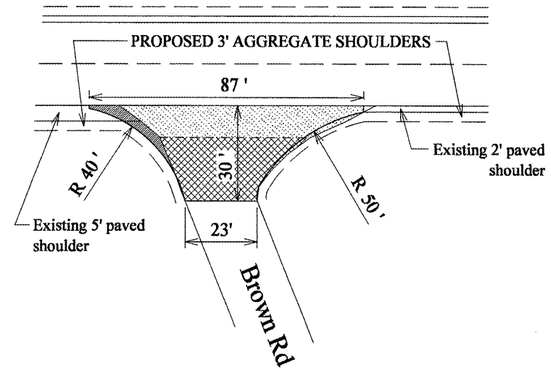

Brown Road and US 24

ITEMS	UNITS	QUANTITY
PREPARATION OF BASE	SQ YD	9.15
AGGREGATE BASE REPAIR	TON	4.17
HOT-MIX SURF. REM. BUTT JOINT	SQ YD	73.26
HOT-MIX SURF. REM. 3/4"	SQ YD	71.61
INCIDENTAL HOT-MIX SURFACING	TON	12.53

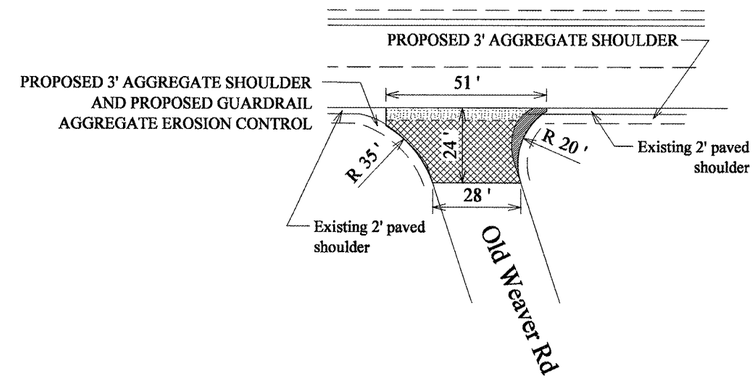

Old Weaver Road and US 24

ITEMS	UNITS	QUANTITY
PREPARATION OF BASE	SQ YD	8.31
AGGREGATE BASE REPAIR	TON	3.79
HOT-MIX SURF. REM. BUTT JOINT	SQ YD	71.34
HOT-MIX SURF. REM. 3/4"	SQ YD	19.56
INCIDENTAL HOT-MIX SURFACING	TON	8.34

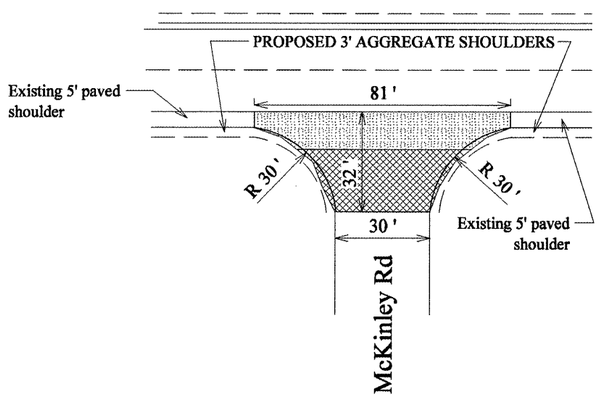

McKinley Road and US 24

ITEMS	UNITS	QUANTITY
PREPARATION OF BASE	SQ YD	0.00
AGGREGATE BASE REPAIR	TON	0.00
HOT-MIX SURF. REM. BUTT JOINT	SQ YD	88.44
HOT-MIX SURF. REM. 3/4"	SQ YD	96.00
INCIDENTAL HOT-MIX SURFACING	TON	14.67

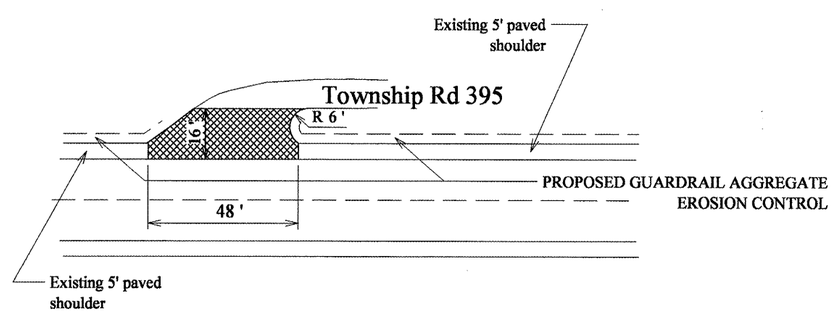

Township Road 395 and US 24

ITEMS	UNITS	QUANTITY
PREPARATION OF BASE	SQ YD	0.00
AGGREGATE BASE REPAIR	TON	0.00
HOT-MIX SURF. REM. BUTT JOINT	SQ YD	73.95
HOT-MIX SURF. REM. 3/4"	SQ YD	0.00
INCIDENTAL HOT-MIX SURFACING	TON	6.21

LEGEND:

- PREPARATION OF BASE
- HOT-MIX SURFACE REMOVAL BUTT JOINT
- HOT-MIX SURFACE REMOVAL 3/4"

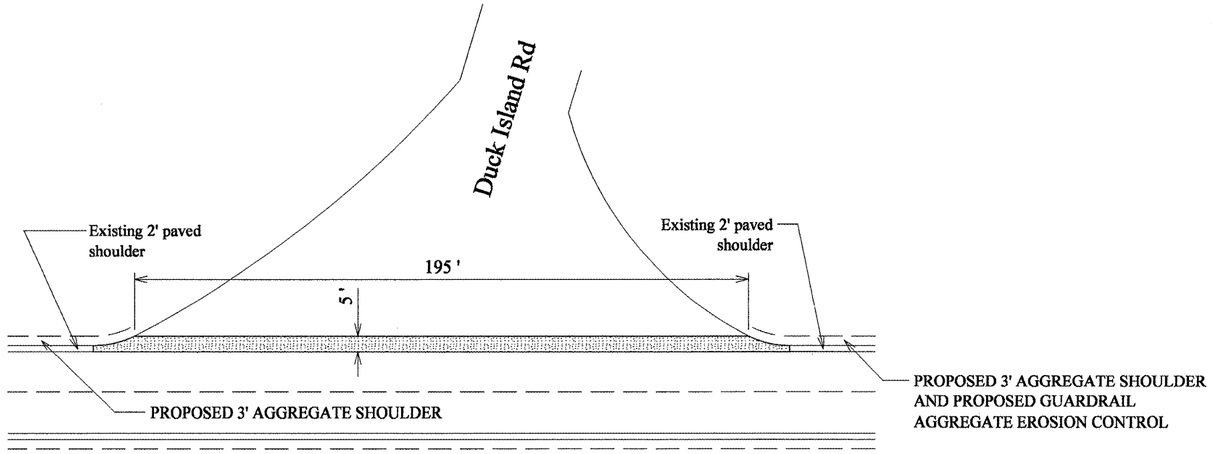

Duck Island Road and US 24

ITEMS	UNITS	QUANTITY
PREPARATION OF BASE	SQ YD	0.00
AGGREGATE BASE REPAIR	TON	0.00
HOT-MIX SURF. REM. BUTT JOINT	SQ YD	0.00
HOT-MIX SURF. REM. 3/4"	SQ YD	117.00
INCIDENTAL HOT-MIX SURFACING	TON	9.83

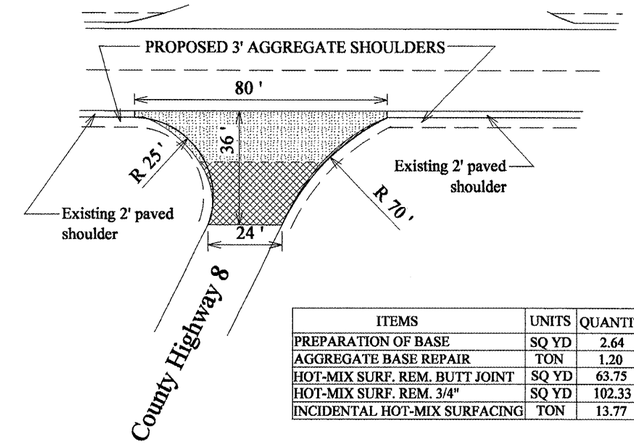

ITEMS	UNITS	QUANTITY
PREPARATION OF BASE	SQ YD	2.64
AGGREGATE BASE REPAIR	TON	1.20
HOT-MIX SURF. REM. BUTT JOINT	SQ YD	63.75
HOT-MIX SURF. REM. 3/4"	SQ YD	102.33
INCIDENTAL HOT-MIX SURFACING	TON	13.77

County Highway 8 and US 24

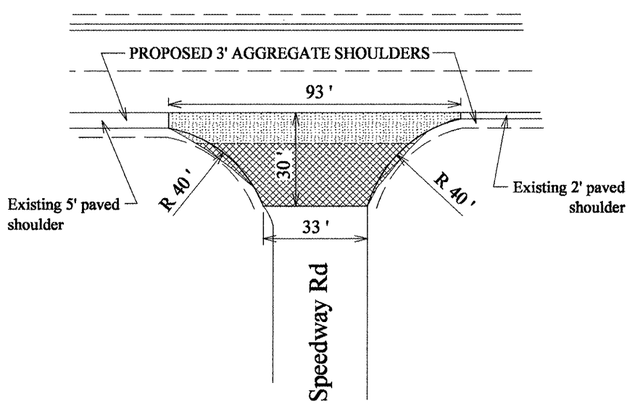

Speedway Road and US 24

ITEMS	UNITS	QUANTITY
PREPARATION OF BASE	SQ YD	0.15
AGGREGATE BASE REPAIR	TON	0.07
HOT-MIX SURF. REM. BUTT JOINT	SQ YD	107.19
HOT-MIX SURF. REM. 3/4"	SQ YD	92.07
INCIDENTAL HOT-MIX SURFACING	TON	15.90

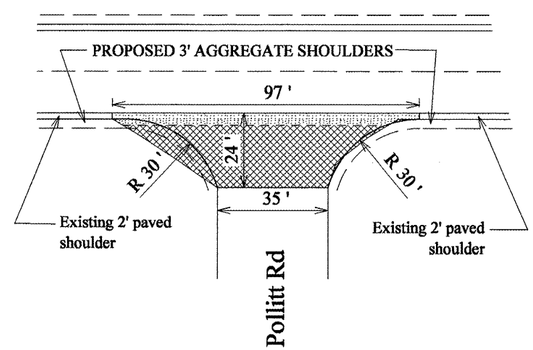

Pollitt Road and US 24

ITEMS	UNITS	QUANTITY
PREPARATION OF BASE	SQ YD	0.63
AGGREGATE BASE REPAIR	TON	0.29
HOT-MIX SURF. REM. BUTT JOINT	SQ YD	125.10
HOT-MIX SURF. REM. 3/4"	SQ YD	40.98
INCIDENTAL HOT-MIX SURFACING	TON	12.11

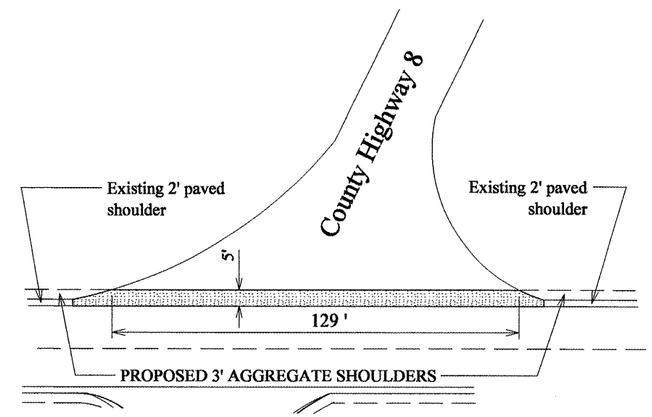

County Highway 8 and US 24

ITEMS	UNITS	QUANTITY
PREPARATION OF BASE	SQ YD	0.00
AGGREGATE BASE REPAIR	TON	0.00
HOT-MIX SURF. REM. BUTT JOINT	SQ YD	0.00
HOT-MIX SURF. REM. 3/4"	SQ YD	75.36
INCIDENTAL HOT-MIX SURFACING	TON	6.33

LEGEND:

- PREPARATION OF BASE
- HOT-MIX SURFACE REMOVAL BUTT JOINT
- HOT-MIX SURFACE REMOVAL 3/4"

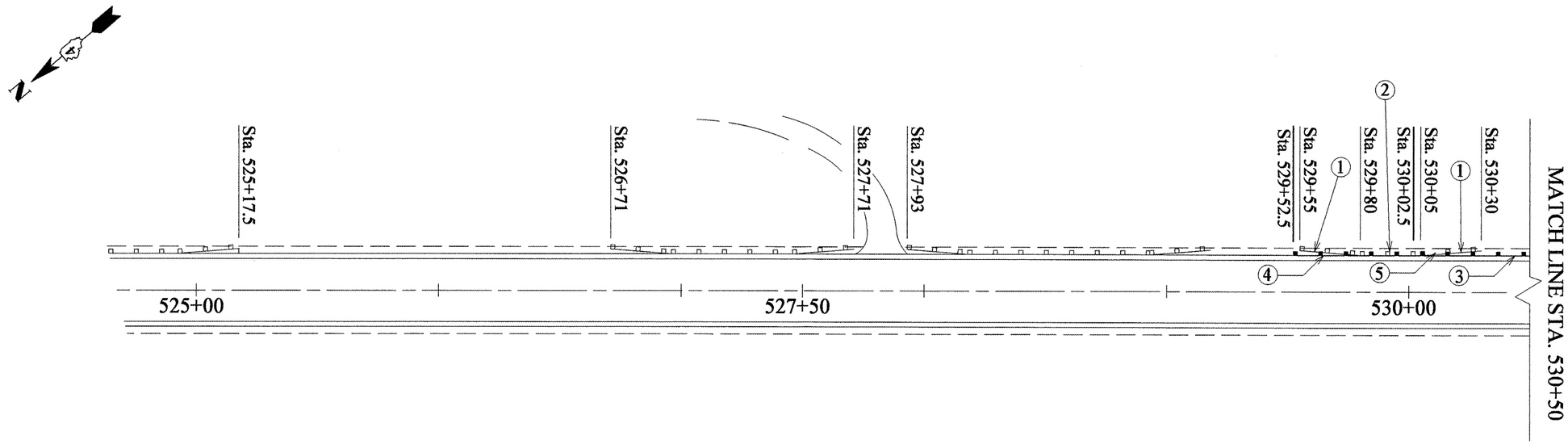

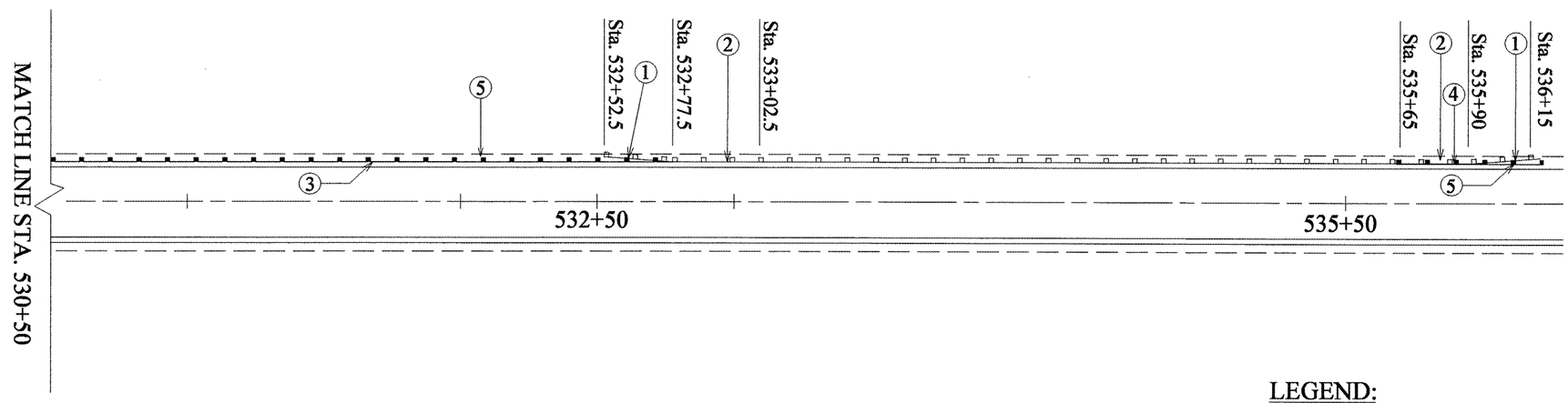

LEGEND:

1. TRAFFIC BARRIER TERMINAL REMOVAL, TYPE 1
2. GUARDRAIL REMOVAL
3. STEEL PLATE BEAM GUARDRAIL TYPE A
4. TRAFFIC BARRIER TERMINAL TYPE I, SPECIAL (TANGENT)
5. GUARDRAIL AGGREGATE EROSION CONTROL

FILE NAME = S:\GEN\DRAFT\STD&PLNS\SQUAD11\68337\68337A\plans.dgn	USER NAME = brucebm	DESIGNED -	REVISED -	STATE OF ILLINOIS DEPARTMENT OF TRANSPORTATION	GUARDRAIL IMPROVEMENT	F.A.P 317	SECTION	COUNTY	TOTAL SHEETS / SHEET NO.
		DRAWN -	REVISED -			US24	(137,102)RS-4; 101RS-3	FULTON	56 / 19
	PLOT SCALE = 44.2009 ' / IN.	CHECKED -	REVISED -					CONTRACT NO. 68337	
	PLOT DATE = 10/14/2008	DATE -	REVISED -		SCALE: SHEET NO. OF SHEETS STA. TO STA.	FED. ROAD DIST. NO.	ILLINOIS	FED. AID PROJECT	

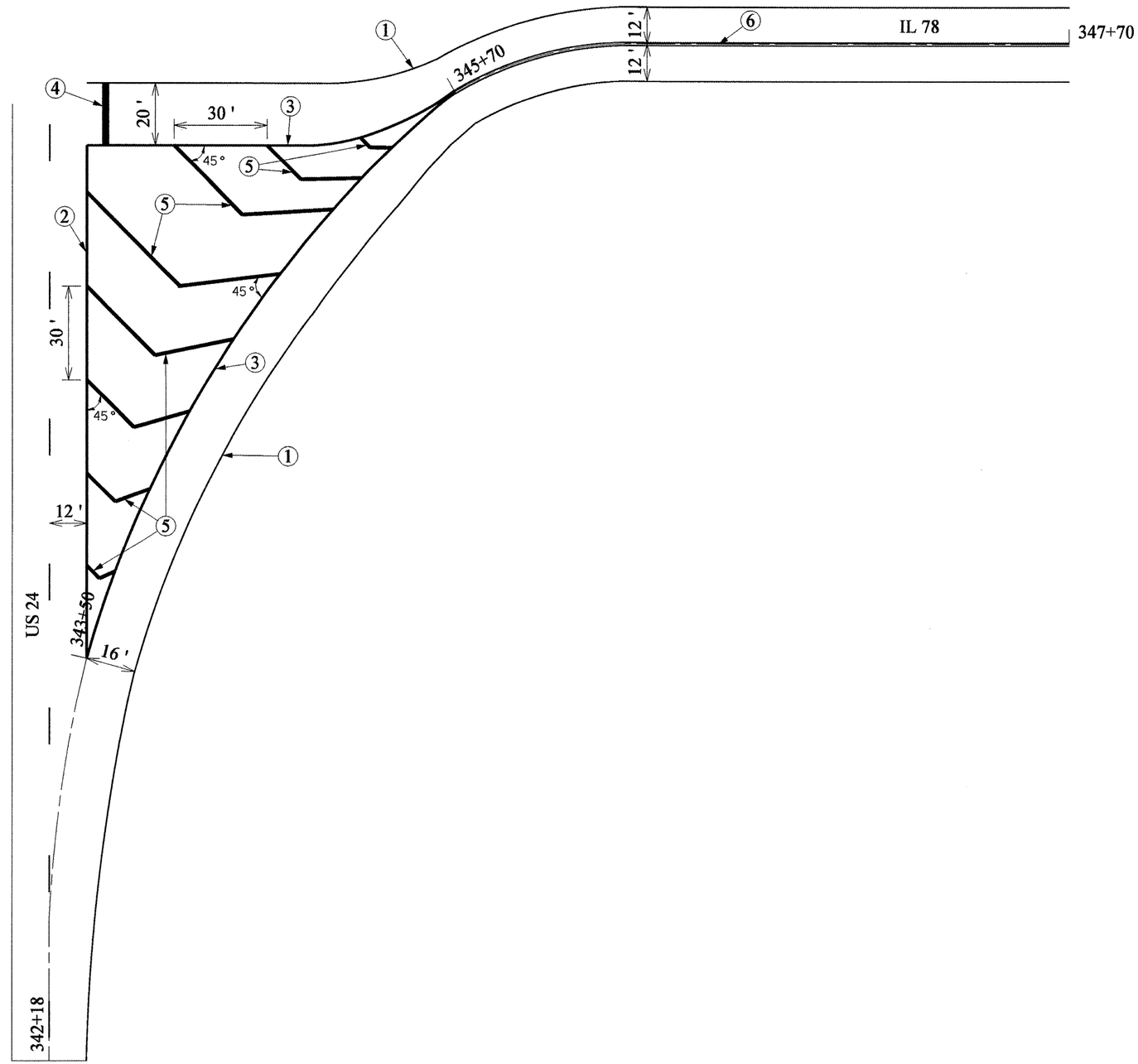

LEGEND:

① 4" Solid White
② 8" Solid White
③ 8" Solid Yellow
④ 12"Diagonal Yellow
⑤ 24" Stop Bar (White)
⑥ 4" Double Yellow

FILE NAME = S:\GEN\DRAFT\STD&PLNS\SQUAD11\68337\68337A\plans.dgn	USER NAME = brucebm	DESIGNED -	REVISED -	STATE OF ILLINOIS DEPARTMENT OF TRANSPORTATION	PAVEMENT MARKING DETAIL	F.A.P 317	SECTION	COUNTY	TOTAL SHEETS	SHEET NO.
	PLOT SCALE = 44.2009 ' / IN.	DRAWN -	REVISED -			US24	(137,102)RS-4; 101RS-3	FULTON	56	20
	PLOT DATE = 10/14/2008	CHECKED -	REVISED -					CONTRACT NO. 68337		
		DATE -	REVISED -		SCALE: SHEET NO. OF SHEETS STA. TO STA.	FED. ROAD DIST. NO.	ILLINOIS	FED. AID PROJECT		

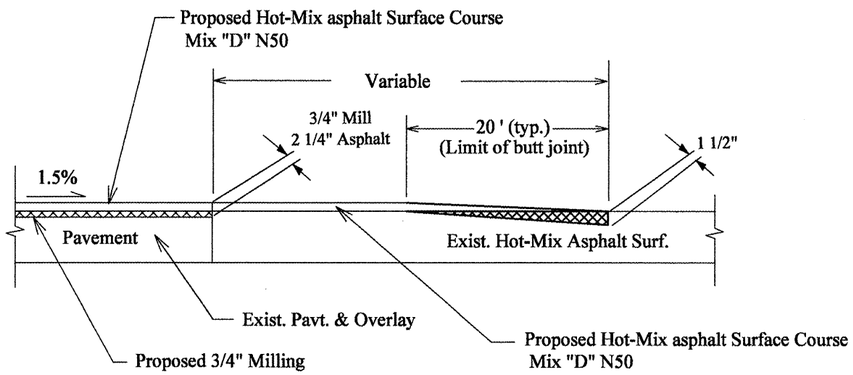

SIDEROADS

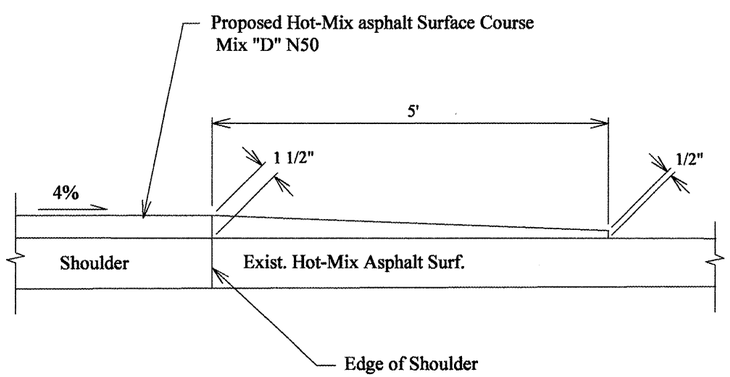

DRIVEWAYS AND MAILBOX TURNOUTS

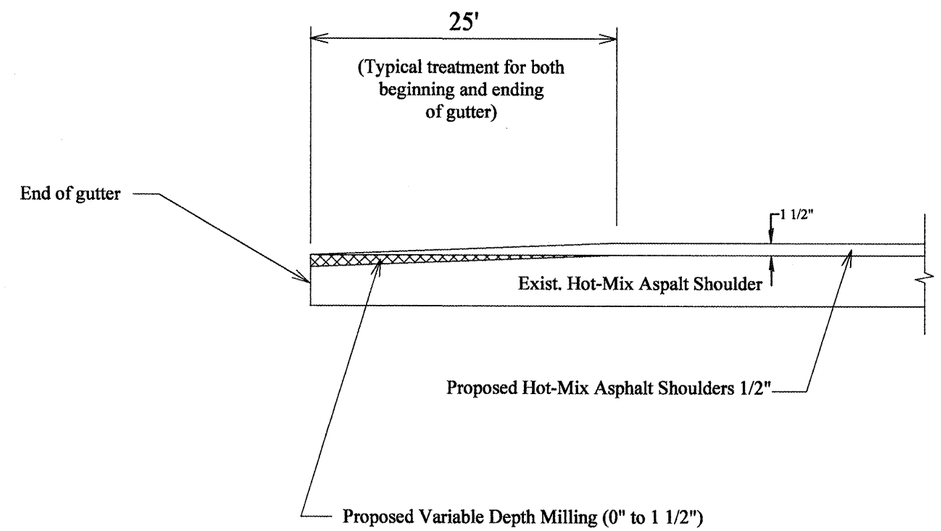

Refer to Typical Section #1 for location of existing gutter.

HOT-MIX ASPHALT SHOULDER TAPER DETAIL
(Not to Scale)

FILE NAME = S:\GEN\DRAFT\STD&PLNS\SQUAD11\68337\68337A\plans.dgn	USER NAME = brucebm	DESIGNED -	REVISED -	STATE OF ILLINOIS DEPARTMENT OF TRANSPORTATION	ENTRANCES, SIDEROADS, AND MAILBOX TURNOUTS DETAIL	F.A.P 317	SECTION	COUNTY	TOTAL SHEETS	SHEET NO.
		DRAWN -	REVISED -			US24	(137,102)RS-4; 101RS-3	FULTON	56	21
	PLOT SCALE = 44.2009 ' / IN.	CHECKED -	REVISED -					CONTRACT NO. 68337		
	PLOT DATE = 10/14/2008	DATE -	REVISED -		SCALE: SHEET NO. OF SHEETS STA. TO STA.	FED. ROAD DIST. NO.	ILLINOIS	FED. AID PROJECT		

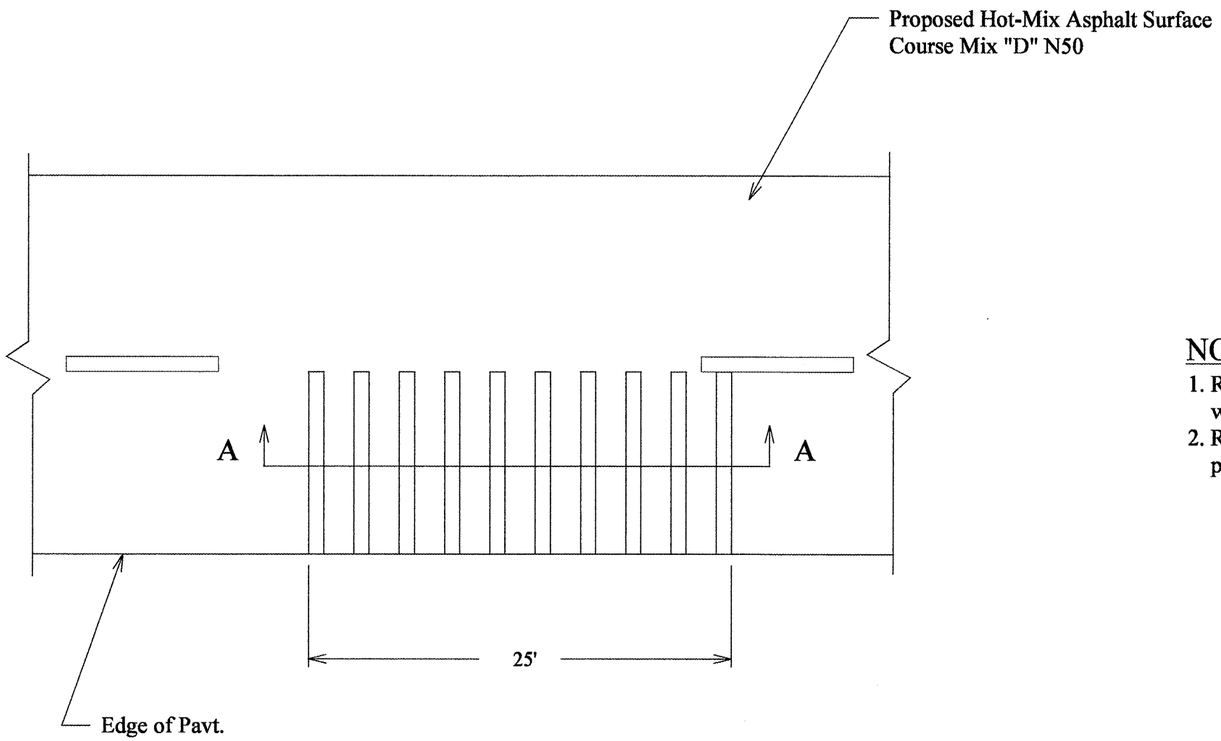

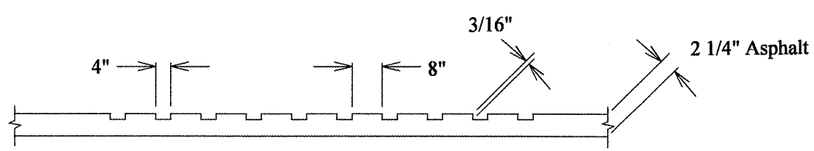

SECTION A-A

NOTES:

1. Rumble strip will be paid for per square yard of grooved area which includes all labor and equipment necessary to do the work.
2. Rumble strips are to be grooved into the pavement after placement of the Hot-Mix Asphalt Surf. Cse.

LOCATIONS:

Lt Sta. 8+31 to 8+56
Lt Sta. 8+84 to 9+09
Lt Sta. 10+31 to 10+56
Lt Sta. 11+05 to 11+30
Lt Sta. 14+47 to 14+72
LtSta. 16+75 to 17+00

FILE NAME = S:\GEN\DRAFT\STD&PLNS\SQUAD11\68337\68337A\plans.dgn	USER NAME = brucebm	DESIGNED -	REVISED -	STATE OF ILLINOIS DEPARTMENT OF TRANSPORTATION	RUMBLE STRIP DETAIL	F.A.P 317	SECTION	COUNTY	TOTAL SHEETS / SHEET NO.
	PLOT SCALE = 44.2009 ' / IN.	DRAWN -	REVISED -			US24	(137,102)RS-4; 101RS-3	FULTON	56 / 22
	PLOT DATE = 10/14/2008	CHECKED -	REVISED -					CONTRACT NO. 68337	
		DATE -	REVISED -		SCALE: SHEET NO. OF SHEETS STA. TO STA.	FED. ROAD DIST. NO.	ILLINOIS	FED. AID PROJECT	

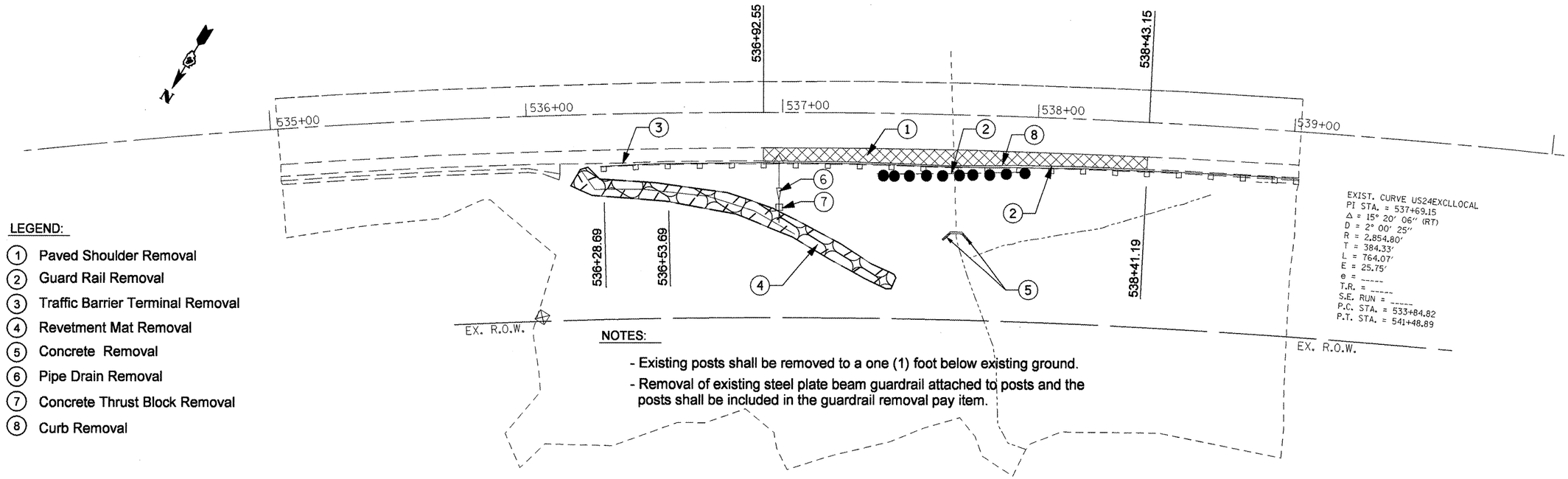

LEGEND:

1. Paved Shoulder Removal
2. Guard Rail Removal
3. Traffic Barrier Terminal Removal
4. Revetment Mat Removal
5. Concrete Removal
6. Pipe Drain Removal
7. Concrete Thrust Block Removal
8. Curb Removal

NOTES:

- Existing posts shall be removed to a one (1) foot below existing ground.
- Removal of existing steel plate beam guardrail attached to posts and the posts shall be included in the guardrail removal pay item.

PLAN		BY	DATE
NOTE BOOK NO.	SURVEYED		
	PLOTTED		
	ALIGNMENT CHECKED		
	RT. OF WAY CHECKED		
	2000 FILE NAME		

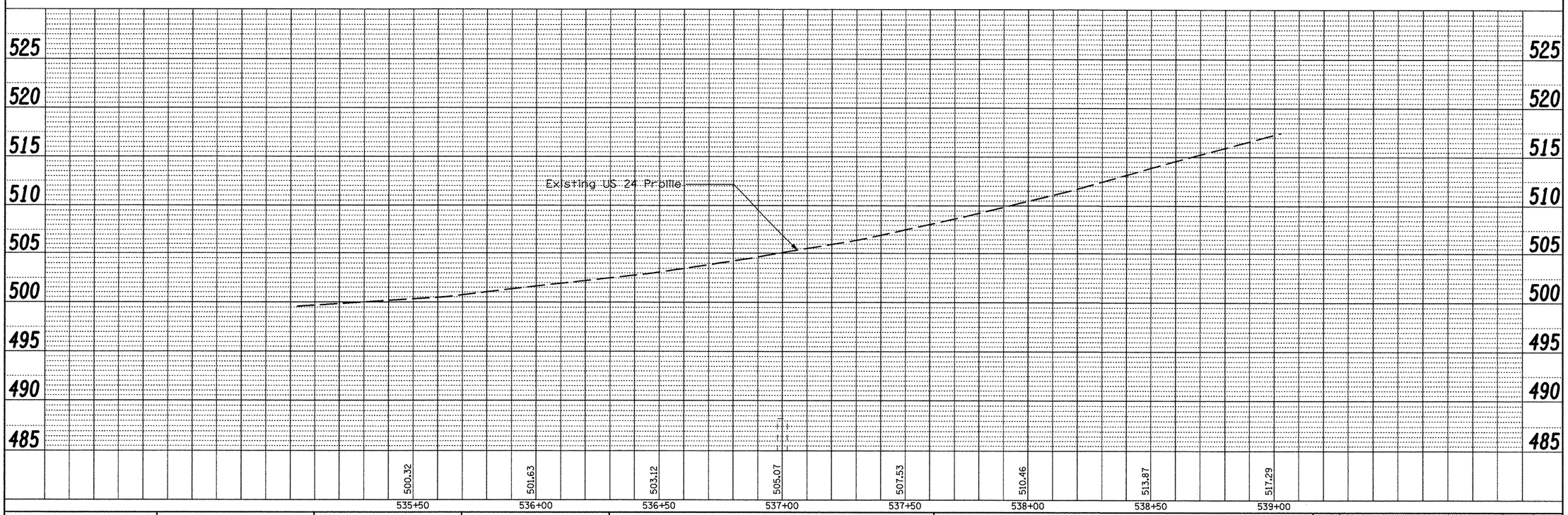

PROFILE		BY	DATE
NOTE BOOK NO.	SURVEYED		
	PLOTTED		
	GRADES CHECKED		
	B.M. NOTED		
	STRUCTURE NOTATIONS CHKD		

FILE NAME = c:\projects\us24illam\existing sht.dgn	USER NAME = crespole	DESIGNED -	REVISED -
		DRAWN -	REVISED -
	PLOT SCALE = 40.0000 ' / IN.	CHECKED -	REVISED -
	PLOT DATE = 10/14/2008	DATE -	REVISED -

STATE OF ILLINOIS
DEPARTMENT OF TRANSPORTATION

Removal Plan –US 24 Culvert Extension

SCALE: | SHEET NO. OF SHEETS | STA. TO STA.

F.A.P RTE.	SECTION	COUNTY	TOTAL SHEETS	SHEET NO.
317	(137,102)RS-4\101RS-3	FULTON	56	23
		CONTRACT NO. 68337		

FED. ROAD DIST. NO. 4 | ILLINOIS | FED. AID PROJECT

LEGEND:

1. Hot Mix Asphalt Shoulder, 8"
2. Steel Plate Beam Guard Rail, Type A
3. Type C Inlet Box, Standard 609001 (Special)
4. Guardrail Aggregate Erosion Control
5. Traffic Barrier Terminal, Type 1 (Special), Tangent
6. Fabric Formed Concrete Revetment Mat
7. Pipe Drains 12"
8. Concrete Thrust Blocks
9. Metal End Section 12"
10. Stone Riprap, Class A4
11. Concrete Box Culvert
12. Heavy Duty Erosion Control Blanket
13. Hot- Mix Asphalt Shoulder Curb
14. Concrete Collar

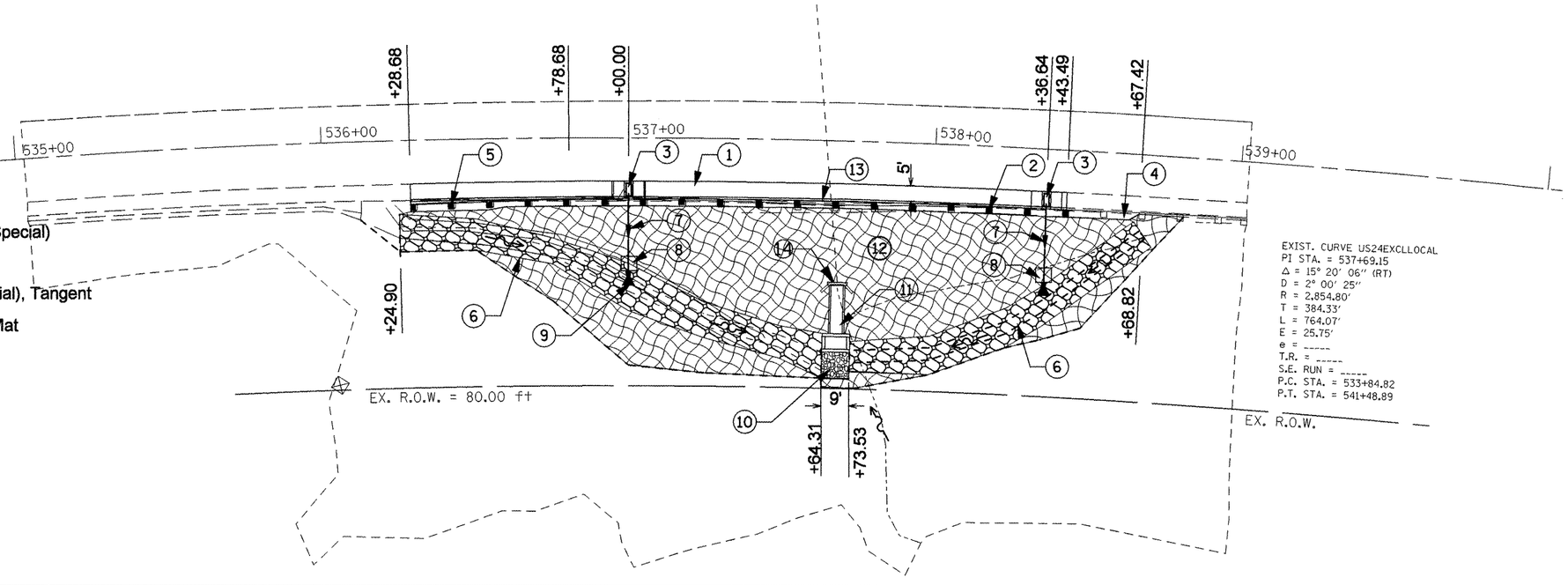

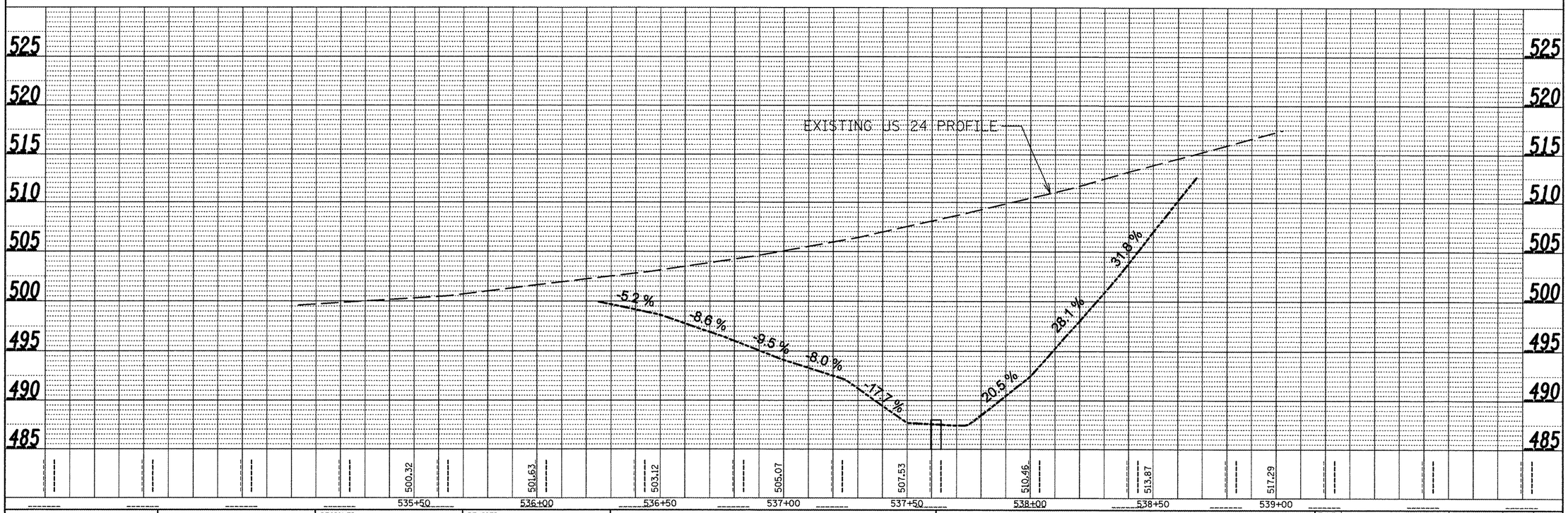

PLAN
NOTE BOOK NO. ____
SURVEYED ____
PLOTTED ____
ALIGNMENT CHECKED ____
RT. OF WAY CHECKED ____
BOND FILE NAME ____
BY
DATE

PROFILE
NOTE BOOK NO. ____
SURVEYED ____
PLOTTED ____
GRADES CHECKED ____
B.M. NOTED ____
STRUCTURE NOTATNS CHKED ____
BY
DATE

FILE NAME = c:\projects\us24illam\p&psheet.dgn	USER NAME = crespole	DESIGNED - ___	REVISED - ___	STATE OF ILLINOIS DEPARTMENT OF TRANSPORTATION	US 24 Culvert Extension Rt. Sta. 537 + 68.90
		DRAWN - ___	REVISED - ___		
	PLOT SCALE = 40.0000 ' / IN.	CHECKED - ___	REVISED - ___		
	PLOT DATE = 10/14/2008	DATE - _____	REVISED - ___		SCALE: _____ SHEET NO. __ OF ___ SHEETS STA. _____ TO STA. _____

F.A.P RTE.	SECTION	COUNTY	TOTAL SHEETS	SHEET NO.
317	(137,102)BS-4101BS-3	FULTON	56	24
		CONTRACT NO. 68337		

FED. ROAD DIST. NO. 4 | ILLINOIS | FED. AID PROJECT

DESIGNER NOTES: 1. CHECK WITH THE DISTRICT GEOTECHNICAL ENGINEER FOR USE OF THIS DRAWING AND FOR UNDERCUT DEPTHS IF NOT PROVIDED OR SHOWN IN PROJECT SOILS REPORT.
2. ASSURE TREATMENT AREAS ARE SHOWN IN PLANS AND ON CROSS SECTIONS.
3. INCLUDE SOIL BORINGS FOR TREATED AREAS.

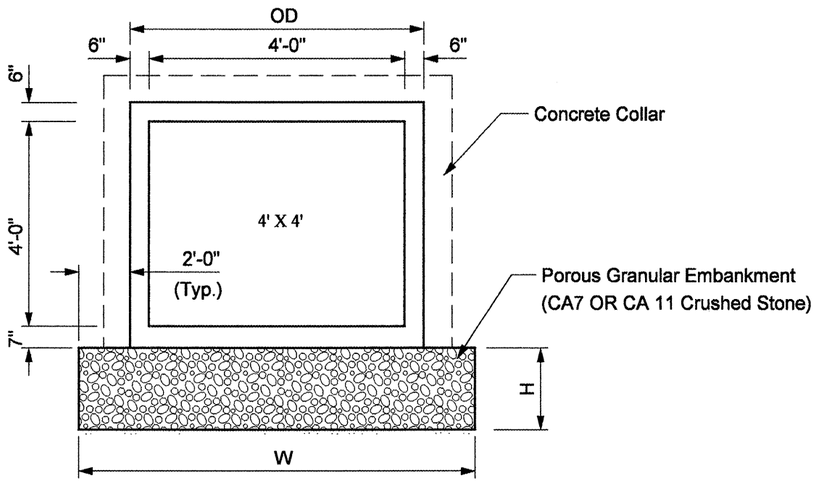

ALTERNATIVE I: FOR 12" TO 18" UNDERCUT

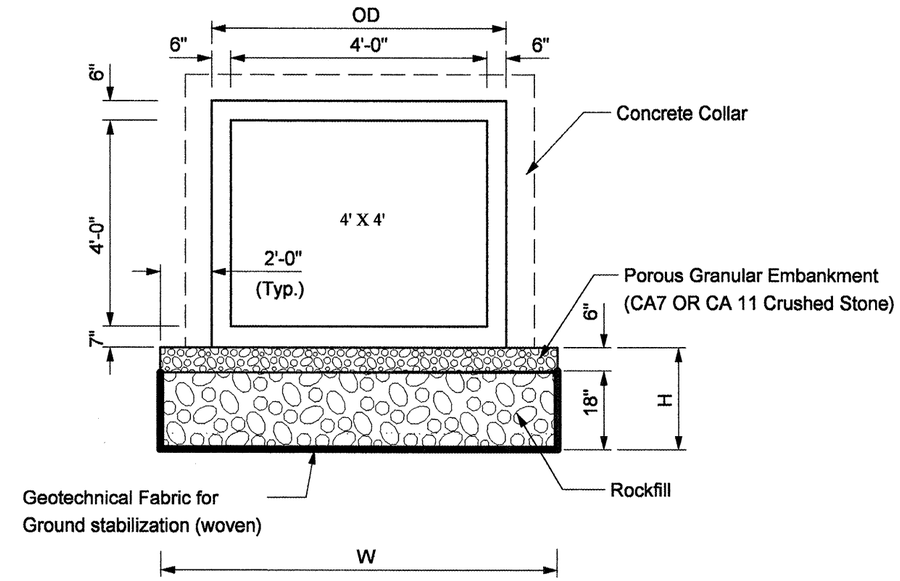

ALTERNATIVE II: FOR 18" TO 36" UNDERCUT

CULVERT LOCATION	UNDERCUT		
	DEPTH	WIDTH	LENGTH
	h	W	L
RT. STA. 537+68.90	18"	9'-0"	21'-11"

GENERAL NOTES:

1. Undercut if the Dynamic Cone Penetrometer tests indicate soil strength is less than 1 ton/sq ft.

2. DEFINITIONS:
   OD = Outside Diameter or outside width of box culvert
   h = Depth of undercut (for precast box culverts, the upper 6" is included in the cost of culvert).
   x = h or min. width specified in Sec. 542.04, which ever is greater for pipe culverts.
   x = h or minimum 2 feet, which ever is greater for box culverts.
   W = Width of undercut

3. For undercuts greater than 36", use Alternate II with undercut treatments as directed by the District Geotechnical Engineer.

All dimensions are in inches (millimeters) unless otherwise noted.

FILE NAME = c:\projects\us241ilam\plan01-2d.dgn	USER NAME = crespole	DESIGNED - ___	REVISED - ___	STATE OF ILLINOIS DEPARTMENT OF TRANSPORTATION	UNSUITABLE EXCAVATION TREATMENT FOR CULVERTS	F.A.P RTE.	SECTION	COUNTY	TOTAL SHEETS	SHEET NO.
		DRAWN - ___	REVISED - ___			317	(137,102)RS-4(101)RS-3	FULTON	56	25
	PLOT SCALE = 2.0091 ' / IN.	CHECKED - ___	REVISED - ___			CONTRACT NO. 68337				
	PLOT DATE = 10/14/2008	DATE - _____	REVISED - ___		SCALE: _____ SHEET NO. __ OF __ SHEETS STA. _____ TO STA. _____	FED. ROAD DIST. NO. 4	ILLINOIS	FED. AID PROJECT		

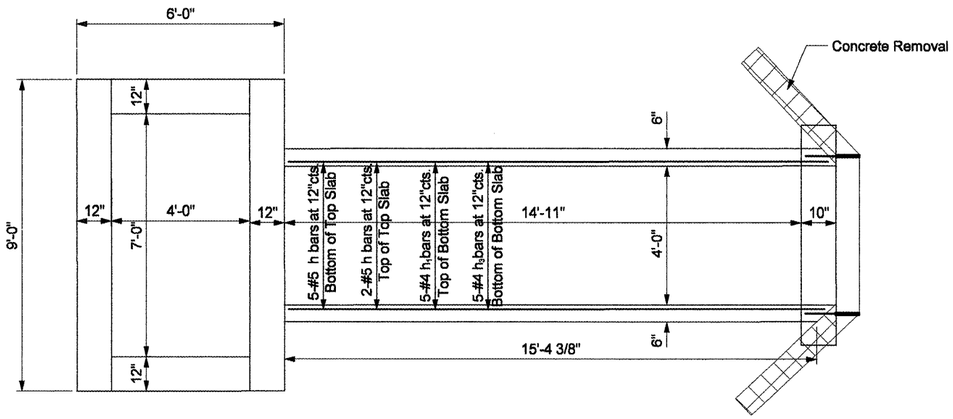

PLAN SHOWING OUTLINES
RT. STA. 537+68.90

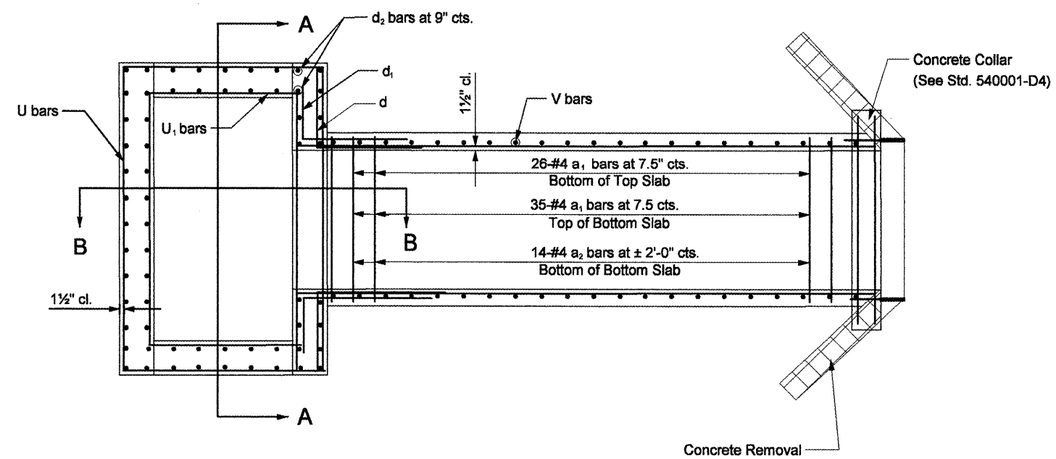

PLAN SHOWING REINFORCEMENT
RT. STA. 537+68.90

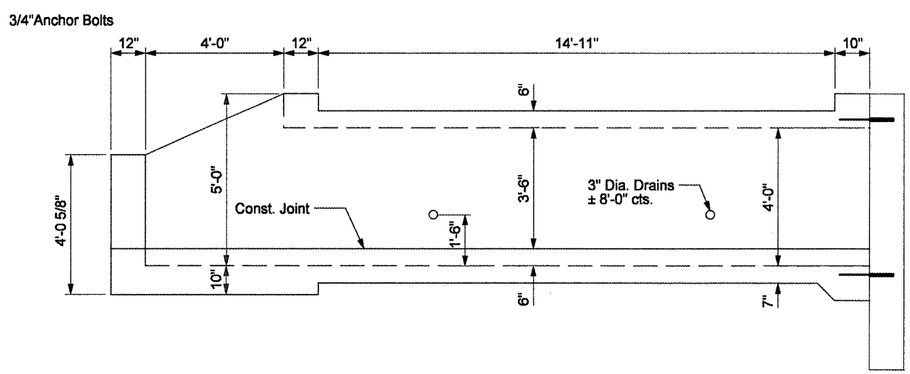

ELEVATION
RT. STA. 537+68.90

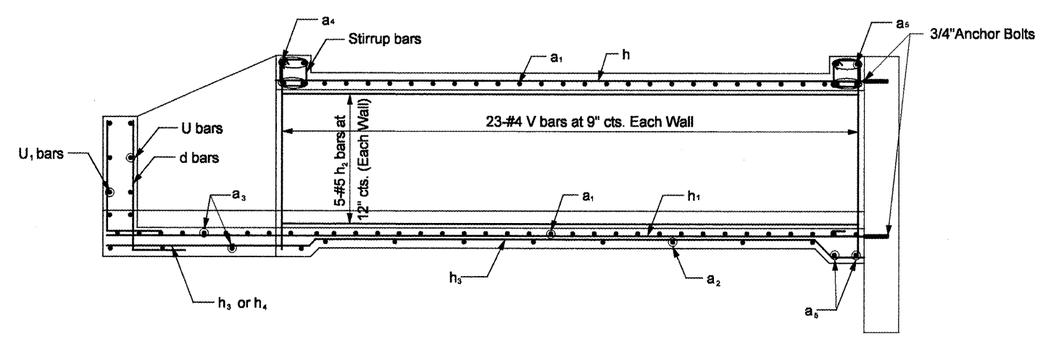

ELEVATION SHOWING REINFORCEMENT
RT. STA. 537+68.90

FILE NAME = c:\projects\us241ilam\culvert detail.dgn	USER NAME = crespolo	DESIGNED - ___	REVISED - ___	STATE OF ILLINOIS DEPARTMENT OF TRANSPORTATION	CULVERT EXTENSION DETAILS	F.A.P. RTE.	SECTION	COUNTY	TOTAL SHEETS / SHEET NO.
		DRAWN - ___	REVISED - ___			317	(137,102)-BS-4(101)BS-3	FULTON	56 / 26
	PLOT SCALE = 4.0183 ' / IN.	CHECKED - ___	REVISED - ___					CONTRACT NO. 68337	
	PLOT DATE = 10/14/2008	DATE - _____	REVISED - ___		SCALE: _____ SHEET NO. __ OF ___ SHEETS STA. _____ TO STA. _____	FED. ROAD DIST. NO. _	ILLINOIS	FED. AID PROJECT	

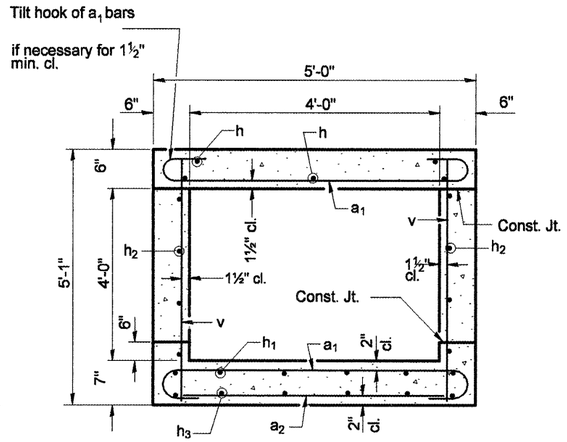

SECTION THRU BARREL

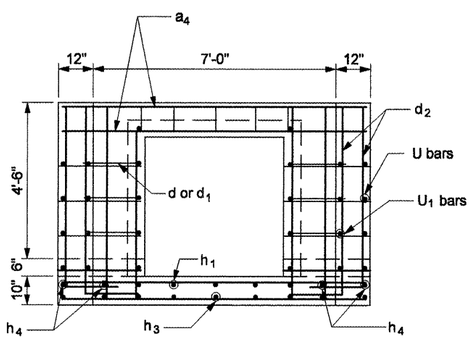

SECTION A-A

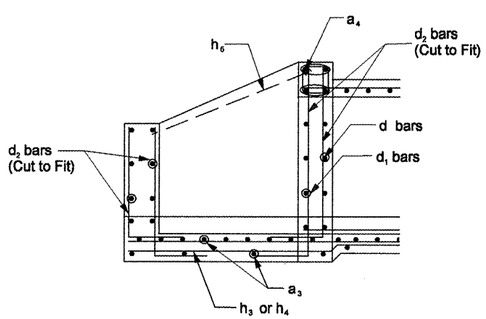

SECTION B-B

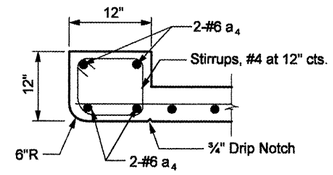

SECTION THRU HEADWALL

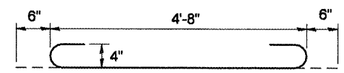

BAR a

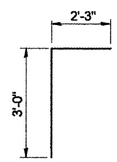

BAR d

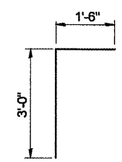

BAR d_1

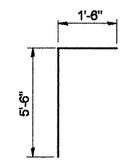

BAR d_2

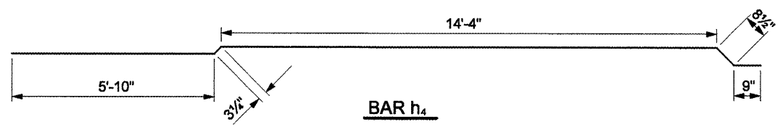

BAR h_4

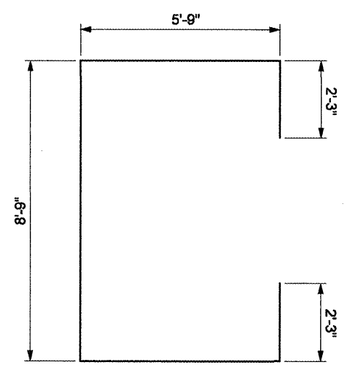

BARS U

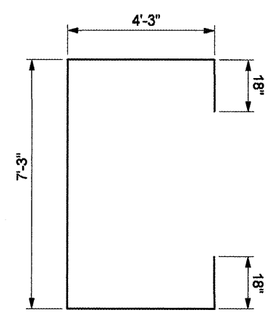

BARS U_1

BILL OF MATERIAL

Bar	No.	Size	Length	Shape
a_1	51	#4	5'-8"	
a_2	9	#4	4'-4"	
a_3	12	#4	8'-8"	
a_4	4	#6	8'-8"	
a_5	6	#6	6'-0"	
d	8	#4	5'-3"	
d_1	8	#4	4'-6"	
d_2	62	#4	7'-0"	
h	7	#5	15'-6 ¾"	
h_1	5	#4	21'-2"	
h_2	10	#5	16'-7"	
h_3	5	#4	20'-11"	
h_4	4	#4	4'-9"	
h_5	2	#4	4'-11"	
S	12	#4	3'-9"	
U	4	#4	24'-10"	
U_1	4	#4	18'-9"	
V	46	#4	4'-9"	
3/4" Anchor Bolts			Each	12
Concrete Box Culverts			Cu. Yd.	10
Reinforcement Bars			Pound	1,476.00

DESIGN STRESSES

fy = 60,000 psi

f'c = 3,500 psi

FILE NAME = c:\projects\us24ilam\culvert detail.dgn	USER NAME = crespole	DESIGNED - ___	REVISED - ___
		DRAWN - ___	REVISED - ___
	PLOT SCALE = 4.0183 ' / IN.	CHECKED - ___	REVISED - ___
	PLOT DATE = 10/14/2008	DATE - _____	REVISED - ___

STATE OF ILLINOIS
DEPARTMENT OF TRANSPORTATION

CULVERT EXTENSION DETAILS

SCALE: _____ SHEET NO. __ OF ___ SHEETS STA. _____ TO STA. _____

F.A.P. RTE.	SECTION	COUNTY	TOTAL SHEETS	SHEET NO.
317	(137,102) BS-4:101BS-3	FULTON	56	27

CONTRACT NO. 68337

FED. ROAD DIST. NO. 4 | ILLINOIS | FED. AID PROJECT

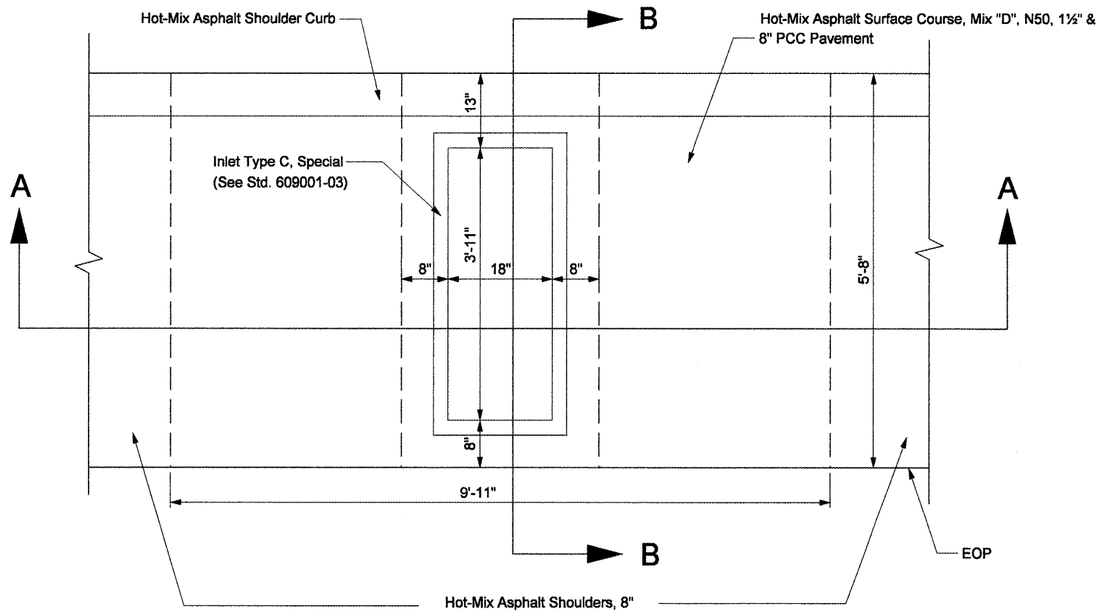

TYPICAL DETAIL PLAN

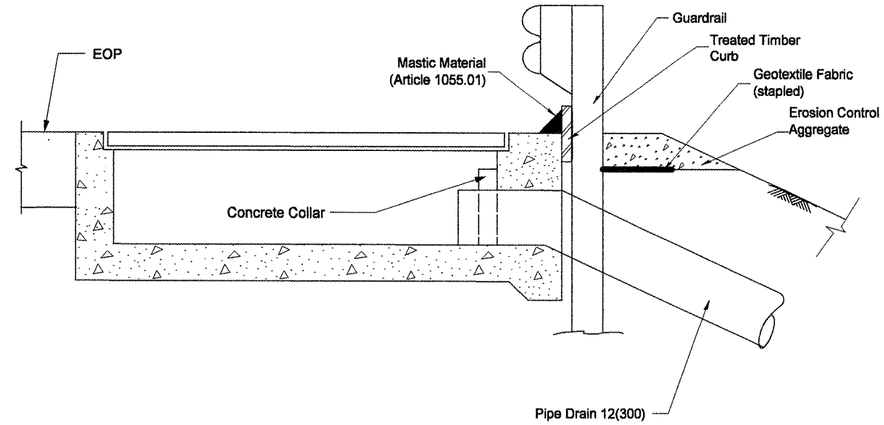

SECTION B-B

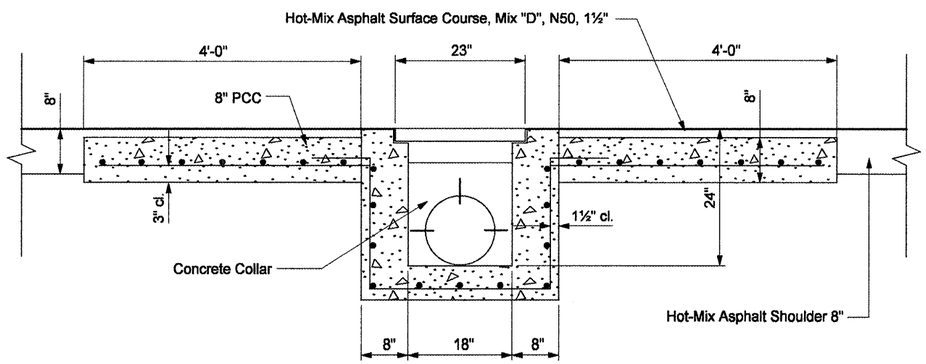

SECTION A-A

Note: See Std. 609001 for reinforcement & frame & grate details

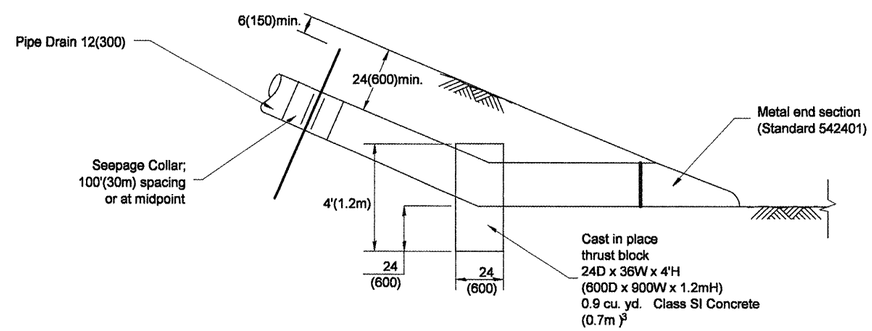

GENERAL NOTES

1. The material for Pipe Drains shall be bituminous coated galvanized corrugated steel culvert pipe or bituminous coated corrugated aluminum alloy pipe in accordance with Article 601.02(f) or 601.02(i).
2. An approved mastic material (Article 1055.01) shall be applied to the inside of the connecting bands.
3. The contract unit price "Each" for Inlet Type C, Special shall include the 8" PCC shoulder, frame & grate, reinforcement and all work necessary to build the inlet.

DESIGNER NOTES:

2. INCLUDE STATE STANDARDS 609001, 609006 OR 610001, IF APPLICABLE
3. INCLUDE DISTRICT CADD STANDARDS FOR "GUARDRAIL EROSION CONTROL TREATMENTS", "SEEPAGE COLLARS FOR BURIED PIPES", AND "PIPE ELBOW"

All dimensions are in inches (millimeters) unless otherwise noted.

STATE OF ILLINOIS
DEPARTMENT OF TRANSPORTATION

TYPE C INLET BOX, STANDARD 609001 (SPECIAL)

NOT TO SCALE

F.A.P RTE.	SECTION	COUNTY	TOTAL SHEETS	SHEET NO.
317	(137,102)RS-4, 101RS-3	FULTON	56	28
		CONTRACT NO. 68337		
FED. ROAD DIST. NO. 4	ILLINOIS	FED. AID PROJECT		

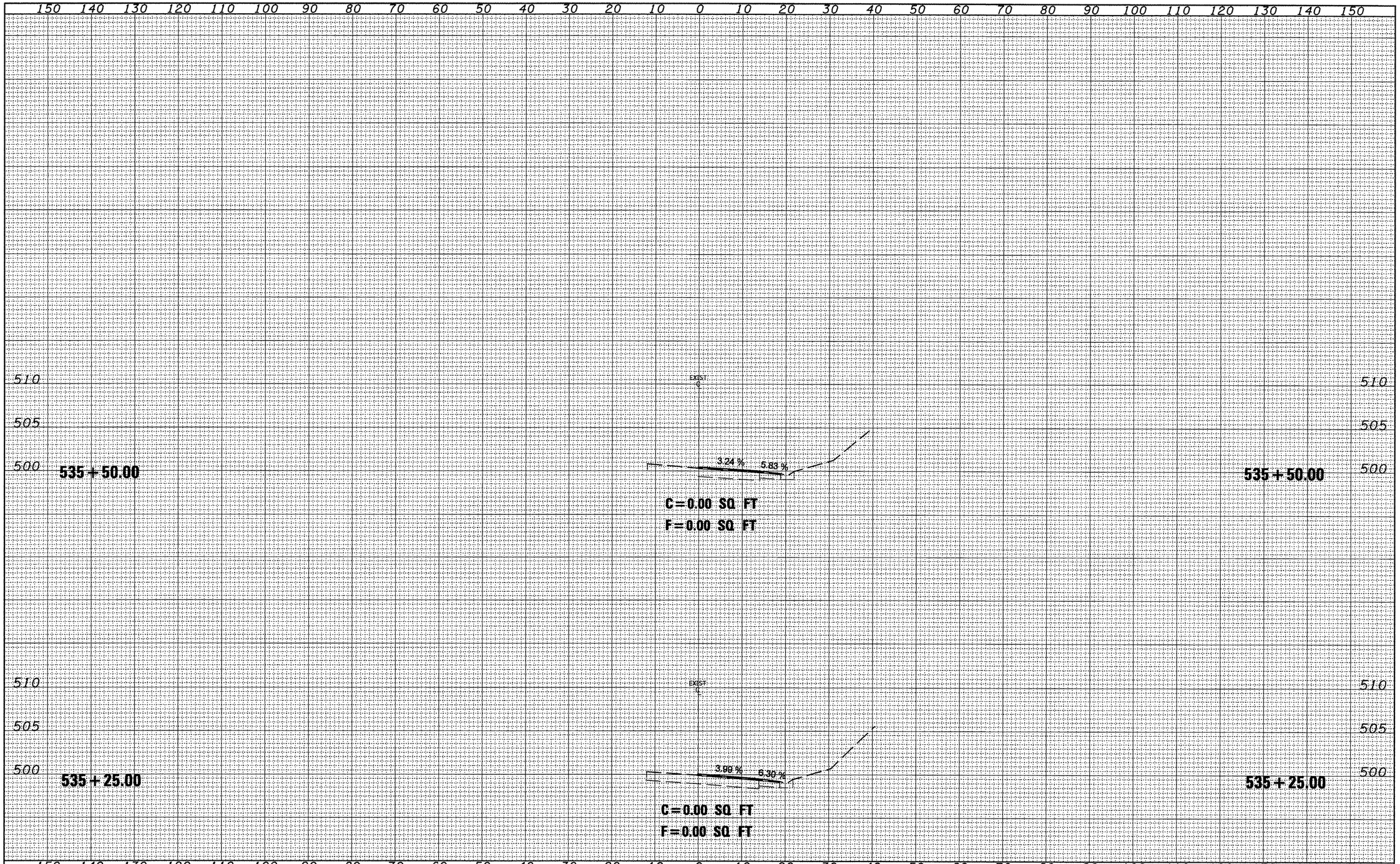

FINAL SURVEY		BY	DATE
NOTE BOOK	SURVEYED		
	PLOTTED		
	TEMPLATE		
	AREAS		
NO.	AREAS CHECKED		

ORIGINAL SURVEY		BY	DATE
NOTE BOOK	SURVEYED		
	PLOTTED		
	TEMPLATE		
	AREAS		
NO.	AREAS CHECKED		

FILE NAME = c:\projects\us241ilsm\xsheet.dgn	USER NAME = crespole	DESIGNED -	REVISED -
		DRAWN -	REVISED -
	PLOT SCALE = 20.0000 ' / IN.	CHECKED -	REVISED -
	PLOT DATE = 10/14/2008	DATE -	REVISED -

STATE OF ILLINOIS
DEPARTMENT OF TRANSPORTATION

US 24 CULVERT EXTENSION CROSS SECTION

SCALE: | SHEET NO. OF SHEETS | STA. 535+25.00 TO STA. 535+50.00

F.A.P RTE.	SECTION	COUNTY	TOTAL SHEETS	SHEET NO.
317	(107,102)RS-4; 101RS-3	FULTON	56	29

CONTRACT NO. 68337

FED. ROAD DIST. NO. 4 | ILLINOIS | FED. AID PROJECT

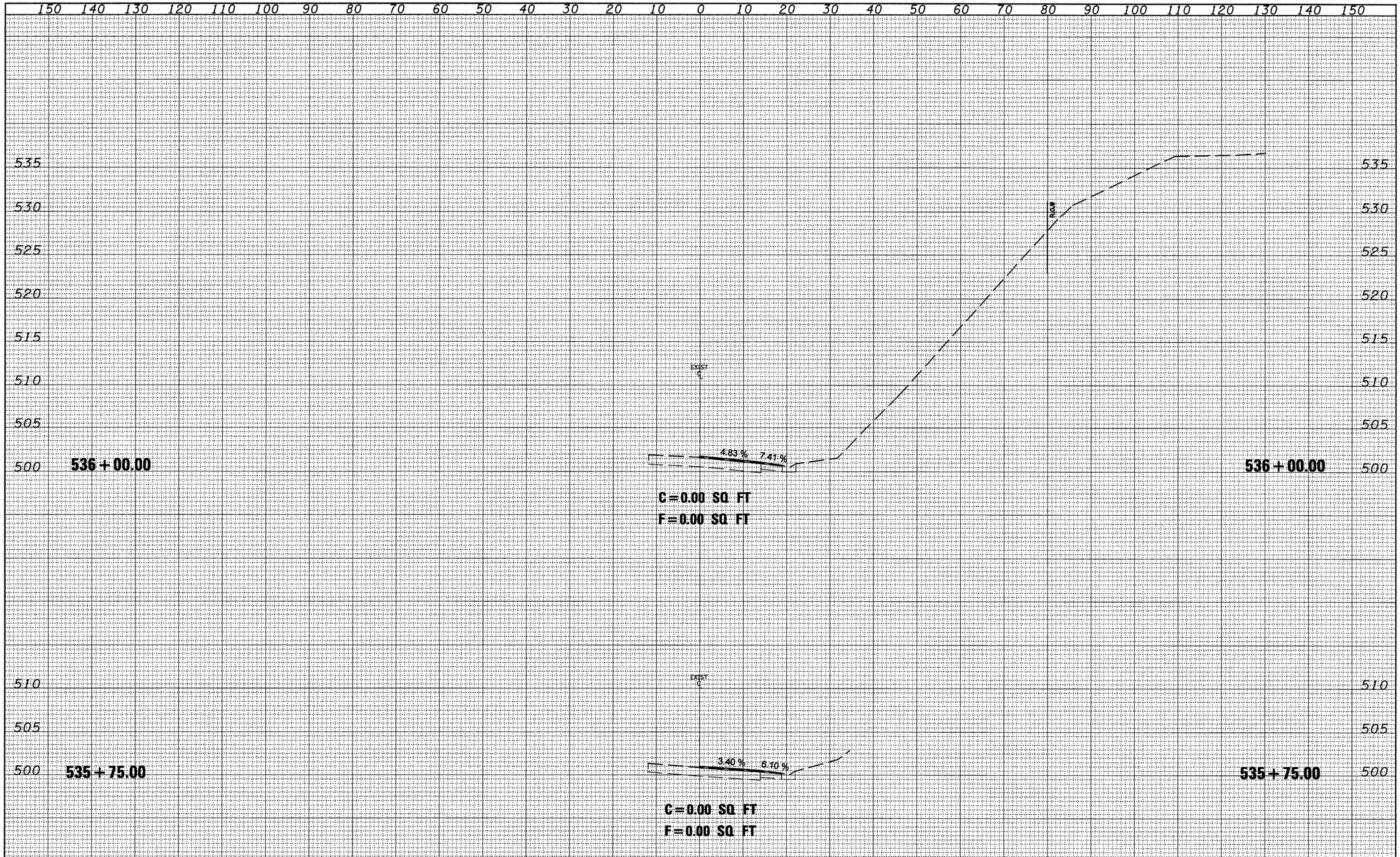

FINAL SURVEY	BY	DATE
SURVEYED		
PLOTTED		
TEMPLATE		
AREAS		
AREAS CHECKED		
NOTE BOOK NO.		

ORIGINAL SURVEY	BY	DATE
SURVEYED		
PLOTTED		
TEMPLATE		
AREAS		
AREAS CHECKED		
NOTE BOOK NO.		

FILE NAME = c:\projects\us24illam\xssheet.dgn	USER NAME = crespole	DESIGNED -	REVISED -
		DRAWN -	REVISED -
	PLOT SCALE = 20.0000 ' / IN.	CHECKED -	REVISED -
	PLOT DATE = 10/14/2008	DATE -	REVISED -

STATE OF ILLINOIS
DEPARTMENT OF TRANSPORTATION

US 24 CULVERT EXTENSION CROSS SECTION

SCALE: | SHEET NO. OF SHEETS | STA. 535+75.00 TO STA. 536+00.00

F.A.P RTE.	SECTION	COUNTY	TOTAL SHEETS	SHEET NO.
317	(137,102)RS-4;101RS-3	FULTON	56	30

CONTRACT NO. 68337

FED. ROAD DIST. NO. 4 | ILLINOIS | FED. AID PROJECT

FINAL SURVEY		BY	DATE
NOTE BOOK	SURVEYED		
	PLOTTED		
	TEMPLATE		
	AREAS		
NO.	AREAS CHECKED		

ORIGINAL SURVEY		BY	DATE
NOTE BOOK	SURVEYED		
	PLOTTED		
	TEMPLATE		
	AREAS		
NO.	AREAS CHECKED		

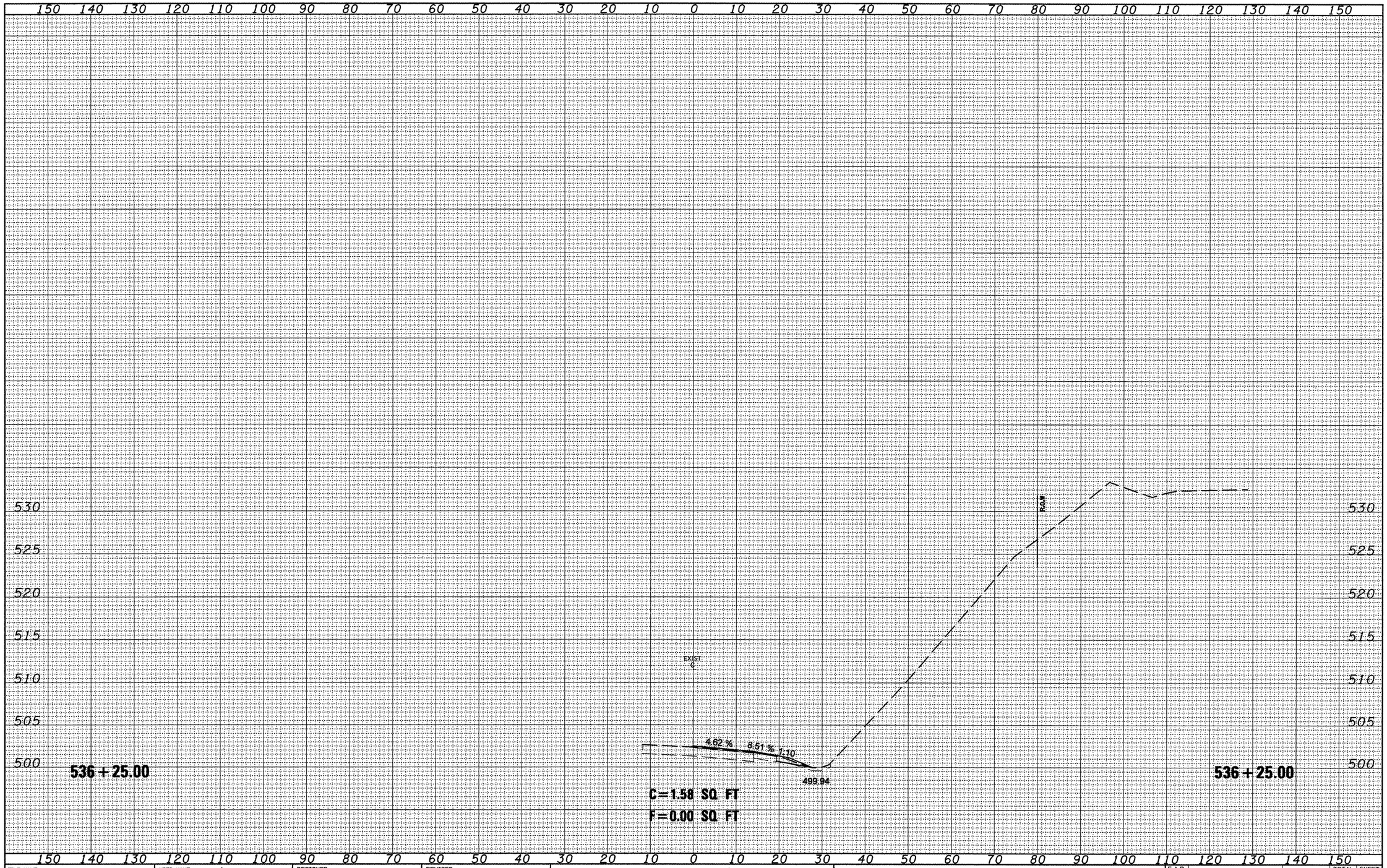

FILE NAME = c:\projects\us241lam\xssheet.dgn	USER NAME = crespole	DESIGNED -	REVISED -
		DRAWN -	REVISED -
	PLOT SCALE = 20.0000 ' / IN.	CHECKED -	REVISED -
	PLOT DATE = 10/14/2008	DATE -	REVISED -

STATE OF ILLINOIS
DEPARTMENT OF TRANSPORTATION

US 24 CULVERT EXTENSION CROSS SECTION

SCALE: | SHEET NO. OF SHEETS | STA. 536+25.00 TO STA. 536+25.00

F.A.P RTE.	SECTION	COUNTY	TOTAL SHEETS	SHEET NO.
317	(137,102)RS-4;101RS-3	FULTON	56	31

CONTRACT NO. 68337

FED. ROAD DIST. NO. 4 | ILLINOIS | FED. AID PROJECT

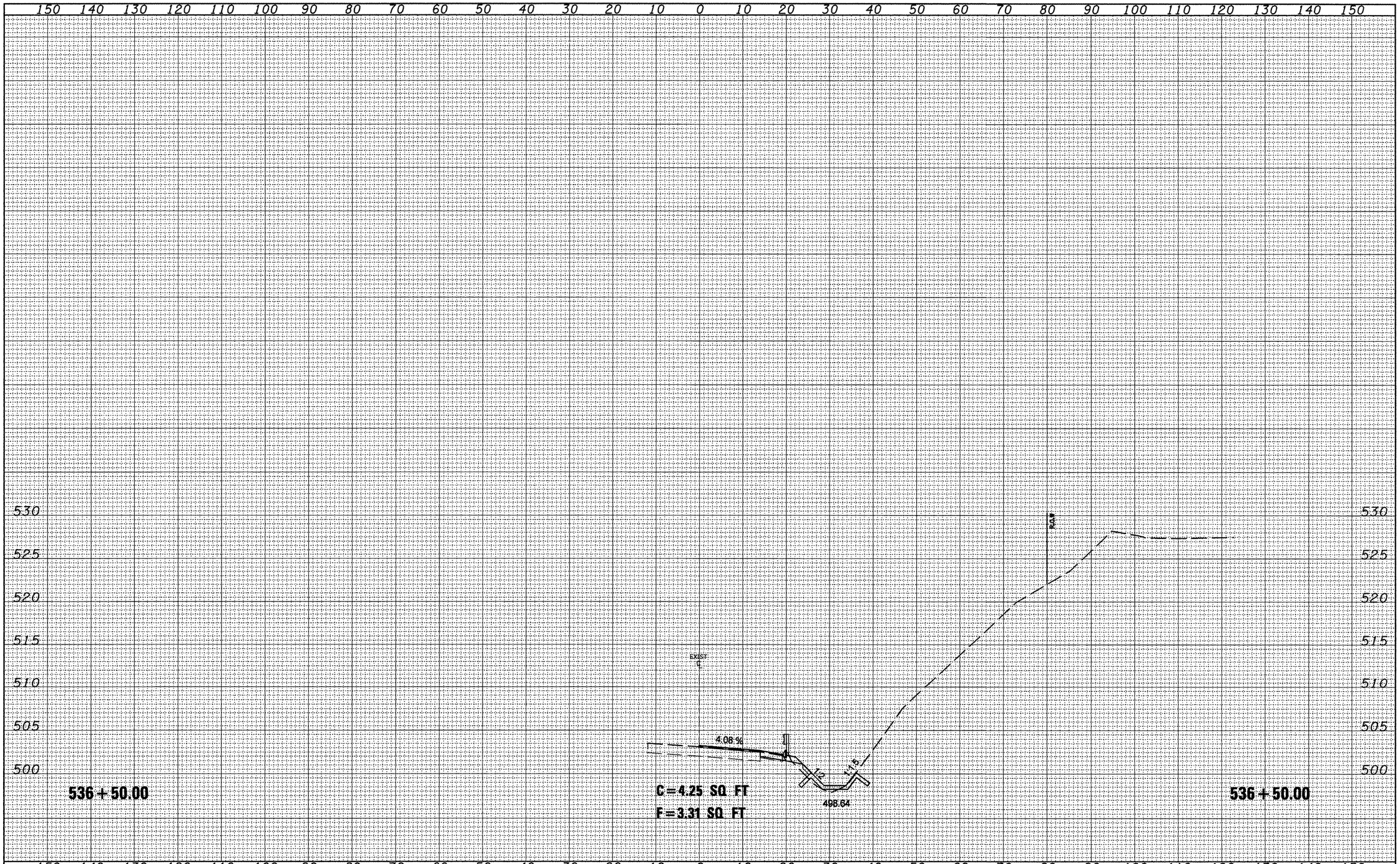

FINAL SURVEY	BY	DATE
SURVEYED		
PLOTTED		
TEMPLATE		
AREAS		
AREAS CHECKED		
NOTE BOOK NO.		

ORIGINAL SURVEY	BY	DATE
SURVEYED		
PLOTTED		
TEMPLATE		
AREAS		
AREAS CHECKED		
NOTE BOOK NO.		

FILE NAME = c:\projects\us241ilam\xsheet.dgn	USER NAME = crespole	DESIGNED -	REVISED -
		DRAWN -	REVISED -
	PLOT SCALE = 20.0000 ' / IN.	CHECKED -	REVISED -
	PLOT DATE = 10/14/2008	DATE -	REVISED -

STATE OF ILLINOIS
DEPARTMENT OF TRANSPORTATION

US 24 CULVERT EXTENSION CROSS SECTION

SCALE: | SHEET NO. OF SHEETS | STA. 536+50.00 TO STA. 536+50.00

F.A.P RTE.	SECTION	COUNTY	TOTAL SHEETS	SHEET NO.
317	(137,102)RS-4;101RS-3	FULTON	56	32
		CONTRACT NO. 68337		

FED. ROAD DIST. NO. 4 | ILLINOIS | FED. AID PROJECT

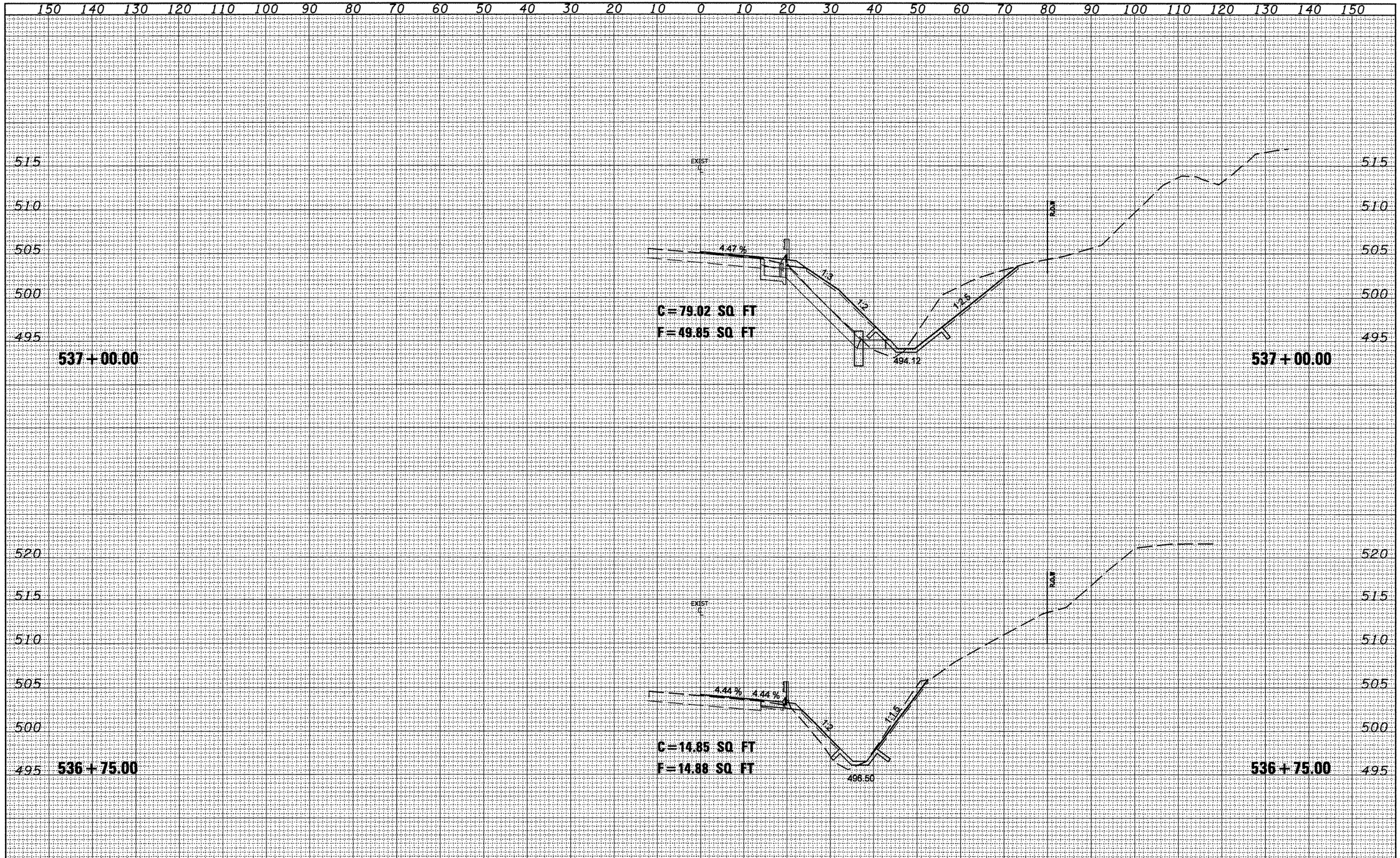

FINAL SURVEY		BY	DATE
NOTE BOOK	SURVEYED		
	PLOTTED		
	TEMPLATE		
	AREAS		
NO.	AREAS CHECKED		

ORIGINAL SURVEY		BY	DATE
NOTE BOOK	SURVEYED		
	PLOTTED		
	TEMPLATE		
	AREAS		
NO.	AREAS CHECKED		

FILE NAME = c:\projects\us241lam\xssheet.dgn	USER NAME = crespole	DESIGNED -	REVISED -
		DRAWN -	REVISED -
	PLOT SCALE = 20.0000 ' / IN.	CHECKED -	REVISED -
	PLOT DATE = 10/14/2008	DATE -	REVISED -

STATE OF ILLINOIS
DEPARTMENT OF TRANSPORTATION

US 24 CULVERT EXTENSION CROSS SECTION

SCALE: | SHEET NO. OF SHEETS | STA. 536+75.00 TO STA. 537+00.00

F.A.P RTE.	SECTION	COUNTY	TOTAL SHEETS	SHEET NO.
317	(137,102)RS-4;101RS-3	FULTON	56	33
		CONTRACT NO. 68337		

FED. ROAD DIST. NO. 4 | ILLINOIS | FED. AID PROJECT

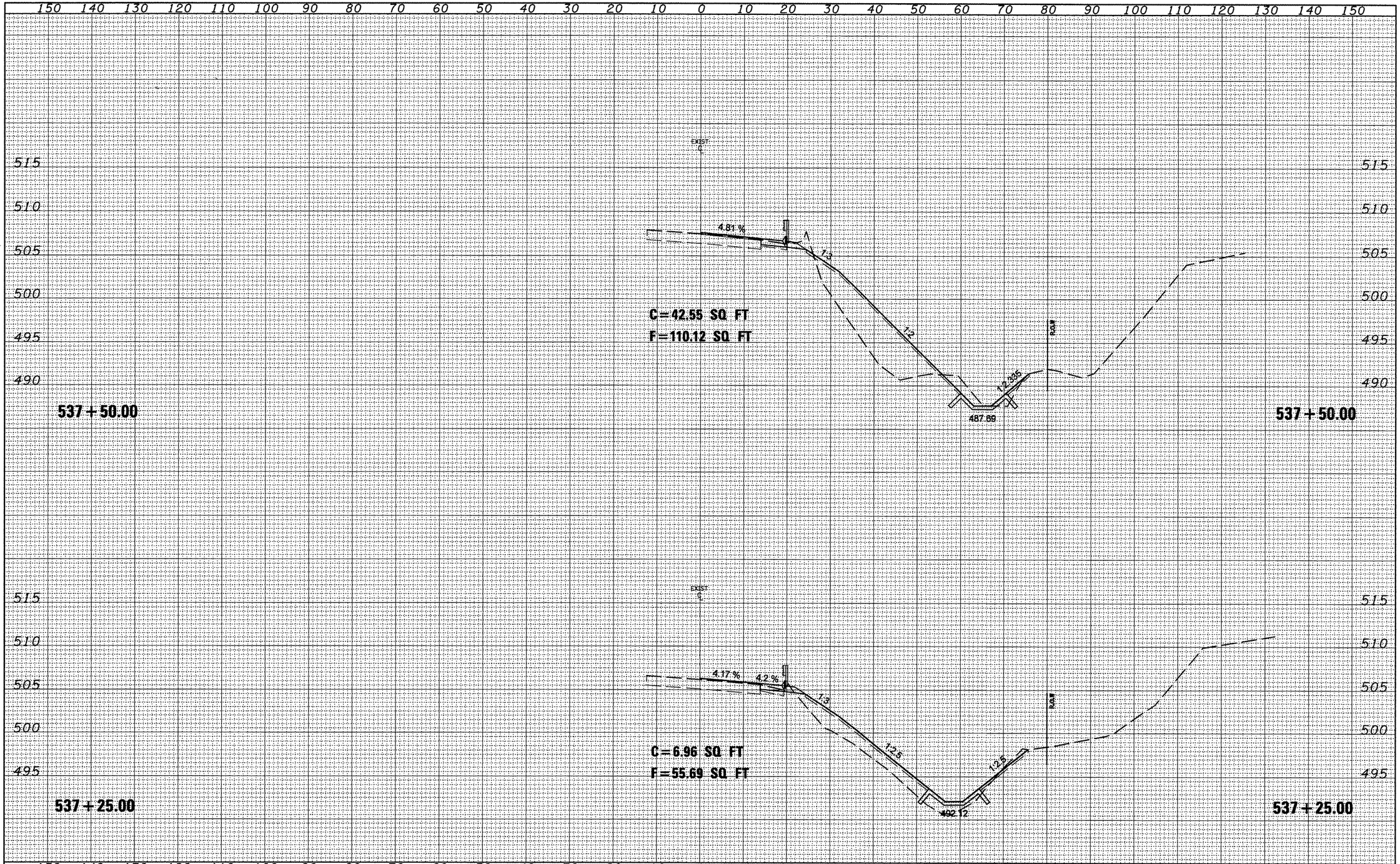

FINAL SURVEY		BY	DATE
NOTE BOOK	SURVEYED		
	PLOTTED		
	TEMPLATE		
	AREAS		
NO.	AREAS CHECKED		

ORIGINAL SURVEY		BY	DATE
NOTE BOOK	SURVEYED		
	PLOTTED		
	TEMPLATE		
	AREAS		
NO.	AREAS CHECKED		

FILE NAME = c:\projects\us241ilem\xssheet.dgn	USER NAME = crespole	DESIGNED -	REVISED -
		DRAWN -	REVISED -
	PLOT SCALE = 20.0000 ' / IN.	CHECKED -	REVISED -
	PLOT DATE = 10/14/2008	DATE -	REVISED -

STATE OF ILLINOIS
DEPARTMENT OF TRANSPORTATION

US 24 CULVERT EXTENSION CROSS SECTION

SCALE: | SHEET NO. OF SHEETS | STA. 537+25.00 TO STA. 537+50.00

F.A.P RTE.	SECTION	COUNTY	TOTAL SHEETS	SHEET NO.
317	(137,102)RS-4;101RS-3	FULTON	56	34
		CONTRACT NO. 68337		

FED. ROAD DIST. NO. 4 | ILLINOIS | FED. AID PROJECT

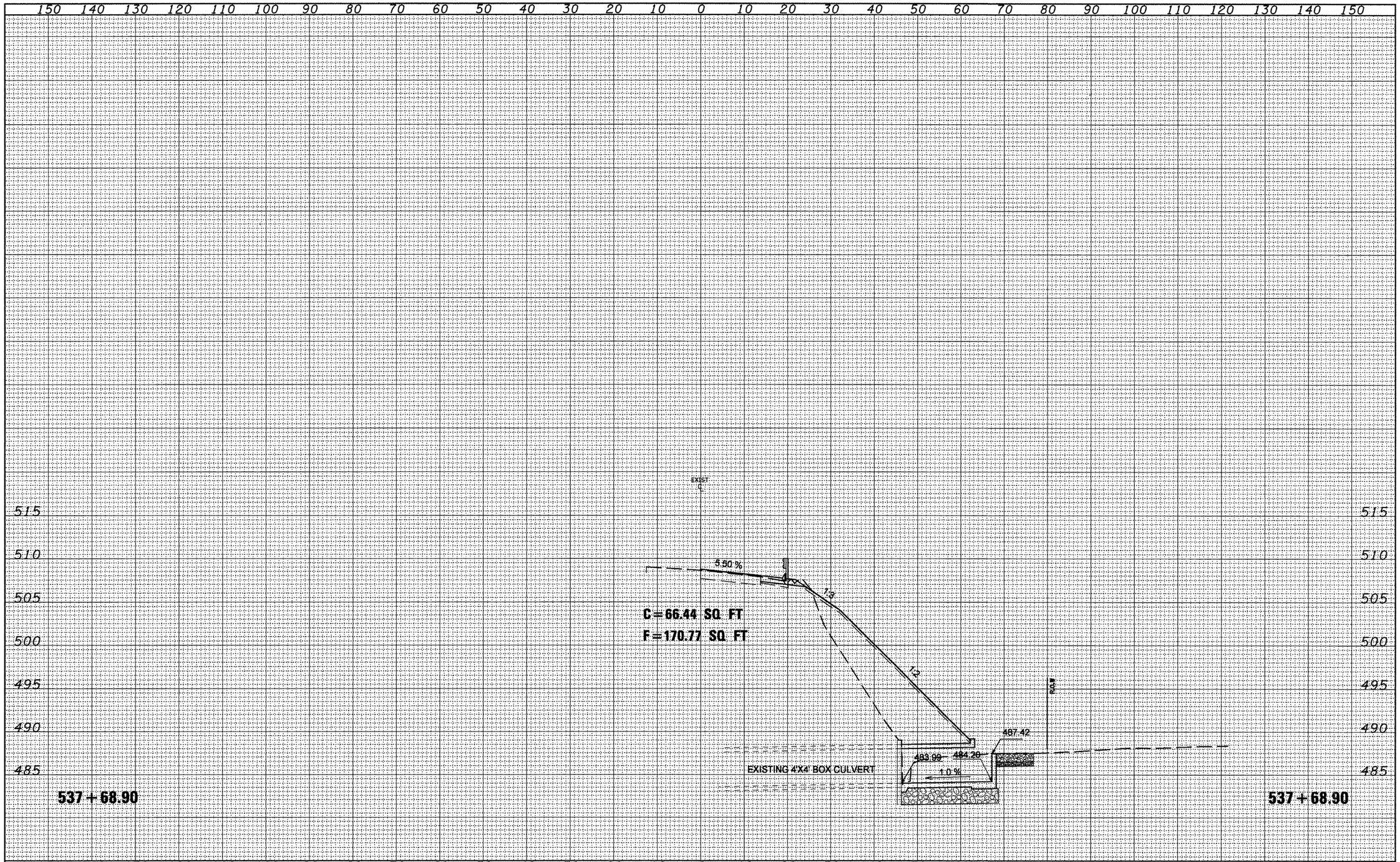

FINAL SURVEY	BY	DATE
SURVEYED		
PLOTTED		
TYPING DATE		
AREAS		
NOTE BOOK		
AREAS CHECKED		
NO.		

ORIGINAL SURVEY	BY	DATE
SURVEYED		
PLOTTED		
TYPING DATE		
AREAS		
NOTE BOOK		
AREAS CHECKED		
NO.		

FILE NAME = c:\projects\us24illam\xsheet.dgn	USER NAME = crespole	DESIGNED -	REVISED -
		DRAWN -	REVISED -
	PLOT SCALE = 20.0000 ' / IN.	CHECKED -	REVISED -
	PLOT DATE = 10/14/2008	DATE -	REVISED -

STATE OF ILLINOIS
DEPARTMENT OF TRANSPORTATION

US 24 CULVERT EXTENSION CROSS SECTION

SCALE: | SHEET NO. OF SHEETS | STA. 537+68.90 TO STA. 537+68.90

F.A.P RTE.	SECTION	COUNTY	TOTAL SHEETS	SHEET NO.
317	(137,102)RS-4,101RS-3	FULTON	56	35

CONTRACT NO. 68337

FED. ROAD DIST. NO. 4 | ILLINOIS | FED. AID PROJECT

FINAL SURVEY	BY	DATE
SURVEYED		
PLOTTED		
TEMPLATE		
AREAS		
AREAS CHECKED		
NOTE BOOK NO.		

ORIGINAL SURVEY	BY	DATE
SURVEYED		
PLOTTED		
TEMPLATE		
AREAS		
AREAS CHECKED		
NOTE BOOK NO.		

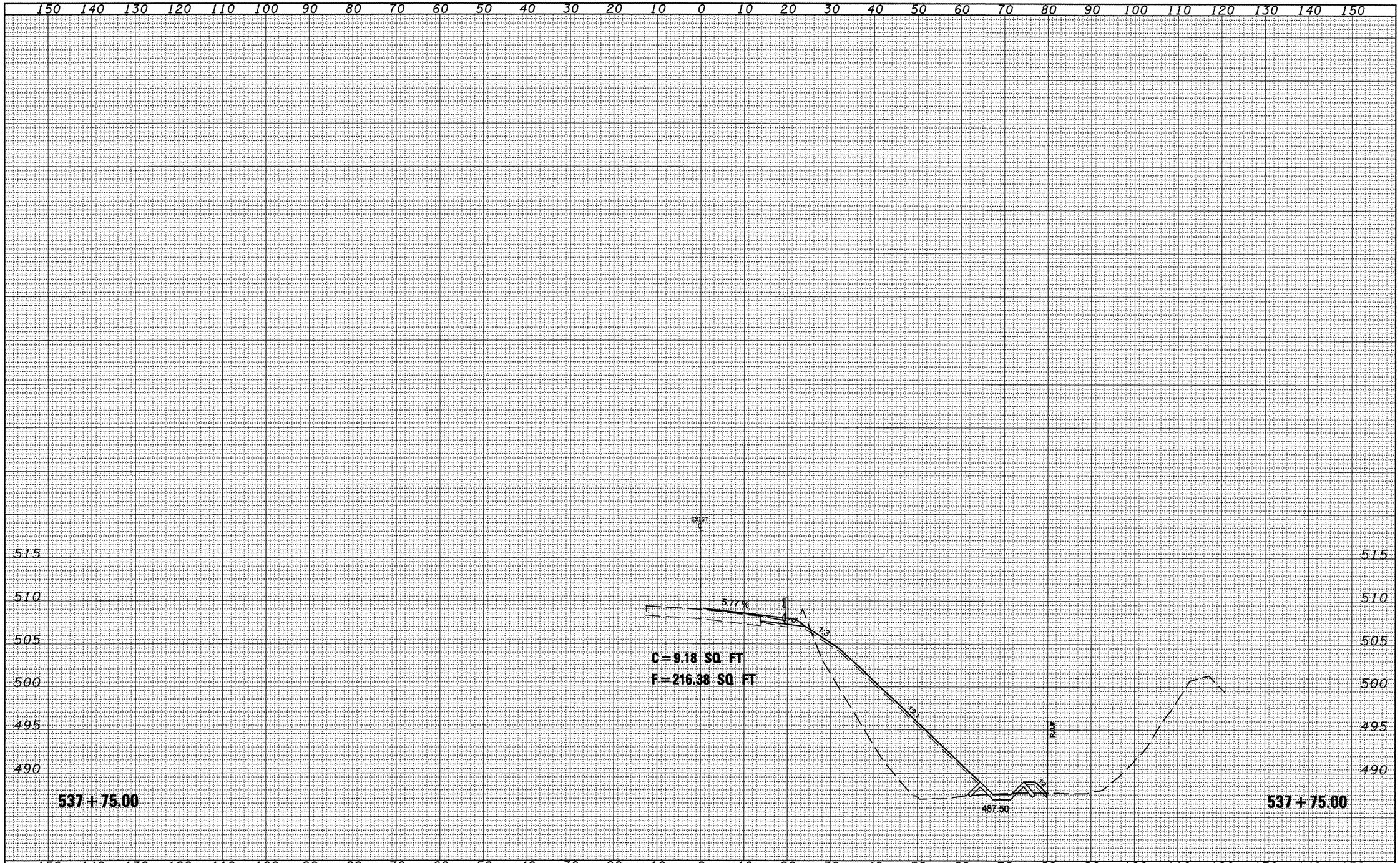

FILE NAME = c:\projects\us241ilom\xssheet.dgn	USER NAME = crespole	DESIGNED -	REVISED -
		DRAWN -	REVISED -
	PLOT SCALE = 20.0000 ' / IN.	CHECKED -	REVISED -
	PLOT DATE = 10/14/2008	DATE -	REVISED -

STATE OF ILLINOIS
DEPARTMENT OF TRANSPORTATION

US 24 CULVERT EXTENSION CROSS SECTION

SCALE: | SHEET NO. OF SHEETS | STA. 537+75.00 TO STA. 537+75.00

F.A.P RTE.	SECTION	COUNTY	TOTAL SHEETS	SHEET NO.
317	(137,102)RS-4;101RS-3	FULTON	56	36
		CONTRACT NO. 68337		

FED. ROAD DIST. NO. 4 | ILLINOIS | FED. AID PROJECT

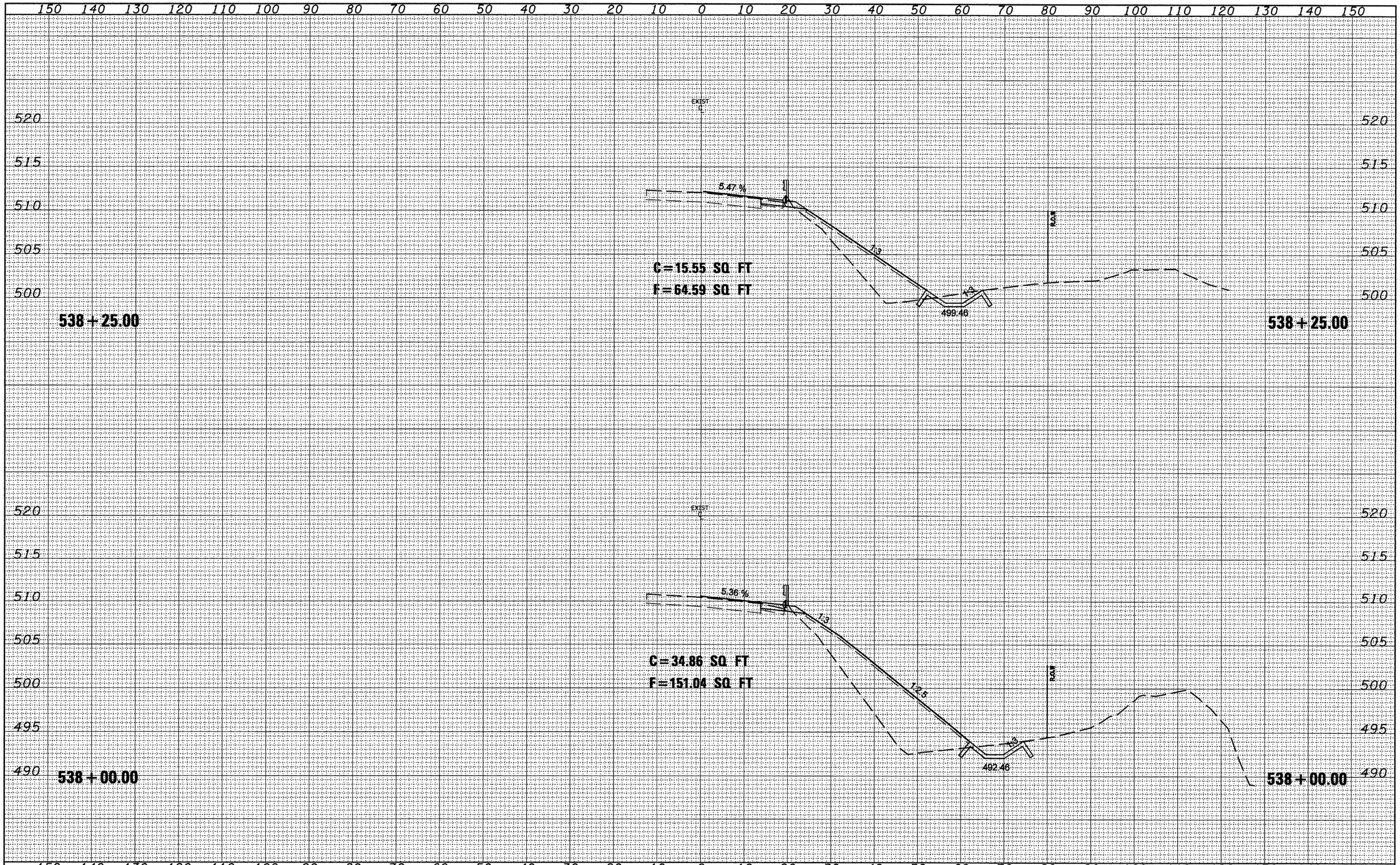

FINAL SURVEY	BY	DATE
SURVEYED		
PLOTTED		
TEMPLATE		
AREAS		
AREAS CHECKED		
NOTE BOOK NO.		

ORIGINAL SURVEY	BY	DATE
SURVEYED		
PLOTTED		
TEMPLATE		
AREAS		
AREAS CHECKED		
NOTE BOOK NO.		

FILE NAME = c:\projects\us241ilam\xssheet.dgn	USER NAME = crespole	DESIGNED -	REVISED -
		DRAWN -	REVISED -
	PLOT SCALE = 20.0000 ' / IN.	CHECKED -	REVISED -
	PLOT DATE = 10/14/2008	DATE -	REVISED -

STATE OF ILLINOIS
DEPARTMENT OF TRANSPORTATION

US 24 CULVERT EXTENSION CROSS SECTION

SCALE: | SHEET NO. OF SHEETS | STA. 538+00.00 TO STA. 538+25.00

F.A.P RTE.	SECTION	COUNTY	TOTAL SHEETS	SHEET NO.
317	(137,102)RS-4;101RS-3	FULTON	56	37
		CONTRACT NO. 68337		

FED. ROAD DIST. NO. 4 | ILLINOIS | FED. AID PROJECT

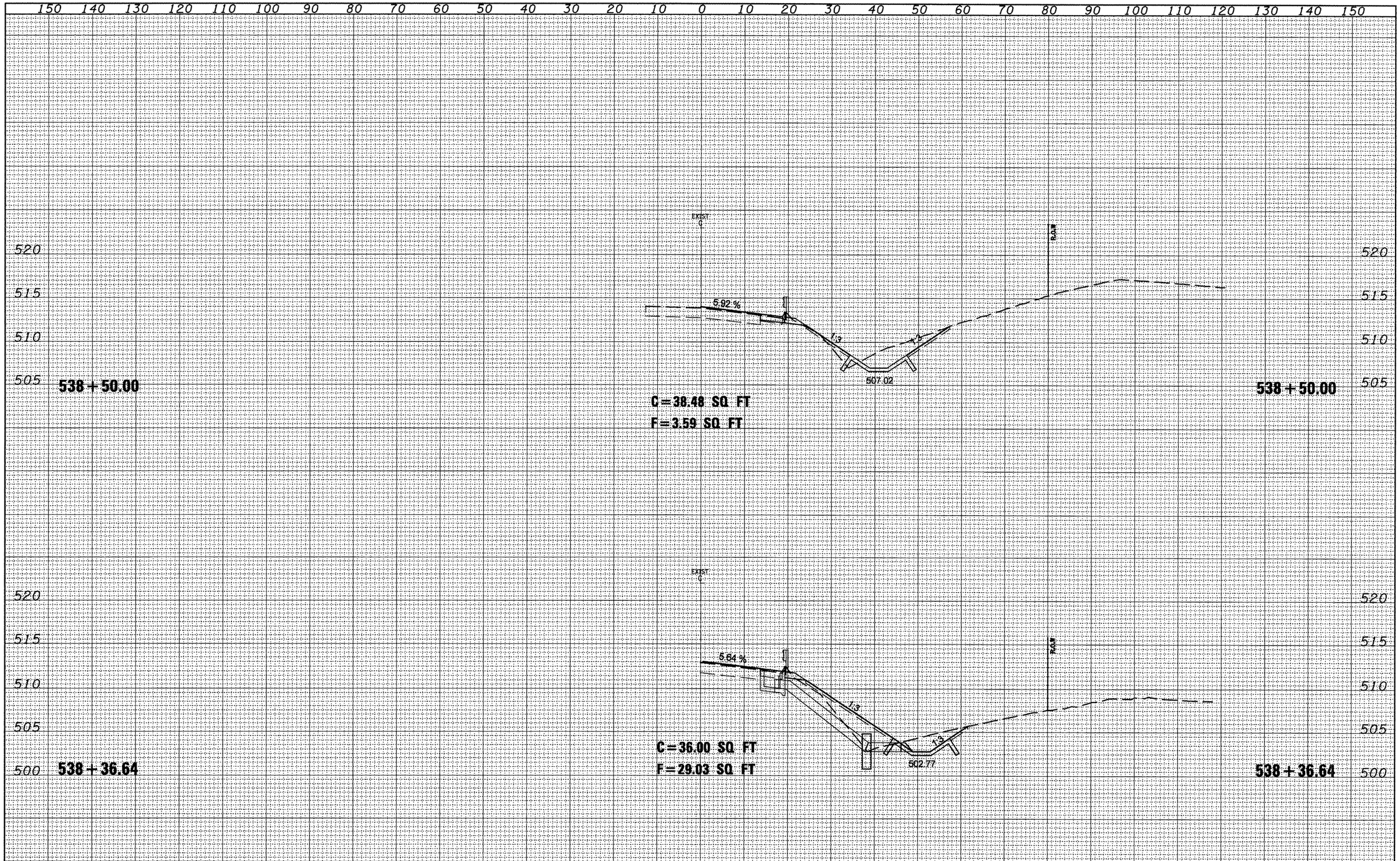

FINAL SURVEY		BY	DATE
NOTE BOOK	SURVEYED		
	PLOTTED		
	TEMPLATE		
	AREAS		
NO.	AREAS CHECKED		

ORIGINAL SURVEY		BY	DATE
NOTE BOOK	SURVEYED		
	PLOTTED		
	TEMPLATE		
	AREAS		
NO.	AREAS CHECKED		

FILE NAME = c:\projects\us24illam\xssheet.dgn	USER NAME = crespole	DESIGNED -	REVISED -
		DRAWN -	REVISED -
	PLOT SCALE = 20.0000 ' / IN.	CHECKED -	REVISED -
	PLOT DATE = 10/14/2008	DATE -	REVISED -

STATE OF ILLINOIS
DEPARTMENT OF TRANSPORTATION

US 24 CULVERT EXTENSION CROSS SECTION

SCALE: | SHEET NO. OF SHEETS | STA. 538+36.64 TO STA. 538+50.00

F.A.P RTE.	SECTION	COUNTY	TOTAL SHEETS	SHEET NO.
317	(137,102)RS-4;101RS-3	FULTON	56	38

CONTRACT NO. 68337

FED. ROAD DIST. NO. 4 | ILLINOIS | FED. AID PROJECT

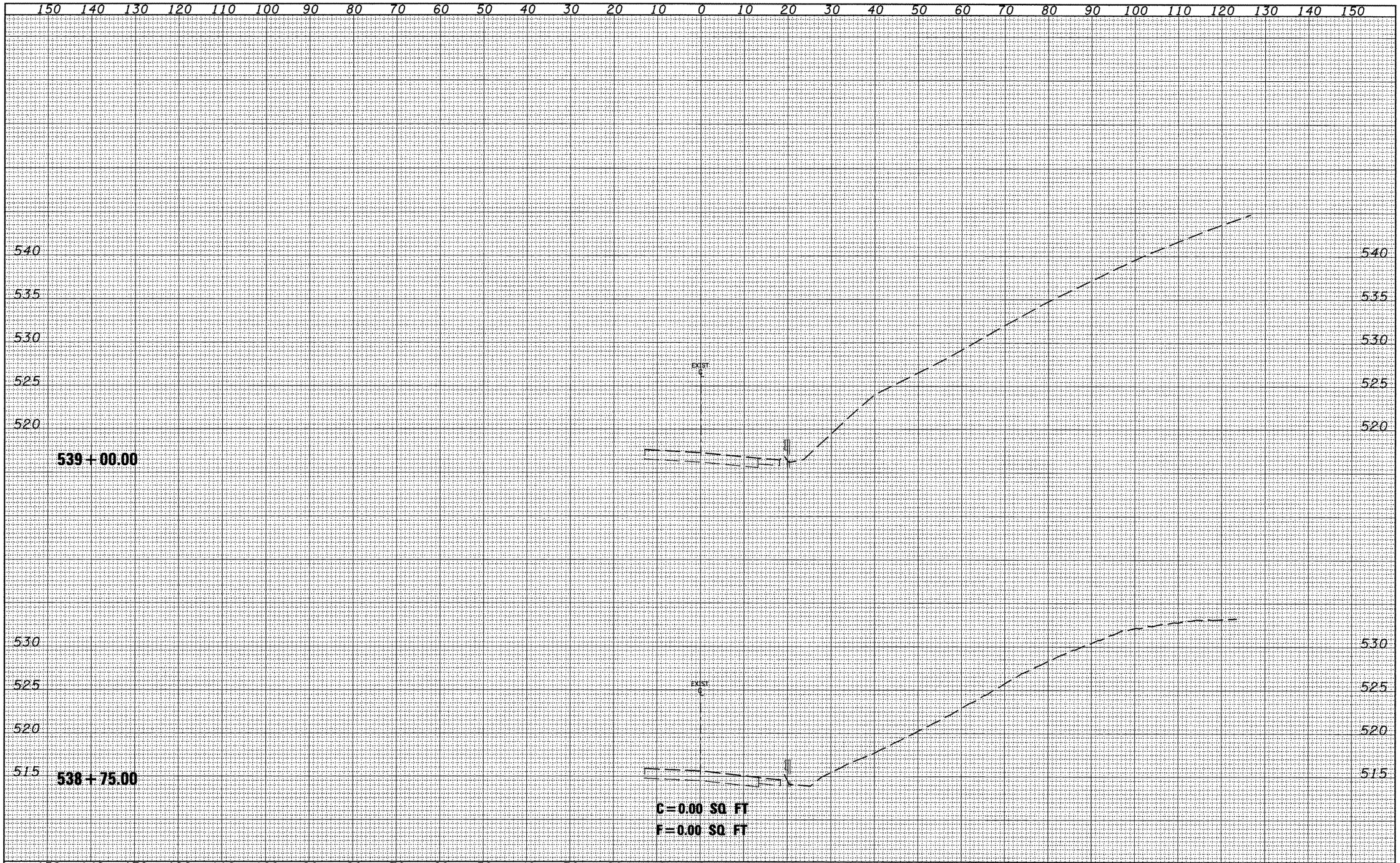

FINAL SURVEY	BY	DATE
SURVEYED		
PLOTTED		
TEMPLATE		
AREAS		
AREAS CHECKED		
NOTE BOOK NO.		

ORIGINAL SURVEY	BY	DATE
SURVEYED		
PLOTTED		
TEMPLATE		
AREAS		
AREAS CHECKED		
NOTE BOOK NO.		

FILE NAME = c:\projects\us241ilem\xssheet.dgn	USER NAME = crespole	DESIGNED -	REVISED -
		DRAWN -	REVISED -
	PLOT SCALE = 20.0000 ' / IN.	CHECKED -	REVISED -
	PLOT DATE = 10/14/2008	DATE -	REVISED -

STATE OF ILLINOIS
DEPARTMENT OF TRANSPORTATION

US 24 CULVERT EXTENSION CROSS SECTION

SCALE: | SHEET NO. OF SHEETS | STA. 538+75.00 TO STA. 539+00.00

F.A.P RTE.	SECTION	COUNTY	TOTAL SHEETS	SHEET NO.
317	(137,102)RS-4;101RS-3	FULTON	56	39
		CONTRACT NO. 68337		

FED. ROAD DIST. NO. 4 | ILLINOIS | FED. AID PROJECT

SLOPE STEPS DETAIL

TYPICAL CROSS-SECTION EMBANKMENT
CONSTRUCTION ON SIDEHILL

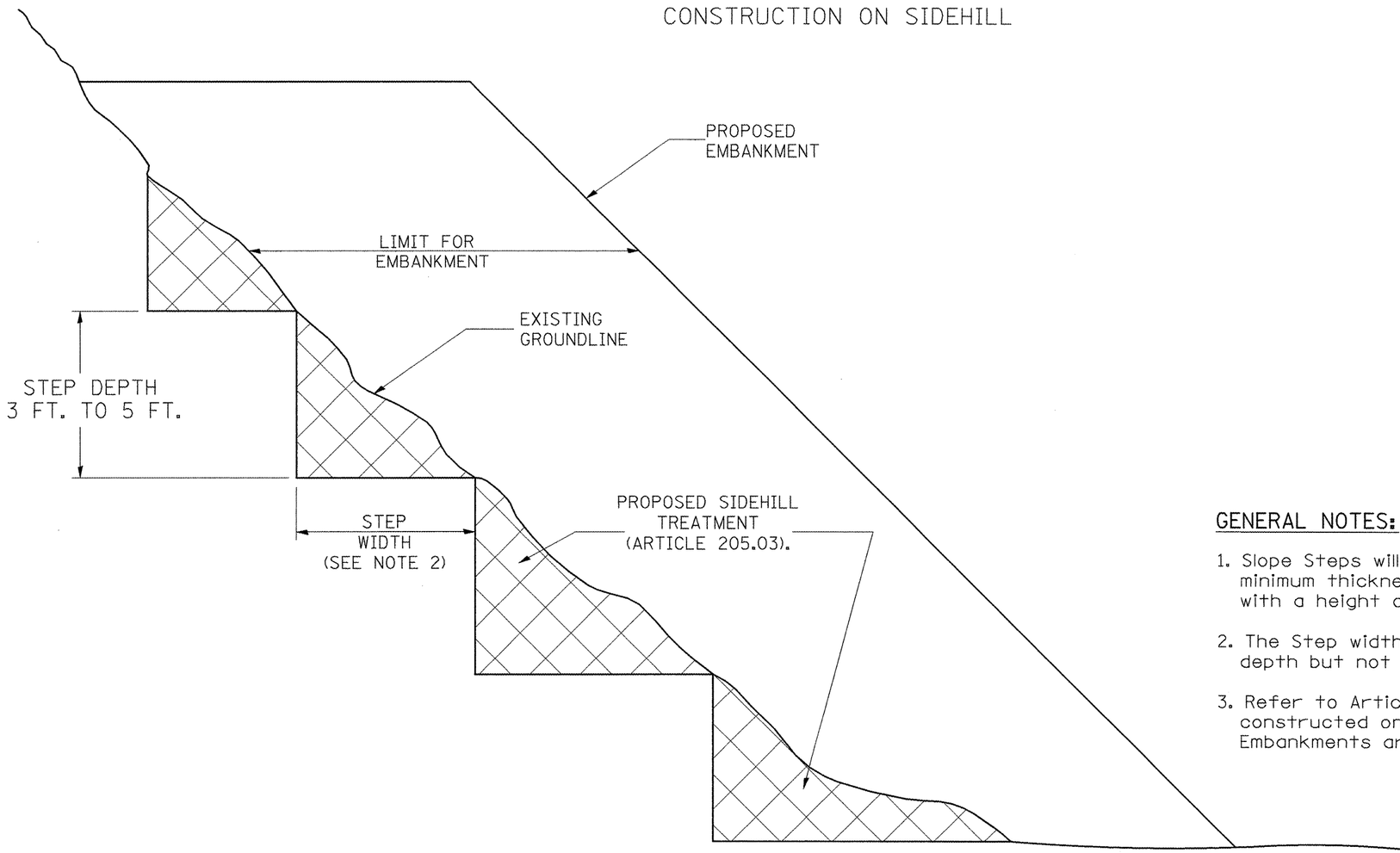

GENERAL NOTES:

1. Slope Steps will be required for all 12(300) minimum thickness "silver fills" and on a fills with a height of 10'(3.0m).
2. The Step width shall be twice the Step depth but not less than 6 feet.
3. Refer to Article 205.03 for Embankment to be constructed on Hillside or Slopes, or if existing Embankments are to be widened.

REPLACEMENT MATERIAL:

STANDARD EMBANKMENT
(IN ACCORDANCE WITH
205 OF THE STANDARD SPECIFACATION).

DESIGNER NOTE:
1. EACH PROJECT SHOULD BE REVIEWED INDEPENDENTLY FOR TREATMENT REQUIRED.
2. REFER TO THIS DETAIL WITH NOTE ON APPLICABLE TYPICAL SECTIONS.

All dimensions are in inches (millimeters) unless otherwise noted.

1-1-97	RENUM. L-5.03, NEW REVISION BOX, REVISED TITLE	T.P.
	BOX, REVISED GENERAL NOTES.	
10-16-06	REVISED TO 2007 SPEC.	M.A.

STATE OF ILLINOIS
DEPARTMENT OF TRANSPORTATION

SLOPE STEPS DETAIL

NOT TO SCALE

CADD STD. 205001-D4

F.A.P 317	SECTION	COUNTY	TOTAL SHEETS	SHEET NO.
US24	(137,102)RS-4; 101RS-3	FULTON		40
		CONTRACT NO. 68337		

FED. ROAD DIST. NO. | ILLINOIS | FED. AID PROJECT

Designer NOTES:
1. Designer to modify this Special Detail sheet, as needed, for inclusion in plans.
2. Include Highway Standard 280001 "TEMPORARY EROSION CONTROL SYSTEM."

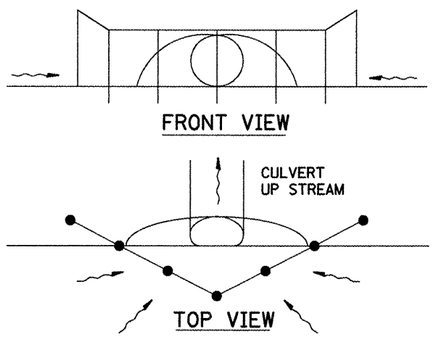

UPSTREAM PIPE CULVERT EROSION CONTROL

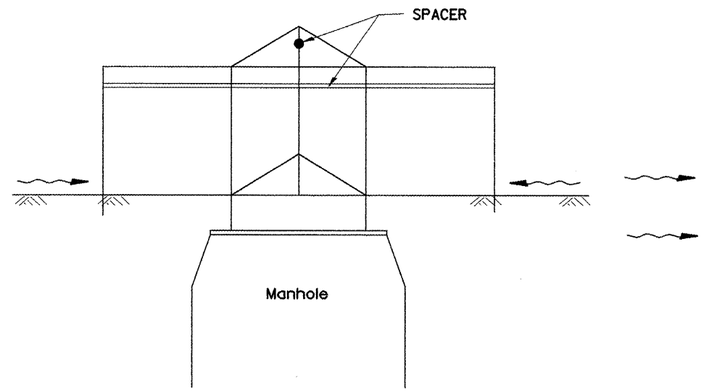

SIDE VIEW
A-A

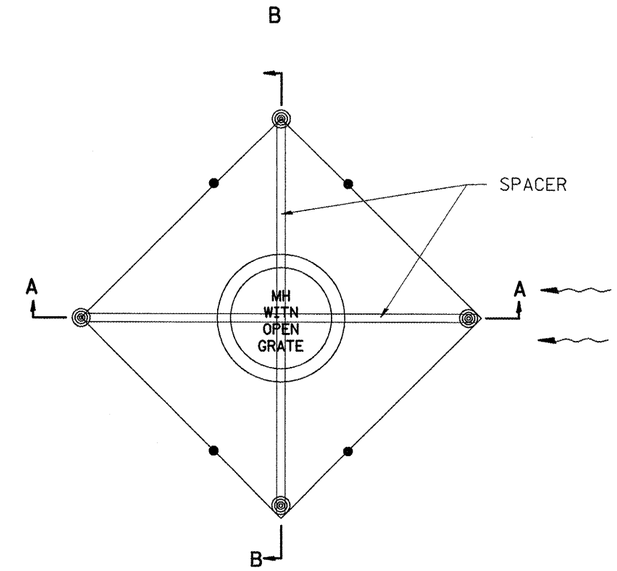

TOP VIEW

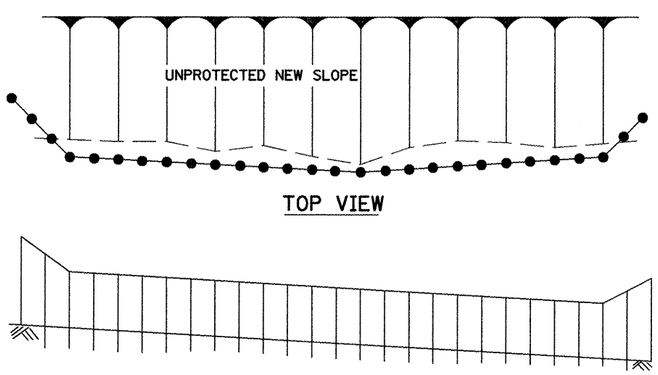

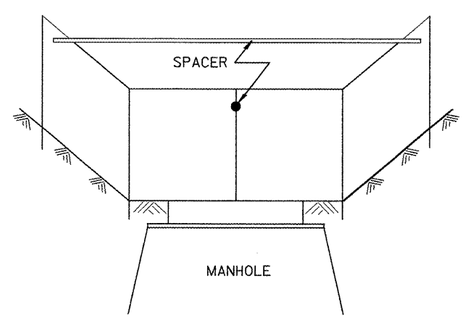

Front View
B-B

EROSION CONTROL
AT
OPEN GRATE MAN HOLE

GENERAL NOTES:

1. This work shall be performed in accordance with Sections 280 & 1081, of the Standard Specifications.
2. Additional Timber or Metal Post shall be installed, as needed.

All dimensions are in inches (millimeters) unless otherwise noted.

1-1-97		T.P.
3-11-03	ELIMINATED SILT FENCE DITCH CHECK	M.A.

STATE OF ILLINOIS
DEPARTMENT OF TRANSPORTATION

TYPICAL APPLICATION OF SILT FILTER FENCE

NOT TO SCALE

CADD STD. 280001-D4

F.A.P 317	SECTION	COUNTY	TOTAL SHEETS	SHEET NO.
US24	(137,102)RS-4; 101RS-3	FULTON		41
		CONTRACT NO. 68337		
FED. ROAD DIST. NO.	ILLINOIS	FED. AID PROJECT		

CASE 1
(DITCH)

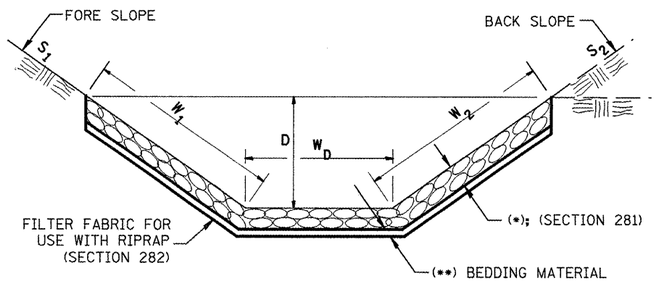

(*)				
LOCATION	WIDTH (1)	LENGTH	RIPRAP	FABRIC
STA TO STA	lin ft (m)	lin ft (m)	tons (m tons)	sq yds (m^2)
TOTAL				

(1) WIDTH = $W_1 + W_2 + W_D$

CASE 2
(CULVERT & SLOPE)

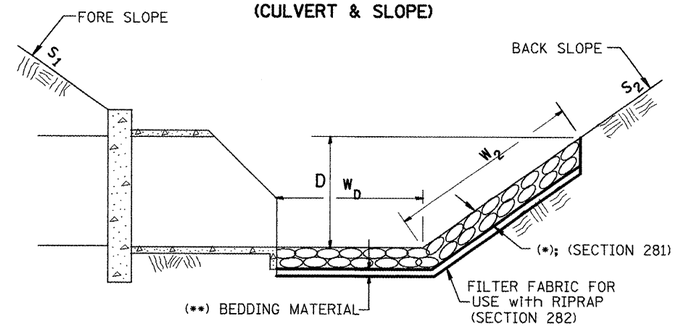

(*)				
LOCATION	WIDTH (1)	LENGTH	RIPRAP	FABRIC
STA TO STA	lin ft (m)	lin ft (m)	tons (m tons)	sq yds (m^2)
TOTAL				

(1) WIDTH = $W_2 + W_D$

CASE 3
(CULVERT)

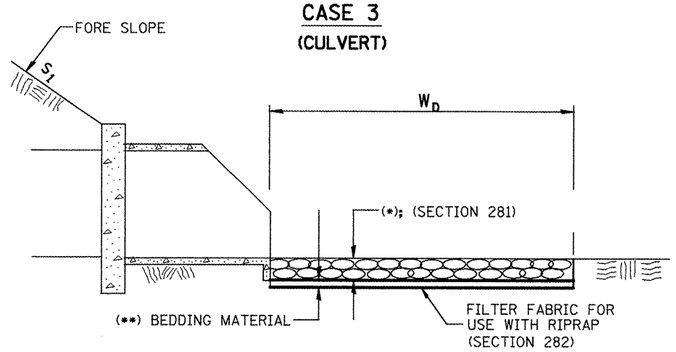

(*)				
LOCATION	WIDTH (1)	LENGTH	RIPRAP	FABRIC
STA TO STA	lin ft (m)	lin ft (m)	tons (m tons)	sq yds (m^2)
TOTAL				

(1) WIDTH = W_D

Designer NOTES:
1. Designer to modify this Special Detail Sheet, as needed for inclusion in plans.
2. (*) Designer to specify pay item including material, quality, and gradation.
3. (**) Designer to specify thickness of bedding material.
4. Include District Special Provision if needed.

All slope ratios are expressed as units of vertical displacement to units of horizontal displacement (V:H).

All dimensions are in inches (millimeters) unless otherwise noted.

1-1-97	RENUM. A-12.02, NEW REVISION BOX	T.P.
12-1-97	CORRECT FILTER FABRIC LEADER ARROW	J.A.
10-16-06	REVISED TO 2007 SPEC.	M.A.

STATE OF ILLINOIS
DEPARTMENT OF TRANSPORTATION

RIPRAP DITCH FOR EROSION PROTECTION

NOT TO SCALE

CADD STD. 281001-D4

F.A.P 317	SECTION	COUNTY	TOTAL SHEETS	SHEET NO.
US24	(137,102)RS-4; 101RS-3	FULTON		42
		CONTRACT NO. 68337		
FED. ROAD DIST. NO.	ILLINOIS	FED. AID PROJECT		

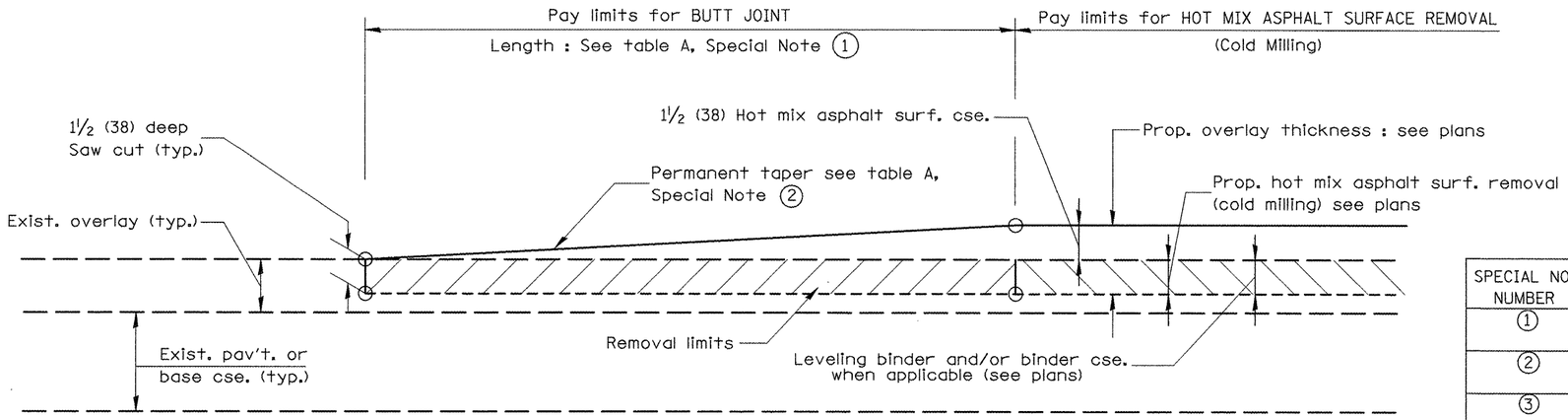

CASE 1 : WITH HOT MIX ASPHALT SURFACE REMOVAL (COLD MILLING)

TABLE A

(LENGTHS AND TAPER RATES)

SPECIAL NOTE NUMBER	ELEMENT	MAINLINE INTERSTATES & 4-LANE EXPRESSWAYS	ALL OTHERS
1	LENGTH OF BUTT JOINT	60'(18.0 m)	30'(9.0 m)
2	PERMANENT TAPER RATE	1:480	1:240
3	TEMPORARY RAMP TAPER RATE	1:80	1:40
4	TEMPORARY RAMP LENGTH	10'(3.0 m)	5'(1.5 m)
5	LENGTH OF BUTT JOINT	10'(3.0 m)	10'(3.0 m)

GENERAL NOTES

1. The work shall be done in accordance with Article 406.08 and the Special Provision for Butt Joints.
2. The pavement surface to be removed may be either bituminous or P.C. concrete. The work shall be performed in accordance with Article 440.04 and the Special Provisions for Butt Joints.
3. The saw cut joints shall be primed just prior to the placing of bituminous material. The work will be in accordance with the applicable portions of Article 406.05.

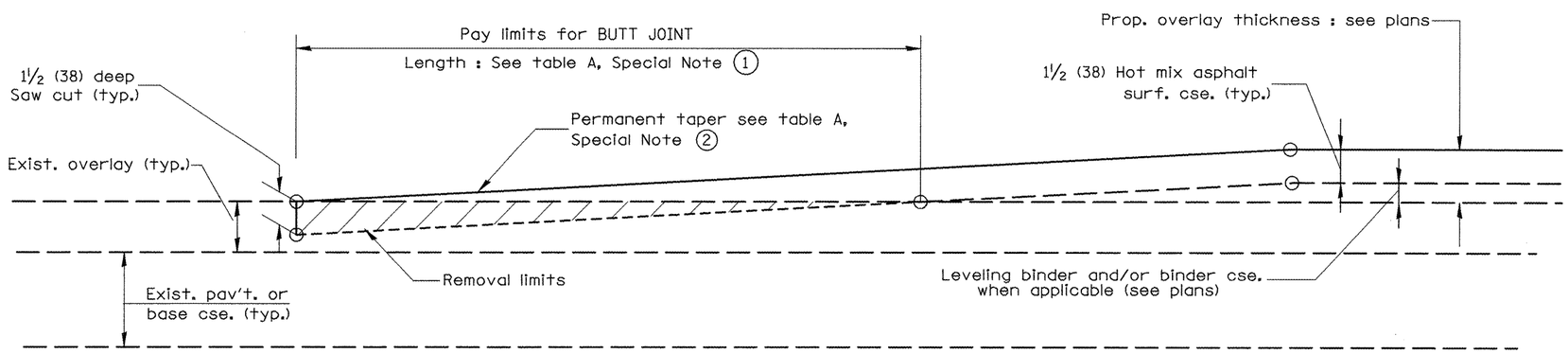

CASE 2 : NO HOT MIX ASHALT SURFACE REMOVAL (COLD MILLING)

All dimensions are in inches (millimeters) unless otherwise noted.

DESIGNER NOTES:
1. Include District Special Provision for Butt Joints & for Hot Mix Asphalt Removal (Cold Milling).
2. The butt joints pay item includes the saw cut & temporary ramp. Payment for the Butt Joint applies whether or not the project features Hot Mix Asphalt Removal (Cold Milling).

01-01-97	RENUM. C-23.01, NEW REVISION BOX	T.P.
04-01-97	CORRECTION TO DEPTH	J.A.
09-15-05	REVISED DESIGNER NOTE	M.M.A.
10-16-06	REVISED TO 2007 SPEC.	M.A.

STATE OF ILLINOIS
DEPARTMENT OF TRANSPORTATION

BUTT JOINTS

NOT TO SCALE

SHT. 1 OF 3
CADD STD. 406101-D4

F.A.P. 317	SECTION	COUNTY	TOTAL SHEETS	SHEET NO.
US24	(137,102)RS-4; 101RS-3		56	43

CONTRACT NO. 68337

FED. ROAD DIST. NO. | ILLINOIS | FED. AID PROJECT

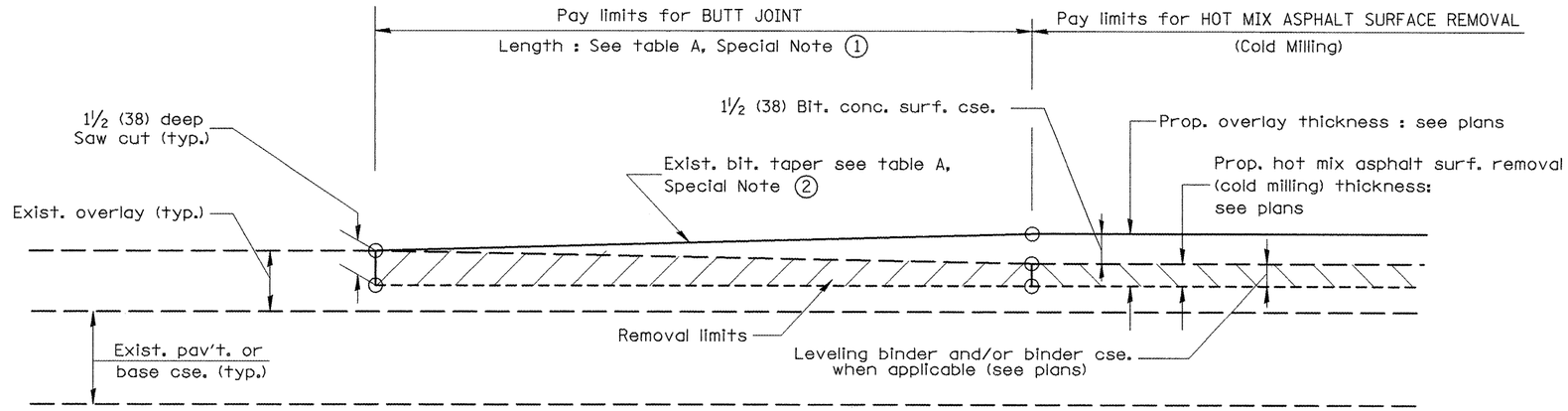

CASE 3 : WITH HOT MIX ASPHALT SURFACE REMOVAL (COLD MILLING)
TIE-IN TO EXISTING BITUMINOUS TAPER

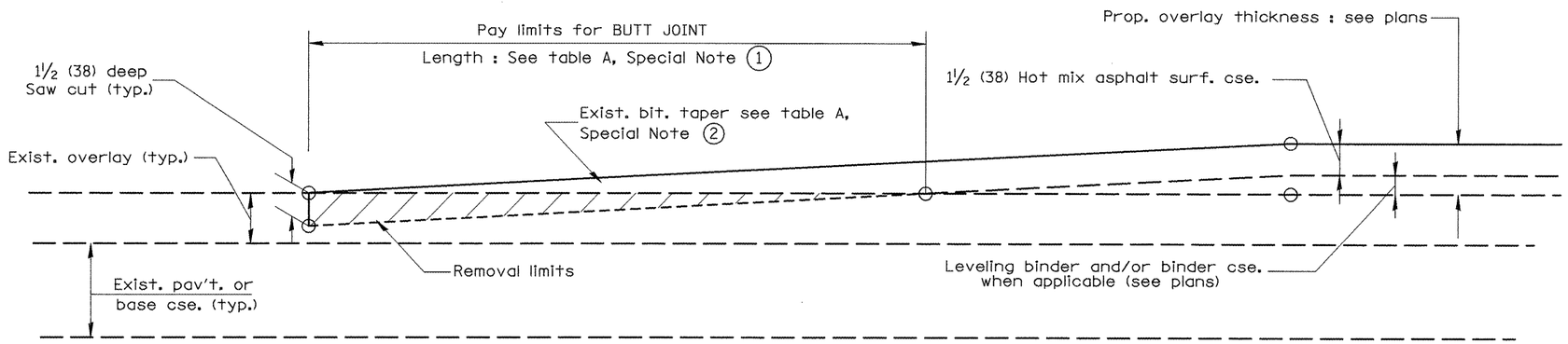

CASE 4 : NO HOT MIX ASPHALT SURFACE REMOVAL (COLD MILLING)
TIE-IN TO EXISTING BITUMINOUS TAPER

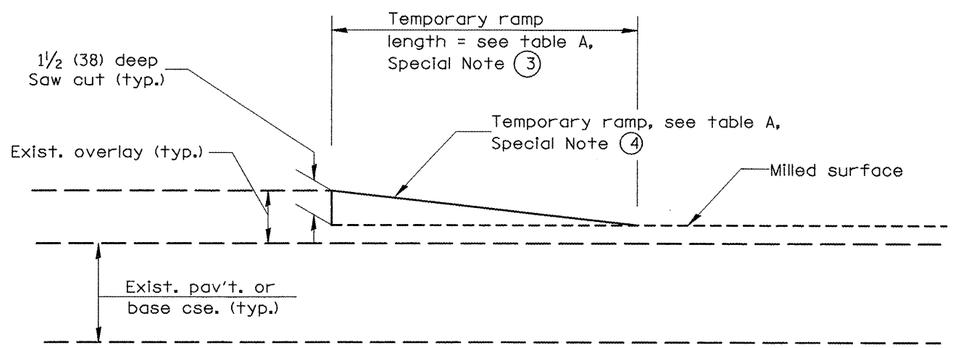

DETAIL TEMPORARY RAMP

All dimensions are in inches (millimeters) unless otherwise noted.

STATE OF ILLINOIS
DEPARTMENT OF TRANSPORTATION

NOT TO SCALE

BUTT JOINTS

SHT. 2 OF 3
CADD STD. 406101-D4

F.A.P 317	SECTION	COUNTY	TOTAL SHEETS	SHEET NO.
US24	(137,102)RS-4; 101RS-3		56	44
		CONTRACT NO. 68337		
FED. ROAD DIST. NO.	ILLINOIS	FED. AID PROJECT		

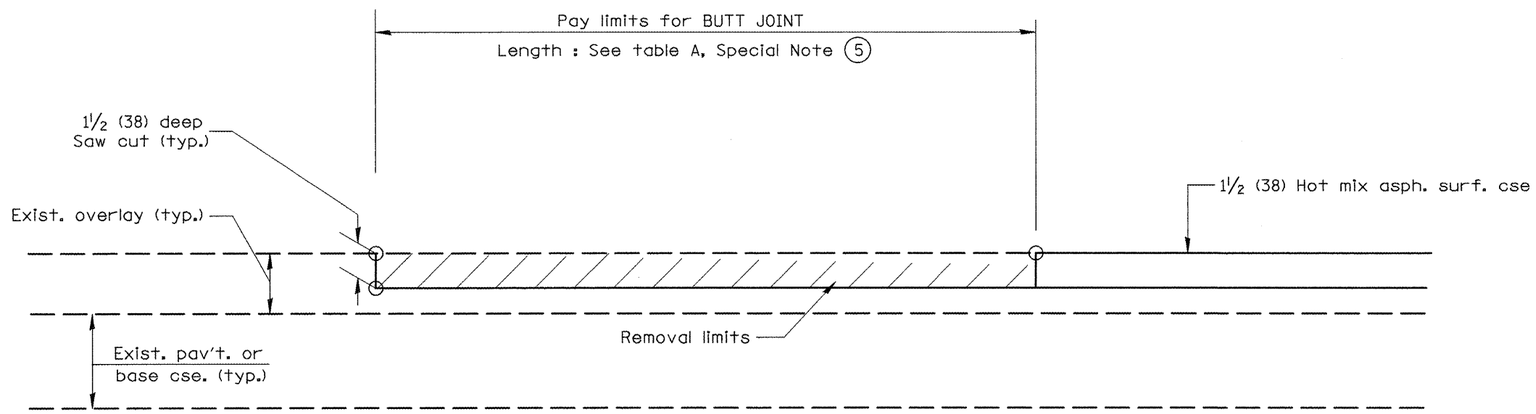

CASE 5 : WITH HOT MIX ASPHALT SURFACE REMOVAL (COLD MILLING)
TIE-IN TO EXISTING BITUMINOUS TAPER

All dimensions are in inches (millimeters) unless otherwise noted.

				STATE OF ILLINOIS DEPARTMENT OF TRANSPORTATION	BUTT JOINTS	F.A.P 317	SECTION	COUNTY	TOTAL SHEETS	SHEET NO.
						US24	(137,102)RS-4; 101RS-3		56	45
					NOT TO SCALE SHT. 3 OF 3 CADD STD. 406101-D4			CONTRACT NO. 68337		
						FED. ROAD DIST. NO.	ILLINOIS	FED. AID PROJECT		

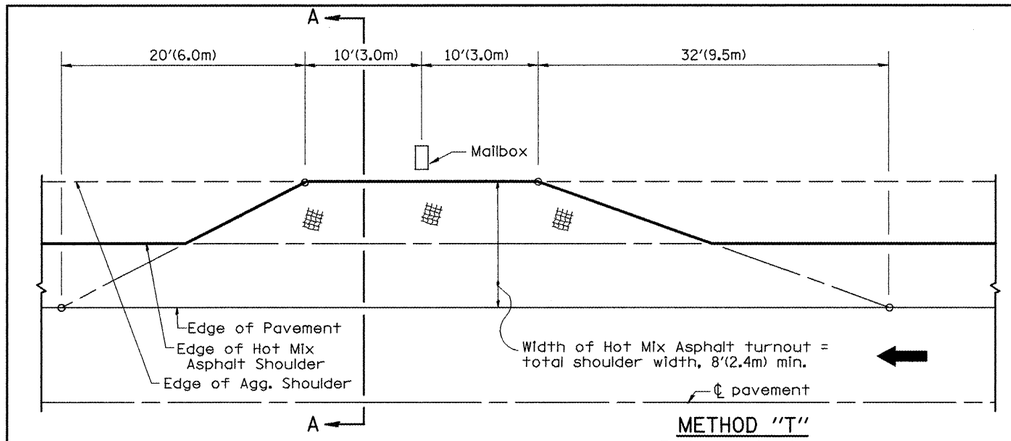

METHOD "T"

Typical Application

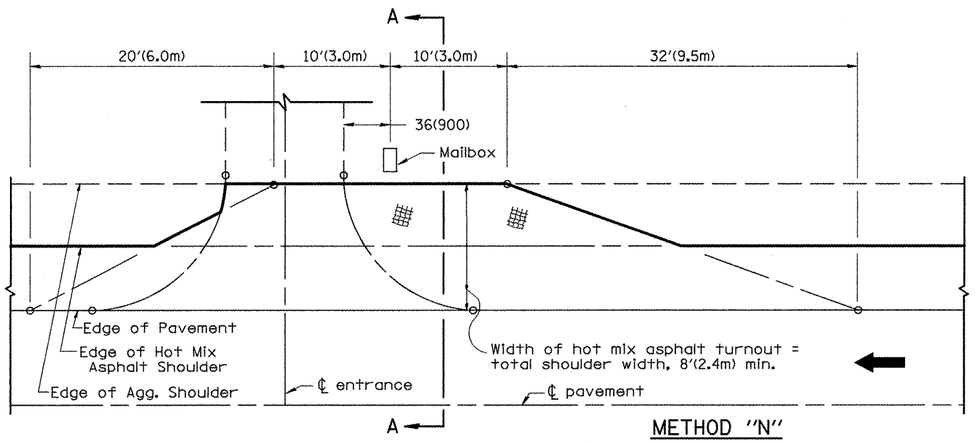

METHOD "N"

Mailbox on near side of entrance

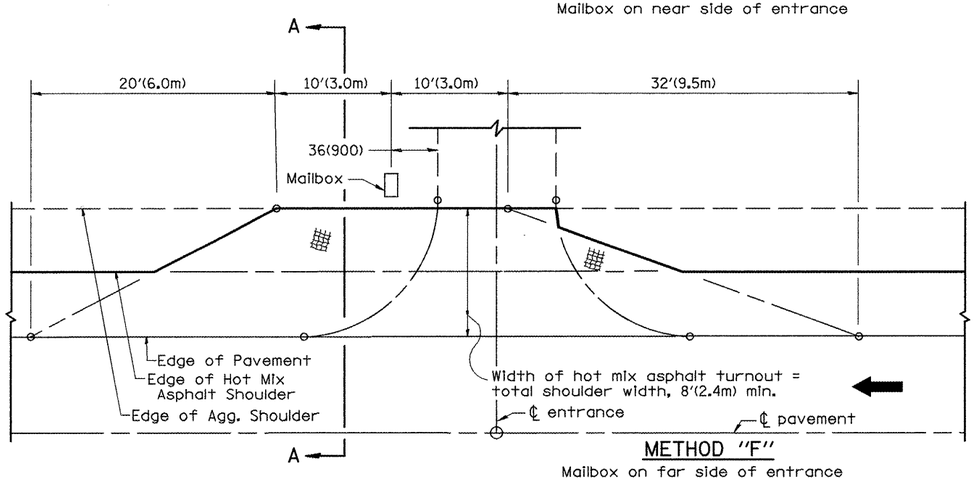

METHOD "F"

Mailbox on far side of entrance

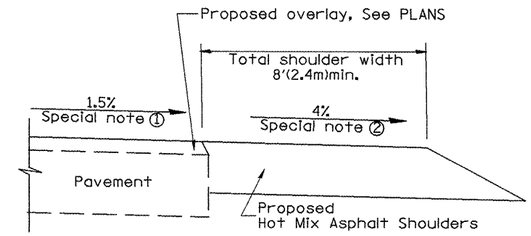

SECTION A-A

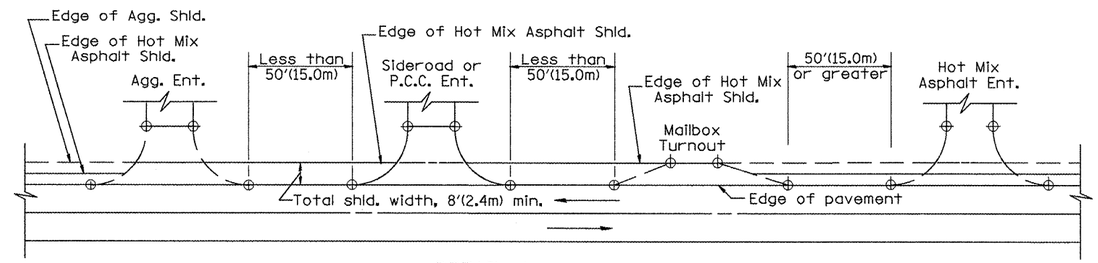

DETAIL A

SHOULDER TREATMENT FOR CLOSELY SPACED SIDEROADS, ENTRANCES, AND/OR MAILBOX TURNOUTS

GENERAL NOTES

1. Mailbox turnouts shall slope away from the pavement edge at a rate equal to the shoulder slope. See SECTION A-A.
2. The total shoulder width, 8'(2.4m) minimum, shall be paved between sideroads entrances and/or mailbox turnouts at locations where the distance between radius or taper control points is less than 50'(15.0m). See DETAIL A.
3. Mailboxes shall be mounted such that the face of the mailbox is 6(150) to 12(300) and the post a minimum of 24(600) from the edge of the turnout surfacing.

SPECIAL NOTES

① The mainline pavement cross-slope is 1.5% for tangent alignment. See PLANS for cross-slope on superelevated horizontal curves.

② The shoulder slope shall control the turnout slope. The standard cross-slope is 4% for tangent alignment. Through superelevated curves, the maximum pavement-shoulder breakover should not be greater than 10% for shoulders 6'(1.8m) and wider and 12% for shoulders 4'(1.2m) and less. Where 12(300) paved shoulders are provided, the breakover should be at the edge of the paved shoulder rather than at the pavement edge.

DESIGNER NOTES:
1. THIS DRAWING REPLACES STATE STANDARD 406201
2. DESIGNER SHOULD CONSULT CHAPTER 49 OF THE BDE MANUAL

All dimensions are in inches (millimeters) unless otherwise noted.

01-01-97	RENUM. C-90.01, NEW REVISION BOX	T.P.
07-01-97	REVISE DESIGNER NOTES	J.A.
09-15-05	REVISED DESIGNER NOTE	M.M.A.
10-16-06	REVISED TO 2007 SPEC.	M.A.

STATE OF ILLINOIS
DEPARTMENT OF TRANSPORTATION

MAILBOX TURNOUTS FOR "3R" PROJECTS

NOT TO SCALE

CADD STD. 406201-D4

F.A.P 317	SECTION	COUNTY	TOTAL SHEETS	SHEET NO.
US24	(137,102)RS-4; 101RS-3		56	46

CONTRACT NO. 68337

FED. ROAD DIST. NO. | ILLINOIS | FED. AID PROJECT

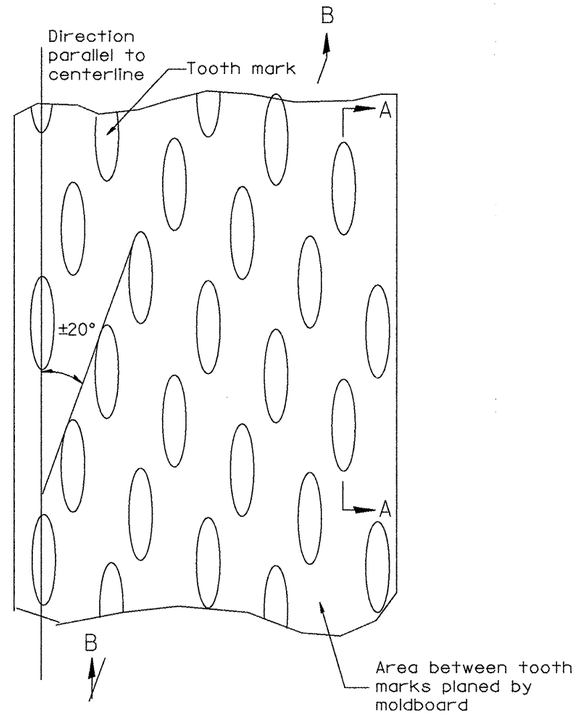

PLAN

General notes:

1. Coldmilling shall consist of two processes: Cutting with carbide teeth mounted on a rotating drum, and planing with a moldboard mounted immediately behind the cutting drum.
2. Other similar patterns will be acceptable if they consist of a smooth, flat, planed surface interspersed with a pattern of discontinuous longitudinal striations.

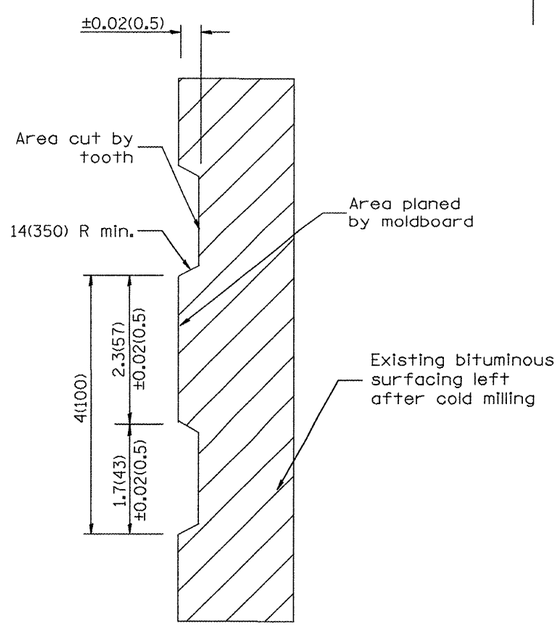

SECTION A-A

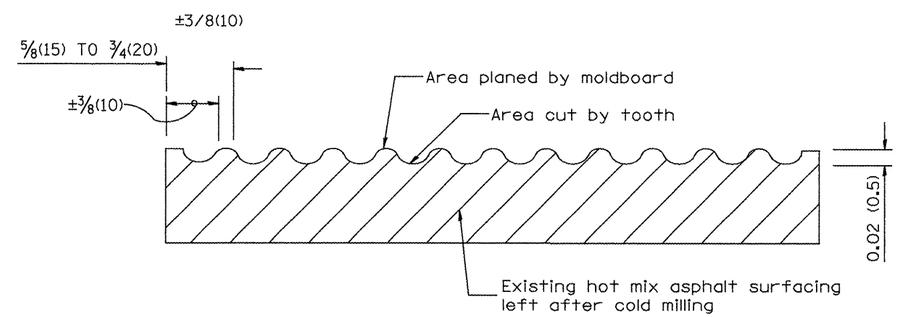

SECTION B-B PROJECTED
PERPENDICULAR TO CENTERLINE

DESIGNER NOTES:
1. INCLUDE DISTRICT SPECIAL PROVISION, IF APPLICABLE.

All dimensions are in inches (millimeters) unless otherwise noted.

01-01-97	RENUM. C-104.01, NEW REVISION BOX	T.P.
04-20-98	REMOVED MILLING DETAIL FROM STANDARD	J.A.
09-08-98	CORRECT NOTE LEADER PLACEMENT	R.W.
10-16-06	REVISED TO 2007 SPEC.	M.A.

STATE OF ILLINOIS
DEPARTMENT OF TRANSPORTATION

HOT MIX ASPHALT SURFACE REMOVAL (COLD MILLING)

NOT TO SCALE

CADD STD. 440001-D4

F.A.P 317	SECTION	COUNTY	TOTAL SHEETS	SHEET NO.
US24	(137,102)RS-4; 101RS-3		56	47
		CONTRACT NO. 68337		

FED. ROAD DIST. NO. | ILLINOIS | FED. AID PROJECT

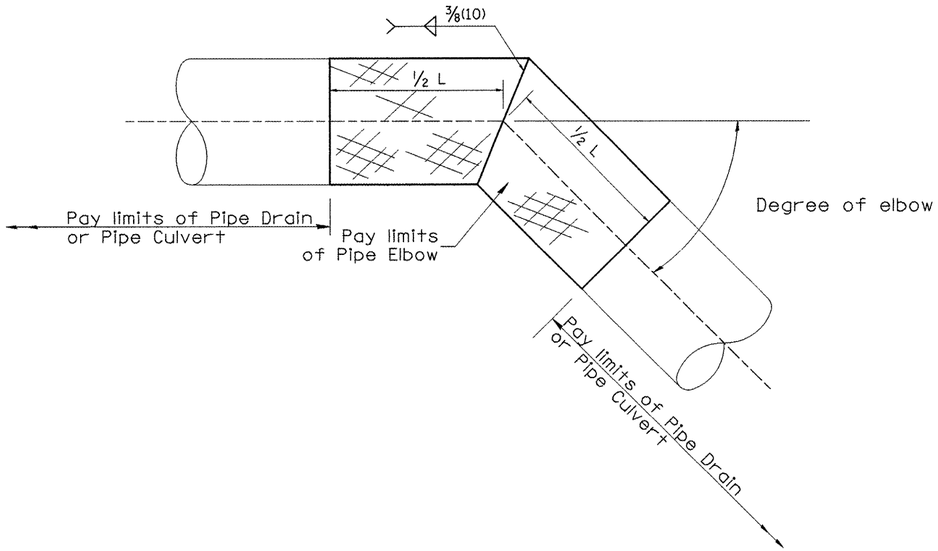

TABLE A		
ELBOW DESIGN CONTROLS		
PIPE DIAMETER	L = Pay limits of Pipe Elbow and minimum length of pipe required for fabrication	
	DEGREE OF ELBOW ≤ 45°	DEGREE OF ELBOW ≥ 46°
12(300)	24(600)	4'(1.22M)
15(375)	24(600)	4'(1.22M)
18(450)	24(600)	4'(1.22M)
21(525)	24(600)	4'(1.22M)
24(600)	4'(1.22M)	4'(1.22M)
30(750)	4'(1.22M)	6'(1.83M)
36(900)	4'(1.22M)	6'(1.83M)

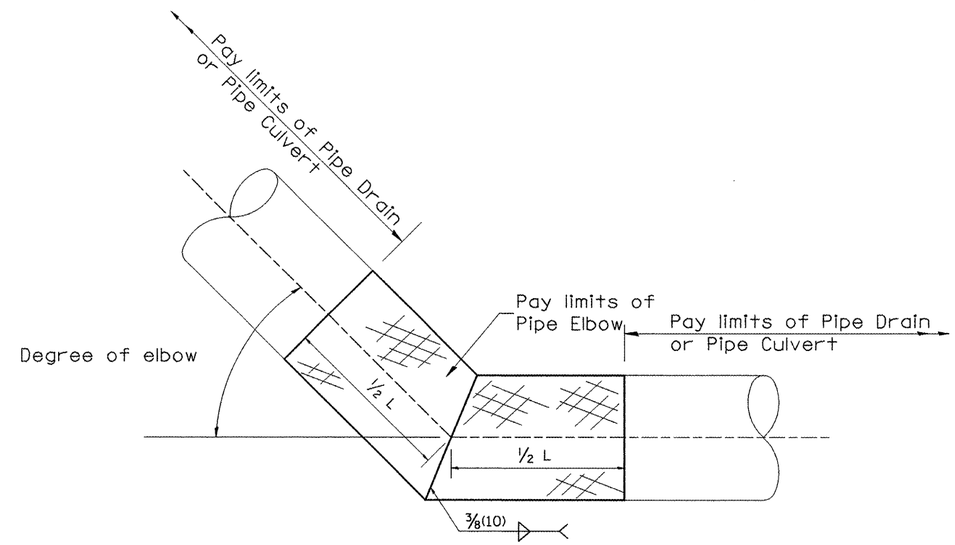

TABLE B	
ELBOW DESIGN CONTROLS	
EARTH SLOPE (V:H)	DEGREE OF ELBOW *
1:6	9°
1:4	14°
1:3	18°
1:2	26°
1:1 1/2	33°

* Approximate - based upon 0.5% inlet and outlet flowlines.

All dimensions are in inches (millimeters) unless otherwise noted.

DESIGNER NOTES: 1. Use with District CADD Standards: Slope Drains, Buried Pipe and/or Slope Drains - Exposed Pipe

01-01-97	RENUM. J-11.05, NEW REVISION BOX,	T.P.	
	REVISED TITLE BOX		
10-16-06	REVISED TO 2007 SPEC.	M.A.	

STATE OF ILLINOIS
DEPARTMENT OF TRANSPORTATION

PIPE ELBOW

NOT TO SCALE

CADD STD. 601301-D4

F.A.P 317	SECTION	COUNTY	TOTAL SHEETS	SHEET NO.
US24	(137,102)RS-4; 101RS-3	FULTON	56	48
		CONTRACT NO. 68337		
FED. ROAD DIST. NO.	ILLINOIS	FED. AID PROJECT		

DESIGNER NOTES:

1. Use EROSION CONTROL CURB at guardrail installations where grades are equal to or greater than 1% and at inlets. [Include District Special Provision]
2. Use GUARDRAIL AGGREGATE EROSION CONTROL at guardrail installations where grades are less than 1% [Include District Special Provision]
3. Include State Standards 609001, 609006 or 610001 if applicable.
4. Include the following District Cadd Standards as needed: Slope Drains for Exposed Pipes; Slope Drains for Buried Pipes; Seepage Collars for Buried Pipes; Seepage Collars for Exposed Pipes; Concrete Thrust Blocks and Pipe Elbow.
5. Include District Special Provision -"Aggregate Quality" for projects located in the Western Area of the District - approx. dividing line is IL 97.

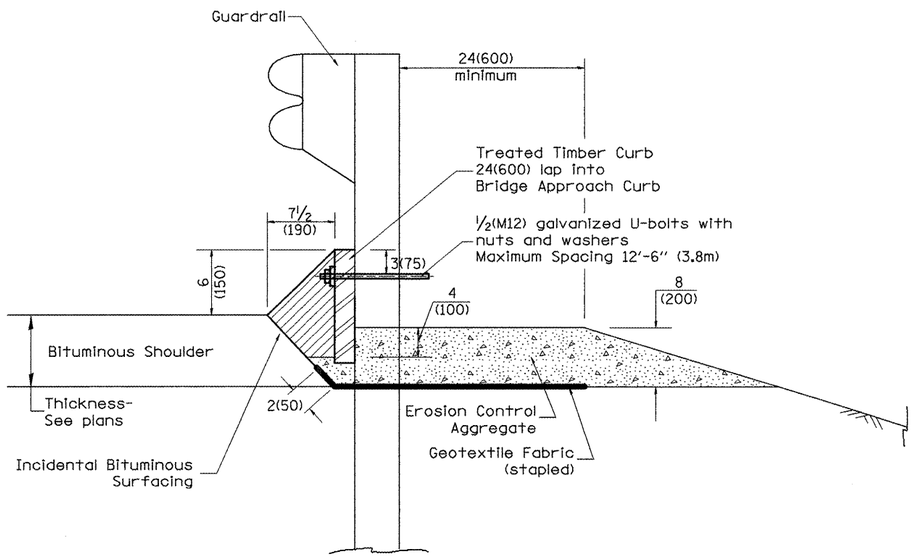

TYPICAL SECTION WITH EROSION CONTROL CURB

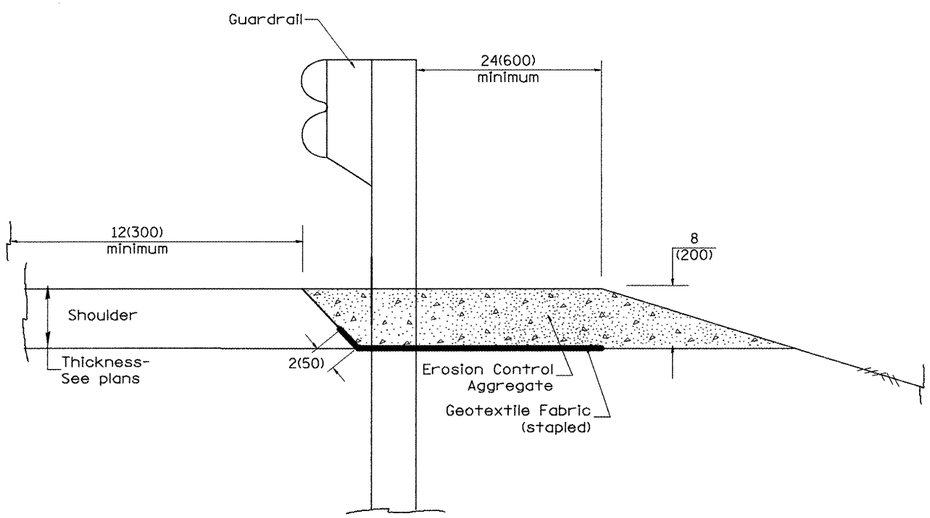

TYPICAL SECTION WITHOUT EROSION CONTROL CURB

GENERAL NOTES: EROSION CONTROL CURB

1. This work shall consist of grading as needed, installing hardware and treated timber boards, furnishing and placing mastic material and incidental bituminous surfacing in front of Steel Plate Beam Guardrail in accordance with Plan Details.

2. Timber shall be treated in accordance with Article 1007.12. All preservatives specified in the article will be allowed. Waterborne preservatives "asa" and "cca" shall have a minimum retention of 0.40 lbs./cu. ft. (6.4 kg/m³)

GENERAL NOTES: GUARDRAIL AGGREGATE EROSION CONTROL

1. This work shall consist of grading as needed, furnishing and installing geotextile fabric and staples, and furnishing, placing and shaping crushed aggregate around and behind Steel Plate Beam Guardrail posts in accordance with Plan Details.

2. Before placing the aggregate and the Geotextile Fabric, weeds and grass shall be removed from the area to be covered.

3. After the area has been prepared, and in a dry condition, the Geotextile fabric shall be placed with a 12(300) minimum overlap. A knife cut for guardrail post installation is necessary.

4. The aggregate shall be deposited, compacted and shaped by either mechanical or hand methods, in a manner reasonably true to line and grade.

5. The Contractor shall have the option of placing the guardrail before or after the Geotextile Fabric and Aggregate are in place. If the guardrail is placed after the Geotextile Fabric and Aggregate, then any voids must be filled and the aggregate returned to line and grade.

6. Materials shall meet the following requirements:

A. The crushed aggregate shall be CA1 gradation in accordance with Article 1004.01(c) of the Standard Specifications.

B. The Geotextile Fabric shall be nonwoven fabric in accordance with Article 1080.02 of the Standard Specifications.

All dimensions are in inches (millimeters) unless otherwise noted.

01-01-97	RENUM. C-22.01, NEW REVISION BOX	T.P.
03-01-97	CORRECT STD. NUMBERS IN NOTES PG. 2	J.A.
11-03-00	CORRECTION TO NOTES	M.A.
10-16-06	REVISED TO 2007 SPEC.	M.A.

STATE OF ILLINOIS
DEPARTMENT OF TRANSPORTATION

GUARDRAIL EROSION CONTROL TREATMENTS

NOT TO SCALE

SHT. 1 OF 2
CADD STD. 630101-D4

F.A.P 317	SECTION	COUNTY	TOTAL SHEETS	SHEET NO.
US24	(137,102)RS-4; 101RS-3	FULTON	56	49
		CONTRACT NO. 68337		

FED. ROAD DIST. NO. | ILLINOIS | FED. AID PROJECT

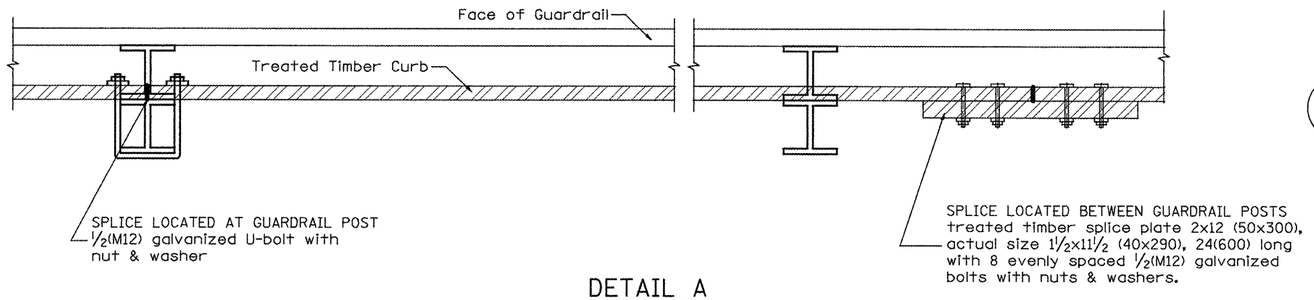

DETAIL A

(Typical Treated Timber Splices)

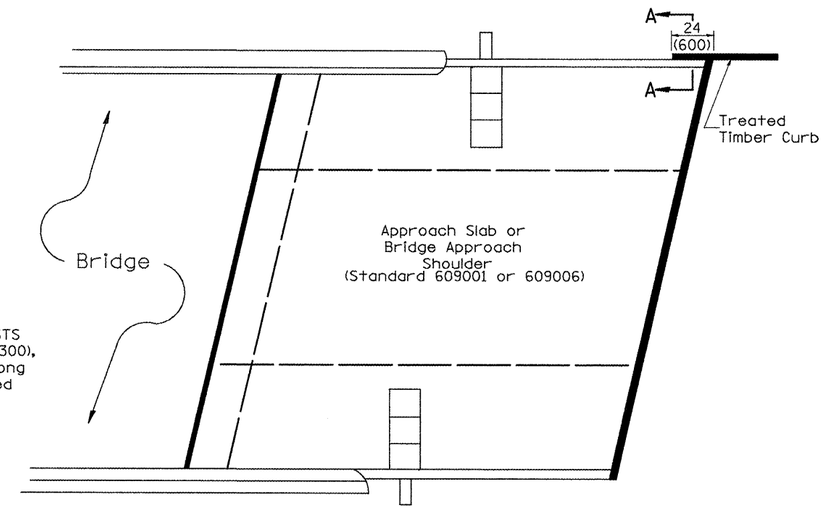

PLAN VIEW

APPROACH SLAB OR BRIDGE APPROACH SHOULDER
(STANDARD 609001 or 609006)

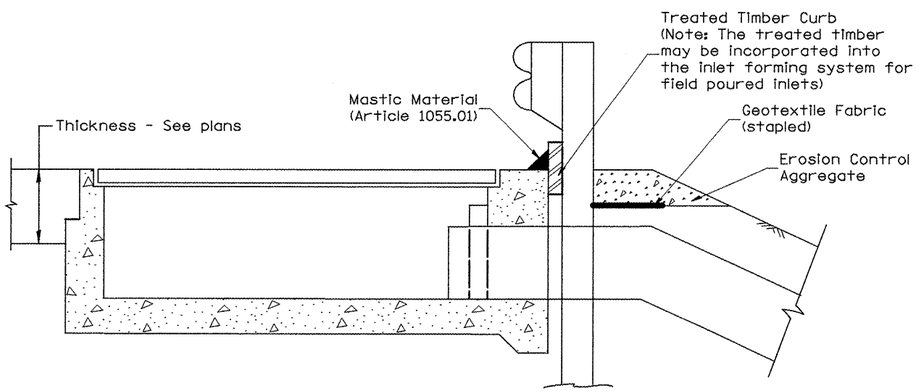

TYPICAL SECTION WITH EROSION CONTROL CURB
AT INLETS TYPE E & F (STANDARD 610001)

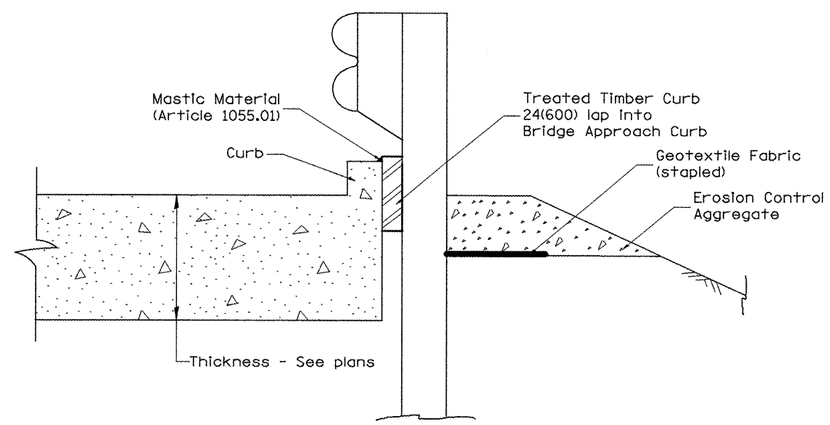

SECTION A-A

TYPICAL SECTION WITH EROSION CONTROL CURB
AT BRIDGE APPROACH CURB
(STANDARD 609001 OR 609006)

All dimensions are in inches (millimeters)
unless otherwise noted.

STATE OF ILLINOIS
DEPARTMENT OF TRANSPORTATION

GUARDRAIL EROSION CONTROL TREATMENTS

NOT TO SCALE

SHT. 2 OF 2
CADD STD. 630101-D4

F.A.P 317.	SECTION	COUNTY	TOTAL SHEETS	SHEET NO.
US24	(137,102)RS-4; 101RS-3	FULTON	56	50
		CONTRACT NO. 68337		
FED. ROAD DIST. NO.	ILLINOIS	FED. AID PROJECT		

DESIGNER NOTES:

1. INCLUDE APPROPRIATE SPECIAL PROVISIONS FOR "GUARD RAIL DELINEATION POLICY, 1. TERMINAL MARKER, 2. TERMINAL MARK POST, AND 3. GUARDRAIL AND BARRIER WALL MARKERS." FROM INTERIM SPECIAL PROVISIONS 94-74; "GUARDRAIL AND BARRIER WALL DELINEATION."
2. IF POST MOUNT TERMINAL MARKER IS USED, INCLUDE STATE STD. 72001I.

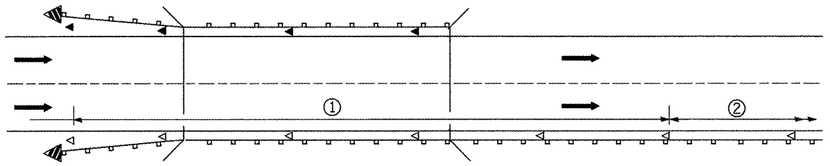

① Spacing 80 ft. (24 m) max. for first 400 ft. (122 m) or curve spacing shown in Standard 635001, whichever is less (min. 4 reflectors regardless of length).

② After 400 ft. (122 m), transition to normal delineator spacing shown in Standard 635001, and continue as required.

ONE-WAY TRAFFIC

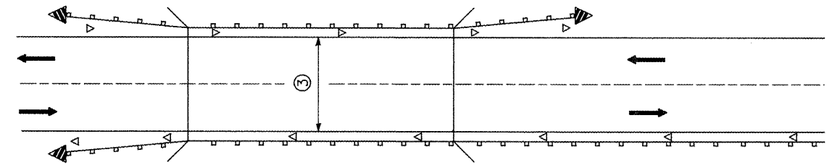

③ Bidirectional silver/silver should be used in lieu of monodirectional silver on both sides of two-lane bridges where the bridge pavement is less than 24 (610) wider than the pavement approaching the bridge.

TWO-WAY TRAFFIC

GUARDRAIL / BARRIER WALL / BRIDGE RAIL REFLECTORS

LEGEND

- Monodirectional silver
- Monodirectional amber
- Terminal Marker - Black/Yellow Left or Right as appropriate

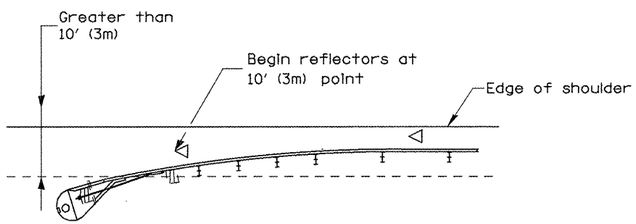

NOTE: Omit terminal marker when terminal over 10′ (3m) from edge of paved shoulder or break point of unpaved shoulder, or when terminal buried in backslope.

Traffic Barrier Terminal Type(*) and/or Turned-Down Terminal

[Terminal over 10′ (3m) from edge of shoulder]
*See Plans for Type

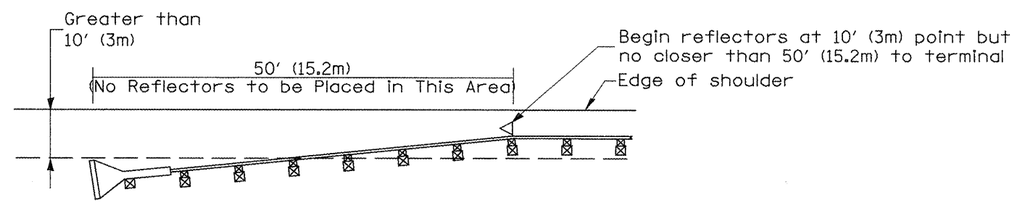

NOTE: Omit terminal marker when terminal over (10′) from edge of paved shoulder or break point of unpaved shoulder.

Traffic Barrier Terminal Type 1 (Special)
[Terminal over 10′ (3m) from edge of shoulder]

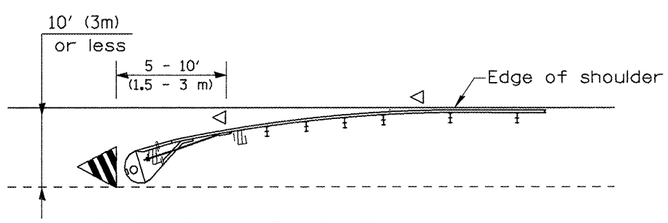

Traffic Barrier Terminal Type(*) and/or Turned-Down Terminal

[Terminal over 10′ (3m) or less from edge of shoulder]
*See Plans for Type

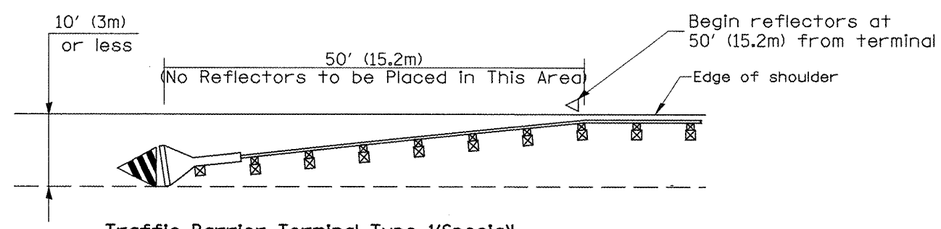

Traffic Barrier Terminal Type 1(Special)
[Terminal 10′ (3m) or less from edge of shoulder]

TERMINAL MARKER PLACEMENT

All dimensions are in inches (millimeters) unless otherwise noted.

01-01-97	RENUM. E-10.02, NEW REVISION BOX	T.P.
03-01-97	CORRECT STD. SPEC. *	J.A.
10-16-06	REVISED TO 2007 SPEC.	M.A.

STATE OF ILLINOIS
DEPARTMENT OF TRANSPORTATION

GUARDRAIL AND BARRIER WALL DELINEATION

NOT TO SCALE

SHT. 1 OF 3
CADD STD. 635101-D4

F.A.P 317	SECTION	COUNTY	TOTAL SHEETS	SHEET NO.
US24	(137,102)RS-4; 101RS-3	FULTON	56	51
		CONTRACT NO. 68337		

FED. ROAD DIST. NO. | ILLINOIS | FED. AID PROJECT

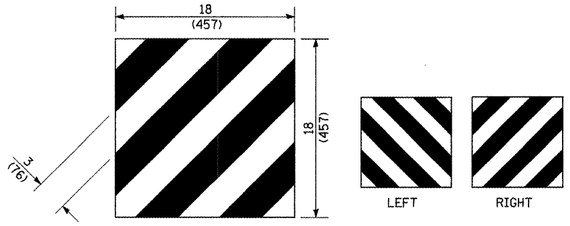

For Traffic Barrier Terminal Type 1 (Special)

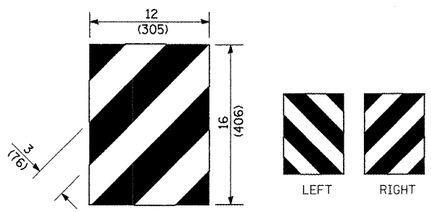

For Traffic Barrier Terminal Type (*)
and Post Mount
* See Plans for Type

TERMINAL MARKER DETAILS

Color: Black / Yellow reflectorized

OM - I100 (L or R) Direct applied reflective sheeting

OM - I200 (L or R) Post mounted

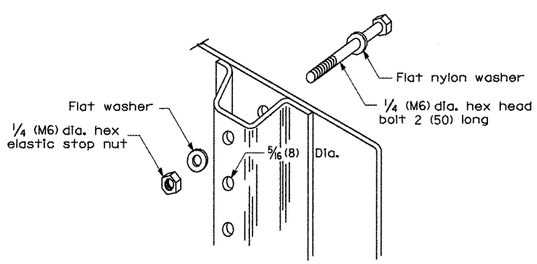

DETAIL OF MOUNTING TERMINAL MARKER TO POST

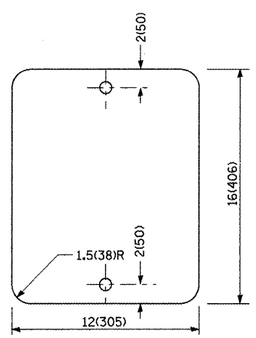

STANDARD TERMINAL MARKER

POST MOUNTED TERMINAL MARKER ASSEMBLY

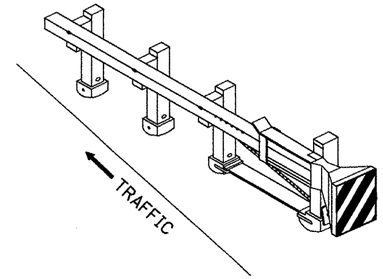

Standard Treatment - Direct Applied Sheeting
Traffic Barrier Terminal Type 1 (Special)

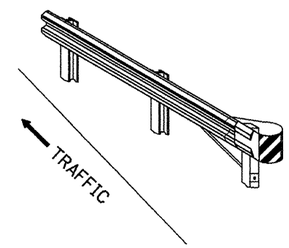

Standard Treatment - Direct Applied Sheeting
Traffic Barrier Terminal Type (*)
* See Plans for Type

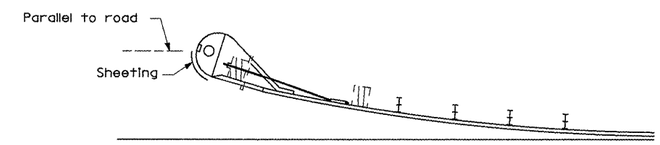

Sheeting Position for
Traffic Barrier Terminal Type (*)
* See Plans for Type

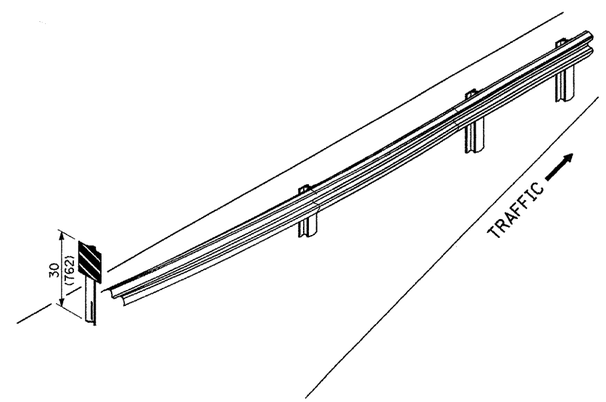

ALTERNATE TREATMENT - POST MOUNTED
(For turned-down terminal where sheeting cannot be direct applied)

TERMINAL MARKER TREATMENTS

GENERAL NOTES

All dimensions are in inches (millimeters) unless otherwise noted.

STATE OF ILLINOIS
DEPARTMENT OF TRANSPORTATION

GUARDRAIL AND BARRIER WALL DELINEATION

NOT TO SCALE

SHT. 2 OF 3

CADD STD. 635101-D4

F.A.P 317	SECTION	COUNTY	TOTAL SHEETS	SHEET NO.
US24	(137,102)RS-4; 101RS-3	FULTON	56	52
		CONTRACT NO. 68337		
FED. ROAD DIST. NO.	ILLINOIS	FED. AID PROJECT		

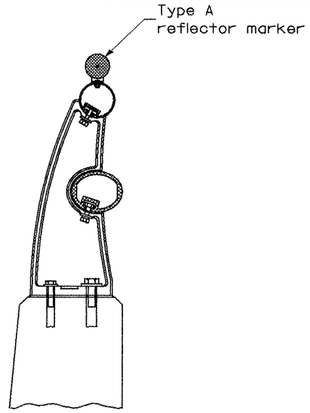

TYPICAL MOUNTING DETAIL
FOR BRIDGE RAIL REFLECTOR

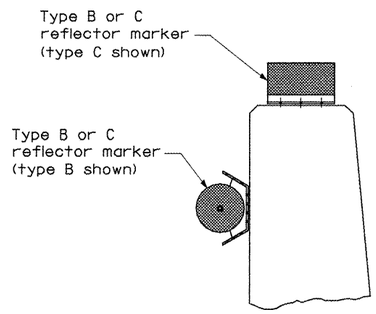

TYPICAL MOUNTING DETAIL
FOR BARRIER WALL REFLECTOR

REFLECTOR MOUNTING

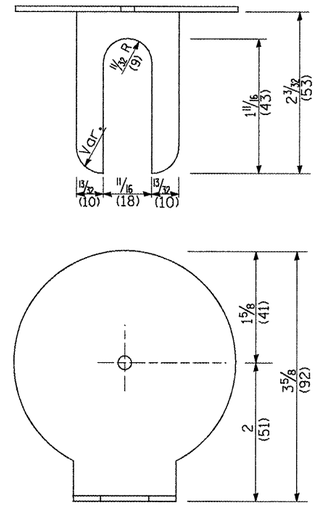

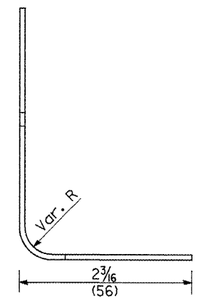

REFLECTOR MARKER TYPE A

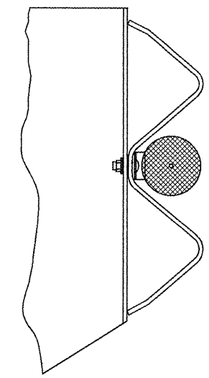

TYPICAL GUARDRAIL MOUNTING WITH
REFLECTOR MARKER TYPE A

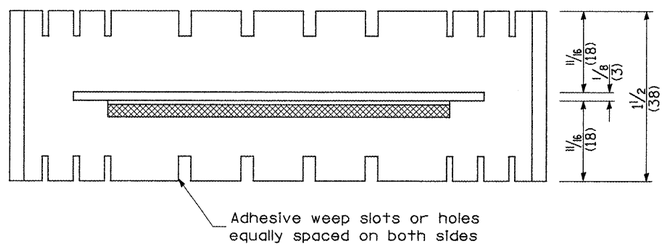

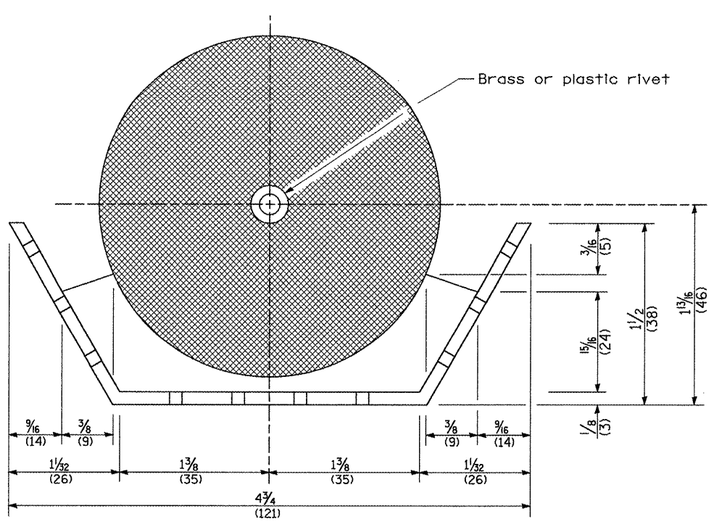

REFLECTOR MARKER TYPE B

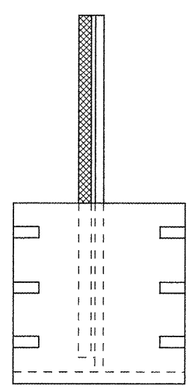

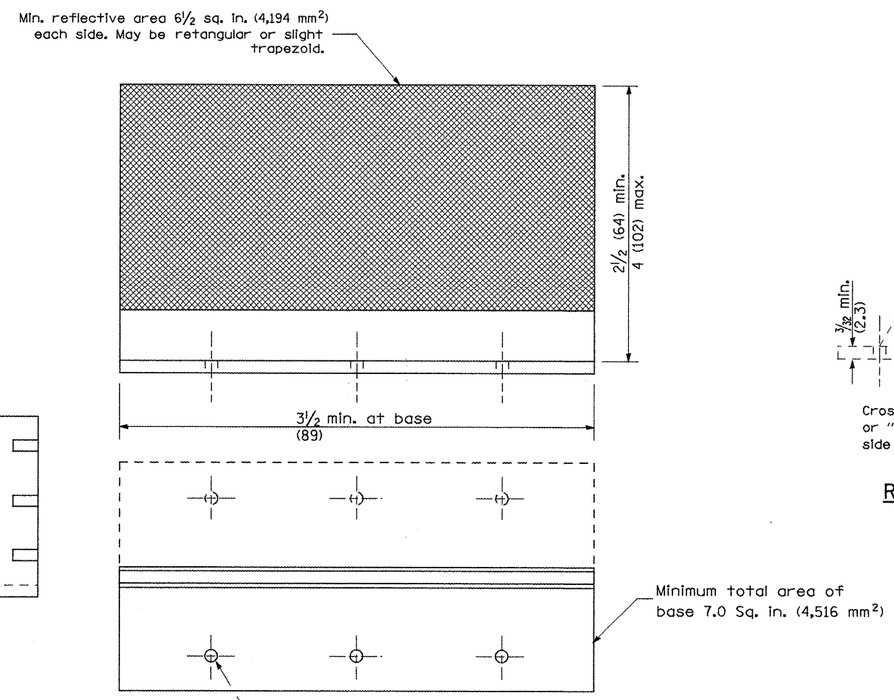

REFLECTOR MARKER TYPE C

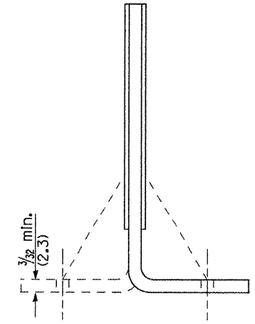

Cross section may be "T"
or "L" shaped and may have
side supports at ends.

REFLECTORS

All dimensions are in inches (millimeters)
unless otherwise noted.

STATE OF ILLINOIS DEPARTMENT OF TRANSPORTATION	GUARDRAIL AND BARRIER WALL DELINEATION	F.A.P 317	SECTION	COUNTY	TOTAL SHEETS / SHEET NO.
		US24	(137,102)RS-4; 101RS-3	FULTON	56 / 53
	NOT TO SCALE — SHT. 3 OF 3 — CADD STD. 635101-D4	FED. ROAD DIST. NO.	ILLINOIS	FED. AID PROJECT	CONTRACT NO. 68337

PERMANENT SURVEY TIES

○ Permanent Survey Tie
□ Section Corner, 1/4 Corner, or other land corner.

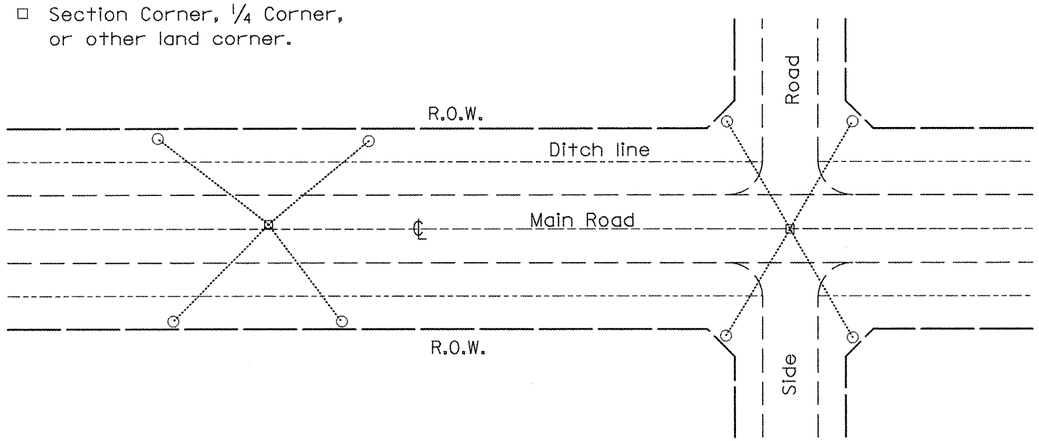

TYPICAL APPLICATION

GENERAL NOTES

1. The marker shall be cast in place of Class SI Concrete.
2. Tie marker shall be installed after the final seeding has been completed unless otherwise specified by the Engineer.
3. The tie distances to the section corner shall be measured and recorded by the IDOT Chief of Surveys.

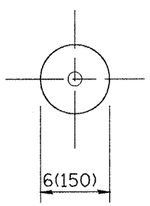

PLAN

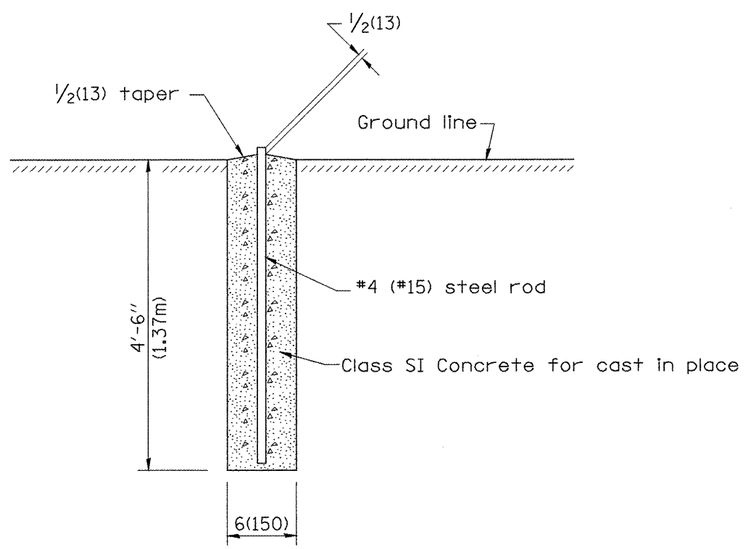

SECTION

PERMANENT SURVEY MARKERS

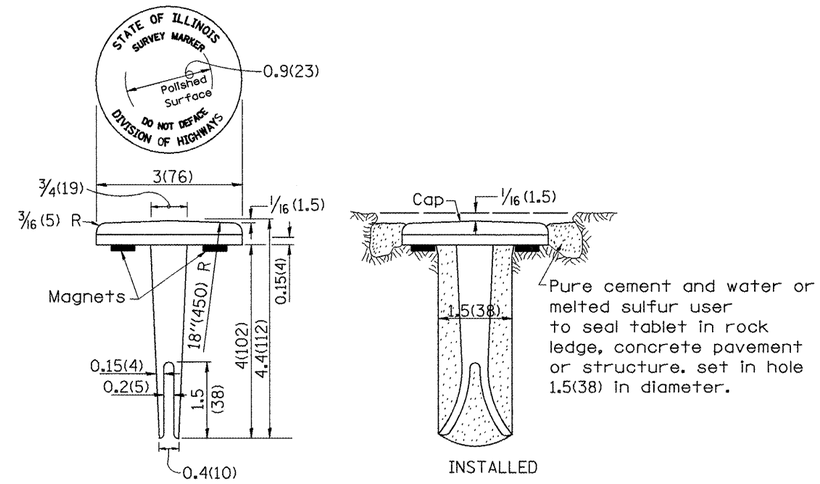

BRONZE TABLET - No Scale
TYPE I

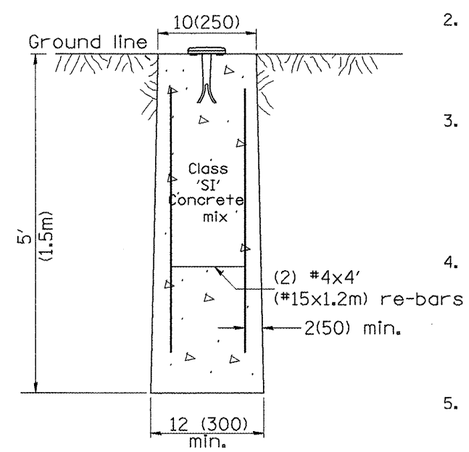

MARKER CAST IN PLACE
TYPE II

GENERAL NOTES

1. All type II markers shall be cast in place, and precast markers will not be allowed.
2. Two permanent magnets, each having a diameter of 3/4 (19) and a thickness of 1/4 (6), or equivalent, shall beattached to the underside of the tablet with an approved epoxy bonding agent.
3. The location of the markers shall be in accordance with the plans in general, the markers will be placed at the P.T.'s and P.C.'s of horizontal curves and spaces along the tangents in a way that a minimum of two markers are alway inter-visible, and not to exceed 1000' (300m).
4. The markers shall be placed under the direction of the Engineer and shall be installed in a workmanlike manner in order that there will be no further settlement or horizontal shifting. The monuments shall be placed in a way that the survey point will fall within the portion of the plaque provided for that purpose.
5. The project designation, the centerline station, the survey point, and the elevation shall be permanently marked by the use of metal dies after marker has been installed.

DESIGNER NOTES:
1. ADD DISTRICT SPECIAL PROVISION.
2. MODIFIES STATE STD 667101 TO CALL FOR "BRONZE" TABLET.

All dimensions are in inches (millimeters) unless otherwise noted.

01-01-97	RENUM. D-3.01, NEW REVISION BOX, REVISED	T.P.	10-16-06	REVISED TO 2007 SPEC.	M.A.
	TITLE BOX, ADD DESIGNER NOTE				
07-07-98	ADD DESIGNER NOTE	J.A.			
05-24-06	REMOVED GEN. NOTE UNDER TIES	M.A.			

STATE OF ILLINOIS
DEPARTMENT OF TRANSPORTATION

PERMANENT SURVEY TIE &
PERMANENT SURVEY MARKERS TY.I - TY.II

NOT TO SCALE — CADD STD. 667101-D4

F.A.P. 31T	SECTION	COUNTY	TOTAL SHEETS	SHEET NO.
US24	(137,102)RS-4; 101RS-3	FULTON	56	54
		CONTRACT NO. 68337		

FED. ROAD DIST. NO. | ILLINOIS | FED. AID PROJECT

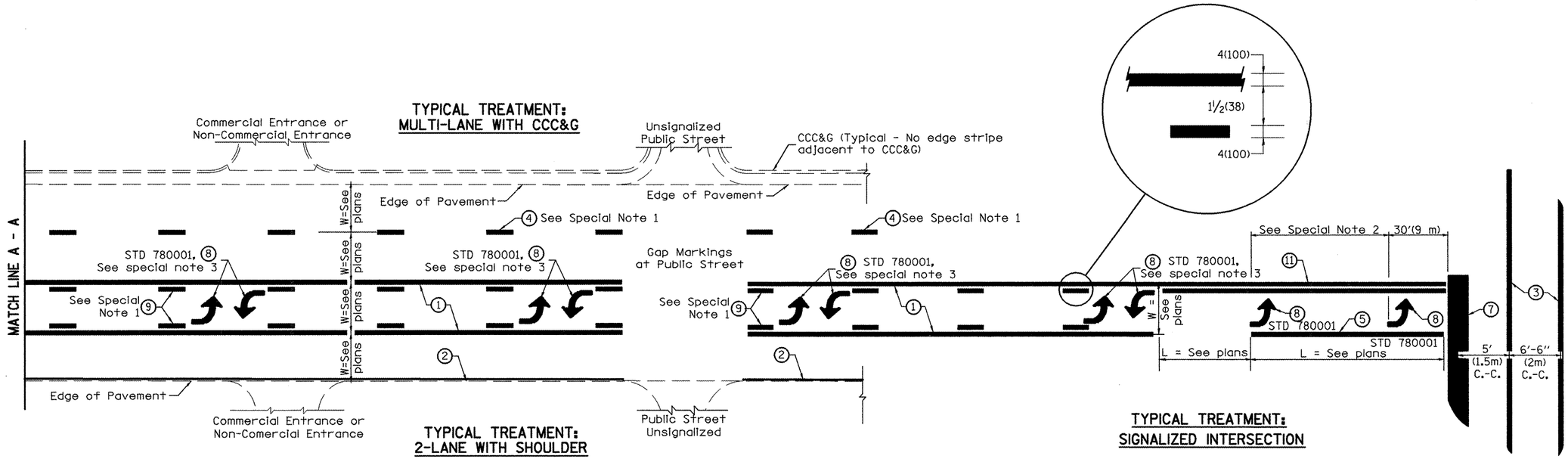

FLUSH PAVED MEDIAN: TWO-WAY LEFT TURN LANE WITH ONE-WAY LEFT TURN LANE AT SIGNALIZED INTERSECTION

TYPICAL PAVEMENT MARKING LEGEND

(Note: This is a District Standard Legend. Some elements may not apply to specific project.)

1. 4(100) Solid (Yellow)
2. 4(100) Solid (White)
3. 2-6(150) Crosswalk @ 6'-6" (2m)min C.-C. (White)
   2-8(200) Crosswalk @ 6'-6" (2m)min C.-C. (White) (When traffic signals are present.)
4. 6(150) Skip-Dash (White) — 10' (3.05m) / 30' (9.14m) / 10' (3.05m) (See Special Note 1)
5. 8(200) Solid (White)
6. 12(300) Diagonal (White) (Item 6 is shown on Std. 780001)
7. 24(600) Stop Bar (White)
8. Letters & Arrows — 33' (10m) (See Std. 780001 and Special Notes 2 & 3)
9. 4(100) Skip-Dash (Yellow) — 10' (3.05m) / 30' (9.14m) / 10' (3.05m) (See Special Note 1)
10. 12(300) Diagonal (Yellow) (See Table A)
11. 4(100) Double Solid (Yellow) — 11(280) C.-C. — See Table A

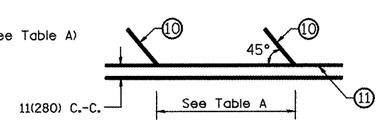

SPECIAL NOTES

1. Skip-Dash markings will be centered between both ends of city blocks and shall be placed in alignment transversly across the pavement.
2. The following shall apply to arrows located in one-way left turn lanes:
   A. A minimum of two (2) arrows is required.
   B. The maximum spacing between arrows is 80' (24 m).
   C. Arrows shall be evenly spaced if three (3) or more are required.
3. The following shall apply to arrow pairs located in two-way left turn lanes:
   A. A minimum of two (2) arrow pairs is required.
   B. The maximum spacing between arrow pairs is 200' (61 m).
   C. Arrow pairs shall be evenly spaced if three (3) or more are required.
   D. The spacing between Bi Directional Left Turn Arrows is 33' (10 m).

GENERAL NOTES

1. Refer to State Standard 780001 for additional Pavement Markings including letters & arrows.
2. See Plans for Pavement Markings adjacent to curbed islands and medians, and through lane reductions.

DESIGNER NOTES:
1. Include State Standard 780001 (Typical Pavement Markings)

01-01-97	RENUM. F-8.03, NEW REVISION BOX	T.P.	10-16-06	REVISED TO 2007 SPEC.	
02-07-97	ADD BI DIRECTIONAL DIMENSION	J.A.			
10-97	CORRECT BI DIRECTIONAL DIMENSION	J.A.			
08-02	ADD CROSSWALK DMNS. WITH T.S.	M.A.			

STATE OF ILLINOIS
DEPARTMENT OF TRANSPORTATION

TYPICAL PAVEMENT MARKINGS

NOT TO SCALE — SHT. 1 OF 2 — CADD STD. 780001-D4

F.A.P 317	SECTION	COUNTY	TOTAL SHEETS	SHEET NO.
US24	(137,102)RS-4; 101RS-3	FULTON	56	55
		CONTRACT NO. 68337		
FED. ROAD DIST. NO.	ILLINOIS	FED. AID PROJECT		

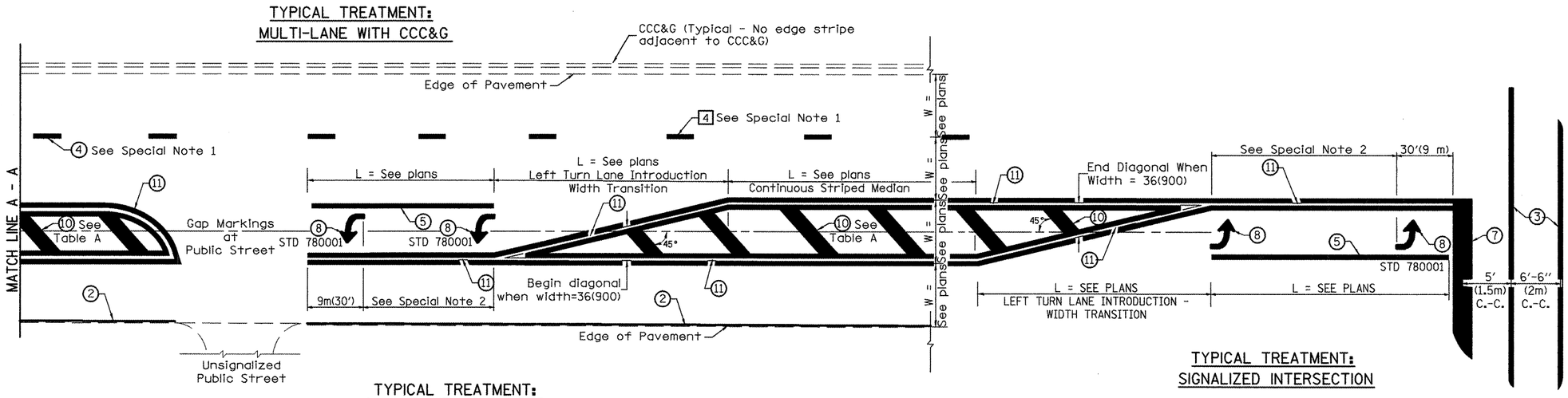

TYPICAL TREATMENT:
2-LANE WITH SHOULDER

TYPICAL MEDIAN TRANSITIONS

TYPICAL TREATMENT:
SIGNALIZED INTERSECTION

FLUSH PAVED MEDIAN: RESTRICTED LEFT TURN LANE

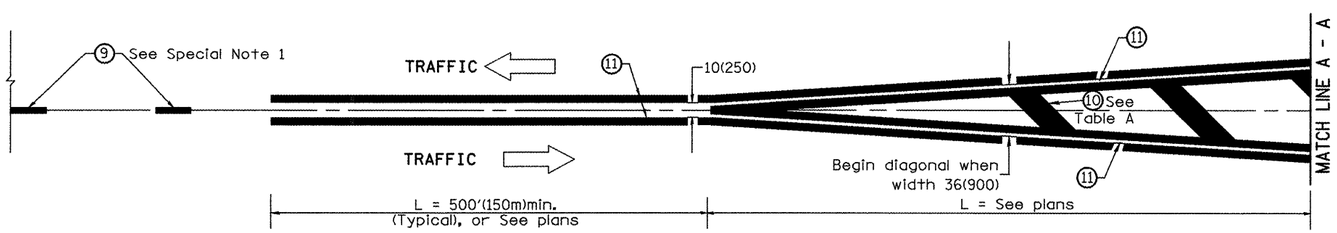

MEDIAN INTRODUCTION - WIDTH TRANSITIONS

TABLE A

RECOMMENDED SPACING BETWEEN DIAGONAL LINES

SPEED LIMIT RANGE	CONTINUOUS	INTERSECTION CHANNELIZATION (Includes Width Transitions for Median and Left Turn Lane Introductions)
Less Than 30 mph (50 km/h)	50' (15m)	15' (5m)
30 - 45 mph (50 - 70 km/h)	75' (23m)	20' (6m)
Over 45 mph (70 km/h)	150' (46m)	30' (9m)

All dimensions are in inches (millimeters) unless otherwise noted.

STATE OF ILLINOIS
DEPARTMENT OF TRANSPORTATION

TYPICAL PAVEMENT MARKINGS

NOT TO SCALE

SHT. 2 OF 2
CADD STD. 780001-D4

F.A.P 317	SECTION	COUNTY	TOTAL SHEETS	SHEET NO.
US24	(137,102)RS-4; 101RS-3	FULTON	56	56
		CONTRACT NO. 68337		
FED. ROAD DIST. NO.	ILLINOIS	FED. AID PROJECT		